US010762187B2

(12) **United States Patent**
Martinez de Velasco Cortina et al.

(10) **Patent No.: US 10,762,187 B2**
(45) **Date of Patent: *Sep. 1, 2020**

(54) **SYSTEM AND METHOD FOR PROVIDING SECURE TRANSACTIONAL SOLUTIONS**

(71) Applicant: **Neology, Inc.**, Poway, CA (US)

(72) Inventors: **Francisco Martinez de Velasco Cortina**, La Jolla, CA (US); **Manfred Rietzler**, Marktoberdorf (DE)

(73) Assignee: **NEOLOGY, INC.**, San Diego, CA (US)

(*) Notice: Subject to any disclaimer, the term of this patent is extended or adjusted under 35 U.S.C. 154(b) by 533 days.

This patent is subject to a terminal disclaimer.

(21) Appl. No.: **14/659,502**

(22) Filed: **Mar. 16, 2015**

(65) **Prior Publication Data**

US 2015/0193766 A1 Jul. 9, 2015

Related U.S. Application Data

(63) Continuation of application No. 14/585,057, filed on Dec. 29, 2014, which is a continuation of application

(Continued)

(51) **Int. Cl.**
G06F 21/35 (2013.01)
H04W 4/80 (2018.01)

(Continued)

(52) **U.S. Cl.**
CPC ***G06F 21/35*** (2013.01); ***G06F 21/31*** (2013.01); ***G06F 21/32*** (2013.01); ***G06F 21/34*** (2013.01); ***G06K 7/0008*** (2013.01); ***G06K 7/10*** (2013.01); ***G06K 7/10316*** (2013.01); ***G06K 7/10366*** (2013.01); ***G06K 19/025*** (2013.01); ***G06K 19/0723*** (2013.01); ***G06K 19/0776*** (2013.01);

(Continued)

(58) **Field of Classification Search**
None
See application file for complete search history.

(56) **References Cited**

U.S. PATENT DOCUMENTS

4,529,870 A 7/1985 Chaum
5,552,789 A 9/1996 Schuermann

(Continued)

FOREIGN PATENT DOCUMENTS

DE 19608757 A1 9/1997
DE 10042805 A1 3/2002

(Continued)

OTHER PUBLICATIONS

RFID Handbook—Active Load Modulation.*

(Continued)

Primary Examiner — Neha Patel
Assistant Examiner — El Mehdi Oussir
(74) *Attorney, Agent, or Firm* — Procopio, Cory, Hargreaves & Savitch LLP

(57) **ABSTRACT**

The present invention provides a method and system for verifying and tracking transactional information. In an embodiment of the invention, a system for delivering security solutions is provided that includes at least one of the following: a radio frequency (RF) identification device, an identification mechanism (e.g., a card, sticker), and an RF reader.

21 Claims, 24 Drawing Sheets

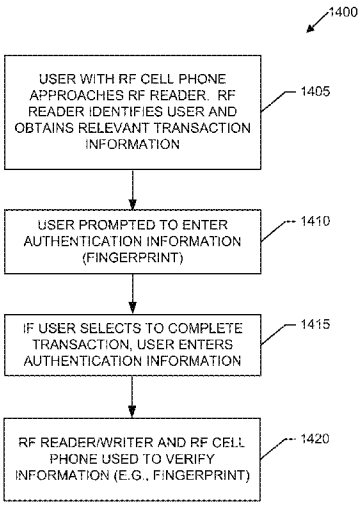

Related U.S. Application Data

No. 14/028,469, filed on Sep. 16, 2013, now Pat. No. 8,933,807, which is a continuation of application No. 13/350,665, filed on Jan. 13, 2012, now Pat. No. 8,587,436, which is a continuation of application No. 13/175,768, filed on Jul. 1, 2011, now Pat. No. 8,237,568, which is a continuation of application No. 12/688,666, filed on Jan. 15, 2010, now Pat. No. 8,004,410, which is a continuation of application No. 11/279,912, filed on Apr. 17, 2006, now Pat. No. 7,671,746, which is a continuation of application No. 10/615,026, filed on Jul. 9, 2003, now Pat. No. 7,081,819.

(60) Provisional application No. 60/394,241, filed on Jul. 9, 2002.

(51) **Int. Cl.**

G06F 21/34	(2013.01)
G06F 21/32	(2013.01)
G06F 21/31	(2013.01)
G06K 7/00	(2006.01)
G06K 19/07	(2006.01)
G06K 19/077	(2006.01)
G06K 19/10	(2006.01)
G07C 9/00	(2020.01)
H04W 12/06	(2009.01)
H04W 12/08	(2009.01)
G06K 7/10	(2006.01)
G06K 19/02	(2006.01)
H04L 29/06	(2006.01)
H04W 12/00	(2009.01)

(52) **U.S. Cl.**

CPC . ***G06K 19/07758*** (2013.01); ***G06K 19/07764*** (2013.01); ***G06K 19/10*** (2013.01); ***G07C 9/00087*** (2013.01); ***H04W 4/80*** (2018.02); ***H04W 12/06*** (2013.01); ***H04W 12/08*** (2013.01); *G06Q 2220/00* (2013.01); *H04L 63/0861* (2013.01); *H04M 2203/6009* (2013.01); *H04M 2203/6054* (2013.01); *H04W 12/00522* (2019.01)

(56) **References Cited**

U.S. PATENT DOCUMENTS

5,590,197 A * 12/1996 Chen G06Q 20/04 380/30
5,627,544 A 5/1997 Snodgrass et al.
5,657,008 A 8/1997 Bantli
5,742,618 A 4/1998 Lowe
5,787,174 A 7/1998 Tuttle
5,819,234 A 10/1998 Slavin et al.
5,864,580 A 1/1999 Lowe et al.
5,874,896 A 2/1999 Lowe et al.
5,940,006 A 8/1999 MacLellan et al.
5,974,500 A 10/1999 Maletsky et al.
6,025,780 A 2/2000 Bowers et al.
6,025,784 A 2/2000 Mish
6,052,068 A 4/2000 Price R et al.
6,073,840 A 6/2000 Marion et al.
6,089,284 A 7/2000 Kaehler et al.
6,098,879 A 8/2000 Terranova et al.
6,104,281 A 8/2000 Heinrich et al.
6,111,506 A 8/2000 Yap et al.
6,140,941 A 10/2000 Dwyer et al.
6,157,333 A 12/2000 Louagie et al.
6,163,771 A * 12/2000 Walker G06Q 20/04 705/18
6,167,333 A 12/2000 Gehlot et al.
6,175,922 B1 1/2001 Wang
6,182,894 B1 2/2001 Hackett et al.
6,203,952 B1 3/2001 O'Brien et al.
6,211,790 B1 4/2001 Radomsky et al.
6,268,796 B1 7/2001 Gnadinger et al.
6,269,292 B1 7/2001 Kokubu et al.
6,275,157 B1 8/2001 Mays et al.
6,276,607 B1 8/2001 Sato
6,334,059 B1 12/2001 Stilp et al.
6,340,116 B1 1/2002 Cecil et al.
6,360,208 B1 3/2002 Ohanian et al.
6,388,579 B1 5/2002 Adcox et al.
6,427,504 B1 8/2002 Janssen et al.
6,570,487 B1 5/2003 Steeves
6,570,488 B2 5/2003 Kucharczyk et al.
6,617,961 B1 9/2003 Janssen et al.
6,698,653 B1 3/2004 Diamond et al.
6,753,759 B2 6/2004 Stegmaier et al.
6,758,405 B2 7/2004 Look
6,793,134 B2 9/2004 Clark
6,848,048 B1 * 1/2005 Holmes G06F 21/64 713/162
6,850,147 B2 2/2005 Prokoski
6,894,615 B2 5/2005 Look
6,934,689 B1 * 8/2005 Ritter G06Q 20/04 705/16
6,934,861 B2 8/2005 Haala
6,950,013 B2 9/2005 Scaman et al.
6,975,834 B1 12/2005 Forster
7,031,946 B1 4/2006 Tamai et al.
7,080,819 B2 7/2006 Tojo
7,081,819 B2 7/2006 Martinez de Velasco Cortina et al.
7,096,363 B2 8/2006 Kon et al.
7,225,337 B2 5/2007 Baessler
7,310,734 B2 12/2007 Boate et al.
7,487,538 B2 2/2009 Mok
7,533,809 B1 5/2009 Robinson et al.
7,671,746 B2 3/2010 Martinez de Velasco Cortina et al.
7,844,505 B1 11/2010 Arneson et al.
7,911,643 B2 * 3/2011 Yamada H04N 1/33307 358/1.15
7,980,378 B2 7/2011 Jones et al.
7,987,501 B2 7/2011 Miller et al.
8,004,410 B2 8/2011 Martinez de Velasco Cortina et al.
8,041,815 B2 10/2011 Bahl et al.
8,126,449 B2 2/2012 Beenau et al.
8,237,568 B2 8/2012 Martinez de Velasco Cortina et al.
8,325,044 B2 12/2012 Martinez de Velasco Cortina et al.
8,401,539 B2 3/2013 Beenau et al.
8,548,927 B2 10/2013 Beenau et al.
8,587,436 B2 11/2013 Martinez de Velasco Cortina et al.
9,558,385 B2 1/2017 Martinez de Velasco Cortina et al.
9,858,566 B2 * 1/2018 Mardikar G06Q 20/1085
2002/0089434 A1 7/2002 Ghazarian
2002/0109580 A1 8/2002 Shreve et al.
2002/0112171 A1 * 8/2002 Ginter G06F 21/10 713/185
2002/0112177 A1 8/2002 Voltmer
2002/0123325 A1 * 9/2002 Cooper H04L 63/0492 455/411
2002/0157029 A1 * 10/2002 French G06F 21/31 726/21
2002/0193142 A1 * 12/2002 Stavenow G06F 21/41 455/556.1
2002/0194499 A1 * 12/2002 Audebert H04L 63/0853 726/35
2003/0018522 A1 * 1/2003 Denimarck G06Q 20/40145 705/14.23
2003/0019929 A1 1/2003 Stewart et al.
2003/0074317 A1 4/2003 Hofi
2003/0137403 A1 7/2003 Carrender et al.

(56) **References Cited**

U.S. PATENT DOCUMENTS

2003/0200227	A1	10/2003	Ressler	
2004/0128249	A1	7/2004	Hoffman	
2005/0149764	A1	7/2005	Bahl et al.	
2006/0020558	A1*	1/2006	Bonalle	G06Q 20/341 705/64
2006/0204048	A1*	9/2006	Morrison	G06F 21/31 382/115
2007/0022058	A1*	1/2007	Labrou	G06Q 20/32 705/67
2007/0198436	A1*	8/2007	Weiss	G06F 21/32 705/75
2010/0094754	A1	4/2010	Bertran et al.	
2010/0095130	A1	4/2010	Bertran et al.	

FOREIGN PATENT DOCUMENTS

EP	0977145	A2	2/2000
EP	0993999	A2	4/2000
JP	2002042076	A	2/2002
WO	9843104	A2	10/1998
WO	2004006165	A1	1/2004

OTHER PUBLICATIONS

Smart Card Technology Past Present and Future Mohammed 2004.*
Understanding the Requirements of ISO IEC 14443.*
Ewa Syta, S. K. (2010). RFID-based Authentication Middleware for Mobile Devices. IEEE, 1-10. Retrieved from http://www.cs.ccsu.edu/~stan/research/pervasive/pubs/hicss2010rfidam.pdf.*
Atmel, Atmel Smart Card ICs, Silicon solutions making smart cards smarter, 12 pages.
Extended European Search Report, European Patent Application No. 10182033.0, dated Jan. 13, 2012, 7 pages.
Fancher, Carol Hovenga. Motorola, Inc., In your pocket smartcards, IEEE Spectrum, Feb. 1997, 7 pages.
Rakers, et al. Secure Contactless Smartcard ASIC with DPA Protection, IEEE Journal of Solid-State Circuits, vol. 36, No. 36, Mar. 2001, 7 pages.
Japanese Office Action, Japanese Patent Application No. 2004-519130, dated May 12, 2009, 10 pages.
Anonymous, Read/write RFID offers standalone advantages, Security, Aug. 1996; 33, 8; ProQuest, 1 page.
Response to Office Action filed on May 2, 2017 for U.S. Appl. No. 15/372,317.
U.S. Office Action dated Feb. 2, 2017 received in U.S. Appl. No. 15/372,317.
Response to Office Action filed on Nov. 18, 2016 for U.S. Appl. No. 14/321,781.
U.S. Office Action dated May 19, 2016 received in U.S. Appl. No. 14/321,781.
Response to Office Action filed on Dec. 24, 2015 for U.S. Appl. No. 14/321,781.
U.S. Office Action dated Jun. 24, 2015 received in U.S. Appl. No. 14/321,781.
U.S. Notice of Allowance dated Jul. 11, 2014 received in U.S. Appl. No. 14/022,135.
Response to Office Action filed on Mar. 14, 2014 for U.S. Appl. No. 14/022,135.
U.S. Office Action dated Mar. 7, 2014 received in U.S. Appl. No. 14/022,135.
Response to Office Action filed on Feb. 3, 2014 for U.S. Appl. No. 14/022,135.
U.S. Office Action dated Dec. 5, 2013 received in U.S. Appl. No. 14/022,135.
Appeal Brief filed Feb. 9, 2017 for U.S. Appl. No. 14/585,057.
Pre-Brief Appeal Conference Decision dated Nov. 30, 2016 and received in U.S. Appl. No. 14/585,057.
Pre-Appeal Brief Request for Review, Notice of Appeal, and Pre-Brief Brief filed on Nov. 9, 2016 for U.S. Appl. No. 14/585,057.
U.S. Office Action dated May 9, 2016 received in U.S. Appl. No. 14/585,057.
Response to Office Action filed on Jan. 7, 2016 for U.S. Appl. No. 14/585,057.
U.S. Office Action dated Oct. 7, 2015 received in U.S. Appl. No. 14/585,057.
U.S. Notice of Allowance dated Dec. 3, 2014 received in U.S. Appl. No. 14/028,469.
Supplemental response to Office Action filed on Oct. 31, 2014 for U.S. Appl. No. 14/028,469.
Response to Office Action filed on Oct. 14, 2014 for U.S. Appl. No. 14/028,469.
U.S. Office Action dated Aug. 18, 2014 received in U.S. Appl. No. 14/028,469.
U.S. Office Action dated Jul. 9, 2014 received in U.S. Appl. No. 14/028,469.
Response to Office Action filed on Jun. 13, 2014 for U.S. Appl. No. 14/028,469.
U.S. Office Action dated Apr. 3, 2014 received in U.S. Appl. No. 14/028,469.
Response to Office Action filed on Mar. 14, 2014 for U.S. Appl. No. 14/028,469.
U.S. Office Action dated Mar. 6, 2014 received in U.S. Appl. No. 14/028,469.
Response to Office Action filed on Feb. 3, 2014 for U.S. Appl. No. 14/028,469.
U.S. Office Action dated Dec. 6, 2013 received in U.S. Appl. No. 14/028,469.
Appeal Brief filed Jan. 30, 2017 for U.S. Appl. No. 14/639,034.
Pre-Brief Appeal Conference Decision dated Jul. 21, 2016 and received in U.S. Appl. No. 14/639,034.
Pre-Appeal Brief Request for Review, Notice of Appeal, and Pre-Brief Brief filed on Jun. 30, 2016 for U.S. Appl. No. 14/639,034.
U.S. Office Action dated Dec. 30, 2015 received in U.S. Appl. No. 14/639,034.
Response to Office Action filed on Nov. 30, 2015 for U.S. Appl. No. 14/639,034.
U.S. Office Action dated May 29, 2015 received in U.S. Appl. No. 14/639,034.
Response to Office Action filed on Apr. 26, 2017 for U.S. Appl. No. 14/724,593.
U.S. Office Action dated Feb. 17, 2017 received in U.S. Appl. No. 14/724,593.
Pre-Brief Appeal Conference Decision dated Dec. 12, 2016 and received in U.S. Appl. No. 14/724,593.
Pre-Appeal Brief Request for Review, Notice of Appeal, and Pre-Brief Brief filed on Nov. 7, 2016 for U.S. Appl. No. 14/724,593.
U.S. Office Action dated May 6, 2016 received in U.S. Appl. No. 14/724,593.
Response to Office Action filed on Jan. 7, 2016 for U.S. Appl. No. 14/724,593.
U.S. Office Action dated Aug. 4, 2015 received in U.S. Appl. No. 14/724,593.
Preliminary Amendment filed on Aug. 28, 2018 in U.S. Appl. No. 16/051,751. (6 pages).
U.S. Office Action dated Feb. 4, 2019 received in U.S. Appl. No. 16/051,751.(17 pages).
Response to Office Action filed Apr. 30, 2019 in U.S. Appl. No. 16/051,751.(8 pages).

* cited by examiner

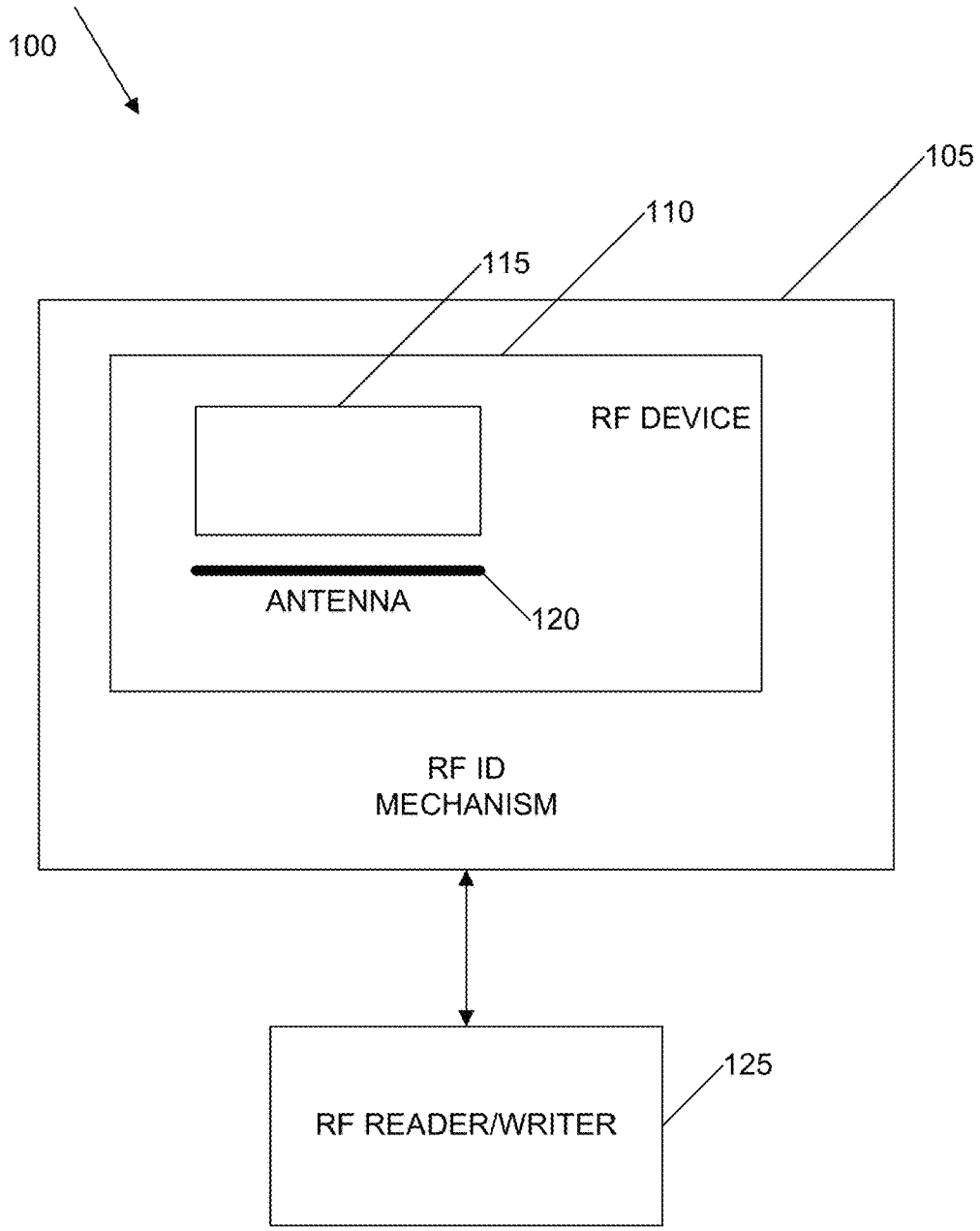
100
105
110
115
RF DEVICE
ANTENNA
120
RF ID
MECHANISM
125
RF READER/WRITER

FIG. 1

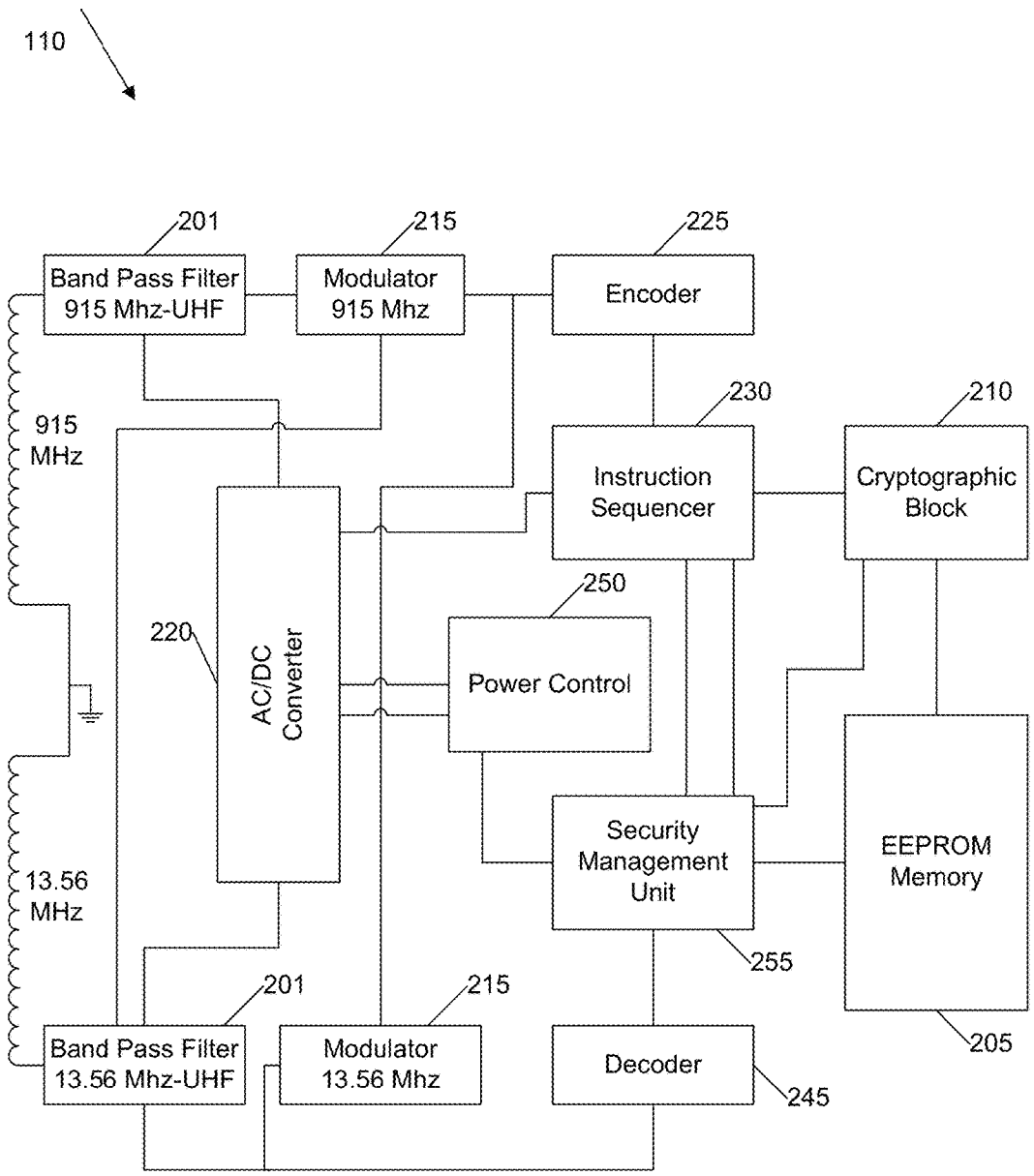
110
201
Band Pass Filter
915 Mhz-UHF
215
Modulator
915 Mhz
225
Encoder
915
MHz
230
Instruction
Sequencer
210
Cryptographic
Block
220
AC/DC
Converter
250
Power Control
Security
Management
Unit
EEPROM
Memory
13.56
MHz
255
201
Band Pass Filter
13.56 Mhz-UHF
215
Modulator
13.56 Mhz
Decoder
245
205

FIG. 2

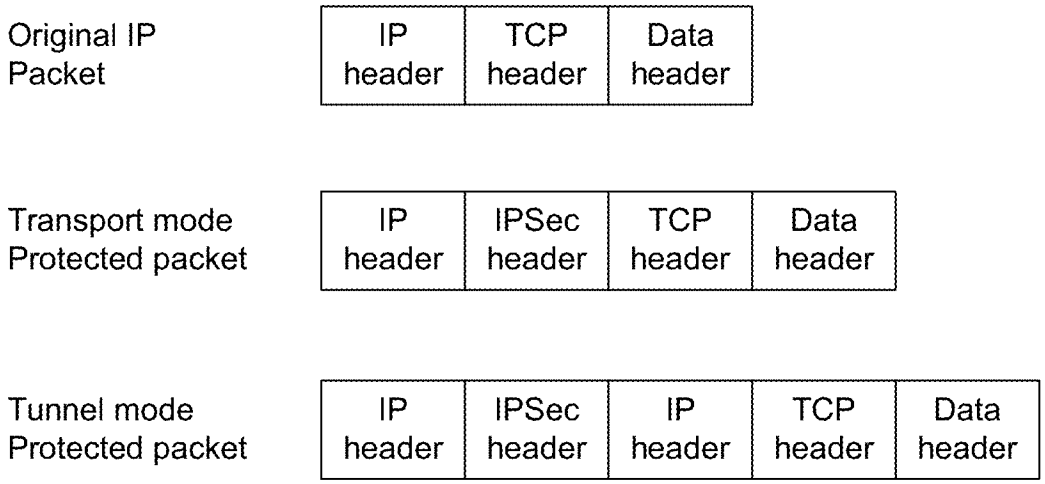
Original IP Packet
IP header
TCP header
Data header
Transport mode Protected packet
IP header
IPSec header
TCP header
Data header
Tunnel mode Protected packet
IP header
IPSec header
IP header
TCP header
Data header

FIG. 3A

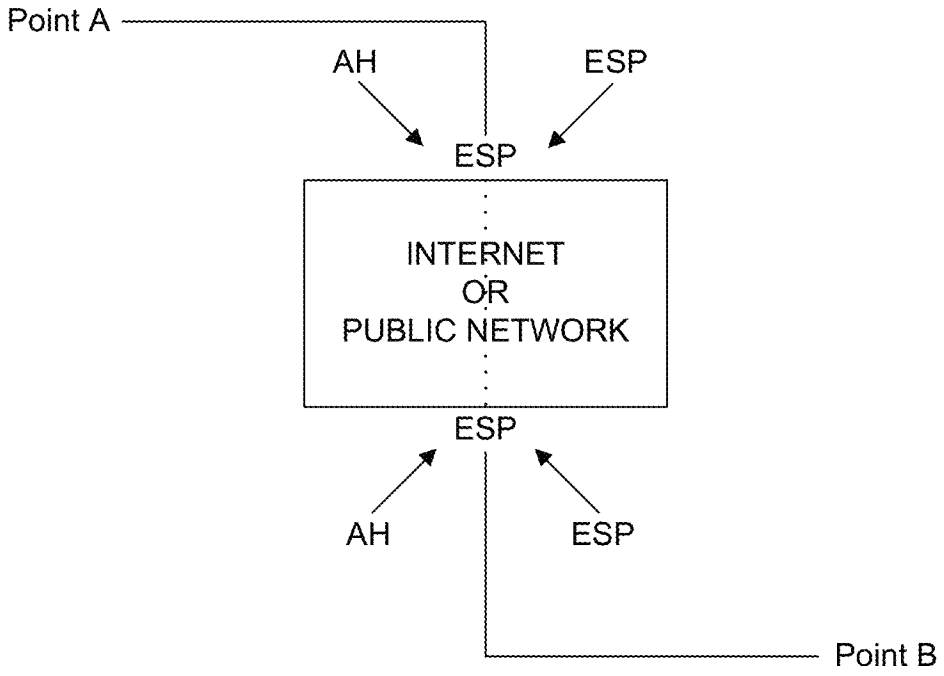
Point A
AH
ESP
ESP
INTERNET
OR
PUBLIC NETWORK
ESP
AH
ESP
Point B

FIG. 3B

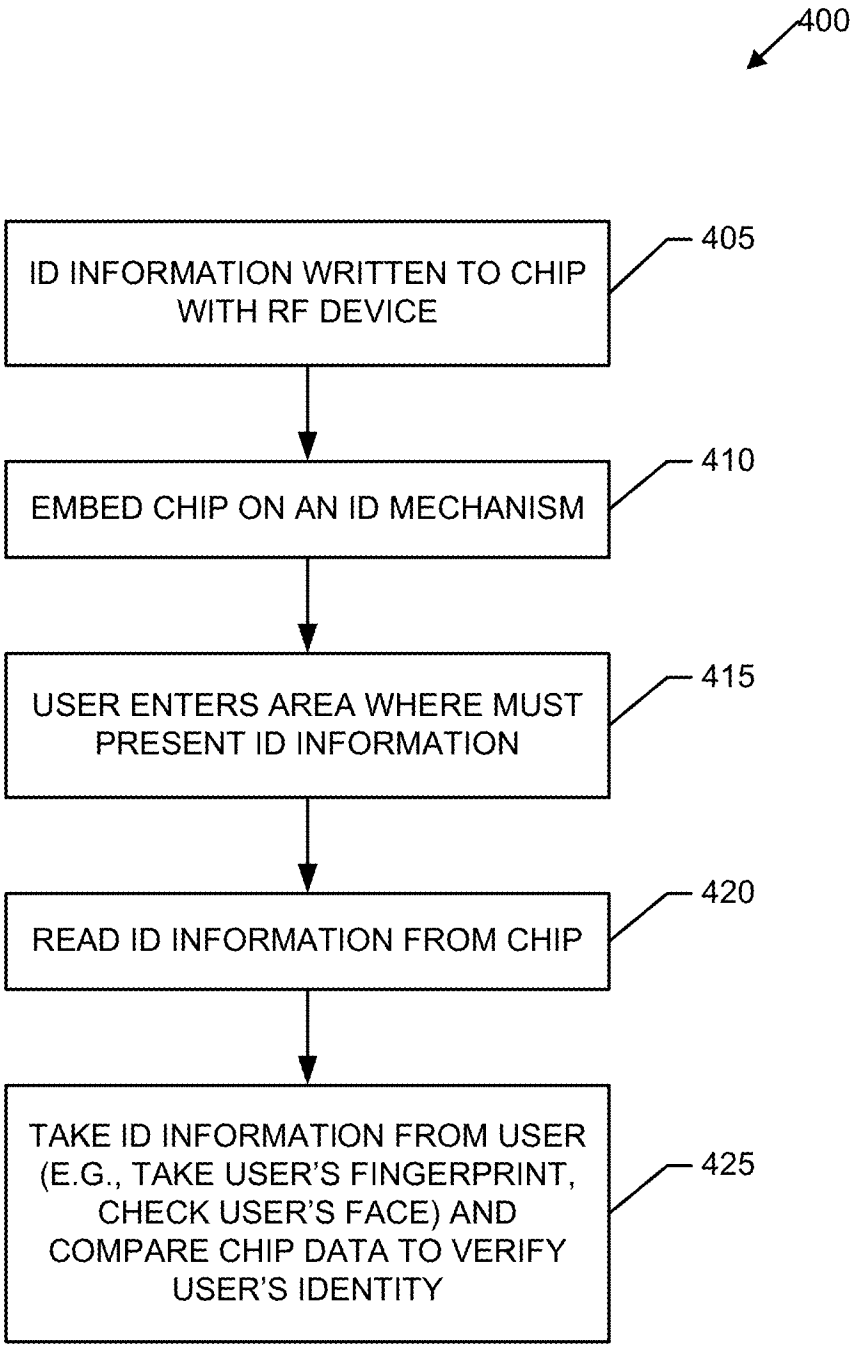
400
ID INFORMATION WRITTEN TO CHIP WITH RF DEVICE
405
EMBED CHIP ON AN ID MECHANISM
410
USER ENTERS AREA WHERE MUST PRESENT ID INFORMATION
415
READ ID INFORMATION FROM CHIP
420
TAKE ID INFORMATION FROM USER (E.G., TAKE USER'S FINGERPRINT, CHECK USER'S FACE) AND COMPARE CHIP DATA TO VERIFY USER'S IDENTITY
425

FIG. 4

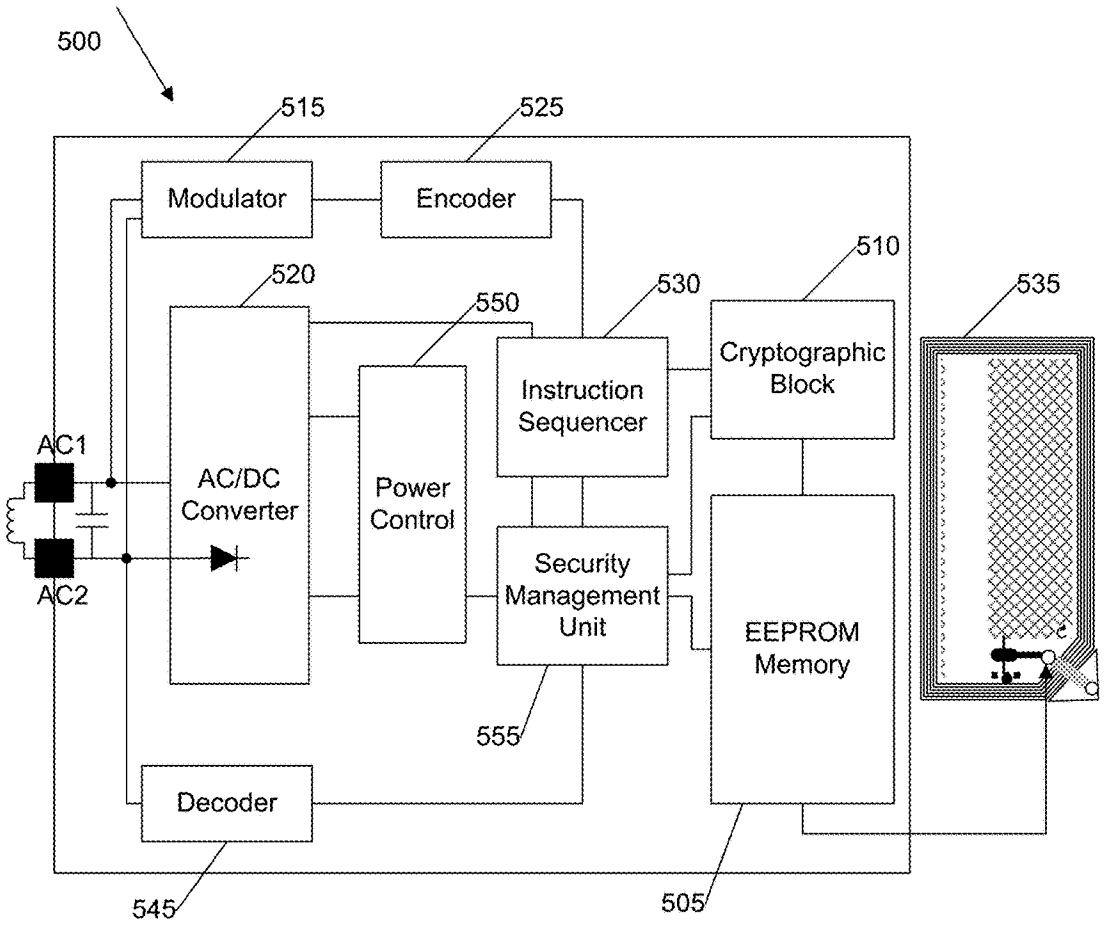
500
515
525
Modulator
Encoder
510
520
530
535
550
Cryptographic Block
Instruction Sequencer
AC1
AC/DC Converter
Power Control
Security Management Unit
AC2
EEPROM Memory
555
Decoder
545
505

FIG. 5

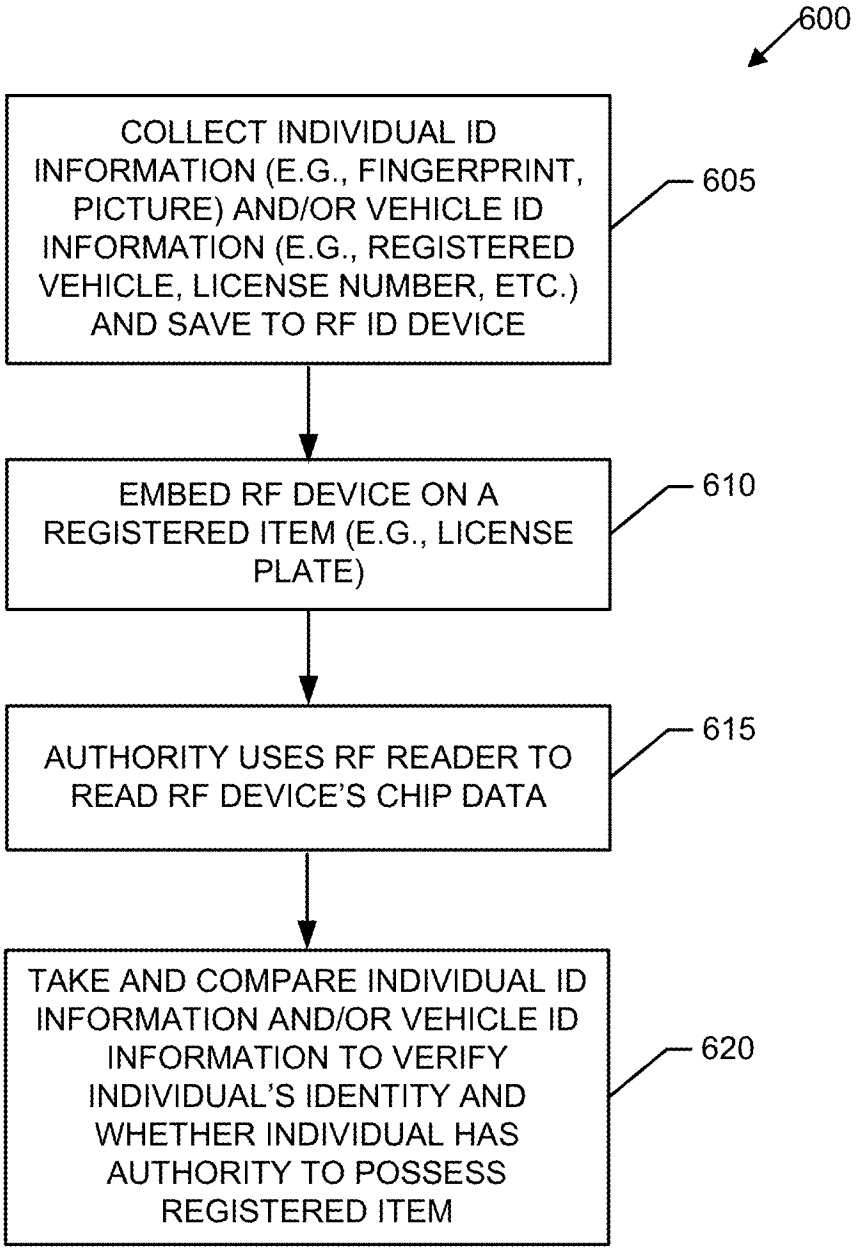
600
COLLECT INDIVIDUAL ID INFORMATION (E.G., FINGERPRINT, PICTURE) AND/OR VEHICLE ID INFORMATION (E.G., REGISTERED VEHICLE, LICENSE NUMBER, ETC.) AND SAVE TO RF ID DEVICE
605
EMBED RF DEVICE ON A REGISTERED ITEM (E.G., LICENSE PLATE)
610
AUTHORITY USES RF READER TO READ RF DEVICE'S CHIP DATA
615
TAKE AND COMPARE INDIVIDUAL ID INFORMATION AND/OR VEHICLE ID INFORMATION TO VERIFY INDIVIDUAL'S IDENTITY AND WHETHER INDIVIDUAL HAS AUTHORITY TO POSSESS REGISTERED ITEM
620

FIG. 6

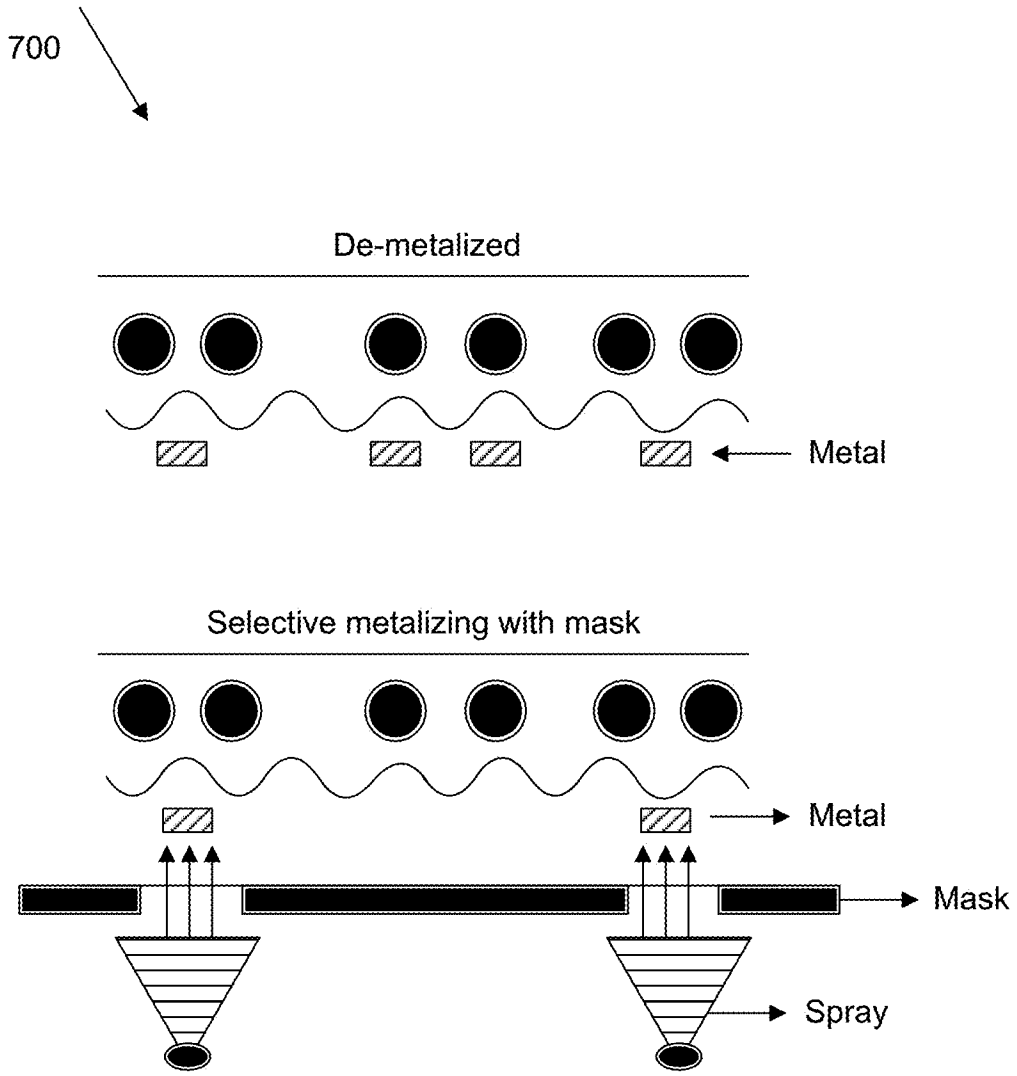
700
De-metalized
Metal
Selective metalizing with mask
Metal
Mask
Spray

FIG. 7

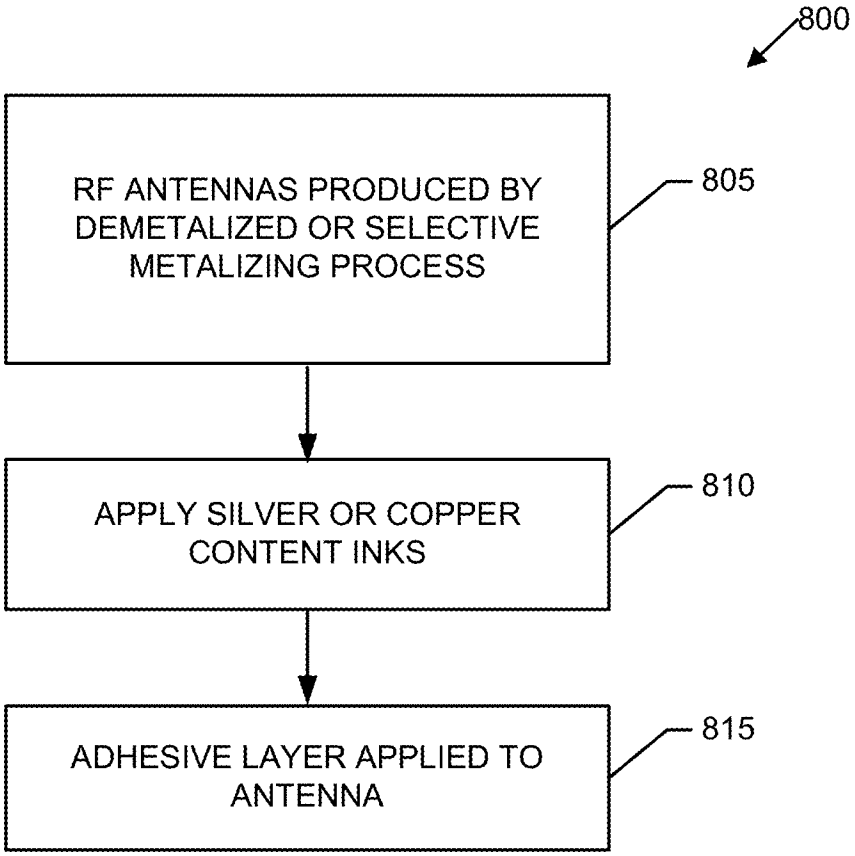
800
RF ANTENNAS PRODUCED BY DEMETALIZED OR SELECTIVE METALIZING PROCESS
805
APPLY SILVER OR COPPER CONTENT INKS
810
ADHESIVE LAYER APPLIED TO ANTENNA
815

FIG. 8

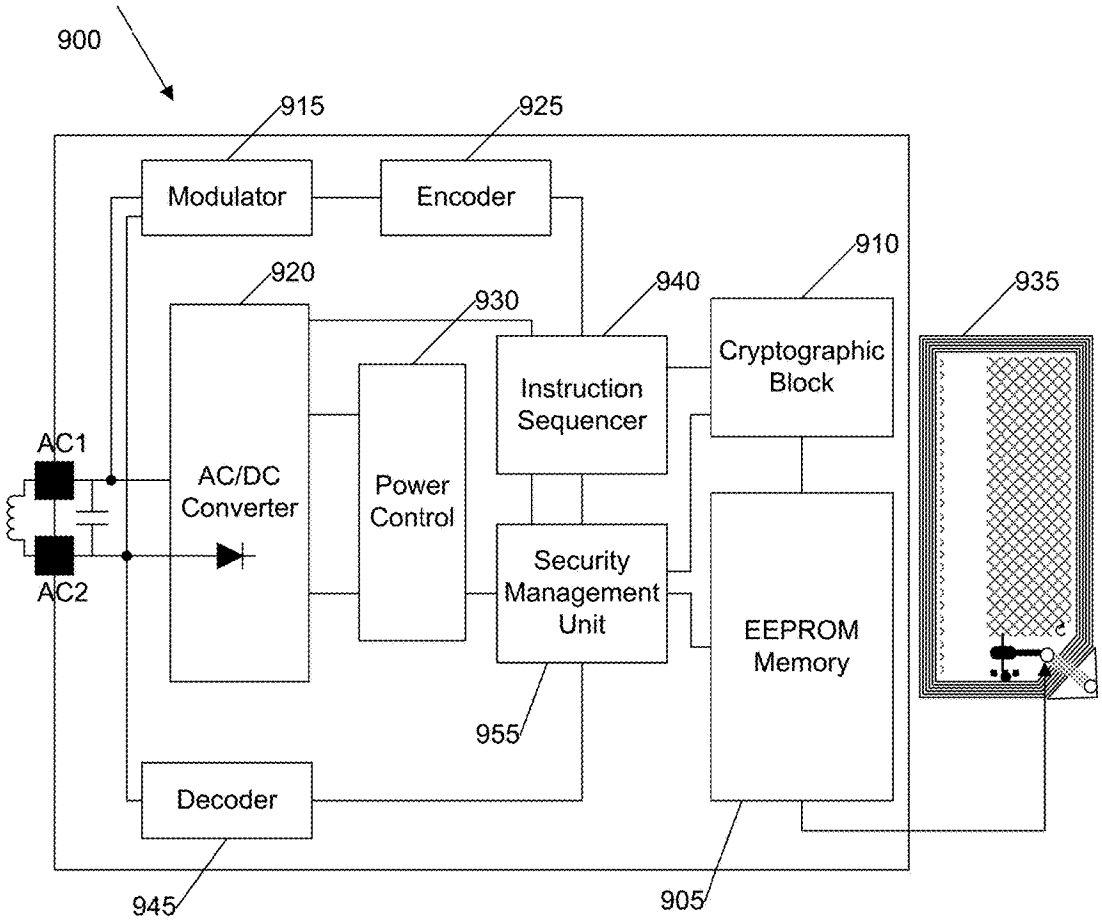
900
915
925
Modulator
Encoder
910
920
940
935
930
Cryptographic Block
Instruction Sequencer
AC1
AC/DC Converter
Power Control
Security Management Unit
EEPROM Memory
AC2
955
Decoder
945
905

FIG. 9

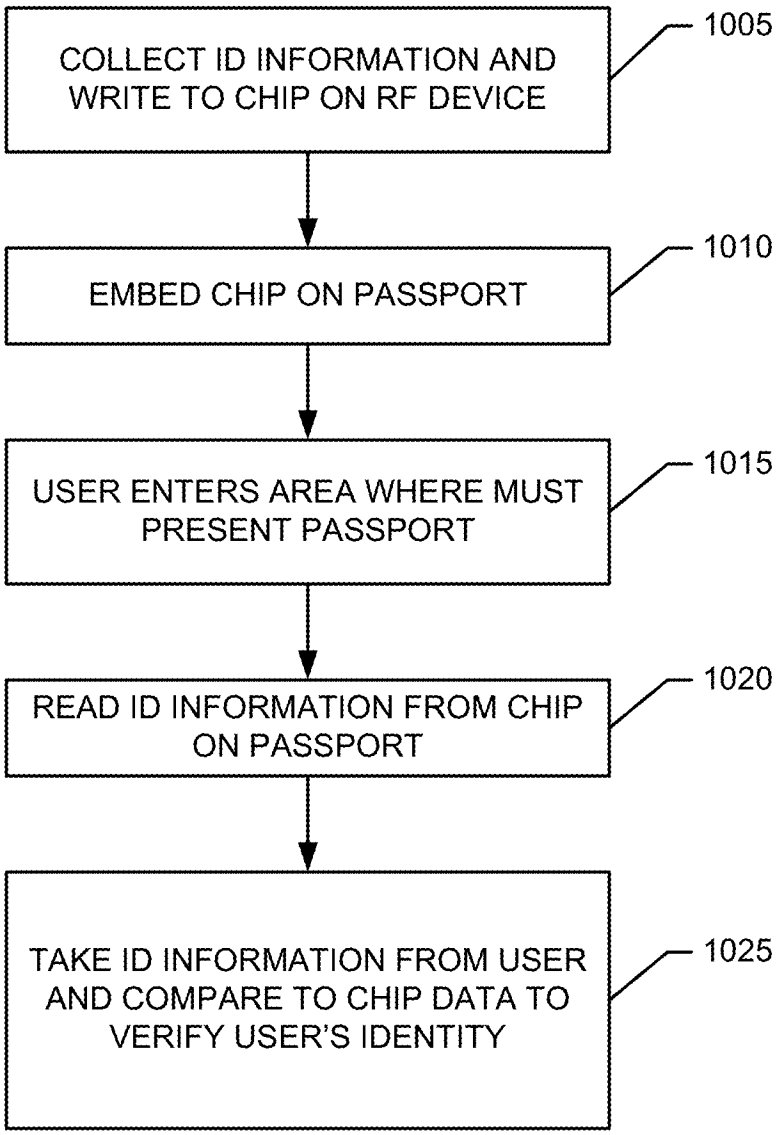
COLLECT ID INFORMATION AND WRITE TO CHIP ON RF DEVICE
1005
EMBED CHIP ON PASSPORT
1010
USER ENTERS AREA WHERE MUST PRESENT PASSPORT
1015
READ ID INFORMATION FROM CHIP ON PASSPORT
1020
TAKE ID INFORMATION FROM USER AND COMPARE TO CHIP DATA TO VERIFY USER'S IDENTITY
1025

FIG. 10

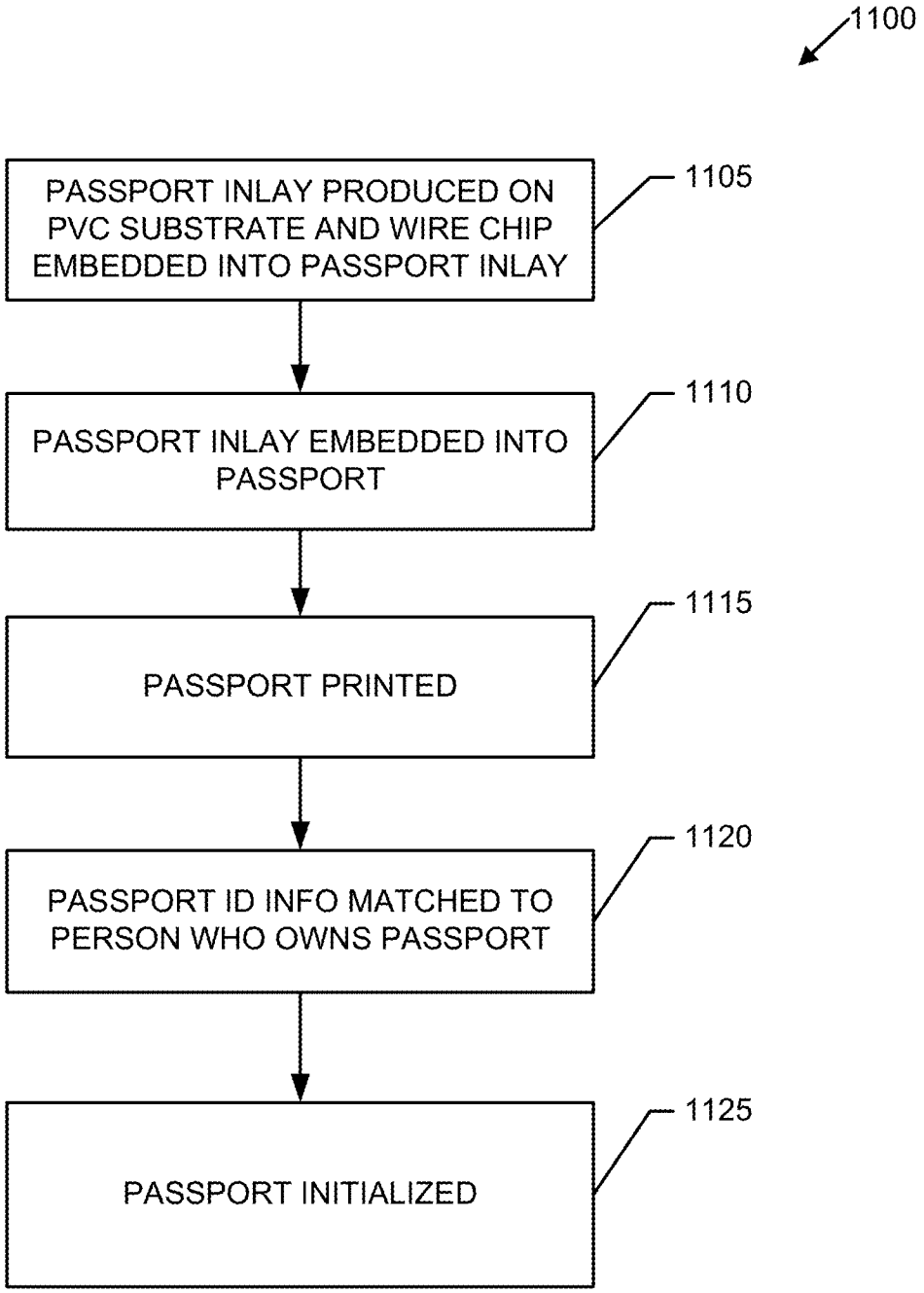
1100
PASSPORT INLAY PRODUCED ON PVC SUBSTRATE AND WIRE CHIP EMBEDDED INTO PASSPORT INLAY
1105
PASSPORT INLAY EMBEDDED INTO PASSPORT
1110
PASSPORT PRINTED
1115
PASSPORT ID INFO MATCHED TO PERSON WHO OWNS PASSPORT
1120
PASSPORT INITIALIZED
1125

FIG. 11

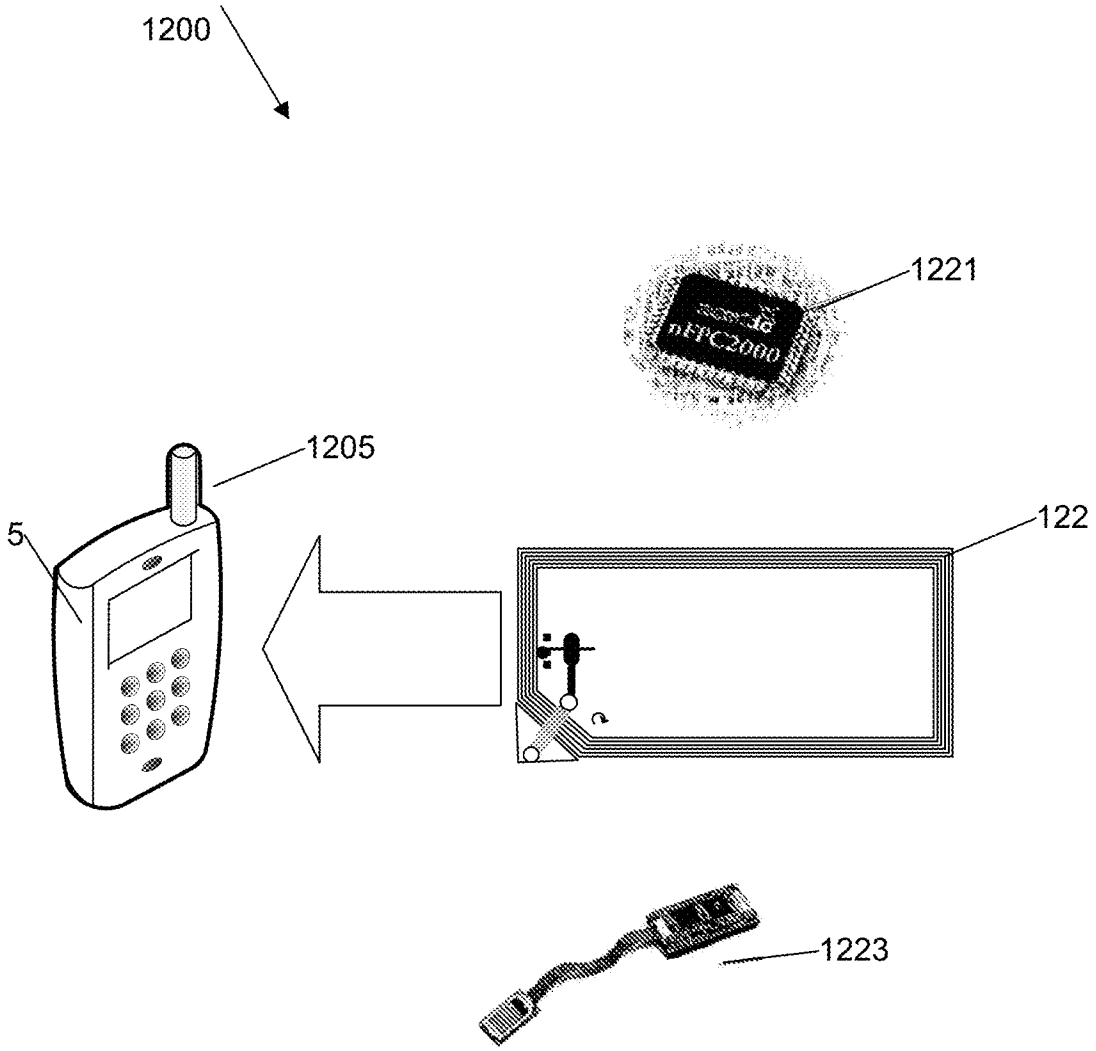

FIG. 12

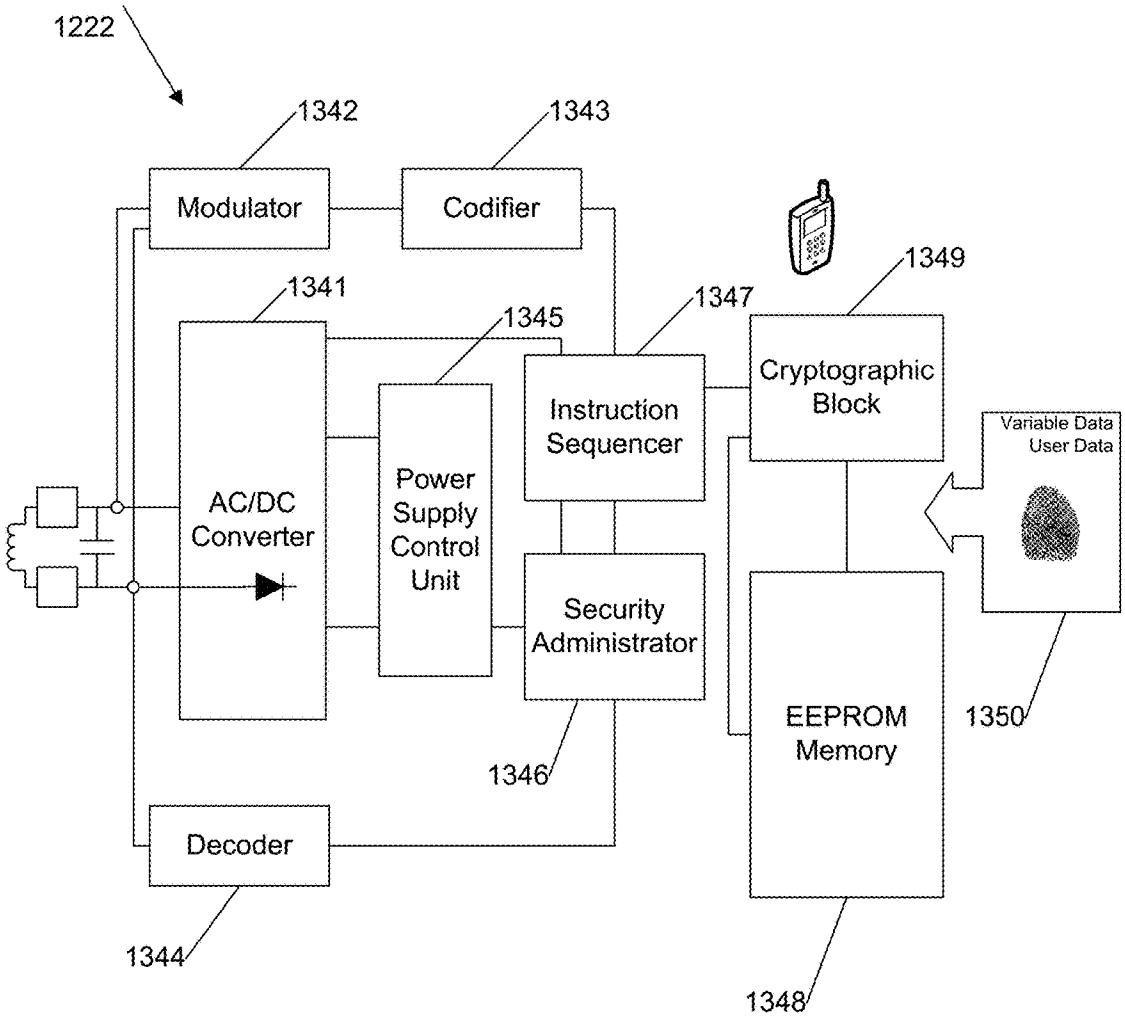
1222
1342
1343
Modulator
Codifier
1349
1341
1345
1347
Cryptographic Block
Instruction Sequencer
Variable Data
User Data
AC/DC Converter
Power Supply Control Unit
Security Administrator
EEPROM Memory
1350
1346
Decoder
1344
1348

FIG. 13

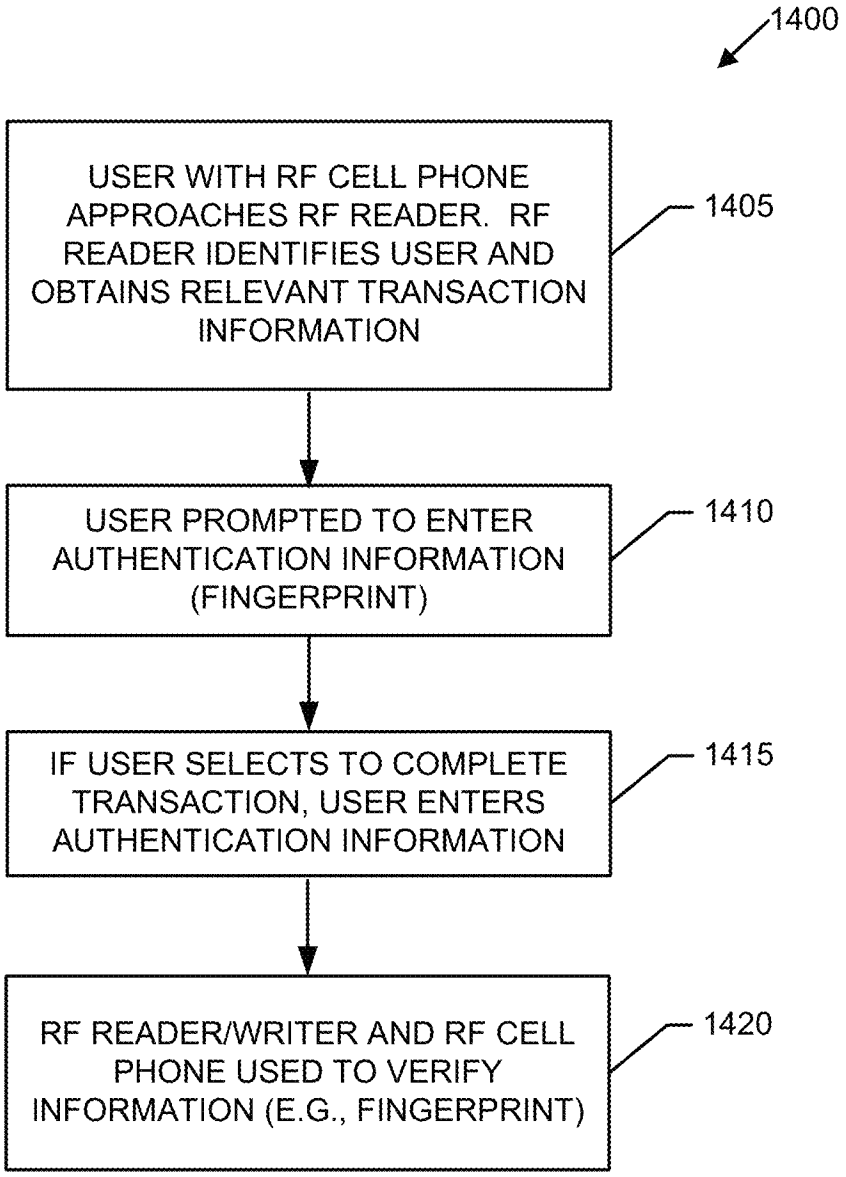
1400
USER WITH RF CELL PHONE APPROACHES RF READER. RF READER IDENTIFIES USER AND OBTAINS RELEVANT TRANSACTION INFORMATION
1405
USER PROMPTED TO ENTER AUTHENTICATION INFORMATION (FINGERPRINT)
1410
IF USER SELECTS TO COMPLETE TRANSACTION, USER ENTERS AUTHENTICATION INFORMATION
1415
RF READER/WRITER AND RF CELL PHONE USED TO VERIFY INFORMATION (E.G., FINGERPRINT)
1420

FIG. 14

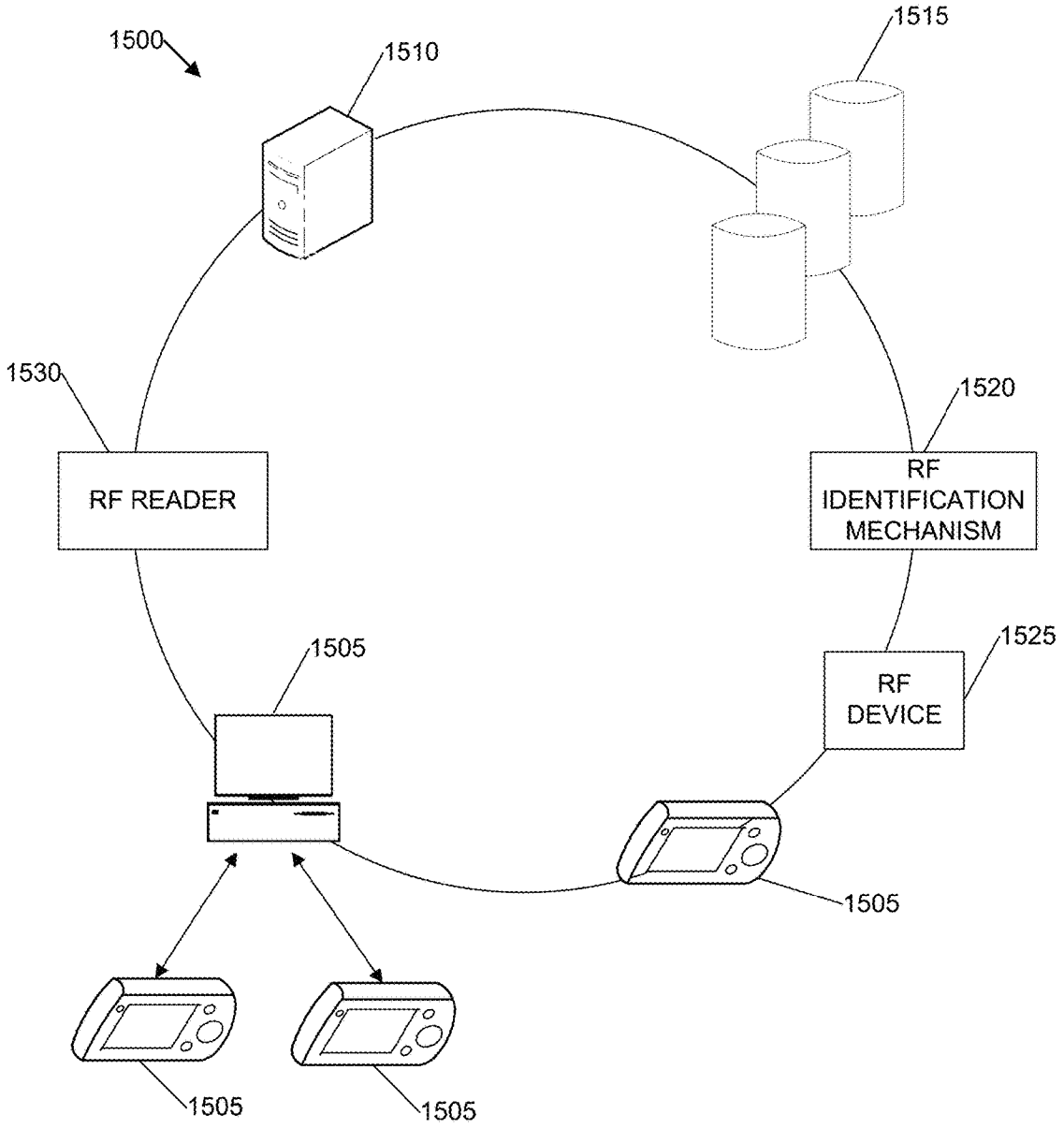
1500
1510
1515
1530
1520
RF READER
RF IDENTIFICATION MECHANISM
1525
1505
RF DEVICE
1505
1505
1505

FIG. 15

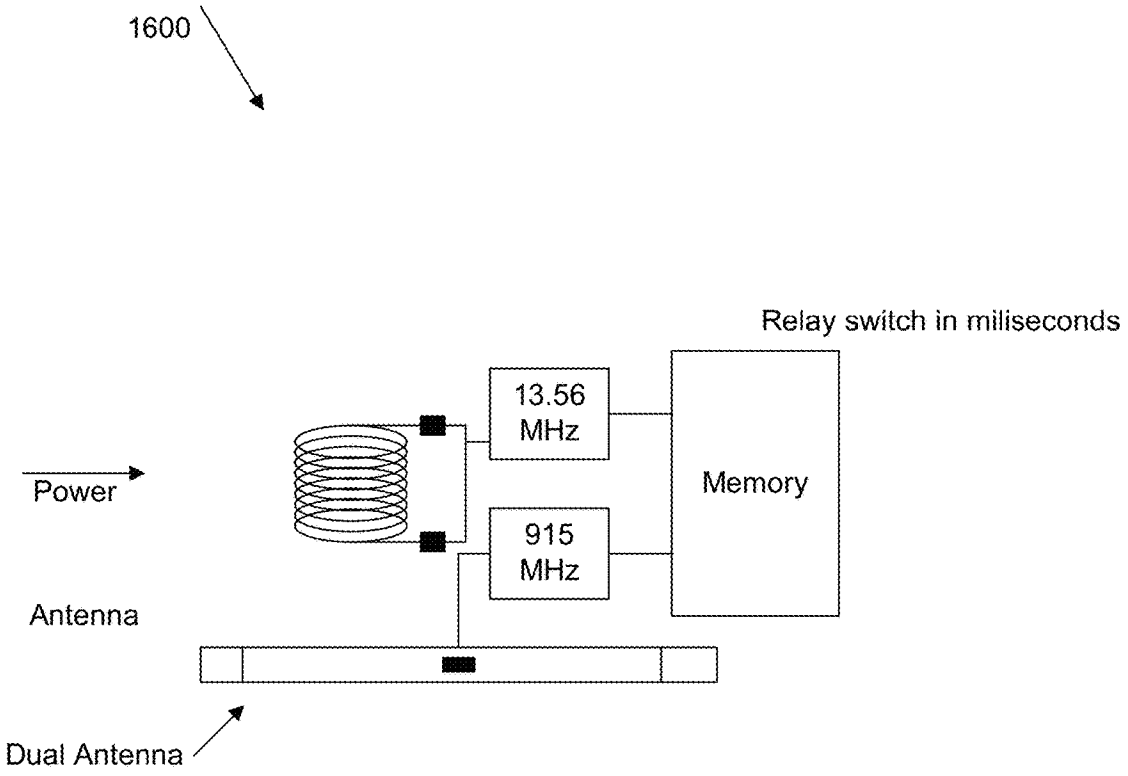
1600
Relay switch in miliseconds
13.56 MHz
Memory
Power
915 MHz
Antenna
Dual Antenna

FIG. 16

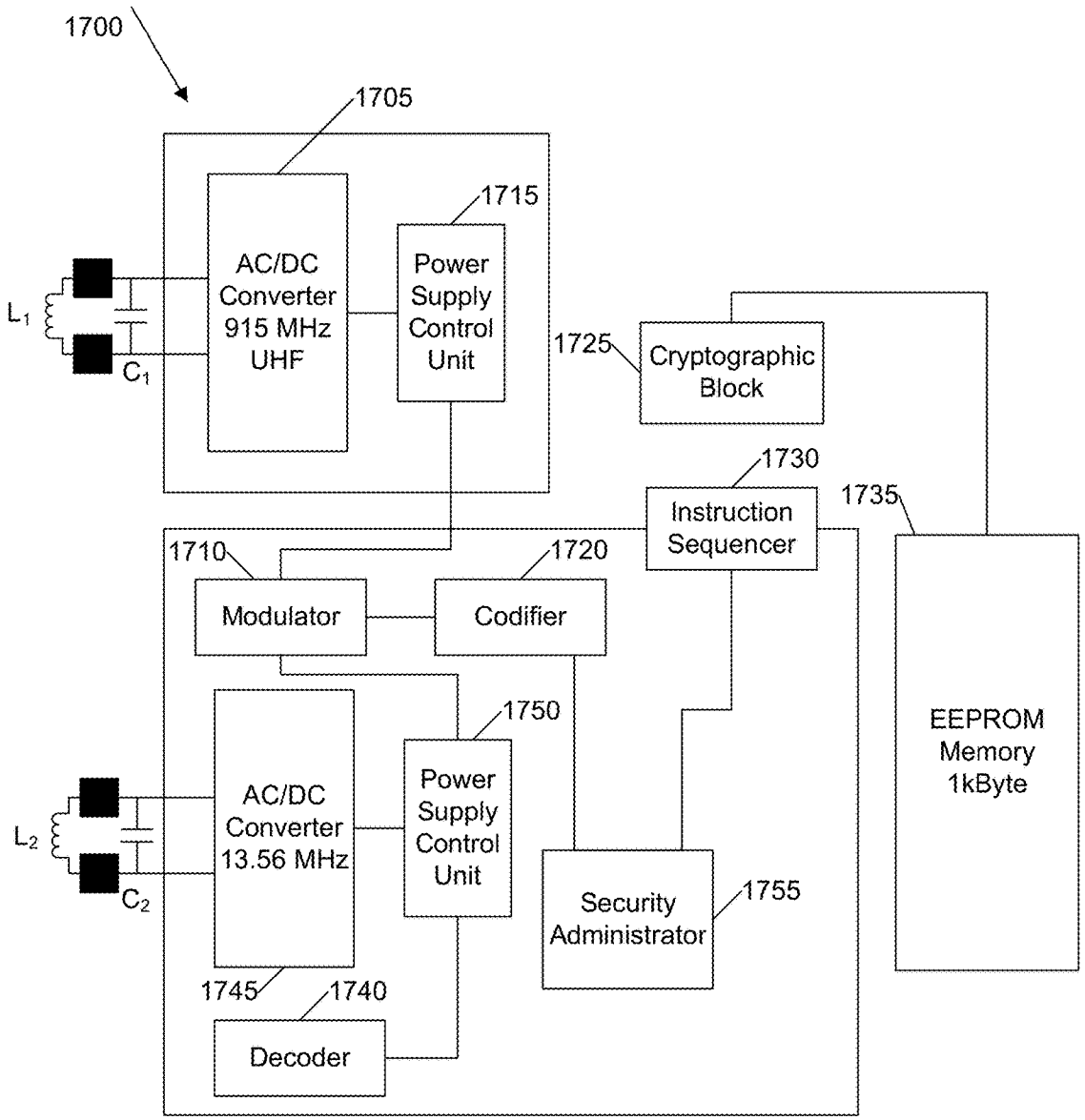
1700
1705
1715
AC/DC Converter 915 MHz UHF
Power Supply Control Unit
L_1
C_1
1725
Cryptographic Block
1730
Instruction Sequencer
1735
1710
1720
Modulator
Codifier
1750
AC/DC Converter 13.56 MHz
Power Supply Control Unit
L_2
C_2
Security Administrator
1755
EEPROM Memory 1kByte
1745
1740
Decoder

FIG. 17

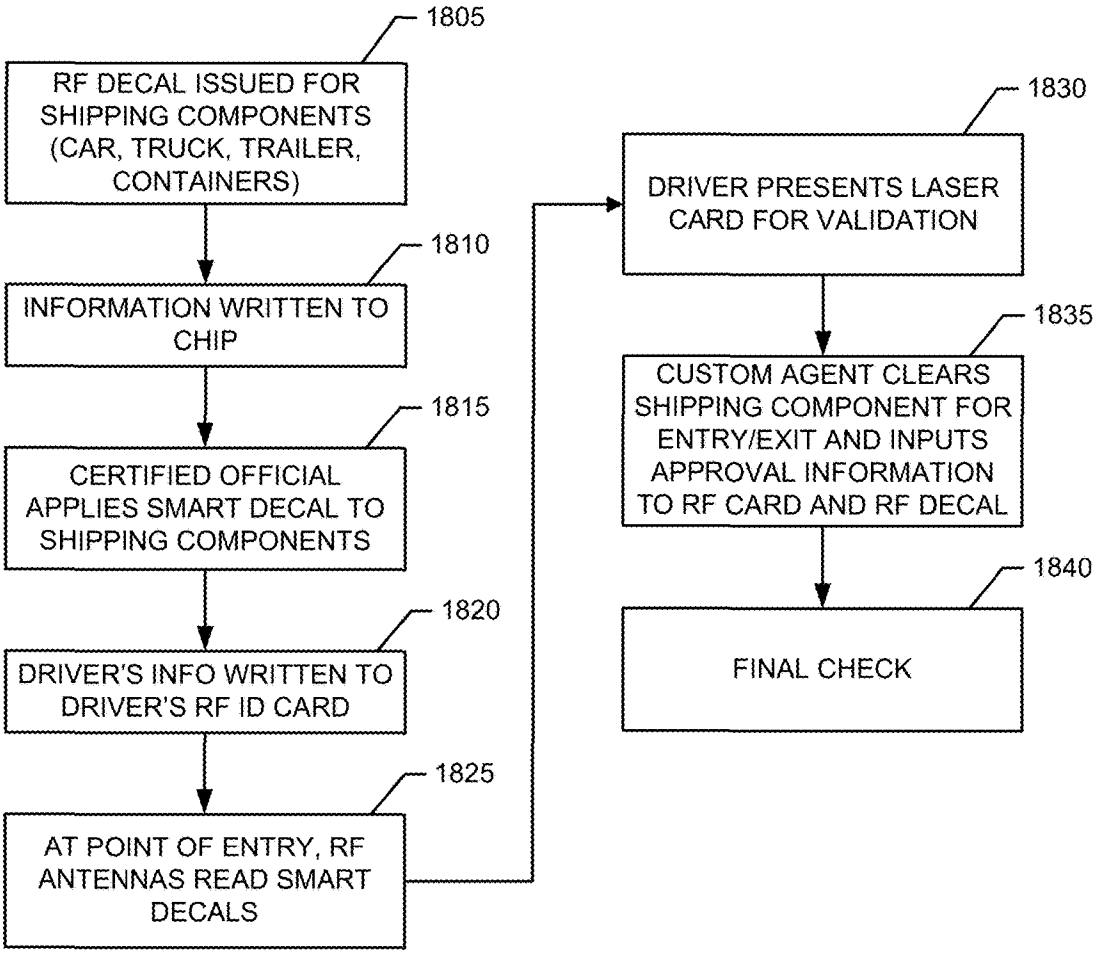
1805
RF DECAL ISSUED FOR SHIPPING COMPONENTS (CAR, TRUCK, TRAILER, CONTAINERS)
1810
INFORMATION WRITTEN TO CHIP
1815
CERTIFIED OFFICIAL APPLIES SMART DECAL TO SHIPPING COMPONENTS
1820
DRIVER'S INFO WRITTEN TO DRIVER'S RF ID CARD
1825
AT POINT OF ENTRY, RF ANTENNAS READ SMART DECALS
1830
DRIVER PRESENTS LASER CARD FOR VALIDATION
1835
CUSTOM AGENT CLEARS SHIPPING COMPONENT FOR ENTRY/EXIT AND INPUTS APPROVAL INFORMATION TO RF CARD AND RF DECAL
1840
FINAL CHECK

FIG. 18

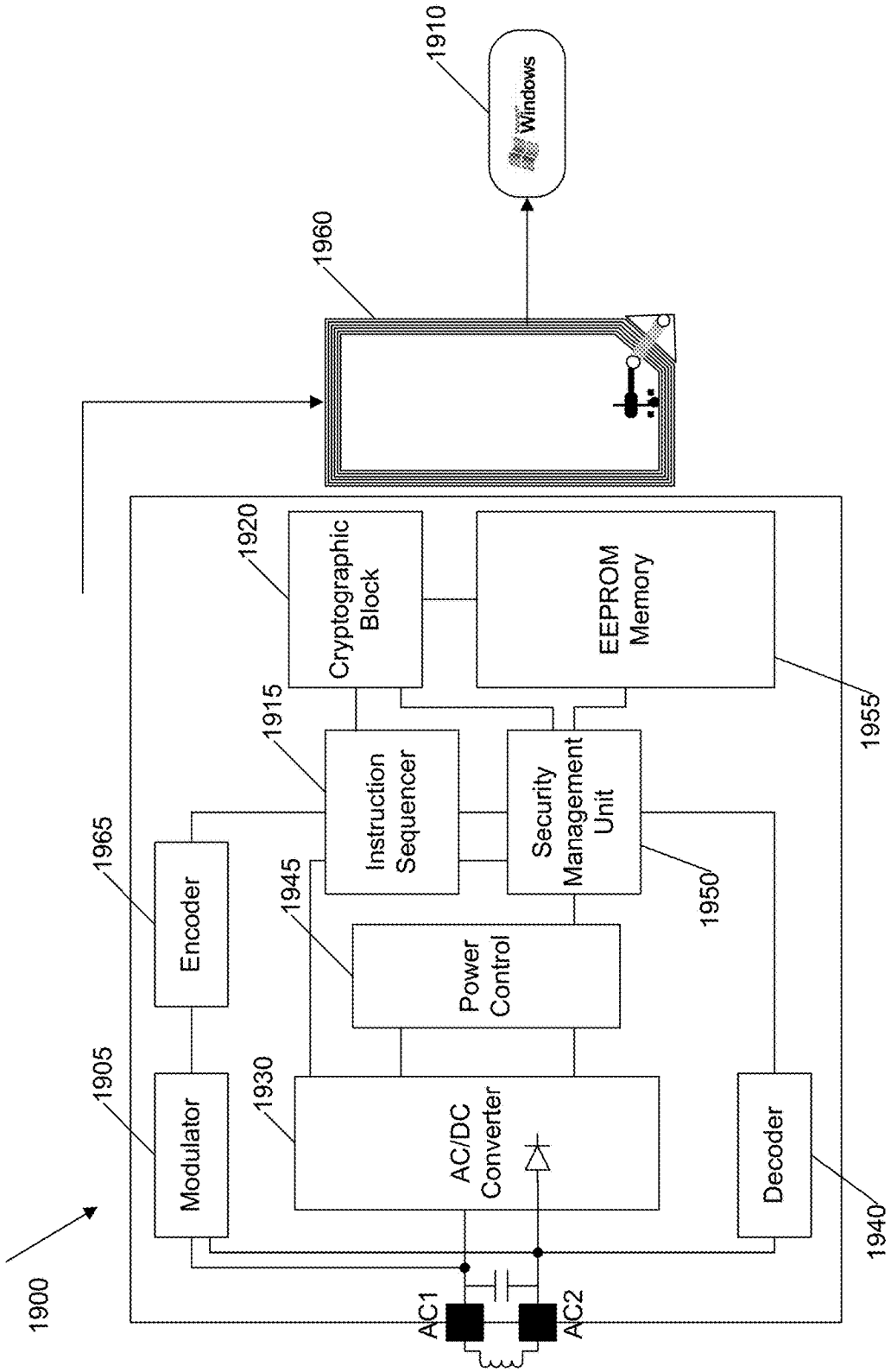
1910
Windows
1960
1920
Cryptographic Block
EEPROM Memory
1955
1915
Instruction Sequencer
Security Management Unit
1950
1965
Encoder
1945
Power Control
1905
Modulator
1930
AC/DC Converter
Decoder
1940
1900
AC1
AC2

FIG. 19

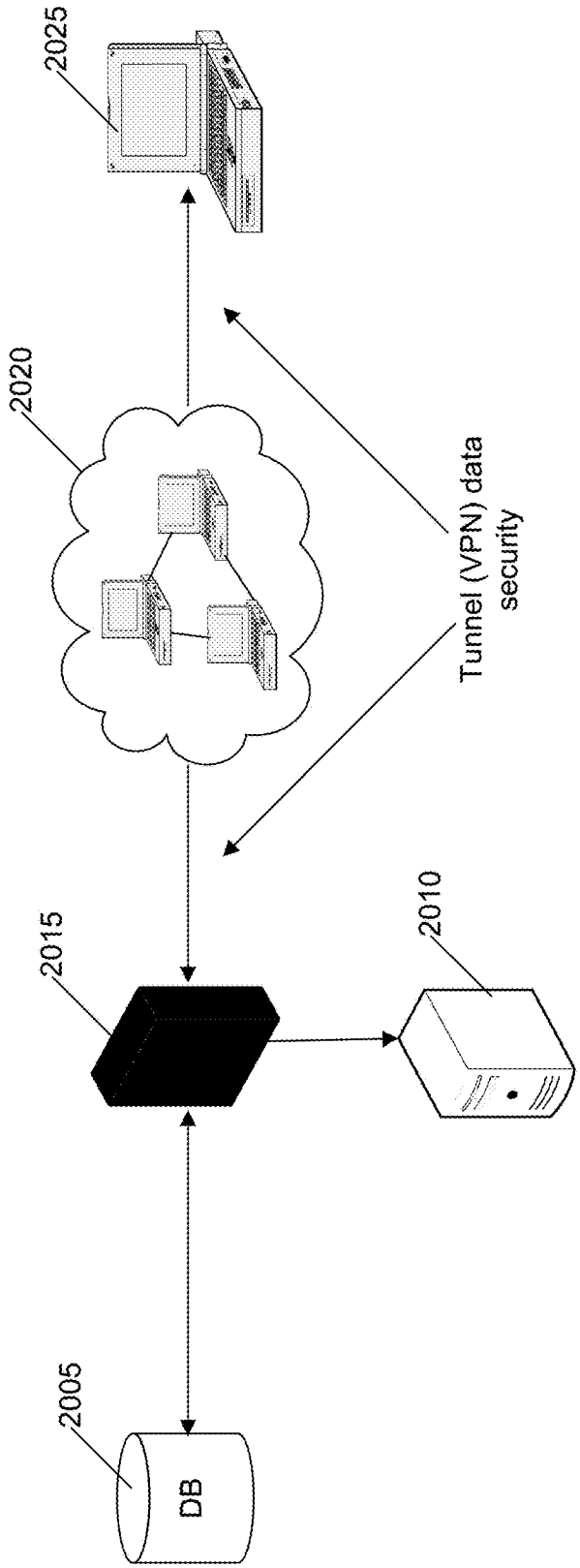

FIG. 20

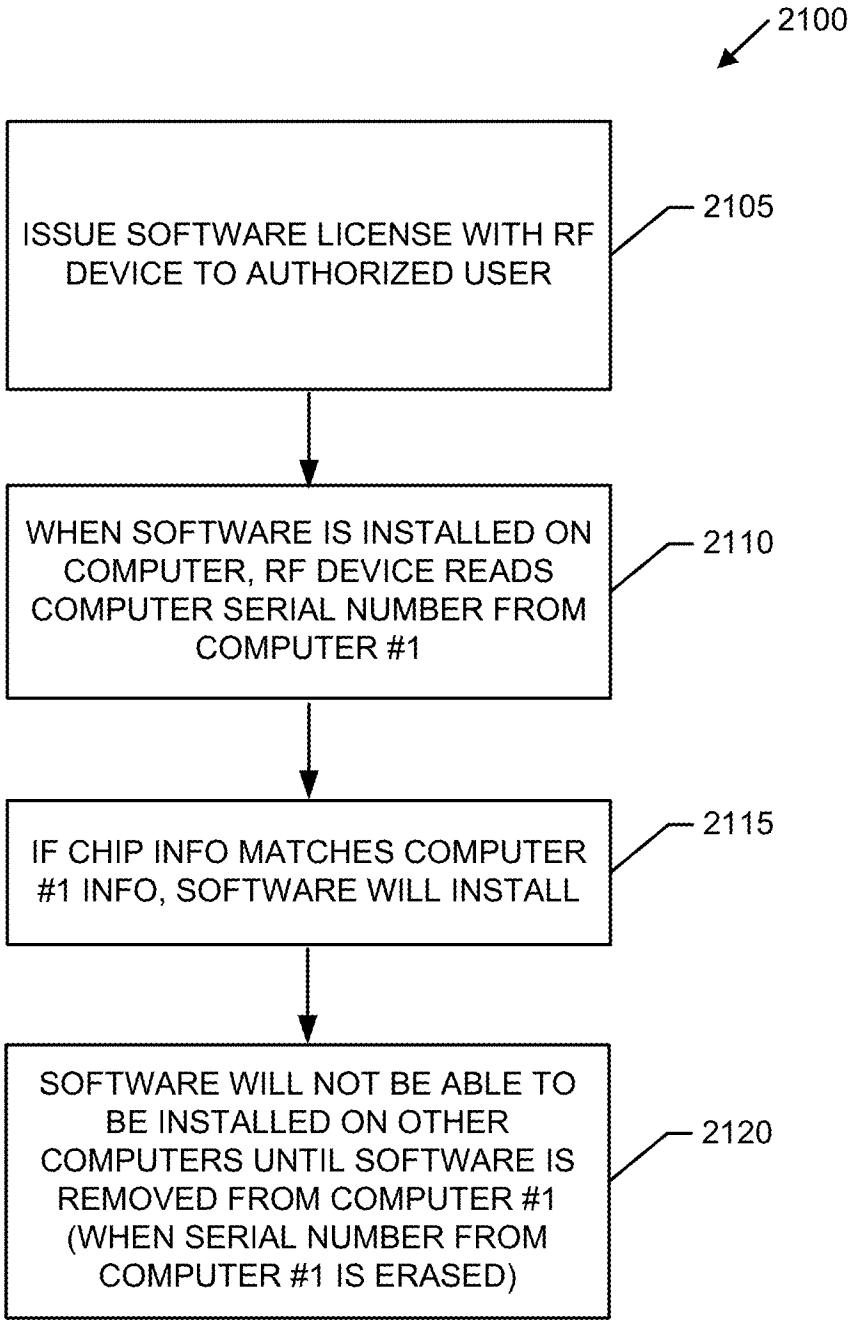
2100
ISSUE SOFTWARE LICENSE WITH RF DEVICE TO AUTHORIZED USER
2105
WHEN SOFTWARE IS INSTALLED ON COMPUTER, RF DEVICE READS COMPUTER SERIAL NUMBER FROM COMPUTER #1
2110
IF CHIP INFO MATCHES COMPUTER #1 INFO, SOFTWARE WILL INSTALL
2115
SOFTWARE WILL NOT BE ABLE TO BE INSTALLED ON OTHER COMPUTERS UNTIL SOFTWARE IS REMOVED FROM COMPUTER #1 (WHEN SERIAL NUMBER FROM COMPUTER #1 IS ERASED)
2120

FIG. 21

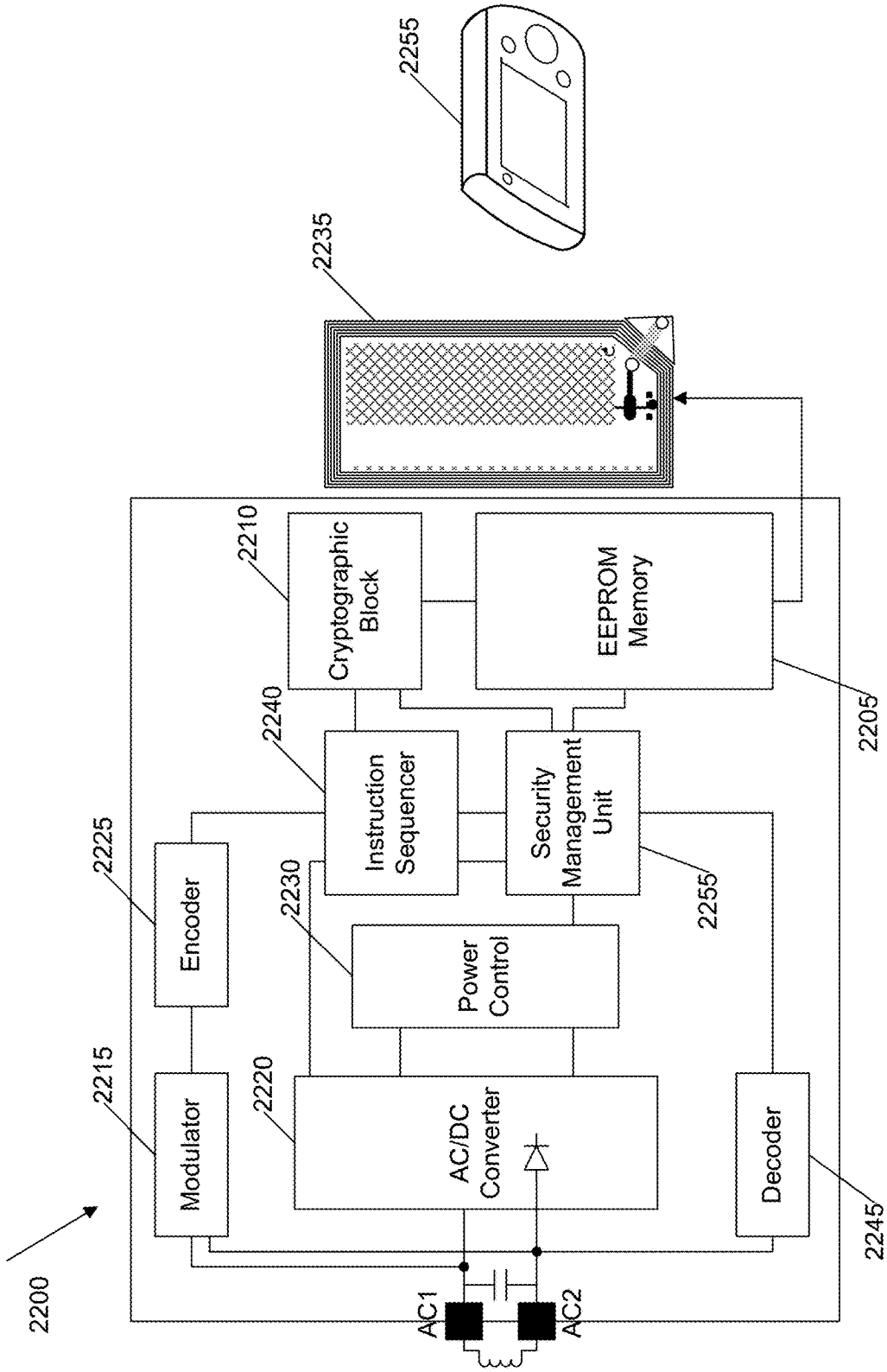
2200
2215
Modulator
2225
Encoder
2210
Cryptographic Block
2240
Instruction Sequencer
2230
Power Control
2220
AC/DC Converter
AC1
AC2
EEPROM Memory
2205
Security Management Unit
2255
Decoder
2245
2235
2255

FIG. 22

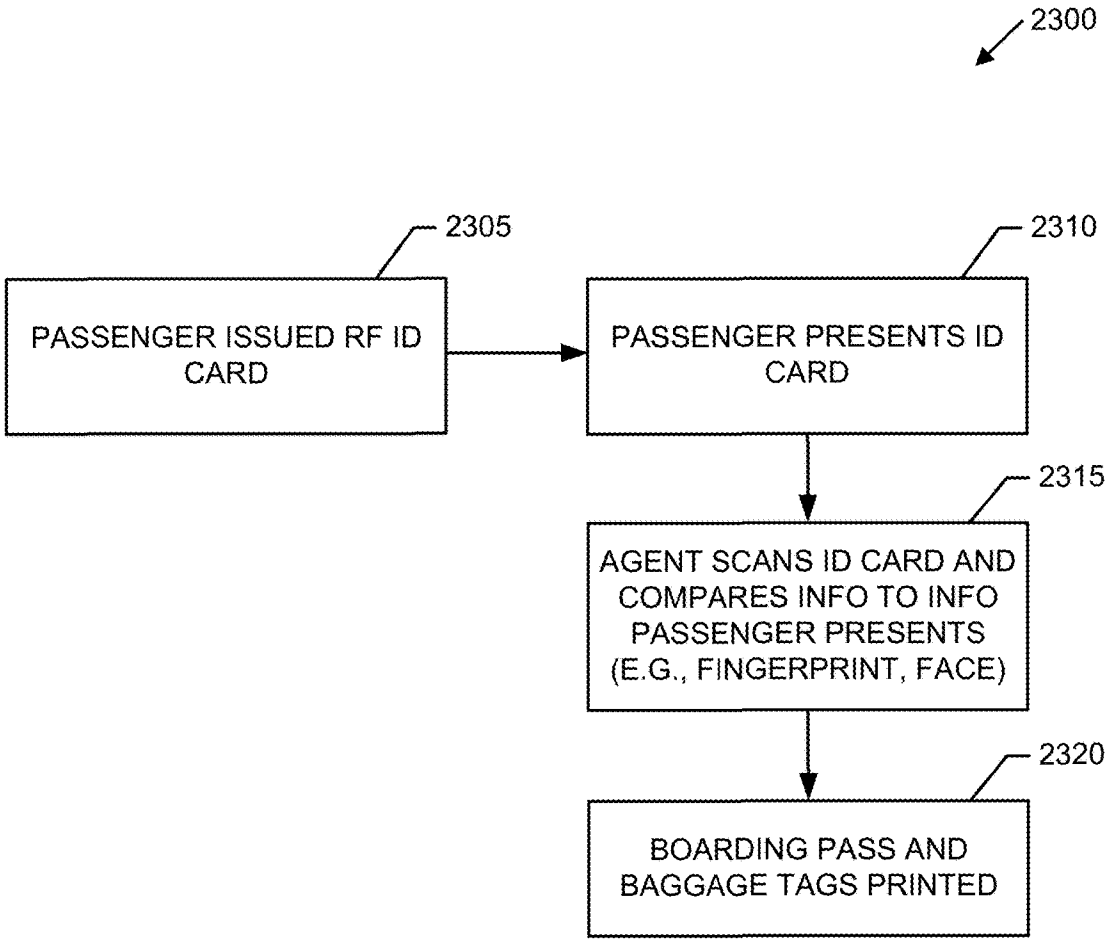
2300
2305
PASSENGER ISSUED RF ID CARD
2310
PASSENGER PRESENTS ID CARD
2315
AGENT SCANS ID CARD AND COMPARES INFO TO INFO PASSENGER PRESENTS (E.G., FINGERPRINT, FACE)
2320
BOARDING PASS AND BAGGAGE TAGS PRINTED

FIG. 23

SYSTEM AND METHOD FOR PROVIDING SECURE TRANSACTIONAL SOLUTIONS

BACKGROUND OF THE INVENTION

Field of the Invention

The present invention generally relates to a system and method for providing secure identification solutions, and specifically to a system and method for verifying and tracking identification information.

SUMMARY OF THE INVENTION

The present invention provides a method and system for verifying and tracking identification information. In an embodiment of the invention, a system for delivering security solutions is provided that includes at least one of the following: a radio frequency (RF) identification device, an identification mechanism (e.g., a card, sticker), and an RF reader/writer. The system and method can be used in numerous embodiments, including, but not limited to:

- An RF Registration Item (e.g., License Plate) and Method of Use.
- An RF Identification Mechanism (e.g., Passport) and Method of Use.
- An RF Communications Device (e.g., Cellular Telephone) and Method of Use.
- A System and Method of Border Crossing Control.
- A System and Method for Limiting Software Downloads to Authorized Users.
- A System and Method for Airport Security.

The embodiments of the present invention are discussed below. Those experienced in the art will see that multiple features of certain embodiments described below can be incorporated into other embodiments both described and not described below.

The present invention is not limited to the above embodiments. Additional advantages and novel features of the invention will be set forth in part in the Description that follows, and in part will become more apparent to those skilled in the art upon examination of the following or upon learning by practice of the invention.

BRIEF DESCRIPTION OF THE FIGURES

FIGS. **1**, **2** and **4** illustrate the general invention, according to one embodiment of the present invention.

FIGS. **5-8** illustrate the RF registered item and method of use, in an embodiment of the present invention.

FIGS. **9-11** illustrate the RF passport and method of use, in an embodiment of the present invention.

FIGS. **12-14** illustrate the RF communications device and method of use, in an embodiment of the present invention.

FIGS. **15-18** illustrate a system and method for border crossing control, m an embodiment of the present invention.

FIGS. **3**A-**3**B and **19-21** illustrate a system and method for limiting software downloads to authorized users, in an embodiment of the present invention.

FIGS. **22-23** illustrate a description of the system and method for airport security, in an embodiment of the present invention.

DESCRIPTION OF THE INVENTION

I. General RF Identification System and Method of Use

FIG. **1** illustrates an overview system diagram **100**, according to one embodiment of the present invention. This embodiment comprises an RF device **110** connected to or embedded on an RF identification mechanism **105**, and an RF reader/writer **125**. The RF device **110** includes a chip **115** and an RF antenna **120**.

A. RF Device

FIG. **2** illustrates RF device **110**, according to one embodiment of the present invention. The RF device includes a chip and an RF antenna. The RF device allows electronic identification via the reading of data stored in the chip in a contactless mode.

FIG. **5** illustrates a dual frequency RF device **110**, according to one embodiment of the present invention. Those experienced in the art will see that a one frequency or multiple (more than two) frequency RF device can also be used. The RF device includes the following components: A modulator **215** is a device that receives baseband signals from an antenna. An AC/DC converter **220** is a device that receives an alternating current (AC) and converts it to direct current (DC). An encoder **225** is a device for encoding information received so that it may be utilized by another device or protocol. A decoder **245** is a device that decodes information from the encoder output so it may be used by another device or display. A power control **250** is a device which regulates voltage and current to protect an apparatus from both power surges and low power. An instruction sequencer **230** is a device that queues instructions to be sent to the chip's internal memory. A security management unit **255** is a device that checks and validates the cryptographic keys that will be sent to the cryptographic block. A cryptographic block **210** is a device that stores the security keys. These keys are checked and validated to grant or deny access to the memory chip. EEPROM memory **205** stores data. Information can be read and written from or to this device.

A more detailed description of an RF device can be found in U.S. patent application Ser. No. 10/118,092 filed 9 Apr. 2002; PCT Patent Application PCT/IB02/01439, filed 30 Apr. 2002, which are herein incorporated by reference. Additional information on the RF device can be found in the accompanying documents.

B. RF Identification Mechanism

Numerous features of RF identification mechanism are utilized in one embodiment of the present invention. In this embodiment, the RF device is embedded in the RF identification mechanism. One example of an RF identification mechanism is a card, and the description below refers to the identification mechanism as a card in several examples. However, those experienced in the art will recognize that multiple other embodiments of the identification mechanism are possible, including, but not limited to: a card, a cellular phone, and a personal digital assistant (PDA).

There are a variety of ways to make identification cards that are resistant to fraud and counterfeiting. In one embodiment, the present invention incorporates numerous security features, as explained below.

C. Features of Secure Identification Mechanisms

The present invention offers a variety of solutions for making secure and durable identification mechanisms resistant to fraud and counterfeiting. The following features help make the identification card more secure. These features are only examples, and those experienced in the art will see that the present invention is not limited to these features and that many other features can be incorporated.

In one embodiment of the present invention, at least one of the following features is incorporated: visible features, machine readable features, and proprietary substrate based features. Visible features require only the human eye to detect the security features. Machine readable features require special hardware (e.g., an ultraviolet light source, magnetic reader) to detect the security features. Proprietary substrate based features are security features incorporated within a plastic substrate.

In one embodiment of the present invention, at least one of the following characteristics are present relative to the identification mechanism: it is extremely difficult to duplicate; it is tamper proof, it is recognizable either visually or utilizing a machine readable device; it is durable enough to withstand harsh environments; it is produced by specialized, difficult to obtain production equipment; it can be machine readable; and cost savings are realized by volume production of the identification mechanism.

Security features curb petty, semiprofessional and professional counterfeiters by creating features that are highly difficult to reproduce. For example, the ready accessibility of dye sublimation card printers, color scanners, color printers, heat sources (e.g., hair dryers), and color photo copiers make it relatively easy to reproduce ordinary photo identification cards. In one embodiment, the present invention, therefore, utilizes images and texts that cannot be scanned or photocopied without noticeable distortion, or cannot be recreated without highly sophisticated and expensive equipment.

Security Features. In one embodiment, the present invention can incorporate at least one of the following security features:

Tamper Proof Material. This material consists of metalized polyester treated with a chemical that will not allow an auto adhesive hologram to be transferred from one document to another one. It will self-destruct by any attempt at transfer.

Bidi-Tri-Dimensional at Three Levels. This material must be created in an optical table by a qualified holographer and with a combination of design and dot-matrix effects created by precise digital means allow identification of the document's authenticity.

Hidden Images. A hologram can contain a hidden image that cannot be detected with the naked eyes. The hidden image can be identified by shooting a laser at 45 degrees. The reflection shows a spectrum of a text shield or design. A special lens to protect the eye from laser damage can be used.

Dot-Matrix. A dot-matrix 1,000 dots per inch (DPI) effect is created in a computer and comprises engraving dots with a laser in a specific angle which a minimum density of 1200 to 2000 DPI's. It allows printing of micro text contained within a hologram with great precision and creates very precise 2D and 3D effects.

Hot Stamping. Hot stamping places a hologram on a document by thermal transfer. This hologram will interlace with a paper substrate and will not allow a hologram to be transferred from one document to another.

Moire Pattern. The moire pattern is a design-based pattern which superimposes two patterns with non-identical spatial frequencies. The effect is visually detected after utilizing a normal photocopier to reproduce the original pattern. The reproduced pattern induces a "moire" or aliasing which immediately suggests the reproduced image is counterfeit. The original is produced utilizing digital image technology which differs from normal photocopy technology. This effectively "tricks" the photocopier and reveals the moire in the reproduced pattern.

Hot Stamp Metalized Hologram. This feature is a visual/substrate-based feature which can also be machine readable. It uses a special metalized hologram (e.g., as found on various currencies) or a holographic hot stamp (e.g., that is non-machine readable). This feature comprises special stripes placed within the card laminations and visible to the eye. These holograms can be proprietary in order to limit the availability to counterfeiters. The metalized holograms can also be machine readable to verify authenticity. The security of this feature is high because to duplicate it, a counterfeiter must have access to both the card manufacturing equipment and the source of materials, which are both difficult to obtain.

Microprint: Offset Printed, Visual/Machine-Readable Text of Particular Size. The text is indecipherable without the use of a reading lens, and is usually incorporated as a single line. This feature is used to print misspelled words to fool counterfeiters who often assume complete and correctly spelled microprint. The offset printed text is located under a translucent lamination to protect it from abrasion. This feature is difficult to produce with clarity and resolution using a photocopier, scanner, or dye sublimation printer.

Microprint: Visual/Machine-Readable Text of Particular Size. This text is indecipherable without the use of a reading lens, and is usually incorporated to appear as a single line. This feature is used to print misspelled words to fool counterfeiters who often assume complete and correctly spelled microprint. This feature is difficult to produce with clarity and resolution using a photocopier, scanner, or dye sublimation printer.

Ultraviolet Fluorescence: Offset Printed, Visual/Machine-Readable Art or Text which Produces Light When Activated by an Ultraviolet Light Source. This feature is normally undetectable to the naked eye and can be overlooked by the casual counterfeiter. This feature is difficult to produce with easily obtained equipment. Special fluorescent colors are available for added security.

Light Pipe. This is a substrate based, machine readable feature requiring a light source to detect. This feature is produced using optical techniques which direct light to specific locations of the card (e.g., the edge). The effect is a brilliant light at a location different from where the light source is pointed, and usually in a specific color. Since this feature involves specific translucent materials and optical design of substrates, counterfeiters may never detect this feature. It is also almost impossible to recreate such a feature.

Laser Engraving. This visual substrate-based feature can be either tactile or subsurface depending upon the types of plastics employed. The feature can be either graphic or alphanumeric. Using a laser, a pattern or alpha numeric text is ablated into the sub-layers of a plastic card. Depending on the parameters of the laser system and the materials of card substrate, a tactile or subsurface mark appears. This feature is particularly effective in the serialization of cards to reduce the risk of lost or stolen cards. The mark cannot be "scraped off without noticeable damage to the card surface. A tactile surface is helpful in quick recognition of authenticity. Laser systems of such complexity are expensive and difficult to obtain.

Metalized Stripe. This stripe is a visual substrate-based feature which can also be machine readable. This feature uses a special metalized stripe (e.g., found commonly inside various currencies) or a holographic stripe (e.g., non-machine readable). These special stripes are placed within the card laminations and are visible to the naked eye. The special stripes can be proprietary in order to limit the availability to counterfeiters. The metalized stripes can be machine readable to verify authenticity. This level of security feature is high because counterfeiters need access to both card manufacturing equipment and the source of materials. These are both difficult to obtain.

Guilloche Pattern. This feature is an intricate pattern of curvilinear fine lines which were originally created by "engine turning," commonly used in currency design. This visual feature is design-based and commonly produced using offset printing onto plastic. It is normally contained under a translucent lamination which acts as protection from abrasion. The fine lines are difficult to reproduce with full clarity and resolution on a copier, dye sublimation card printer, or scanner/personal computer/inkjet system because the dye sublimation printer can print only onto the surface of the card.

Rainbow Guilloche. This feature is similar to the guilloche pattern above and is used in conjunction with a color spectrum which gradually changes from color to color achieving a continuous effect across the surface of the card. The level of security is slightly greater since use of a sophisticated color copier is required to duplicate the pattern effectively.

Cameo Effect. This feature is the result of cropping the background of an image with software to print only a silhouette of the person which makes it more difficult to replace than a square image. This effect is combined and interlaced with other security features, such as hidden infrared on the background of the picture, or interlacing a photo with guilloche patterns on the back.

Ghost Image. This feature provides the ability to print a second photo of a person, which is degraded by software, and it is printed on a faded gray or color scale over the personal data of the person to protect this information from tampering or altering. This effect is also achieved by software.

Types of Holograms.

Many different types of holograms with unique visual effects are utilized for commercial and security applications, as well as promotional products. In one embodiment, the present invention includes at least one of the following holograms:

Two Dimensional (2D) Hologram. This hologram lies on one single layer, which projects vivacity of color. With this technique, we convert standard color line artwork or photography into an array of holographic colors.

Three Dimensional (3D) Hologram. This hologram is created from a solid model or sculpture. The product's third dimension is captured. The design becomes a 3D image after the depth of the image is captured through the use of a sculpture. A logo or product will be seen without the need of special glasses or lenses.

Two/Three Dimensional (2D/3D). This hologram combines a superficial layer with other dimensional layers, which can be a combination of both technologies, as mentioned previously. One image produces multi-color levels because of the positioning of the various layers. This system adds a third dimension to pictures.

Line Artwork & Photographs. One embodiment of the present invention uses line artwork, photographs, or a combination of both, to create several layers of images separated by specific distances in order to give the illusion of depth. In general, two layers are enough, but if necessary, five different layers of images can be used.

Colorgrams. Also known as true color holograms, colorgrams usually use someone's photo. It is made up of photographic quality art-work. These holograms are surprisingly capable of displaying true colors of the object, like true human skin tones or the original colors of a flag. If a counterfeiter cannot get the original photo, they cannot duplicate the label. It is a good way to prevent counterfeiting. The colorgram system is similar to the 2D/3D system. Full-color photographs are reproduced in their true, original colors at a specific angle, usually at a 45 degree viewing angle. The system can combine photographs with line artwork at different layer levels.

Stereograms. Stereograms involve the latest in advanced technology. They are the result of a complex system that gathers full images, volume, movement, color and total animation. Total animation gives the sensation of the movement of a live recording.

Holomatrix™ from 50 DPI to 2000 DPI. This feature comprises microtext, optical variable effects, and computer-generated optical devices. Graphic images for this type of hologram are created with microdots. Each dot is an individual embossment made with a laser beam. This feature creates holograms through the use of sophisticated computer technology. The laser beam individually embosses each dot, creating a luminous image with a fascinating presentation of colorful optical effects. This technique prints small dots and is similar to a laser printer or inkjet system. These dots are holographic gratings that act like small prisms that sparkle intensely. With this system, optical patterns can be built of images in such a way that the images can be viewed at a 360 degree angle, and have multiple images in the same hologram. Because of the difficulty of reproducing these images, this feature is excellent for security applications.

Diffractive Optical Variable Image Devices. All the products classified as DOVIDs (Diffractive Optical Variable Image Devices) present an image which changes colors when tilted in various angles. This essential characteristic makes the Images impossible to copy or imitate by traditional printing and graphics software.

Optical Variable Devices. An optical variable device (OVD) is a way of printing an image in such a way that certain characteristics vary when viewed or illuminated from different angles.

Combined Holograms. These holograms combine two or more of the above mentioned types of holograms. Combining Holomatrix™ with any of the above types makes the hologram more complex and ideal for security applications.

Optional Tests. In one embodiment of the present invention, the identification mechanism is tested in multiple ways. Laboratory tests are used to demonstrate durability, tamper proof, temperature and humidity stability, abrasion resistance, adhesiveness and light stability to ensure durability of the identification mechanism and to ensure that the dyes will not fade or degrade before at least 5 years of extensive use. In addition, dual lamination can be performed.

One embodiment of the present invention can include at least one of the following tests.

Static Bending Test. In this test, a composite card is tested to exceed 100,000 bending cycles without breaking or losing its integrity.

Heat Test. In this test, a composite card is exposed for an extended period of time to intense sunlight, boiling water, and a temperature of up to 220 degrees Fahrenheit without twisting or bending.

Rigidity Test. In this test, multiple layers are applied to a composite card to give it rigidity so that when it is laminated it will not lose its flat shape, guaranteeing that the bar code is readable.

Durability Test. In this test, a card is placed in a steam pressure chamber at 160 degrees Fahrenheit for four days to test that the card will not warp or break, and that the over lamination will not come off.

Abrasion Test. In this test, a card is placed in an agitator containing a water and sand solution and subjected to 30 minutes of agitation.

Required Security Levels.

Multiple security levels exist and are explained below.

First Level Security Features.

First-level security features are clearly visible so that any attempts to modify the text data, photo image, or other personalized information is evident at a simple glance.

In one embodiment, the first-level security features include a complex hologram with multiple security features, combining a complex hologram structure with micro printing. The printer and the hologram are transferred through a holographic registration and a fiber optic sensor to assure very high accuracy. The holographic pattern is always transferred in the same position.

In one embodiment of the present invention, the hologram includes at least one of the following general features:

A highly integrated technology and expensive machinery is required for mass production. Only manufacturers with sophisticated know-how can maintain its quality.

The hologram makes the object visibly distinguished from other printing materials or those color copied.

Some types of hologram (e.g., Kaleidogram, Finegram) ensure more satisfying security features than of the flat types, since the most advanced equipment is necessary in the process of production.

In one embodiment of the present invention, reproduction features include:

A Transparent Kaleidogram with protective OP layer that is heat transferred on to the card book. It covers the entire printed area.

Attempts to remove the hologram layer will damage the composition of the hologram. Thus it cannot be reused, or tampered.

Combined with micro-letter printing, the reproduction by color copy or photomechanical process is not feasible, as the 0.26 mm size characters is ruined when reproduced. Additional first-level security features can be integrated with the RF identification mechanism (e.g., card) in the future. An example of such security features would be icons, symbols, or guilloches that could be printed in special solvent sensitive inks. These features can be printed directly onto the intermediate transfer layer. These security features could be employed at some time in the future if a solvent tampering technique is identified.

Overall, the proposed first-level security features provide the document with excellent protection against altering and falsification, as well as acts of counterfeiting. The features are readily visible and any attempts to modify the underlying information is evident at a glance.

Second Level Security Features. Second-level security features can also be included. These second-level security features are invisible to the eye under normal viewing conditions, and are evident only when using a proper detection device. In one embodiment of the present invention, at least one of the following features is included:

Invisible Ultraviolet-Fluorescent Features. The visible portion of the energy spectrum extends from deep blue at, for example, 400 nm to deep red at, for example, 700 nm. Long wavelength ultraviolet energy in the region of the spectrum for example, between 350 nm and 400 run, such as 380 nm, is used to excite an embedded ultraviolet-fluorescent material. These high-energy ultraviolet photons are absorbed by the fluorescent material that happens to be invisible or transparent in the 400 rim. to 700 nm region of the spectrum. The ultraviolet photons pump the absorbing material to excited energy states. The material in the excited states quickly relaxes back and releases the absorbed energy again in the form of photons. Because some of the energy is lost in this transition, the emitted photons have less energy than the absorbed photons. The visible portion of the energy spectrum is positioned at the lower energy photon levels. Consequently, the process results in visible light being emitted from the material when it is illuminated by ultraviolet light. In a darkened room, the eye detects the glow being emitted by the ultraviolet-fluorescent material but not the ultraviolet light that is used to excite the material.

Two-Dimensional Bar Code. The card solution can include a PDF-417 format barcode (two-dimensional barcode) that is printed onto the card. The PDF-417 barcode can hold several types of data (e.g., fingerprint minutiae, personal information).

RF Device.

An RF device can complement all the previously mentioned security features, as it has a unique identifier (e.g., a unique 64 bit serial number), and the information contained on it is protected by sundry cryptographic methods. The capacity of the device will allow a great deal of information about the holder to be stored on the device (e.g., fingerprint minutiae or other biometric template, the holder's biographical information, statistical information). Those experienced in the art will see that an RF device allows data to be written to and read from the device via an antenna without the holder having to present the document for verification through traditional methods such as visual inspection, or other method of machine reading.

Third Level Security Features.

Two optional security features can be changed every eighteen months: special IR-activated security taggant material and proprietary security taggant material.

Special Infrared-Activated Security Taggant Material.

A special ceramic compound (e.g., such as a product named Taggant, provided by Secure Products) is mixed with a clear ink media in very small concentrations. (The ceramic compound is referred to as Taggant, but those experienced in the art will recognize that other ceramic compounds or equivalent product can be used.) This mixture is printed on the intermediate transfer material surface. After being ground to small particles that are approximately 2-3 pm in diameter, the special ceramic compound appears to be a very fine white-colored powder. The combination of the white color, the small particle sizes and the low concentration causes the material to be invisible to the eye.

A low-power, eye-safe near-infrared laser can be used to activate the special IRactivated taggant material. The input

wavelength of the laser must be tuned within a 3-5 nm bandwidth in order to activate the material. The input energy is pumped into the material with the lower energy photons of the laser. The combination of the long lifetimes for the excited energy states and the high concentration of photons from the near infrared laser result in a second transition upward in energy level. In other words, two photons are absorbed by the material to increase the available excitation energy. These high excitation energy states relax releasing photons in the visible portion of the spectrum as well as the near-infrared portion.

This process of effectively adding two lower energy photons together to release a higher energy photon is called "up-conversion." The special IR-activated security taggant material has three separate emissions or security features. When an appropriate infrared laser, which is invisible to the eye, is focused on the special taggant material, three features are emitted simultaneously. These three features are a visible green spot at the point of focus, a visible blue spot at the point of focus, and an invisible infrared point at a higher energy level in the near infrared portion of the spectrum. When viewed by the eye, the green and blue spots blend together to create a vivid turquoise color. However, all three features can be detected automatically and separately with the proper equipment.

Proprietary Security Taggant Material.

A proprietary security taggant material can also be included in the card design. A special ceramic taggant material (e.g., such as the one produced by Secure Products) exhibits multiple security features and is in part based on the "up conversion" concept. The white powder is ground into particles that are 2-3 nm in diameter and is mixed into a clear ink media in very small concentrations. Again, as before, the combination of the white color, the small particle sizes and the low concentration causes the material to be invisible to the eye. However, this special material can be activated by several wavelengths and each activation wavelength results in a different response.

One characteristic and security feature is activated by a special low-power, eye-safe near-infrared laser. The activation bandwidth is approximately 3 nm and is located on the longer wavelength side of the activation energy required for the second-level feature. Laser devices are far less common in this area of the spectrum. When the special taggant is excited by a laser specially tuned to this excitation frequency and bandwidth, two separate emissions are observed. One emission is in the visible portion of the spectrum and can be observed as a green spot at the point of incidence. The second emission is in the near-infrared portion of the spectrum near the excitation wavelength of the first optional security feature.

A second characteristic and security feature is observed by using a second low power, eye-safe near-infrared laser at about the same excitation energy as the similar second-level feature. At this excitation wavelength, a green spot can be observed at the point of incidence due to the "up-conversion" process.

Finally, a third characteristic and security feature can be observed by applying energy in a wider bandwidth in the upper portions of the visible energy spectrum. This wavelength of energy is absorbed and re-emitted as longer wavelength infrared energy. In one embodiment, the initial implementation activities will focus on a verification process that utilizes a single excitation wavelength and a single observation wavelength. The implementation of the other embedded security characteristics can be phased into the program as new features are required to maintain the overall security of the card documents. Since these untapped security features and benefits will have existed in the documents from the initial issuance, the implementation of the new features will minimize the impact to the overall system.

In addition, new security features can be integrated into the present invention should the need arise.

D. Method of Using the General RF Identification System

FIG. **4** illustrates the methods of using the RF identification system **400**, according to one embodiment of the present invention.

In **405**, the identification information (e.g., fingerprint, picture) is written to a chip with an RF device. In **410**, the chip is then embedded on an identification mechanism (e.g., license plate, passport, card). In **415**, a user enters an area where identification information must be presented. In **420**, an RF reader/writer reads the identification information from the chip. In **425**, the user allows identification information to be taken (e.g., a fingerprint scan, an authority checks a user's face) and this information is compared to the chip data to verify the user's identity.

II. RF Registered Item and Method of Use

One embodiment of the present invention allows authorities to track information regarding a registered item (e.g., a vehicle), identify the item, and determine whether a driver of the item has the right to operate the vehicle. The present invention is described using the illustration of a license plate, but those experienced in the art will recognize that multiple other embodiments are possible, including, but not limited to: a sticker (e.g., a self-adhesive decal that can be placed on an automobile window, windshield or license plate), an RF embedded license plate (e.g., if the license plate is to be manufactured with some non-conductive material, the RF device can be embedded directly into the license plate), an encapsulated RF device (e.g., in the housing of a rear-view mirror, headlights or taillights, the vehicle's front or rear bumpers, or in any non conductive component of the vehicle; the device can be encapsulated in such a way that it will resist normal use and exposure to the elements, or embedded directly into the materials comprising the aforementioned placement media).

The present invention can be used, for example, for vehicle identification, border crossing solutions, traffic violations, insurance programs, pollution control, vehicle access control, traffic logistics planning and engineering, toll booths, and other vehicle control applications. The present invention takes centrally stored information and makes it accessible to the field (e.g., to police or other authorities). It also extends and expands the verification of individual and item (e.g., vehicle) information.

A. RF Registered Item

FIG. **5** illustrates an RF registered item **500**, according to one embodiment of the present invention. The registered item **500** includes the following components: A modulator **515** is a device that receives baseband signals from an antenna. An AC/DC converter **520** is a device that receives an alternating current (AC) and converts it to direct current (DC). An encoder **525** is a device for encoding information received so that it may be utilized by another device or protocol. A decoder **545** is a device that decodes information from the encoder output so it may be used by another device or display. A power control **550** is a device which regulates voltage and current to protect an apparatus from both power surges and low power. An instruction sequencer **530** is a device that queues instructions to be sent to the chip's internal memory. A security management unit **555** is a device that checks and validates the cryptographic keys that will be sent to the cryptographic block. A cryptographic

block **510** is a device that stores the security keys. These keys are checked and validated to grant or deny access to the memory chip. EEPROM memory **505** stores data. Information can be read and written from or to this device.

B. Method of Using RF Registered Item

FIG. **6** illustrates the method of using RF registered item **600**, according to one embodiment of the present invention. In **605**, individual identification information (e.g., fingerprint, picture) and/or vehicle identification information (e.g., registered vehicle, license number) are collected and written to an RF device (i.e., a chip with an RF antenna). In **610**, the RF device is embedded onto an identification mechanism, a license plate. In **615**, an authority wishing to check a vehicle uses an RF reader/writer to read the chip data. In **620**, the authority takes and compares the individual identification information (e.g., user's fingerprint, check user's face) and/or vehicle identification information (e.g., check make and model of vehicle, check vehicle license number) and to the chip data to verify an individual's identity and whether the individual has the authority to possess and operate the vehicle.

In one embodiment, a selective metalizing procedure is used to selectively metalize the areas which will not carry the RF device. This can be done by using a mask, as illustrated in FIG. **7**.

C. Method of Making RF Registered Item

In one embodiment, the identification mechanism (e.g., license plate) comprises a material that allows visual validation of the registration, even at night. The material can be a retro-reflective material, holographic foil, or another substrate with a high metal content.

FIG. **8** illustrates method of making RF registered item **800**, according to one embodiment of the present invention. In **805**, antennas are produced on a demetalized or selective metalizing process. In **810**, after demetalizing, resistance is decreased and conductivity is increased by applying inks containing silver or copper (e.g., conductive inks) In **815**, an adhesive layer is applied to the antenna in a Web environment or with automatic label capabilities.

In one embodiment of the present invention, at least one of the following is tracked:

Vehicle Identification Number (VIN). The VIN is the vehicle's international registration number and is the "fingerprint" of the car. Vehicle identification is performed by visually reading the car's VIN, and using the software to validate the VIN. This software allows a user to determine if the vehicle has been modified, altered, and/or stolen.

Owner Identification. Owner identification is made using photographic information (e.g., a photograph) and/or biometric information (e.g., a fingerprint, iris pattern) stored in the RF device.

Tracking Information. The RF device is used to read the VIN number and the owner's information. This can be used to identify a vehicle or individual reliably without having to connect to a central database.

Central Data Base. The central data base validates the identity information for increased security (e.g., tracking who and where the device was produced and who it belongs to).

D. Optional Security Features

In one embodiment of the present invention, at least one of the following security features is included:

Secure Device. In one embodiment, the device has: numerous (e.g., five) visual inspection security features visible only to the naked eye; numerous (e.g., three) nonvisual forensic security features that require a special device for detection; and at least one security feature requiring a special detection device that is proprietary (i.e., it was manufactured specifically for a particular client).

Secure Identification. This feature requires information contained in the device to be unalterable without a determination of who wishes to alter the information and for what purpose. Highly secure chips with a hardware programmable cryptographic block with credit and debit exchange keys is used in one embodiment of the present invention. In addition, the individual information of the vehicle (e.g., the VIN) and the personal information (e.g., biometrics) contained in the device must be protected. •Secure Transaction. This feature protects the device from the equipment that reads and writes from the device. This equipment must be initialized using the same encryption keys as the RF device.

Secure Data Base. This feature protects information in the central data base and the transaction log indicating where and for whom the device was produced. Central data base security is possible using encryption. This technology allows centrally-stored information to be taken to the field (e.g., to track the inspections for stolen vehicles). It also extends and expands the verification of both individual and vehicle identity.

III. RF Identification Mechanism and Method of Use

The present invention includes an RF identification mechanism, such as a passport, and a method of using the same. The present invention will be described in the context of a passport. However, those experienced in the art will recognize that the RF identification mechanism is not limited to a passport, and multiple other embodiments are available, including, but not limited to: a license, credit card, cell phone, etc.

A. RF Identification Mechanism

FIG. **9** illustrates an RF registered item **900**, according to one embodiment of the present invention. The registered item **900** includes the following components, as described earlier: a modulator **915**, an AC/DC converter **920**, an encoder **925**, a power control **930**, an instruction sequencer **940**, a cryptographic block **910**, a decoder **945**, a security management unit **955**, a memory **905**, and an antenna **935**.

B. Method of Using an RF Identification Mechanism

FIG. **10** illustrates a method of using the RF passport, according to one embodiment of the present invention.

In **1005**, identification information (e.g., a biometric template, photography, social security number, personal identification number) is collected and written to the chip on the RF device. In **1010**, the RF device is embedded on a passport. In **1015**, the user enters an area where a passport must be presented and an RF reader/writer reads the identification information from the RF device on the passport. In **1020**, an authority collects second identification information from the user (e.g., takes the user's fingerprint, looks at the user's face) and the information is compared to the RF device data to verify the user's identity.

C. Method of Making an RF Identification Mechanism

FIG. **11** illustrates how an RF passport is made, according to one embodiment of the present invention. In **1105**, the passport inlay is produced on a PVC substrate. A copper wire and chip are embedded into the passport inlay. In Ill **0**, the passport inlay is embedded into the passport document. In **1115**, the passport is printed using a holographic retransfer film and dye sublimation inverse printing. In **1120**, the RF passport identification information is matched to the person who owns the passport. In **1125**, the passport is

initialized, and personal information and/or biometrics are encoded on the passport to the RF device. This is done after the passport is personalized for security reasons. The RF passports are of no utility if they are stolen, as they need to be initialized with proper encryption keys and personalized.

IV. RF Communication Device and Method of Use

One embodiment of the RF communication device creates a communication through a network to a point of sale ("POS"). This is performed, for example, by a wireless RF device that stores a person's identification information, and can thus become a person's identification "document." This is discussed in the context of an RF cellular telephone, but those experienced in the art will recognize that any communication device, including but not limited to a personal digital assistant or a pager, can be used.

As a user with an RF cellular telephone approaches a POS with an RF reader/writer, the RF reader/writer identifies the user and obtains any relevant information stored on the RF cellular telephone. The user is then asked to enter authentication information (e.g., a fingerprint). If the user wishes to complete a transaction, the user enters the authentication information. An exchange of information via the RF reader/writer and the RF cellular telephone results in verification that the authentication information matches the RF cellular telephone information.

The present invention, referred to in one embodiment as an RF cellular telephone, creates a communication through a network of cells to a point of sale (POS). This is performed by combining Global System for Mobile Communication (GSM) technology with a wireless RF device that can store a person's identification information, including an electronic or biometric "signature" (e.g., fingerprint, facial, iris, or other recognition feature). GSM technology includes a compact chip located on the back of the telephone. The compact chip has an operating system. The GSM telephones identify the telephones to a network carrier to avoid, for example, telephone cloning.

The RF cellular telephone can thus become a person's identification document (e.g., passport, boarding pass) and/or credit card or other card (e.g., mileage cards). Multiple types of information can be carried and stored on the RF cellular telephone. The following uses are examples of how the RF cellular telephone can be used: an RF cellular telephone can be used as a substitute for credit cards, transforming the cellular telephone into the media of commercial transactions and transform telephony into the identification media for commercial establishments or authorities; an RF cellular telephone can be a personal identification or a Portable Data File (PDF); an RF cellular telephone can be integrated with a Global Positioning System (GPS) receiver; an RF cellular telephone can be integrated with hand held devices to provide Internet access, and access to business and personal information (e.g., email); and an RF cellular telephone could be a boarding pass (e.g., e-ticket) and/or could track a user going through security with authentication by fingerprint at a gate or other local area. Those experienced in the art will recognize that there are multiple other examples and uses of the RF cellular telephone.

One embodiment of the present invention provides at least one of the following benefits: assists in avoiding current credit card fraud, through donation, substitution of identity, or counterfeit documents; reduces or eliminates the need to carry credit cards, documents (e.g., a boarding pass) or other information; reduces or eliminates the need for an entity to issue or update credit cards or identification documents (e.g., tickets), with associated fees (e.g., mailing costs); and reduces or eliminates the need to stand in line or wait for services.

The present invention is discussed in the context of using a fingerprint for identification, as this is a widely recognized identification tool. However, those skilled in the art will recognize that any type of identification information (e.g., Personal Identification Number (PIN)) or any other biometric identifier (e.g., a voice print, iris recognition, facial recognition) could be used.

A. RF Communications Device System

FIG. **12** illustrates an RF communications device system, according to one embodiment of the present invention. The system includes an RF cellular telephone **1205** and a point of contact (POC) or point of sale (POS) **1210**.

The POS **1210** can include an RF reader/writer **31** and a fingerprint digital scanning device **1232**. One-to-one verification ensures that the information on the RF cellular telephone matches the holder of the RF cellular telephone.

The RF cellular telephone **1205** can include the following: a fingerprint identifier **1221** (e.g., an Application Specific Integrated Circuit (ASIC) chip, which is a chip that is designed specifically to run fingerprint matching software on an operating system); and an RF device **1222** (with an antenna in the chip) to store identification information. In an alternative embodiment, the RF cellular telephone can include a fingerprint digital scanner **1223**. As mentioned earlier, this could either be included on the RF cellular telephone, or on a fingerprint digital scanning device at the point of contact.

One embodiment of the RF device **1222** includes a chip and an RF antenna, as described herein. One embodiment of the chip is illustrated in FIG. **13**. The chip is a passive chip that is secure. These chips have a power unit converter and are secure. The e-prompt **1348**, the memory of the chip, is totally separated from the rest of the communication, so if the security requirements are not met, a user cannot access the memory of the chip. The chip includes an ACDC converter **1341** and a connection to an RF antenna for power using a power supply control unit **1345**. The chip communicates with information stored on the telephone by coupling to an input device in the cellular telephone. A modulator **1342** is a device that receives baseband signals from an antenna. An AC/DC converter **1341** is a device that receives an alternating current (AC) and converts it to direct current (DC). An encoder **1343** is a device for encoding information received so that it may be utilized by another device or protocol. A decoder **1344** is a device that decodes information from the encoder output so it may be used by another device or display. A power control **1345** is a device which regulates voltage and current to protect an apparatus from both power surges and low power. An instruction sequencer **1347** is a device that queues instructions to be sent to the chip's internal memory. A security management unit **1346** is a device that checks and validates the cryptographic keys that will be sent to the cryptographic block. A cryptographic block **1349** is a device that stores the security keys. These keys are checked and validated to grant or deny access to the memory chip. EEPROM memory **1348** stores data. Information can be read and written from or to this device.

In an embodiment of the present invention, the chip carries authentication information (e.g., fingerprint) and transaction information (e.g., credit card information, airline, or hotel mileage card information). The RF cellular telephone also may include a cryptographic programmable block chip **1349** to enhance security.

B. Method of Using an RF Communications System

FIG. **14** illustrates method of using an RF communications system **1400**, according to one embodiment of the present invention. The present invention connects to a local POS, rather than a cellular carrier. Instead of a POS device obtaining credit card information via, for example, a magnetic stripe, the present invention, via an RF embedded on a cellular telephone, provides information to the POS, which has an RF reader/writer. In addition, the POS may include a device (e.g., a fingerprint reader) to verify that the holder of the RF cellular telephone is the owner of the RF cellular telephone. The fingerprint, or other identification feature, can be stored, for example, in the Chip, or at a remote location, for example, which is accessed by the POS device. Thus, for example, the store could run a one-to-one local verification of a user's identification by having the user imprint their fingerprint into a fingerprint reading device. The identification information, such as a fingerprint, is a string of information. That information is stored on the Chip. When the user puts a fingerprint on the POS fingerprint reader, the present invention will determine if the fingerprint matches the information stored on the RF cellular telephone. In an alternate embodiment, the user could imprint their fingerprint into a fingerprint reading device included on the RF cellular telephone.

According to FIG. **14**, in **1405**, a user carries an RF cellular telephone and approaches an RF reader/writer (e.g., in a hotel), which is continuously scanning. The RF reader/writer connects to the network (e.g., the Internet), identifies the user, and obtains relevant transaction information (e.g., credit card information and hotel rewards card information).

In **1410**, the customer purchases a service or product and is prompted to enter authentication information (e.g., a fingerprint). In **1415**, if the user wishes to complete the transaction, the user enters authentication information (e.g., imprints a fingerprint into a fingerprint scanner) and it is loaded to the RF device.

In **1420**, the RF reader/writer and RF cellular telephone are used to verify the authentication information (e.g., the fingerprint scanner works with the RF reader/writer and the RF cellular telephone and/or other devices to ensure the customer's fingerprint matches the fingerprint stored on the RF cellular telephone) and this information is presented to a point of sale or access control device to retrieve purchase information.

Although the present invention has been described in the context of a POS, those skilled in the art will recognize that a user could use the RF cellular telephone without a POS. For example, a user could call a telephone number to buy a ticket to access a stadium, using identity verification and other transmitted information. As another example, a user could load a boarding pass or ticket to an event on an RF cellular telephone, and the boarding pass or ticket would be confirmed at an access control device around the perimeter of an airport lounge or stadium.

Additional information related to the present invention can be found in U.S. patent application Ser. No. 10/118,092, filed Apr. 2, 2002, and PCT Patent Application IB0201439, filed Apr. 30, 2002, which are herein incorporated by reference.

V. System and Method for Border Crossing Control

One embodiment of the present invention provides a border crossing control mechanism using RF technology. This technology helps provide a flexible, efficient, and effective border crossing security system to meet the needs of rapidly changing security conditions. The present invention provides heightened security while at the same time efficiently and quickly moving vehicles and people across borders and through customs. In this embodiment, an identification mechanism (e.g., a laser card) is integrated with a vehicle decal that registers and matches any shipping components (e.g., drivers, vehicles, containers). The shipping components will be pre-registered in the decal at a point of origin. A fingerprint biometric of the driver is written into the identification card and the decal at the factory. An RF antenna embedded into the decals allows tracking of, for example, the driver, cab and trailer, and validation of these components at strategic checkpoints. It also provides for designated routing through the port for inspection and clearance prior to departing the port.

The present invention can be used in a closed system or open system. In a closed system, all information resides on the RF laser card and RF decals. In an open system, information is passed from the point of original to country A's custom's inspectors, and from country A's customs inspectors to Country B's customs inspectors using a network (e.g., the Internet). This makes integration and implementation easier.

A. Border Crossing Control System

FIG. **15** illustrates border crossing control system **1500**, according to one embodiment of the present invention.

The system **1500** includes at least one client **1505**, application server **1510**, database **1515**, RF identification mechanism **1520**, RF device **1525**, RF reader/writer **1530**, connected by a network **1520**.

Client.

According to one embodiment of the present invention, clients are any computers (e.g., PC, PDA, cellular phone) connected to a network (e.g., LAN [Local Area Network], WAN [Wide Area Network], VPN tunnel [Virtual Private Network Tunnel], Internet).

Application Server.

According to one embodiment of the present invention, an application server is used (e.g., an Oracle9iAS integrated into a J2EE application server). The application server can support web application software, wireless, web page caching, business intelligence features, and offer complete integration in a single product. The application server can also offer scalability, reliability, and security features. It can also include advanced clustering features to keep critical applications up and running 24×7; offers zero downtime and planned downtime through a fast start fault recovery architecture; and recover from incidents quickly and gracefully.

In the example embodiment of an Oracle9i application server, the high availability infrastructure includes Oracle9iAS Web Cache clusters, Oracle HTTP Server (Apache), and Oracle9iAS Containers for J2EE. In addition, database applications hosted on Oracle9i Application Server can take advantage of Oracle9i Real Application Clusters (RAC) to make them more available. Oracle9i Application Server is the middle-tier deployment platform for all applications developed using Oracle9i Developer Suite. All applications can be deployed on the same middle-tier. Oracle9i Developer Suite is a complete and standards-based set of development tools. The suite includes Oracle9iAS Developer, Oracle's flagship J2EE and XML development environment that supports the full development life cycle of J2EE applications and Web services. It also includes Oracle9i Forms Developer for easily and quickly construct sophisticated database forms and business logic delivered through any Internet browser as a high performance, rich Java client.

Database.

In one embodiment, the present invention uses a database with real application clusters (RAC) that can transparently scale and protect packaged applications with no changes necessary for the application (e.g., Oracle9i). RAC can scale all applications and also provides superior data protection with hot failover in less than 30 seconds.

According to one embodiment, the database provides a unique combination of scalability and availability in the same clustered database solution. With RAC, efficient scaling can be accomplished by simply adding servers to the overall cluster as the demand grows. Since RAC databases can grow flexibly, applications are protected from having to purchase excess computing power at a premium price. A RAC database can have costs significantly lower than the same solution implemented on an SMP (Symmetric Multi Processing) machine.

The database may include security and manageability features. The security features include: a Virtual Private Database (VPD); fine-grained auditing; data encryption.

The VPD technology provides programmatic row-level security and is enabled by associating tables or views with centrally defined access control policies. VPD addresses the application bypass problem and ensures that the same access control policy is enforced whether a user gains access to data through an application, ad hoc tool or SQL *Plus. As a result, multiple communities of users can securely share data within the same database.

Fine-grained auditing allows businesses to audit database activity by statement, system privilege, object or user. Its enhanced fine-grained auditing functionality enables organizations to centrally define specific audit policies that alert administrators to data access misuse. Audit records, stored within the database, capture the user statement's exact SQL text and can be easily viewed through ad hoc queries.

Data encryption is the ability to natively encrypt data in the database, enabling applications to guard sensitive data. Server-based encryption supports industry-standard Data Encryption Standard (DES) and Triple-DES (3DES), in both two and three key modes for any organizations who require the strongest level of encryption. Encryption can also support the MD5 secure cryptographic hash to ensure data integrity and a Federal Information Processing Standard (PIPS) 140-certified random number generator for generating secure encryption keys.

The manageability features include intelligent self-managing and tuning. The database can enhance database manageability by automating routine tasks, reducing complexity of administration and making the database more self-tuning and self-managing. Features can be added to streamline space, memory, and resource management as well as other day-to-day database administrative tasks.

RF Identification Mechanism, RF Device, and RF Reader/Writer.

One embodiment of the present invention comprises: an RF identification mechanism (e.g., an RF laser card), RF decals containing a Chip (e.g., a 2K bit chip or data memory circuit) with contactless read/write capabilities and an integrated RF antenna (e.g., a 13.56 MHz RF antenna); and an RF reader/writer.

Multiple Chip Background Information.

Often multiple frequencies are used. This takes advantage of the best electromagnetic and electrostatic characteristics of certain frequencies, one for long range reading and the second for field penetration (e.g., rain). Multiple frequencies can be created using a dual modulator that can switch in milliseconds from one frequency to another. (See FIG. **16**.)

In one embodiment of the present invention, instead of, or in addition to incorporating the chip on the RF identification mechanism (e.g., RF smart laser card or RF decal), a chip can be embedded on a car windshield for smart windshield applications for vehicle registration, manufacturing, distribution of traffic violations, or any operation that requires contact with certain authorities. In this embodiment, the RF antenna can be used as radio antennas embedded on glass with copper wire during the manufacturing process, and connected to a module or embedded in the glass itself.

The resonant frequency of the antenna circuit in the RF device can be given by solving this equation:

$$f = \frac{1}{2\pi\sqrt{LC}}$$

f=frequency (Hz)
L=inductance (H)
C=capacitance (F)

The frequencies at the poles are parallel resonant frequencies, and depending on the technology can be:

f_1=13.56 MH_z
f_2=915 MH_z

$$L = \frac{N^2\mu_o A}{1}$$

N=number of windings around inductor
μ_o=permeability of freespace (Hm^{-1})
A=cross-sectional area of inductor (m^2)
L=length of inductor (m)

The inductance "L" depends on the number of turns of the coil, of the area perpendicular to the coil and of the permeability of free spaces and length of the coil. Therefore:

$$l = \frac{N^{-2}\mu_o A}{l} \Rightarrow$$

$$\frac{N^2\mu_o A}{l} \quad \frac{l}{f^2 4\pi^2 C} \Rightarrow$$

$$l = f^2 4\pi^2 N^2 \mu_o A$$

For substitution, the following values are used:

L_1=2.931×$10^8 H$

L_2=6.437×$10^{10} H$

The data signal between the antenna and the tag is modulated by amplitude and coded by a Manchester encoding. Thus, manchester data=NRZ data 1\ (NRZ clock).

Multiple RF Chip Overview

FIG. **17** illustrates an overview of the chip, according to one embodiment of the present invention. As described in detail above, the chip includes: an AC/DC converter (915 MHz) **1705** and accompanying power supply control unit **1715**; a modular **1710**; a codifier **1720**; an AC/DC converter (13.56 MHz) **1745** and accompanying power supply control unit **1750**; a decoder **1740**; a security administrator **1755**; an instruction sequencer **1730**; a cryptographic block **1725**, and memory **1735**.

B. Method of Using a RF Border Crossing Control System

FIG. **18** illustrates method for using an RF border crossing control system **1800**, according to one embodiment of the

present invention. In **1805**, an RF decal is issued at the point of origin for each shipping component (e.g., tractor/cab; trailer/bed; containers). In **1810**, data is written to the embedded chip using a computer (e.g., a PC) located at the point of origin. Electronic forms can be used to ensure consistency, accuracy and completeness in the information gathering and decal Issuance process. Information includes: specific details for identification and verification of the tractor, trailer, and containers; specific information on the driver including photo and biometric information (e.g., fingerprint); time stamp of when the driver, tractor, trailer, and containers leave the point of origin.

In **1815**, a certified official (e.g., company official, customs agent) applies the RF decal to the shipping components (e.g., cab, trailer, containers) at the point of origin or other appropriate place. In **1820**, the driver's personal data and shipment information are written to the driver's RF identification mechanism (e.g., laser card) at the point of origin or other appropriate place.

In **1825**, at the point of entry or other appropriate place, RF antennas automatically read the RF decals as the vehicle approaches the custom's station and displays the data. A display screen on a computer (e.g., PC, PDA) in the customs area displays a reading of each RF decal as they pass within X number of feet of the antennas. The computer validates each RF decal by providing identification information (e.g., driver's photo, fingerprint, other data input at point of origin.) In **1830**, the driver presents his RF laser card to a custom's officials at the point of entry (or other appropriate place) for validation and shipment verification. In **1835**, the customs agent clears the shipping components for entry/exit and inputs this approval information to the RF card and RF decal. If the vehicle requires additional customs inspections, the customs agent will assign the next inspection station information to the driver's RF card and RF decals.

In **1840**, as an additional option, at the conclusion of the customs inspection process, and after all approval data is written to the RF decals, a final check is conducted at the port exit or other appropriate place. As the vehicle approaches the exit point, the RF decals are read for the final check to ensure all have matching data. This will be proof that the vehicle passed through all required checkpoints, inspections, and processing. As with the point of entry, each RF decal is read in sequence and the information is displayed to the custom agent's display screen. If any RF decal information does not match, the display will indicate a stop and the vehicle will be stopped for additional inspection or validation.

VI. System and Method for Limiting Software Downloads

One embodiment of the present invention relates to a de-metalizing edging process, and various resultant combinations of embedded processor chip, antenna, metallic hologram, integrated circuit, and substrate form factors to produce an end product (e.g., smart card or smart label). This enables RF communication within a networked system configured for various identification and verification applications. These security RF smart labels can be adapted to the identification and data capture requirements associated with unique software media or packaging of any software publisher, ISV or manufacturer.

A. System for Limiting Software Downloads

FIG. **19** illustrates system for limiting software downloads, according to one embodiment of the present invention. The system includes a RF read/write device, an RF smart label with a chip and RF antenna, and the software.

The software media (e.g., a CD) and/or package carries an RF smart label, containing an RF antenna providing a link to a chip **1900**. The chip has encryption and read/write capabilities. Access is controlled through a certificate of authenticity **1910**. Working in combination with an RF reader/writer, the present invention will capture any available unique digital central processing unit (CPU) or processor number and read/write to an original certificate of authenticity. The system locks the certificate to the CPU or processor, and will not allow this unique software to be installed on any machine other than the one on which it was initially authorized to be loaded. This highly secure encrypted solution can also be used to control access to customer support, debugs, updates and other services via the network (e.g., Internet) for authentic paid software licenses only. As described above, the chip includes a modulator **1905**, encoder **1965**, decoder **1940**, instruction sequencer **1915**, cryptographic block **1920**, converter **1920**, power control **1945**, security management **1950**, memory **1955**, and antenna **1960**.

VPN Tunnel Mode.

The present invention can be incorporated into a network, such as a Virtual Private Network (VPN). A VPN is a private data network that makes use of the public telecommunication network or Internet infrastructure, maintaining privacy through the use of security and authentication procedures. A VPN is the emulation of a virtual private Wide Area Network (WAN) facility using Internet Protocol (IP) facilities. The VPN may use many aspects of networking, such as IP addressing, advertising reach ability, Quality of Service (QoS), data security and access control.

FIG. **20** illustrates a VPN tunnel mode solution, according to one embodiment of the present invention. A database **2005** is connected to a security gateway **2015**, which is connected to an application server **2010**, connected to the client **2025** through a network **2020**. Tunnel mode is used when one or more IP clients need to communicate to a main computer or server computer. The tunnel mode utilizes data encryption and key management. The VPN end points monitor the operation of the VPN tunnels (VPN clients) to ensure the connectivity has not been lost, and take appropriate action if there has been a failure. This is very important because all applications are dependent.

The present invention utilizes features that provide high-quality, interoperable cryptographic base security for access central information. For example, two traffic protocols are used: an Authentication Header (AH) that provides data integrity; and an Encapsulation Security Payload (ESP) that provides confidentiality (e.g., encryption of data), data integrity, and thought use of cryptographic-key management procedures. ESP is known as an Internet Key Exchange (IKE) protocol. This protocol negotiates the security association between two end points and exchanges keys between them.

There exist two operation modes for both AH and ESP: transport mode and tunnel mode. Transport mode is used to authenticate information transmitted between nodes or machines (e.g., computers, servers) on a WAN/LAN network. Tunnel mode is used for communication between two or more end points that pass through a public network (e.g., the Internet). Tunnel mode is used to provide more security for information accessed by remote users or applications.

FIG. **3**A illustrates the differences between transport mode and tunnel mode. The use of AH and ESP are illustrated in FIG. **38**.

B. Method of Limiting Software Downloads

FIG. **21** illustrates method for limiting software downloads to authorized users **2100**, according to one embodiment of the present invention. In **2105**, a software license is

issued with an RF device (including a chip with an RF antenna) to an authorized user for one computer. In **2110**, when the user installs the software on a computer (e.g., computer #**1**), the RF device reads the computer's serial number from computer #**1**. In **2115**, if the chip information on the RF device matches the information on computer #**1**, the software is installed. In **2120**, as the software license in this case is for only one computer, the software will not be able to be installed on other computers until the software is removed from computer #**1**, when the serial number from computer #**1** is erased. In an alternate embodiment, where a license is granted for X number of users, only X number of computer serial numbers will be able to be checked by the RF device, and thus only X users can download the software.

In additional embodiments, use of other unique identifying characteristics associated with other computer components (e.g., mouse, motherboard or central processing unit cabinet), can be utilized. In a further embodiment, the present invention is used for multi-license and corporate environments. In these cases, where an authorized corporate licensing entity with a registered billing address has access to software through a network (e.g., the Internet), the RF device limits the download of software to the number of users or units authorized under the license agreement. The present invention can control downloads to any computer, including central servers or individual PCs. This simple, yet highly secure kit locks the number of each CPU or processor for the central server and the PCs to the authorized number of users for each version of software, thus providing a seamless, secure upgrade capability. In an additional embodiment, the present invention provides an adapted PDA to provide additional support for software distribution and inventory control, as well as instant legal software authentication for law enforcement and industry piracy control.

VII. System and Method for Airport Security

The present invention is a scalable, end-to-end RF identification system for airport and air transport security and addresses, for example, the following issues: establishes the actual identity of a passenger; runs a hot file fingerprint search against the INS, CIA, INTERPOL, FBI databases; links passenger to boarding pass and checked/handheld baggage; cross-verifies passenger identification at strategic points within the airport environment; cross-verifies stowed baggage with boarded passengers; track individuals within the airport; highly secure, cost effective, and non-intrusive; enables speedy and accurate passenger processing. In a security system that ultimately extends to existing airline and government computer systems and databases, the present invention is the "final link" that allows designated security personnel to track and validate on the spot the status of persons or items throughout the airport environment.

While the invention is described in the context of airport security, those experienced in the art will see that any facility (e.g., train station, ship, company campus, university campus) with a need for security can use the present invention, and the present invention is not limited to use in an airport facility.

A. Airport Security System

FIG. **22** illustrates a chip of an airport security system, according to one embodiment of the present invention. The present invention includes: an RF reader/writer; and an RF identification mechanism (e.g., RF boarding pass, RF luggage tags, RF identification cards) including an RF device. Alternatively, AFIS verification scanners, security and control software, and distributed databases can be included.

The RF reader/writer can comprise computer system components (e.g., remote readers/writers, verification scanners, client/server or thin client systems and networks, and application software and databases).

The RF device contains an integrated computer chip and RF antenna for contactless communication at an operating frequency of, for example, 13.56 MHz.

The chip contains unique identifying data for persons or items subject to scrutiny, and can be read by nearby security or other control personnel with handheld or stationary RF reader/writer or RF reader/writer devices for real time validation. Furthermore, the RF device is manufactured with light diffraction and other high security print features that eliminate document forgery and enable instant visual verification of authenticity. The RF device also includes an integrated AFIS digital fingerprint capability. The present invention can also use other unique identifying characteristics associated with additional elements of the air transport industry, including cargo, flight services, maintenance, and aircraft parts.

As described above, the chip has a memory **2205** (e.g., 2 k), an option hardware wired cryptographic block **2210** (with 4 exchange encrypted keys with up to 256 bits), a modulator **2215**, a converter **2220**, an encoder **2225**, a power control **2230**, an instruction sequencer **2260**, a decoder **2245**, a security management unit **2255**, a memory **2205**.

B. Method of Airport Security

FIG. **23** illustrates a method of airport security, according to one embodiment of the present invention. In **2305**, to facilitate air travel security, passengers are issued an official RF air travel identification card (e.g., with a photo and fingerprint scan) by a federal authority or the airlines following an agreeable level of background check. This process could be as simple as checking names verified by some acceptable identification (e.g., drivers' license, passport) against a networked hot list. The identification data is read and locked to the RF air travel identification card. During processing and prior to issuance, applicants' biometrics are processed and compared with a "one-to-many" hot list. With a successful security check, the applicant is issued a highly secure identification document with unique visual, biometric, and descriptive data that can be quickly verified throughout the airport and across the air travel system. A similar process would be applied to airport, airline, and service personnel. Those experienced in the art will note that a general RF identification card or mechanism (e.g., PDA) can be used instead of specific air travel RF identification card.

In **2310**, a passenger presents the RF air travel identification card or other RF identification mechanism to the airline authority when traveling. In **2315**, the agent scans the RF air travel identification card. In **2320**, the RF boarding pass and RF baggage tags are printed for the passenger. The boarding card now contains all data and tracking mechanisms required for secure passenger access to the gate and the matching aircraft, as well as boarding verification. In an alternative embodiment, instead of issuing an RF boarding pass, the RF air travel identification card can also contain e-ticket information. In parallel to the issuance of the boarding pass, identity information is captured by the system and digitally copied, together with the relevant travel route and destination data onto the RF baggage tags. The RF baggage tags are printed through systems and printers enhanced with an RF identification write device. The RF baggage tag now contains all data and tracking mechanisms required to link passenger, bag, and flight, thus enabling verifiable passenger/baggage/flight cross-referencing to the matching aircraft.

CONCLUSION

Additional advantages and novel features of the invention will be set forth in part in the Attachments that follow, and in part will become more apparent to those skilled in the art upon examination of the following or upon learning by practice of the invention.

What is claimed is:

1. A mobile device, comprising:

short range radio frequency (RF) circuitry;

memory configured to store biometric authentication information and payment information;

a biometric module configured to read biometric information;

an authentication module configured to determine whether the biometric information read by the biometric module corresponds to the biometric authentication information stored in memory; and

a secure module configured to:

generate a key when the biometric information read by the biometric reading device is determined by the authentication module to correspond to the biometric authentication information stored in memory;

encrypt the key and the payment information stored in memory; and

provide, via the short range RF circuitry, the encrypted key and payment information for use in a transaction.

2. The mobile device of claim **1**, wherein the biometric module is configured to read biometric information provided by a user to complete the transaction.

3. The mobile device of claim **1**, wherein the payment information is associated with a primary account number.

4. The mobile device of claim **1**, wherein the secure module is configured to provide the encrypted key and payment information to a point of sale (POS) device.

5. The mobile device of claim **1**, wherein the biometric authentication information is stored separately from the payment information.

6. The mobile device of claim **1**, wherein the payment information is stored in a memory accessible only by the secure module.

7. The mobile device of claim **1**, wherein the short range RF circuitry comprises a radio frequency identification (RFID) device.

8. A system, comprising:

a mobile device, comprising:

short range radio frequency (RF) circuitry;

memory configured to store biometric authentication information and payment information;

a biometric module configured to read biometric information;

an authentication module configured to determine whether the biometric information read by the biometric module corresponds to the biometric authentication information stored in memory; and

a secure module configured to:

generate a key when the biometric information read by the biometric reading device is determined by the authentication module to correspond to the biometric authentication information stored in memory;

encrypt the key and the payment information stored in memory; and

provide, via the short range RF circuitry, the encrypted key and payment information for use in a transaction; and

a point of sale (POS) device configured to:

receive, from the secure module, the encrypted key and payment information; and

transmit, to a central database, the encrypted key and payment information; and

a central database configured to validate the key and the payment information.

9. The system of claim **8**, wherein the biometric module is configured to read biometric information provided by a user to complete the transaction.

10. The system of claim **8**, wherein the payment information is associated with a primary account number.

11. The system of claim **8**, wherein the POS device includes an RF reader.

12. The system of claim **8**, wherein the biometric authentication information is stored separately from the payment information.

13. The system of claim **8**, wherein the payment information is stored in a memory accessible only by the secure module.

14. The system of claim **8**, wherein the short range RF circuitry comprises a radio frequency identification (RFID) device.

15. A method for secure transactions using a mobile device, comprising:

storing biometric authentication information and payment information in memory;

reading biometric information using a biometric reader;

determining whether the biometric information read by the biometric reader corresponds to the biometric authentication information stored in memory;

generating a key when the biometric information read by the biometric reader is determined to correspond to the biometric authentication information stored in memory;

encrypting the key and the payment information stored in memory; and

providing the encrypted key and payment information for use in a transaction.

16. The method of claim **15**, further comprising reading biometric information provided by a user to complete the transaction.

17. The method of claim **15**, wherein the payment information is associated with a primary account number.

18. The method of claim **15**, further comprising providing the encrypted key and payment information to a point of sale (POS) device.

19. The method of claim **15**, wherein the biometric authentication information is stored separately from the payment information.

20. The method of claim **15**, wherein the payment information is stored in a memory accessible only by a secure module.

21. The method of claim **15**, wherein the payment information is provided using a short range RF circuitry.

* * * * *