US006141436A

United States Patent [19]

Srey et al.

[11] **Patent Number: 6,141,436**

[45] **Date of Patent: Oct. 31, 2000**

[54] **PORTABLE COMMUNICATION DEVICE HAVING A FINGERPRINT IDENTIFICATION SYSTEM**

[75] Inventors: **Lena Srey**, Chicago; **Mark William Podl**, Bartlett; **Kevin D. Kaschke**, Hoffman Estates, all of Ill.

[73] Assignee: **Motorola, Inc.**, Schaumburg, Ill.

[21] Appl. No.: **09/047,773**

[22] Filed: **Mar. 25, 1998**

[51] **Int. Cl.**[7] **G06K 9/00**; G07D 7/00

[52] **U.S. Cl.** **382/124**; 340/825.34

[58] **Field of Search** 382/124, 125, 382/127; 380/23, 30; 340/825.34, 825.69, 825.72; 348/552

[56] **References Cited**

U.S. PATENT DOCUMENTS

4,099,033	7/1978	Murray	179/90
4,358,640	11/1982	Murray	179/90
4,577,345	3/1986	Abramov	382/124
5,591,949	1/1997	Bernstein	235/380
5,838,306	11/1998	O'Connor et al.	382/124
5,870,672	2/1999	Stoddard et al.	455/410

FOREIGN PATENT DOCUMENTS

5-095329	4/1993	Japan	H04B 7/26

OTHER PUBLICATIONS

StarTAC™90 Wearable Cellular Telephone User Manual, 1995, Motorola, Pan American Cellular Subscriber Group, 600 North U.S. Highway 45, Libertyville, Illinois 60048, pp. 2, 3 and 84–99.

Primary Examiner—Jose L. Couso
Assistant Examiner—Shawn B. Cage
Attorney, Agent, or Firm—Kevin D. Kaschke; Paul J. Bartusiak

[57] **ABSTRACT**

A portable communication device (**100**, **300**, **400**, **500**) comprises a fingerprint identification system (**709**) including a scanner (**115**) for scanning a fingerprint (**123**) of a finger (**121**) to generate an image of the fingerprint (**123**). In a first embodiment, the scanner (**115**) is positioned relative to a switch (**201**) on the device (**100**, **300**, **400**, **500**) to permit the finger (**121**) to generate the actuation force for the switch (**201**) when the fingerprint (**123**) is positioned on the scanner (**115**). In a second embodiment, the scanner (**115**) is ergonomically positioned on a housing (**113**, **117**, **119**) of the device (**100**, **300**, **400**, **500**) where the finger (**121**) or a thumb naturally rests on the housing (**113**, **117**, **119**) when the person holds the housing (**113**, **117**, **119**) while the device (**100**, **300**, **400**, **500**) is in use. In a third embodiment, a transmitter (**205**) of the device (**100**, **300**, **400**, **500**) transmits data representative of the image of the fingerprint (**123**) to a remote site (**715**) when data representative of the image of the fingerprint (**123**) does not match data representative of a reference fingerprint.

5 Claims, 7 Drawing Sheets

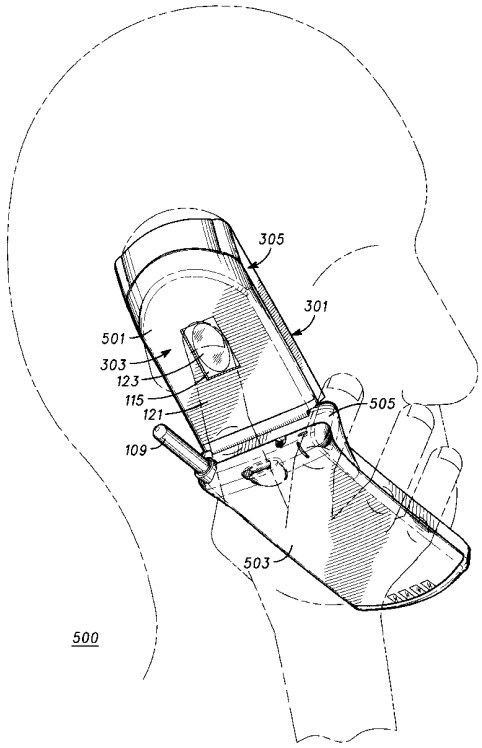

APPLE 1006

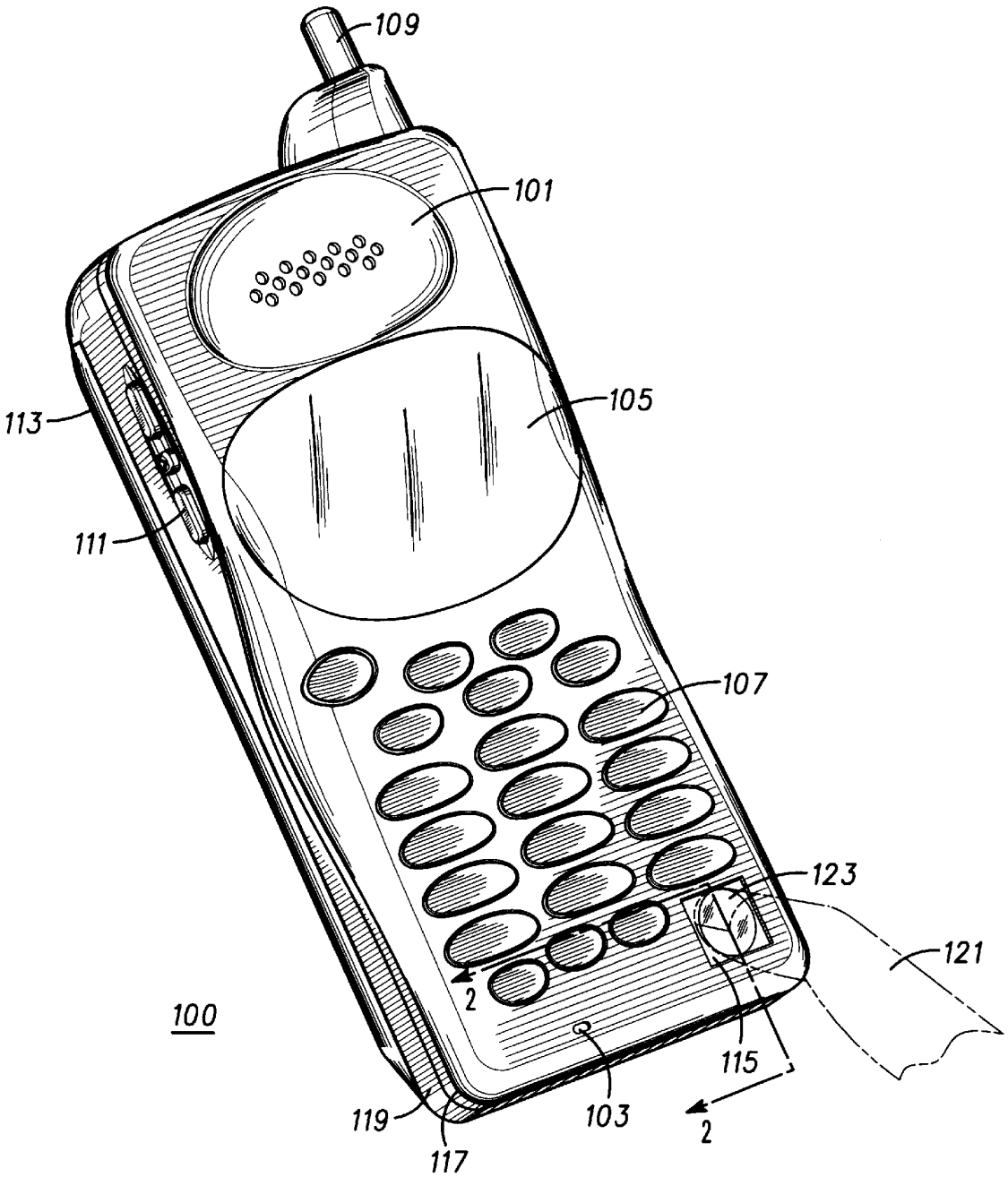

FIG.1

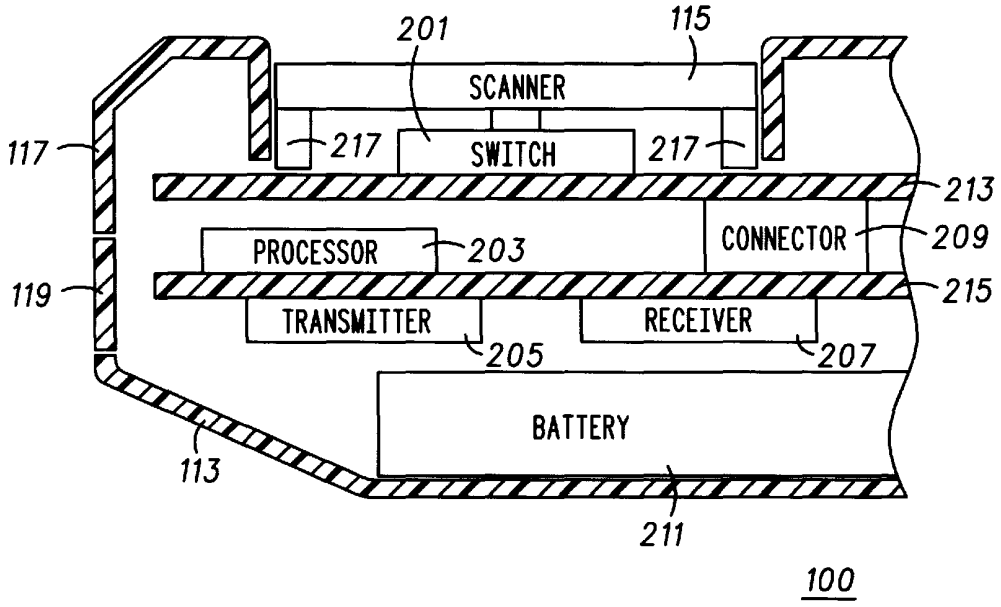
201
115
SCANNER
117
217
SWITCH
217
213
PROCESSOR
203
CONNECTOR
209
119
215
TRANSMITTER
RECEIVER
205
207
BATTERY
113
211
100

FIG. 2

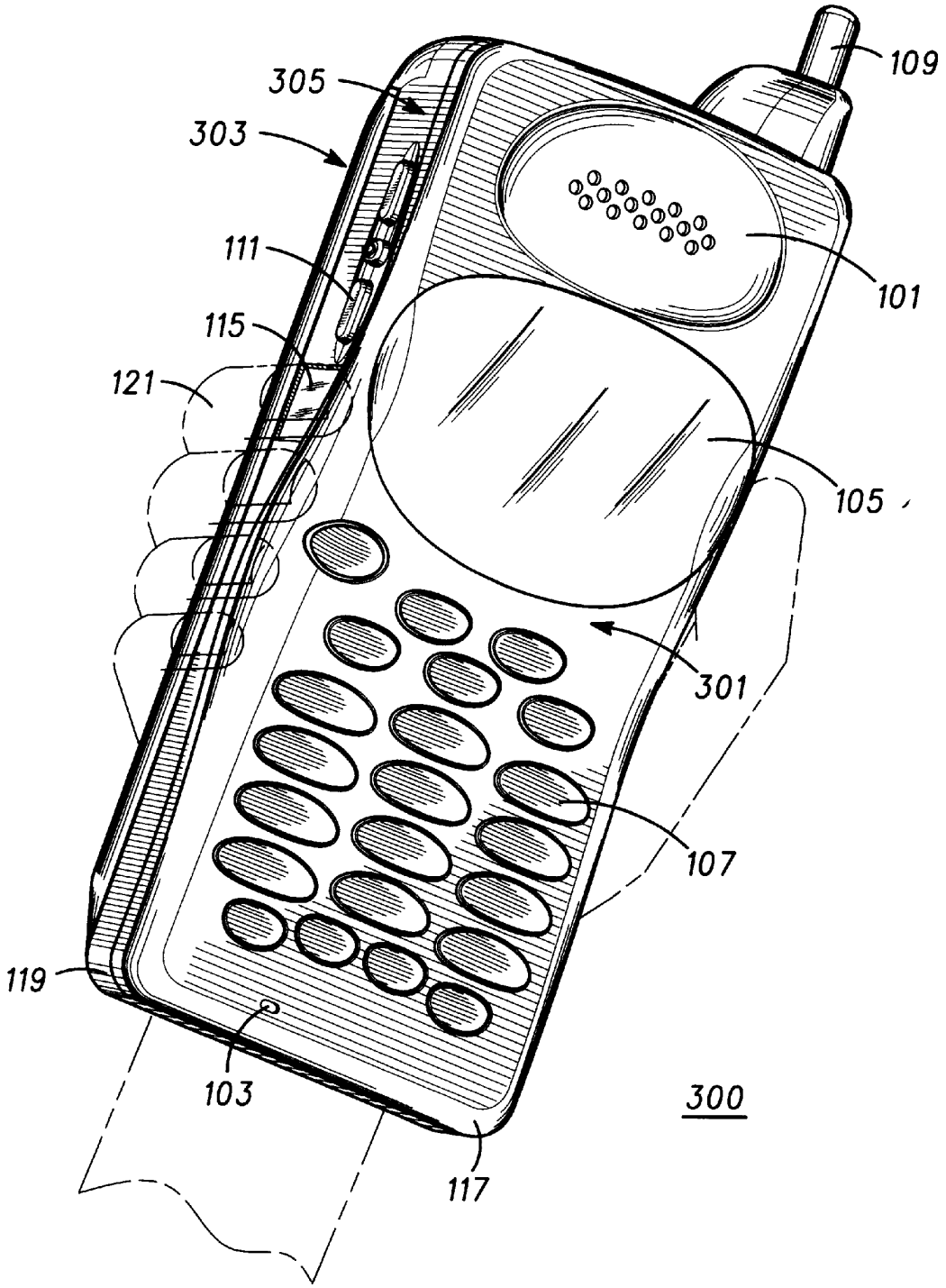

FIG. 3

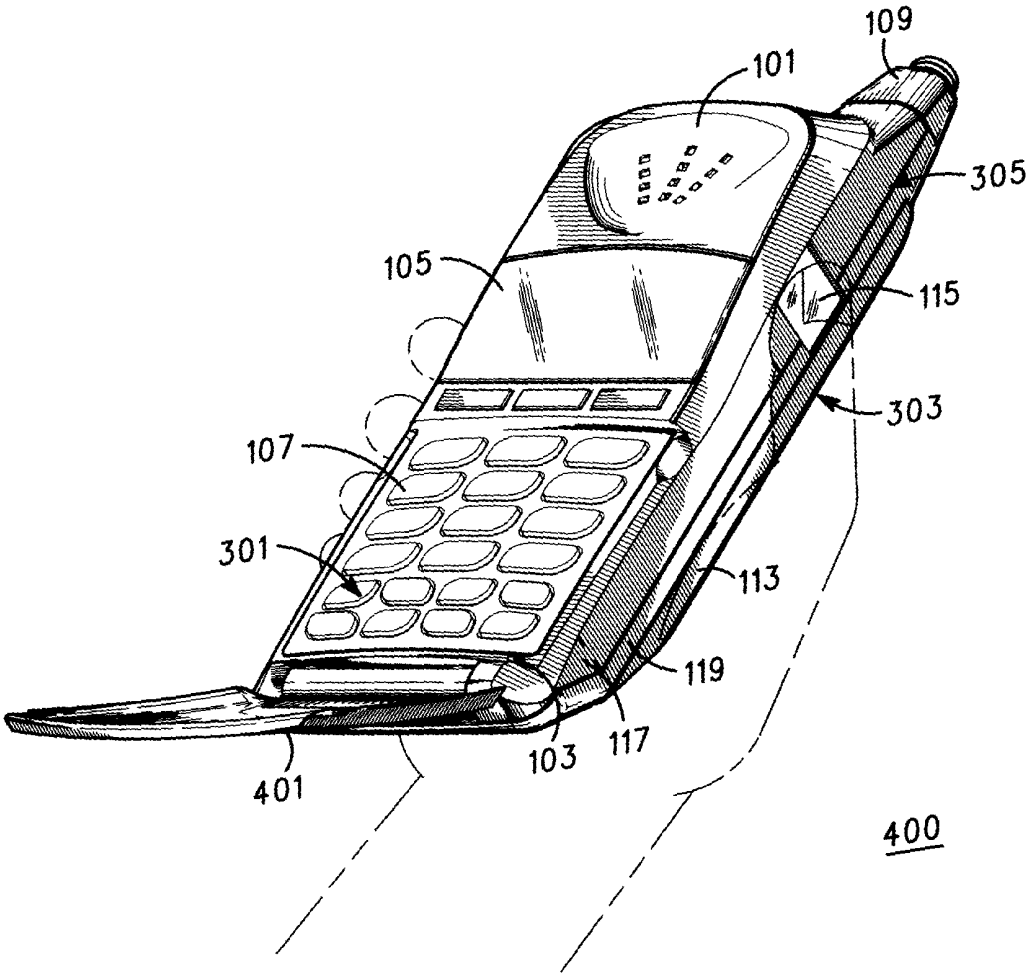

FIG. 4

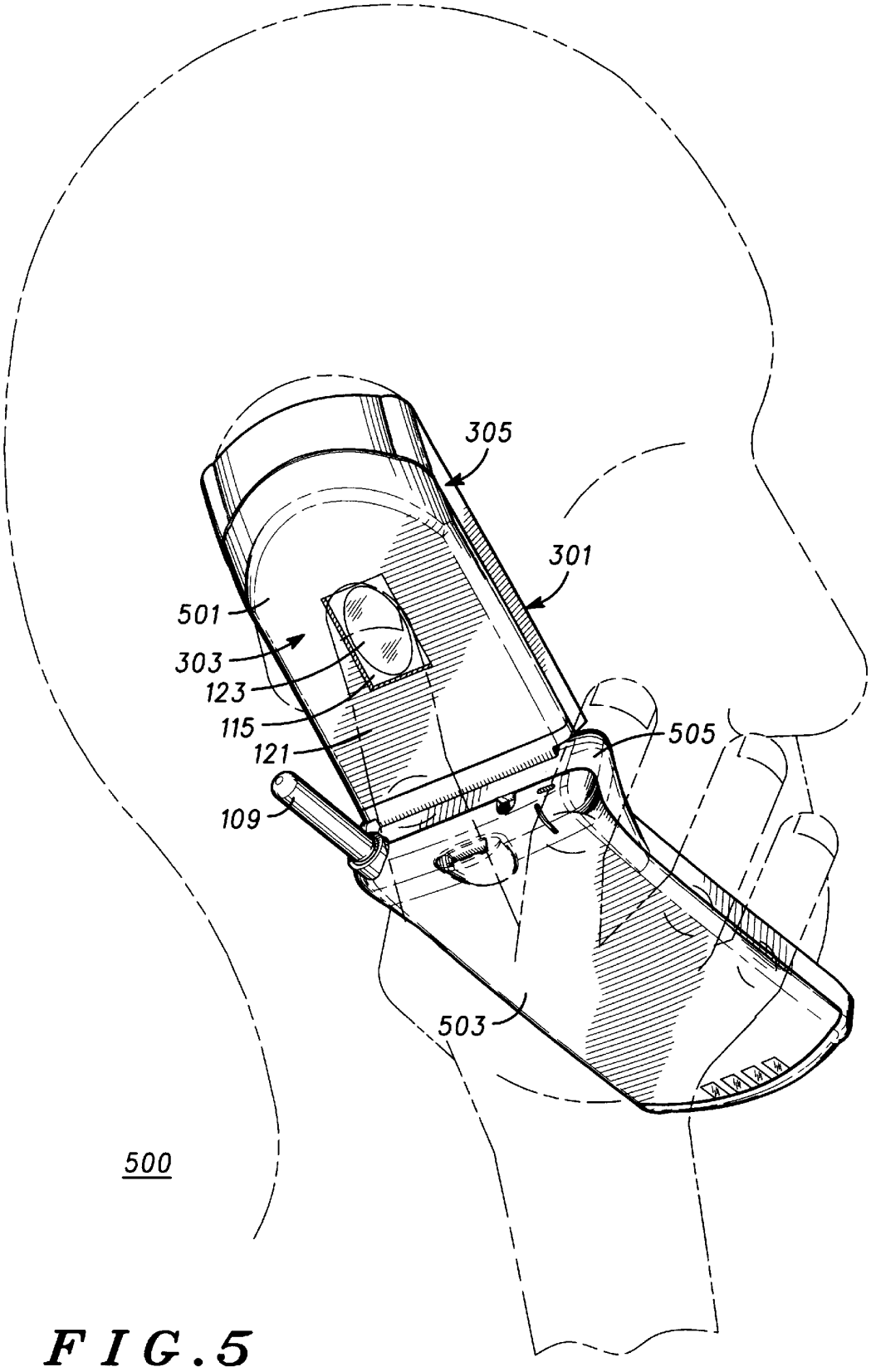

FIG. 5

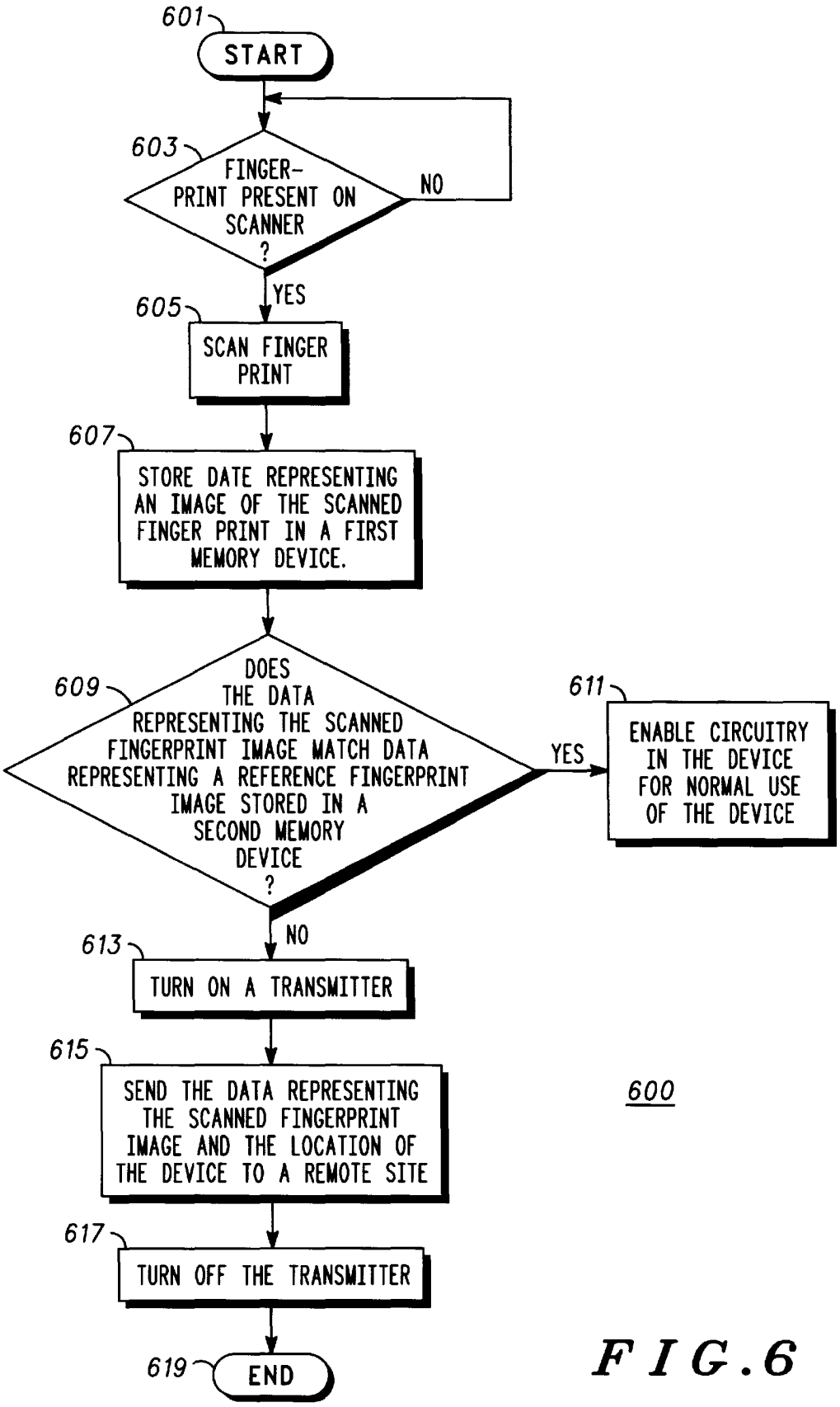
601
START
603
FINGER-PRINT PRESENT ON SCANNER ?
NO
YES
605
SCAN FINGER PRINT
607
STORE DATE REPRESENTING AN IMAGE OF THE SCANNED FINGER PRINT IN A FIRST MEMORY DEVICE.
609
DOES THE DATA REPRESENTING THE SCANNED FINGERPRINT IMAGE MATCH DATA REPRESENTING A REFERENCE FINGERPRINT IMAGE STORED IN A SECOND MEMORY DEVICE ?
YES
611
ENABLE CIRCUITRY IN THE DEVICE FOR NORMAL USE OF THE DEVICE
NO
613
TURN ON A TRANSMITTER
615
SEND THE DATA REPRESENTING THE SCANNED FINGERPRINT IMAGE AND THE LOCATION OF THE DEVICE TO A REMOTE SITE
600
617
TURN OFF THE TRANSMITTER
619
END

FIG.6

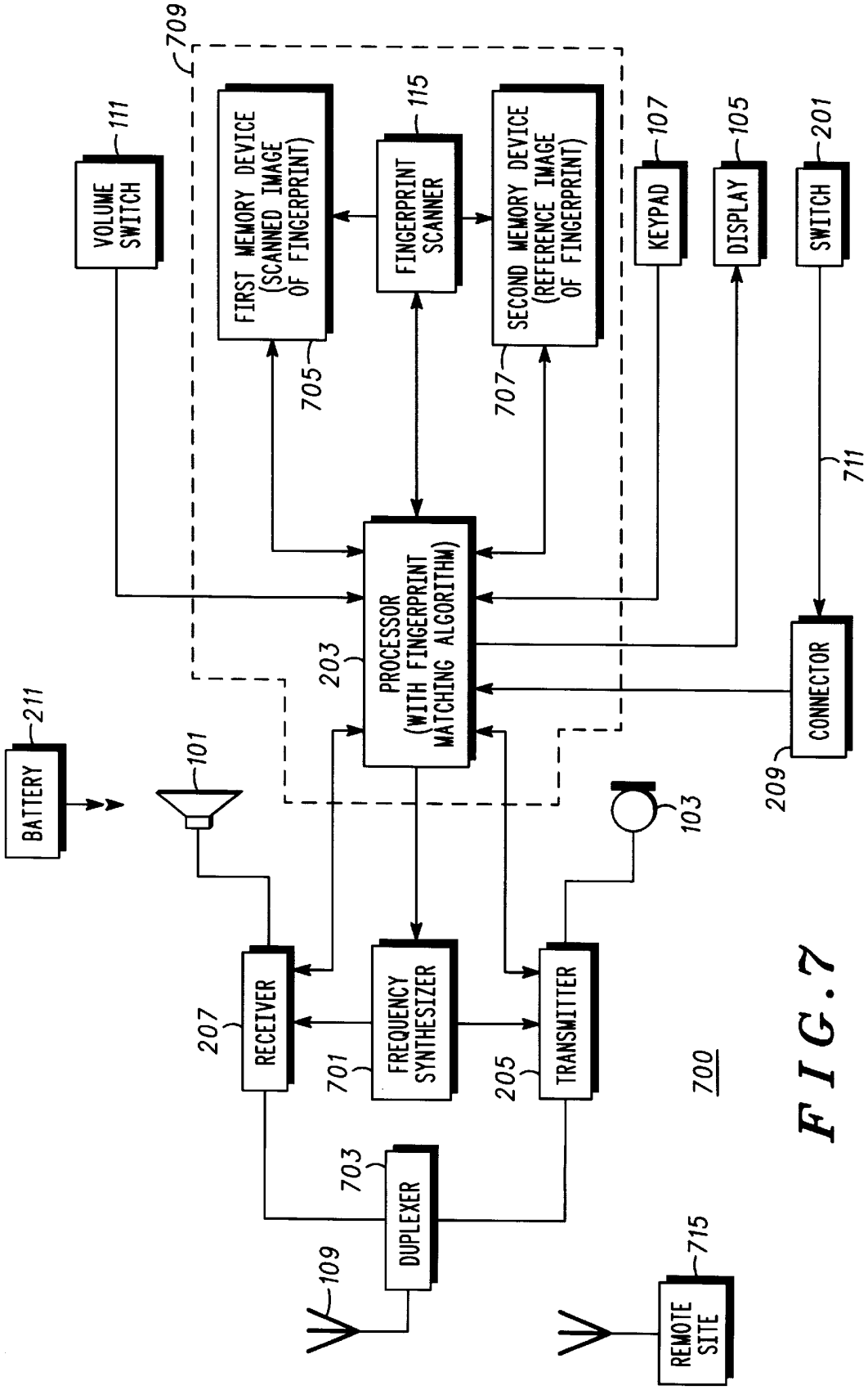
709
VOLUME SWITCH
111
FIRST MEMORY DEVICE (SCANNED IMAGE OF FINGERPRINT)
705
FINGERPRINT SCANNER
115
SECOND MEMORY DEVICE (REFERENCE IMAGE OF FINGERPRINT)
707
KEYPAD
107
DISPLAY
105
SWITCH
201
711
PROCESSOR (WITH FINGERPRINT MATCHING ALGORITHM)
203
CONNECTOR
209
BATTERY
211
101
103
RECEIVER
207
FREQUENCY SYNTHESIZER
701
TRANSMITTER
205
700
DUPLEXER
703
109
REMOTE SITE
715

FIG. 7

PORTABLE COMMUNICATION DEVICE HAVING A FINGERPRINT IDENTIFICATION SYSTEM

FIELD OF THE INVENTION

The present invention generally relates to portable communication devices and more particularly to a portable communication device having a fingerprint identification system.

BACKGROUND OF THE INVENTION

Portable communication devices, such as cellular telephones, are well known in the art and permit a user to communicate with a remote site. Typically, a user pays a fee to a communications service provider for access to a communication system in which the portable communication device operates. Cellular telephones, in particular, have become so popular that thieves have found it profitable to steal these devices for their own use or for sale to another user.

To discourage the thieves and to generally provide electronic security, most cellular telephones permit a user to enter a code to electronically lock and/or unlock a cellular telephone. Electronically locking a cellular telephone prohibits the cellular telephone from being used, such as to make or receive telephone calls and/or to enable or disable particular features of the cellular telephone. Electronically unlocking a cellular telephone permits the cellular telephone to be used, such as to make or receive telephone calls and/or to enable or disable particular features of the cellular telephone.

Several known techniques for generating an electronic lock code include: pressing a key on a keypad of the cellular telephone labeled "LOCK," pressing a key on a keypad of the cellular telephone labeled "FCN" (i.e. function) followed by pressing another key on the keypad of the cellular telephone labeled "5," for example, pressing a predetermined sequence of numerically labeled keys on a keypad of the cellular telephone, such as for example, by pressing the keys "5," "3," and "8," and selecting a lock feature from a menu presented in an electronic display.

One known technique for generating an electronic unlock code include: pressing a predetermined sequence of numerically labeled keys on a keypad of the cellular telephone, such as for example, by pressing the keys "5," "3," and "8." The predetermined sequence of numerically labeled keys may be the same or different for electronically locking and unlocking a cellular telephone.

Disadvantages using keys on a keypad of the cellular telephone to generate an electronic lock or an unlock code include: the electronic unlock and lock code may be used by someone other than the authorized user, if the electronic unlock and lock code is known to the unauthorized user; needing to press the predetermined number of keys; needing to remember the electronic unlock and lock code; needing to conceal the pressing of the predetermined number of keys at appropriate times; needing to generate the electronic unlock and lock code before and after, respectively, the cellular telephone is used, such as to make or receive telephone calls and/or to enable or disable particular features of the cellular telephone; and needing to press one key to power on the cellular phone followed by the predetermined number of keys to generate an electronic lock or an unlock code.

Outside of the art of portable communication devices, such as cellular telephones, fingerprint identification systems are known in the art as exemplified by U.S. Pat. Nos. 5,473,144, 5,493,621, 5,546,471, 5,426,708, 5,465,303, 5,467,403, and 5,493,621 and by a fingerprint verifier available from VLSI Vision Limited, 18805 Cox Avenue, Suite 260, Saratoga, Calif. 95070, USA. Fingerprint identification systems typically comprise a fingerprint scanner for scanning a fingerprint, a read only memory (ROM) lookup table for storing data representative of an authorized user's fingerprint, a digital signal processor (DSP) having an algorithm for comparing the scanned fingerprint with the data representing an authorized user's fingerprint. A fingerprint identification system advantageously provides unique personal user identification. However, fingerprint identification system have not been applied to portable communication devices.

Accordingly, there is a need for a portable communication device having a fingerprint identification system.

BRIEF DESCRIPTION OF THE DRAWINGS

FIG. **1** illustrates a perspective view of a portable communication device in accordance with a first embodiment the present invention.

FIG. **2** illustrates a cross-sectional view of a portion of a portable communication device of FIG. **1** in accordance with the first embodiment the present invention.

FIG. **3** illustrates a perspective view of a portable communication device in accordance with a first aspect of a second embodiment the present invention.

FIG. **4** illustrates a perspective view of a portable communication device in accordance with a second aspect of a second embodiment the present invention.

FIG. **5** illustrates a perspective view of a portable communication device in accordance with a third aspect of a second embodiment the present invention.

FIG. **6** illustrates a flowchart describing a method performed by a portable communication device in accordance with a third embodiment the present invention.

FIG. **7** illustrates an electrical block diagram a portable communication device in accordance with the first, the second and the third embodiments the present invention.

DETAILED DESCRIPTION OF THE PREFERRED EMBODIMENTS

In FIGS. **1–7**, like reference numbers represent the same element for feature. FIG. **1** illustrates a perspective view of a portable communication device **100** in accordance with a first embodiment the present invention. FIG. **2** illustrates a cross-sectional view of a portion of a portable communication device **100** of FIG. **1** in accordance with the first embodiment the present invention. The portable communication device **100** generally includes an earpiece transducer **101**, a microphone transducer **103**, a display **105**, a keypad **107**, an antenna **109**, a volume switch **111**, a battery housing **113**, a fingerprint identification system **709** (see FIG. **7**) including a scanner **115**, a front housing **117** and a rear housing **119**. The design of portable communication device **100** including all of the elements mentioned hereinabove, with the exception of the fingerprint identification system **709** including a scanner **115**, is well known in the art and is shown in U.S. Pat. No. Des. 384,952. The circuitry for the portable communication device **100** will be discussed herein below with reference to FIG. **7**.

The portable communication device **100** advantageously uses the fingerprint identification system **709** including the scanner **115** as a substitute for the combination key press

sequence of the prior art to generate a lock code and/or an unlock code for the portable communication device **100**. The fingerprint identification system advantageously provides unique personal identification characteristic of a person's fingerprint; whereas, the combination key press sequence of the prior art provides a unique key press sequence. Disadvantages of the combination key press sequence of the prior art to generate a lock code and/or an unlock code include: the electronic unlock and lock code may be used by someone other than the authorized user, if the electronic unlock and lock code is known to the unauthorized user; needing to press the predetermined number of keys; needing to remember the electronic unlock and lock code; needing to conceal the pressing of the predetermined number of keys at appropriate times; needing to generate the electronic unlock and lock code before and after, respectively, the cellular telephone is used, such as to make or receive telephone calls and/or to enable or disable particular features of the cellular telephone; and needing to press one key to power on the cellular phone followed by the predetermined number of keys to generate an electronic lock or an unlock code. However, the fingerprint identification system only recognizes unique personal fingerprints of a person to provide increased security against fraudulent use of the portable communication device **100**. Therefore, the person no longer need to remember the electronic unlock and lock code; to conceal the pressing of the predetermined number of keys at appropriate times; to generate the electronic unlock and lock code before and after, respectively, the cellular telephone is used, such as to make or receive telephone calls and/or to enable or disable particular features of the cellular telephone; and to press one key to power on the cellular phone followed by the predetermined number of keys to generate an electronic lock or an unlock code. The person simply places their finger on the scanner **115** to permit the scanner to scan their fingerprint.

The portable communication device **100** is preferably a cellular radiotelephone. However, the portable communication device may also be a selective call receiver, such as a pager, a personal notebook, a personal computer, a personal organizer, a data terminal, a two-way radio, an internet access device, an email access device, or the like.

The fingerprint identification system **709**, alone, is well known in the art as is taught by U.S. Pat. Nos. 5,473,144, 5,493,621, 5,546,471, 5,426,708, 5,465,303, 5,467,403, and 5,493,621 and by a fingerprint verifier available from VLSI Vision Limited, 18805 Cox Avenue, Suite 260, Saratoga, Calif. 95070, USA. The fingerprint identification system typically comprise a fingerprint scanner **115** for scanning a fingerprint, a read only memory (ROM) lookup table for storing data representative of an authorized user's fingerprint, a digital signal processor (DSP) having an algorithm for comparing the scanned fingerprint with the data representing an authorized user's fingerprint. These elements will be discussed in further detail with reference to FIG. **7** hereinbelow.

In the first embodiment, a portable communication device **100** comprises a switch **201** (see FIG. **2**), circuitry **700** (see FIG. **7**) and a fingerprint identification system **709**. The switch **201** generates an input signal **711** responsive to an actuation force. The circuitry **700** is adapted to receive the input signal **711**. The fingerprint identification system **709** includes the scanner **115** for scanning a fingerprint **123** of a finger **121** to generate an image of the fingerprint **123**. The scanner **115** is positioned relative to the switch **201** such that the finger **121** is permitted to generate the actuation force for the switch **201** when the fingerprint **123** is positioned on the scanner **115**. Therefore, the operation of the scanner **115** and the operation of the switch **201** are advantageously integrated or combined to provide more efficient use of each operation, thereby simplifying the use of the portable communication device **100**.

Referring to FIG. **2**, the switch **201** is disposed underneath the scanner **115** to permit the scanner **115** to directly actuate the switch **201** when the finger **121** pressed down on the scanner **115**. The switch **201** is mounted on a printed circuit board **213** as well as the keypad circuitry for the keypad **107**. Alternatively, the switch **201** may be positioned at a location offset from the scanner and not disposed beneath the scanner **115**. In this case, a mechanism would be needed to transfer the actuation force applied to the scanner **115** to the switch **201**. Further, the switch may be actuated by a sliding motion instead of a pressing motion. In this case, the finger **121** would slide the scanner to actuate the switch **201** while the finger **121** is on the scanner **115** instead of pressing the scanner **115**.

Preferably, the switch is a microswitch sensitive to the movement of the scanner **115**. The microswitch may be implemented as a pushbutton switch or a slide switch. Alternatively, the switch may be an elastomeric switch integrated with the keypad or a touchscreen pad. The elastomeric switch is preferably implemented as a pushbutton switch, as is well known in the art. The touchscreen pad is preferably a transparent pad located on top of a scanning surface of the scanner. Therefore, the touchscreen pad is disposed on top of the scanner as opposed to below or offset to the side of the scanner **115**, as discussed hereinabove.

FIG. **2** also shows posts **217** disposed between the scanner and a keypad printed circuit board **213** to prevent excessive force by a finger from damaging the switch **201**. The posts **217** are preferably connected to the scanner **115**. Alternatively, the posts may be connected to the keypad printed circuit board **213**, to the switch **201**, or be connected to or integrated with a separate piece, such as the front housing **117** or an elastomeric keypad of the keypad **107**.

Preferably, the scanner **115** scans the fingerprint **123** at the same time as the switch **201** is actuated by the actuation force exerted by the finger **121**. Alternatively, the scanning may be performed before or after the actuation of the switch. Preferably, the scanning and switch actuation to generate the input signal **711** happens in a relatively short period of time, such as one to two seconds, so that the user perceives the portable communication device **100** as simple and convenient to use.

Also shown in FIG. **2** are a cross-sectional view of the front housing **117**, the rear housing **119**, the battery housing **113**, the keypad printed circuit board **213**, a circuitry printed circuit board **215**, the circuitry **700** including a processor **203**, a transmitter **205**, a receiver **207** and a connector **209**, and a battery. The switch **201** is preferably mounted on the keypad printed circuit board **213**. The processor **203**, the transmitter **205** and the receiver **207** are preferably mounted on the circuitry printed circuit board **215**. The connector **209** connects the switch **201** on the keypad printed circuit board **213** to the circuitry **700** on the circuitry printed circuit board **215**. Alternatively, the switch **201**, the processor **203**, the transmitter **205** and the receiver **207** may be mounted on a single printed circuit board to eliminate one printed circuit board and the connector **209**.

Referring briefly to FIG. **7**, the fingerprint identification system **709** further comprises a first memory device **705**, a second memory device **707** and the processor **203** (also shown in FIG. **2**). The first memory device **705** stores data

representative of the image of the fingerprint **123**. The second memory device **707** stores data representative of at least one reference fingerprint. The processor **203** determines whether the data representative of the image of the fingerprint **123** matches the data representative of the at least one reference fingerprint. The processor **203** places the circuitry **700** in a first mode responsive to the input signal **711** when the data representative of the image of the fingerprint **123** matches the data representative of the at least one fingerprint.

The first memory device **705** is preferably a random access memory (RAM), as is well known in the art. The second memory device **707** is preferably a read only memory (ROM), as is well known in the art. The processor **203** is preferably a digital signal processor, as is well known in the art. The processor **203** has contained therein a matching algorithm embodied in software or hardware to determine whether the data representative of the image of the fingerprint **123** matches the data representative of the at least one reference fingerprint, as is well known in the art.

Preferably, the processor **203** places the circuitry **700** in a second mode responsive to the input signal **711** when the data representative of the image of the fingerprint **123** does not match the data representative of the at least one reference fingerprint.

Preferably, the switch **201** is a power switch and the input signal **711** is a power on/off signal. In this case, first mode and the second mode preferably comprise the circuitry **700** being turned on and the circuitry **700** being prevented from being turned on, respectively. Alternatively, the first mode and the second mode may comprise the circuitry **700** being turned on and the circuitry **700** temporarily being turned on to transmit the data representative of the image of the fingerprint to a remote site then the circuitry **700** being turned off, respectively. This alternative will be discussed in further detail with reference to FIG. **6**.

Alternatively, the switch **201** is a data switch and the input signal is a data signal. In this case, the first mode and the second mode further comprise an operational mode of the circuitry **700** being enabled and the operational mode of the circuitry **700** being disabled, respectively. Preferably, the operational mode of the circuitry **700** further comprises an incoming signal responding mode, such as answering an incoming telephone call by pressing a "SEND" key on a cellular telephone. Alternatively, in this case the operational mode of the circuitry **700** may comprises a customized feature setting mode, wherein the person is permitted to change operational features or options of the portable communication device **100**.

Note that any of the features of the first embodiment may be used individually or in combination to achieve various mechanical structures, electrical structures and methods of operation of the portable communication device **100**.

In summary of one aspect of the first embodiment, the portable communication device **100** comprises the power switch **201**, the circuitry **700** and the fingerprint identification system **709**. The power switch **201** generates a power on/off signal **711** responsive to an actuation force. The circuitry **700** is adapted to receive the power on/off signal **711**. The fingerprint identification system **709** comprises the scanner **115**, the first memory device **705**, the second memory device **707** and the processor **203**. The scanner **115** scans the fingerprint **123** of the finger **121** to generate the image of the fingerprint. The scanner **115** is positioned relative to the power switch **201** such that the finger **121** is permitted to generate the actuation force for the power switch **201** when the fingerprint **123** is positioned on the scanner **115**. The first memory device **705** stores data representative of the image of the fingerprint **123**. The second memory device **707** stores data representative of at least one reference fingerprint. The processor **203** determines whether the data representative of the image of the fingerprint **123** matches the data representative of the at least one fingerprint. The processor **203** places the circuitry **700** in a first mode responsive to the power on/off signal **711** when the data representative of the image of the fingerprint **123** matches the data representative of the at least one reference fingerprint. Further, the processor **203** places the circuitry **700** in a second mode responsive to the power on/off signal **711** when the data representative of the image of the fingerprint **123** does not match the data representative of the at least one fingerprint. Details of the first and second modes are discussed hereinabove.

In summary of a second aspect of the first embodiment, the portable communication device **100** comprises the data switch **201**, the circuitry **700** and the fingerprint identification system **709**. The data switch **201** generates an data signal **711** responsive to an actuation force. The circuitry **700** is adapted to receive the data signal **711**. The fingerprint identification system **709** comprises the scanner **115**, the first memory device **705**, the second memory device **707** and the processor **203**. The scanner **115** scans the fingerprint **123** of the finger **121** to generate an image of the fingerprint **123**. The scanner **115** is positioned relative to the data switch **201** such that the finger **121** is permitted to generate the actuation force for the data switch **201** when the fingerprint **123** is positioned on the scanner **115**. The first memory device **705** stores data representative of the image of the fingerprint **123**. The second memory device **707** stores data representative of at least one reference fingerprint. The processor **203** determines whether the data representative of the image of the fingerprint **123** matches the data representative of the at least one reference fingerprint. The processor **203** places the circuitry **700** in a first mode responsive to the data signal **711** when the data representative of the image of the fingerprint **123** matches the data representative of the at least one fingerprint. Further, the processor **203** places the circuitry **700** in a second mode responsive to the data signal **711** when the data representative of the image of the fingerprint **123** does not match the data representative of the at least one fingerprint. Details of the first and second modes are discussed hereinabove.

Turning now to FIGS. **3**, **4** and **5**, as second embodiment of the present invention is presented. FIG. **3** illustrates a perspective view of a portable communication device **300** in accordance with a first aspect of a second embodiment the present invention. FIG. **4** illustrates a perspective view of a portable communication device **400** in accordance with a second aspect of the second embodiment the present invention. FIG. **5** illustrates a perspective view of a portable communication device **500** in accordance with a third aspect of the second embodiment the present invention.

In accordance with the second embodiment, the portable communication device **300**, **400** or **500** comprises circuitry **700** (see FIG. **7**), a housing **117** and **119** and the fingerprint identification system **709** (see FIG. **7**). The housing **113**, **117** and **119** carries the circuitry **700**. The housing **117** and **119** is adapted to be held by a hand, having fingers and a thumb, of a person. The fingerprint identification system **709** includes the scanner **115** for scanning an image of the fingerprint **123** of the finger **121** or the thumb of the hand. The scanner **115** is ergonomically positioned on the housing **113**, **117** and **119** where the finger **121** or thumb naturally

rests on the housing **113**, **117** and **119** when the person holds the housing **113**, **117** and **119** while the portable communication device **300**, **400** or **500** is in use. The second embodiment advantageously permits a person to grab and hold the portable communication device **300**, **400** or **500** in a natural way and at the same time use the scanner **115**. The ergonomic position of the scanner **115** advantageously saves the person time in operating the portable communication device **300**, **400** or **500** by placing the scanner **115** in a location that the person can easily reach while holding the portable communication device **300**, **400** or **500**. The ergonomic position of the scanner **115** advantageously also permits the person to use the portable communication device **300**, **400** or **500** and the scanner **115** carried thereon with one hand, thereby permitting the person to use their other hand for other things.

Preferably, the housing **113**, **117** and **119** has a front surface **301** disposed opposite a rear surface **303** and a side surface **305** disposed between the front surface **301** and the rear surface **303**. The front surface **301** typically has a user interface including the earpiece transducer **101**, the microphone transducer **103**, the display **105** and the keypad **107**. The rear surface **303** of the housing **113**, **117** and **119** typically encloses the battery **211** (see FIG. **2**). Alternatively, the housing **113**, **117** and **119** may be constructed as a single housing. Further, the battery may cover only a portion of the rear surface of the battery housing **119**. In this case, the scanner **115** is located on the rear surface of the rear housing **119** and not on the battery housing **113** to avoid the need for connecting the scanner **115** to the circuitry **700** through the battery housing **113**.

According to a first aspect of the second embodiment, the scanner **115** is ergonomically positioned on the side surface **305** of the housing **113**, **117** and **119**, as shown in FIGS. **3** and **4**. In FIG. **3**, the scanner **115** is positioned on a left side of the housing **113**, **117** and **119** to permit the finger of a person's right hand to be positioned on the scanner **115** when the portable communication device **300** is held by the person's right hand during use. The design of the housing **113**, **117** and **119** shown in FIG. **3**, with the exception of the scanner **115** and the location thereof, is shown in U.S. Pat. No. Des. 384,952. In FIG. **4**, the scanner **115** is positioned on a right side of the housing **113**, **117** and **119** to permit the thumb of a person's right hand to be positioned on the scanner **115** when the portable communication device **300** is held by the person's right hand during use. Note in FIG. **4**, that a flap housing **401** is rotatably connected to the housing **117** and **119**, to permit the flap housing **401** to rotate between an open position exposing the keypad **107** (shown in FIG. **4**) and a closed position covering the keypad **107** (not shown). The design of the housing **113**, **117** and **119** shown in FIG. **4**, with the exception of the scanner **115** and the location thereof, is shown in U.S. Pat. No. Des. 379,982.

According to a second aspect of the second embodiment, the scanner **115** is ergonomically positioned on the rear surface **303** of the housing **113**, **117** and **119**, as shown in FIG. **5**. As mentioned hereinabove, the scanner **115** may be positioned on the rear surface of the rear housing **119** or the rear surface of the battery housing **113**. Note in FIG. **5** that the housing **113**, **117** and **119** is comprised of a top housing **501** rotatably coupled to a bottom housing **503** about a hinge **505** between an open position (shown in FIG. **5**) and a closed position (not shown). Alternatively, a slide mechanism may connect the top housing **501** to the bottom housing **503**.

Note that the ergonomic locations of the scanner as depicted on the portable communication devices **300**, **400** and **500** may be implemented on any of the housing constructions as shown in FIGS. **3**, **4** and **5**. For example, the scanner **115** may be located on the side surface **305** of the top housing **501** in FIG. **5** or the scanner **115** may be located on the right side surface of the housing **113**, **117**, and **119** in FIG. **4**.

In accordance with the second embodiment, the fingerprint identification system **709** further comprises the first memory device **705**, the second memory device **707** and the processor **203**. The first memory device **705** stores data representative of the image of the fingerprint **123**. The second memory device **707** stores data representative of at least one reference fingerprint. The processor **203** determines whether the data representative of the image of the fingerprint **123** matches the data representative of the at least one reference fingerprint. The processor **203** places the circuitry **700** in a first mode responsive to the input signal **711** when the data representative of the image of the fingerprint **123** matches the data representative of the at least one reference fingerprint. Preferably, the processor **203** permits the circuitry **700** to operate in the first mode as long as the finger **121** or thumb remains on the scanner **115**. Preferably, the scanner **115** scans the fingerprint to detect an authorized user only once, then periodically checks for the presence of the fingerprint without engaging the matching algorithm in the processor **203**.

Preferably, the circuitry **700** includes a transmitter **205** coupled to a microphone transducer **103** and a receiver **207** coupled to an earpiece transducer **101**, as shown in FIG. **7**. The housing **113**, **117** and **119** is adapted to be held by the hand of the person against a head of the person to permit the person to listen to acoustic signals generated by the earpiece transducer **101** and to generate acoustic signals for input into the microphone transducer **103** while the portable communication device **300**, **400** and **500** is in use. When the portable communication device **300**, **400** and **500** is held in this position, the scanner **115** is located in advantageous locations as described hereinabove.

FIG. **6** illustrates a flowchart describing a method performed by a portable communication device **100**, **200**, **300**, **400**, or **500** in accordance with a third embodiment the present invention. In summary of the third embodiment, the portable communication device **100**, **200**, **300**, **400**, or **500** comprises circuitry **700** including the transmitter **205** (see FIG. **7**) and the fingerprint identification system **709** (see FIG. **7**). The fingerprint identification system **709** comprises the scanner **115**, the first memory device **705**, the second memory device **707** and the processor **203**. The scanner **115** scans the fingerprint **123** of the finger **121** to generate an image of the fingerprint **123**. The first memory device **705** stores data representative of the image of the fingerprint **123**. The second memory device **707** stores data representative of at least one reference fingerprint. The processor **203** determines whether the data representative of the image of the fingerprint **123** matches the data representative of the at least one reference fingerprint. The processor **203** causes the transmitter **205** to transmit the data representative of the image of the fingerprint **123** to a remote site **715** (see FIG. **7**) when the data representative of the image of the fingerprint **123** does not match the data representative of the at least one fingerprint.

According to FIG. **6**, the flowchart starts at block **601**. The flow continues to block **603** wherein a determination is made whether or not a fingerprint is present on the scanner **115**. If not, the flow returns to block **603** to check again. If a fingerprint is present on the scanner **115**, the flow continues to block **605**, wherein the scanner **115** scans an image of the fingerprint **123**. The flow continues to block **607**, wherein

data representing the image of the scanned fingerprint **123** is stored in a first memory device **705**. The flow continues to block **609** wherein the processor determines whether or not the data representing the image of the scanned fingerprint **123** matches data representing an image of at least one reference fingerprint stored in a second memory device **707**. If the determination at block **609** is positive, then the flow continues to block **611**, wherein the circuitry **700** is enabled to permit normal operation of the portable communication device **100**, **300**, **400**, and **500**. If the determination at block **609** is negative, then the flow continues to block **613**, wherein the transmitter **205** is turned on by the processor **203**. The flow continues to block **615** wherein the data representing the image of the scanned fingerprint **123** and the location of the portable communication device **100**, **300**, **400**, and **500** in the communication system is transmitted to a remote site **715**, such as a cellular base station. The flow continues to block **617**, wherein the processor **203** turns the transmitter **205** off responsive to the transmission. The flow ends at block **619**.

The third embodiment advantageously provides increased security and fraud prevention and detection for the portable communication device **100**, **300**, **400**, and **500**. The data received by the remote site **715** would be kept in a memory which would be periodically overwritten by unauthorized fingerprint data sent from the portable communication device **100**, **300**, **400**, and **500**. Preferably, the memory at the remote site **715** would hold five to 10 unauthorized individual fingerprint data and locations of the device which are date stamped according to the date they were received. Then, if a person's device is stolen, the person reports the date that the device was stolen to the communication system provider. The provider would retrieve the unauthorized individual fingerprint data and locations of the device from the date the device was reported stolen. This data could then be used by a law enforcement agency to find the person who allegedly took the device without the authorized person's permission.

FIG. **7** illustrates an electrical block diagram a portable communication device in accordance with the first, the second and the third embodiments the present invention. FIG. **7** generally includes the earpiece transducer **101**, the microphone transducer **103**, the display, the keypad **107**, the antenna **109**, the volume switch **111**, the processor **203**, the transmitter **205**, the receiver **207**, a frequency synthesizer **701**, a duplex filter **703**, the switch **201**, the connector **209**, the battery **211** and the fingerprint identification system **709** including the first memory device **705**, the scanner **115**, the second memory device **707**, and the processor **203**. With the exception of the fingerprint identification system **709**, the earpiece transducer **101**, the microphone transducer **103**, the display, the keypad **107**, the antenna **109**, the volume switch **111**, the processor **203**, the transmitter **205**, the receiver **207**, the frequency synthesizer **701**, the duplex filter **703**, the switch **201**, the connector **209** and the battery **211** operate in a portable communication device, such as a cellular telephone, as is well known in the art. Further, only the fingerprint identification system **709** including the first memory device **705**, the scanner **115**, the second memory device **707**, and the processor **203** operate as is well known in the art of fingerprint identification systems, outside the portable communication device art. The three embodiments discussed hereinabove describe unique combinations between the portable communication device and the fingerprint identification system **709** to provide advantages not present in either the portable communication device or the fingerprint identification system **709** alone.

Note that any of the features of the first, the second and the third embodiments may be combined in whole or in part to produce various mechanical structures, electrical structures and/or method of operation.

What is claimed is:

1. A cellular telephone comprising:

circuitry including:

a transmitter coupled to a microphone transducer, and a receiver coupled to an earpiece transducer;

a housing for carrying the circuitry, the housing having a front surface disposed opposite a rear surface and a side surface disposed between the front surface and the rear surface, wherein the housing is adapted to be held by a hand, having fingers and a thumb, of a person against a head of the person to permit the person to listen to acoustic signals generated by the earpiece transducer in signal communication with the front surface and to generate acoustic signals for input into the microphone transducer in signal communication with the front surface while the cellular telephone is in use; and

a fingerprint identification system including a scanner for scanning an image of a fingerprint of a finger or the thumb of the hand, wherein the scanner is ergonomically positioned on the housing on any of the rear surface of the housing and the side surface of the housing where the finger or thumb naturally rests on the housing when the person holds the housing while the cellular telephone is in use.

2. A cellular telephone according to claim **1** wherein the fingerprint identification system further comprises:

a first memory device for storing data representative of the image of the fingerprint;

a second memory device for storing data representative of at least one fingerprint; and

a processor determining whether the data representative of the image of the fingerprint matches the data representative of the at least one fingerprint, wherein the processor places the circuitry in a first mode responsive to the input signal when the data representative of the image of the fingerprint matches the data representative of the at least one fingerprint.

3. A cellular telephone according to claim **2** wherein the processor permits the circuitry to operate in the first mode as long as the finger or thumb remains on the scanner.

4. A cellular telephone for sending and receiving information such as voice signals, the cellular telephone comprising:

a housing;

a transmitter carried by the housing, the transmitter for modulating and transmitting input information;

a receiver carried by the housing, the receiver for receiving and demodulating transmitted information;

a fingerprint identification security system carried by the housing, the fingerprint identification security system to detect authorized and unauthorized use of the cellular telephone, the fingerprint identification security system including:

a scanner for scanning a fingerprint of a finger to generate an image of the fingerprint,

a first memory coupled to the scanner for storing the image of the fingerprint,

a second memory coupled to the first memory for storing a reference fingerprint, and

control circuitry coupled to the first memory and the second memory, the control circuitry for determining whether the image of the fingerprint matches the reference fingerprint, wherein

when the image of the fingerprint matches the reference fingerprint, the control circuitry activates the cellular telephone for use, and

when the image of the fingerprint does not match the reference fingerprint, the control circuitry causes the cellular telephone to temporarily transmit the image of the fingerprint to a remote site and then deactivate the cellular telephone from use.

5. The cellular telephone as in claim **4** wherein a transmission of the image of the fingerprint to the remote site includes information pertaining to any of a geographic location of the cellular telephone and a date of the transmission of the image.

* * * * *