NUWC-NL Technical Report 10,003
7 April 1992

AD-A250 189

Sonar Beamforming - An Overview Of Its History and Status

Ronald R. Kneipfer
Submarine Sonar Department

DTIC
ELECTE
MAY 07 1992
S B D

Naval Undersea Warfare Center Detachment
New London, Connecticut

Approved for public release; distribution is unlimited.

92-12322

92 5 06 039

Luxottica et al. v. Solos
IPR2026-00512
Petitioners Ex. 1016

Preface

This report was prepared under NUWC Project A25045, *AN/SQQ-89 Program*, Principal Investigator C. W. Nawrocki (Code 33B). The sponsoring activity is the Program Executive Office for Surface Ship ASW Systems (PMO-411).

The technical reviewer for this report was Dr. N. L. Owsley (Code 2123).

REVIEWED AND APPROVED: 7 APRIL 1992

F. J. Kingsbury

F. J. Kingsbury
Head, Submarine Sonar Department

REPORT DOCUMENTATION PAGE

Form Approved
OMB No. 0704-0188

Public reporting burden for this collection of information is estimated to average 1 hour per response, including the time for reviewing instructions, searching existing data sources, gathering and maintaining the data needed, and completing and reviewing the collection of information. Send comments regarding this burden estimate or any other aspect of this collection of information, including suggestions for reducing this burden, to Washington Headquarters Services, Directorate for Information Operations and Reports, 1215 Jefferson Davis Highway, Suite 1204, Arlington, VA 22202-4302, and to the Office of Management and Budget, Paperwork Reduction Project (0704-0188), Washington, DC 20503.

1. AGENCY USE ONLY *(Leave blank)*

2. REPORT DATE
7 April 1992

3. REPORT TYPE AND DATES COVERED
Summary

4. TITLE AND SUBTITLE
Sonar Beamforming - An Overview of Its History and Status

5. FUNDING NUMBERS

6. AUTHOR(S)
Ronald R. Kneipfer

7. PERFORMING ORGANIZATION NAME(S) AND ADDRESS(ES)
Naval Undersea Warfare Center Detachment
New London, Connecticut 06320

8. PERFORMING ORGANIZATION REPORT NUMBER
TR 10,003

9. SPONSORING/MONITORING AGENCY NAME(S) AND ADDRESS(ES)
Program Executive Office
Surface Ship ASW Systems
Navy Department
Washington, DC 20362-5104

10. SPONSORING/MONITORING AGENCY REPORT NUMBER

11. SUPPLEMENTARY NOTES

12a. DISTRIBUTION/AVAILABILITY STATEMENT
Approved for public release; distribution is unlimited.

12b. DISTRIBUTION CODE

13. ABSTRACT *(Maximum 200 words)*

This report was prepared at the request of the Program Executive Office for Surface Ship ASW Systems to provide high level managers with a concise overview of the history and status of sonar beamforming. The publication should also serve as an introduction to the subject for new professionals. The history of sonar beamforming is traced from World War II to the present, ending with the topic of adaptive beamforming. A minimum of mathematics is used to facilitate rapid reading, with numerous references provided for the reader who wishes to delve further into the theory.

14. SUBJECT TERMS
Adaptive
Array Gain
Beamforming
Beam Pattern
Directivity Index
Multibeam Systems
Null Steering

15. NUMBER OF PAGES
32

16. PRICE CODE

17. SECURITY CLASSIFICATION OF REPORT
UNCLASSIFIED

18. SECURITY CLASSIFICATION OF THIS PAGE
UNCLASSIFIED

19. SECURITY CLASSIFICATION OF ABSTRACT
UNCLASSIFIED

20. LIMITATION OF ABSTRACT
SAR

NSN 7540-01-280-5500

Standard Form 298 (Rev. 2-89)
Prescribed by ANSI Std. Z39-18
298-102

TABLE OF CONTENTS

	Page
LIST OF ILLUSTRATIONS	iii
INTRODUCTION	1
DIRECTIONAL ANTENNAS	1
What Are They?	1
Why Do We Need Them?	1
Continuous Apertures Versus Arrays	2
Beam Patterns	3
Array Gain	4
Directivity Index	4
SINGLE BEAM SYSTEMS (1940's - 1960's)	5
Mechanical Steering of Continuous Apertures	5
Beamforming (Electrical Steering)	5
MULTIBEAM SYSTEMS (1960'S - PRESENT)	10
Digital Multibeam Steering (DIMUS)	10
Linear Multibeam Systems	11
ADAPTIVE BEAMFORMING (ABF)	12
Static Amplitude Shading	12
ABF as a Generalization of Shading	13
Optimality Criteria for ABF	13
Null-Steering Interpretation of ABF Performance	14
Element Space Versus Beam Space ABF	16
Adaptive Implementations of MVDR Beamformer	16
SUMMARY	18
REFERENCES	19
ADDITIONAL READING	A-1

QUALITY INSPECTED 4

Accession For
NTIS GRA&I ☑
DTIC TAB ☐
Unannounced ☐
Justification
By
Distribution/
Availability Codes
Dist | Avail and/or Special
A-1

LIST OF ILLUSTRATIONS

Figure		Page
1	Example of Continuous Aperture	2
2	Examples of Bow-Mounted Submarine Arrays	3
3	Sample Beam Pattern	4
4	Mechanically Steered JP Sonar	6
5	Geometry for Signal Field Arriving At Line Array	6
6	Output Waveforms From Hydrophones Due to Signal Field	7
7	Conventional Time Domain Beamformer Block Diagram	7
8	Conventional Frequency Domain Beamformer Block Diagram	8
9	Compensator Diagram	8
10	Manual Operation of a Compensator-Based System	9
11	Compensator-Based System With Continuous and Manual Scanning	10
12	Illustration of Multiple Beams	11
13	Schematic Diagram of the DIMUS Technique	11
14	Conventional Beamformer With Amplitude Shading	12
15	Frequency Domain ABF Block Diagram	13
16	Form of All Optimum Array Processors	14
17	Conventional Beam Pattern With Directional Interference	15
18	Adaptive Beam Pattern With Directional Interference	15
19	Element Space and Beam Space Processors	16

SONAR BEAMFORMING - AN OVERVIEW OF ITS HISTORY AND STATUS

INTRODUCTION

This report introduces the subject of sonar beamforming. It is assumed that the reader has little prior knowledge of the topic. A narrative approach has been taken that follows a historical thread from the early days of beamforming to the present. Numerous references are given for papers and texts should the reader desire to further explore the subject. Only unclassified material is presented under this cover; related classified topics will be treated in a confidential addendum.

DIRECTIONAL ANTENNAS

WHAT ARE THEY?

In general, an antenna is a transducer (or group of transducers) between an electrical waveform in a circuit and a field of energy. For example, an antenna might sense electromagnetic energy (radio waves) or mechanical energy (sound pressure fluctuations). Suppose that an antenna is placed at the center of a sphere of infinite radius and that we observe its output as a radiating source of energy is moved along the sphere's surface. If the output power of the antenna remains invariant to the position (arrival direction) of the source, we say that the antenna is *omnidirectional*. If, however, the output power varies with the arrival direction of the source, then we say that the antenna is *directional*. An ideal directional antenna would have zero output power (i.e., infinite attenuation) when the source was arriving from all directions but one; the direction to the source when the antenna output is maximum is called the *steer (or look) direction*. In practice, actual directional antennas maintain nearly constant response to signal fields arriving within a finite angular sector about the steer direction and provide only finite amounts of attenuation to those arriving outside that sector.

WHY DO WE NEED THEM?

There are two reasons why we use directional antennas. First, we may not always know a priori the direction of the source we are trying to receive. An omnidirectional antenna might serve to detect the presence of the source in such a situation, but would give no indication of where it is located. A directional antenna, however, allows determination of the source arrival angle because its output power is maximum when steered at the source.

The second reason for using a directional antenna is to attenuate signals that arrive from directions other than the steer direction. Such signals interfere with our ability to observe a waveform arriving from the steer direction and hence act as noise. By attenuating the contribution from interfering sources, a directional antenna improves the signal-to-noise ratio (SNR), which is the ratio of signal power to noise power.

CONTINUOUS APERTURES VERSUS ARRAYS

An antenna's aperture is the region in space within which it senses energy. Given an aperture, we can design a directional antenna in one of two ways. We can either populate the aperture with a continuous sensor or we can sample the aperture with a finite number of sensors. An example of a continuous aperture is the parabolic dish shown in figure 1; this particular dish is used to make radio astronomy observations. As with all continuous aperture

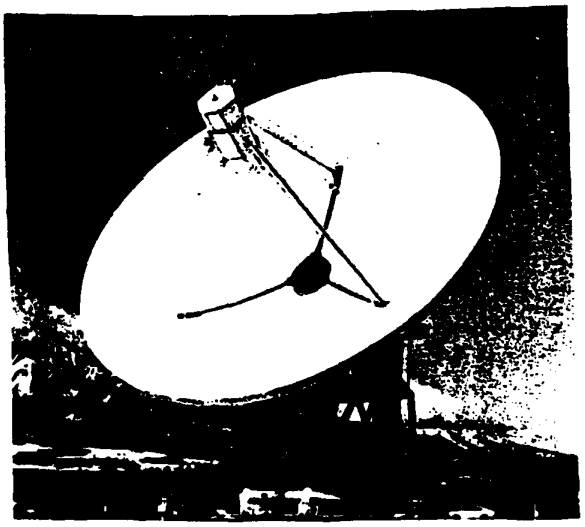

Figure 1. Example of Continuous Aperture

antennas, the steer direction of the dish is changed by mechanically changing the orientation of the device. Although it may pose no serious problem to mechanically steer an antenna for some applications, such as radio astronomy, other applications may preclude mechanical steering. For example, scanning the steer direction of a large, shipboard air surveillance antenna may be required at rates too fast to achieve mechanically. In this case, we employ the sampled aperture approach. The set of sensors used to sample the aperture is called an *array*, and as we shall see in a following section, we replace mechanical steering with an electrical steering process called *beamforming*. Figure 2 shows a full-scale test fixture for two arrays that will ultimately be

installed in the bow area of a submarine.

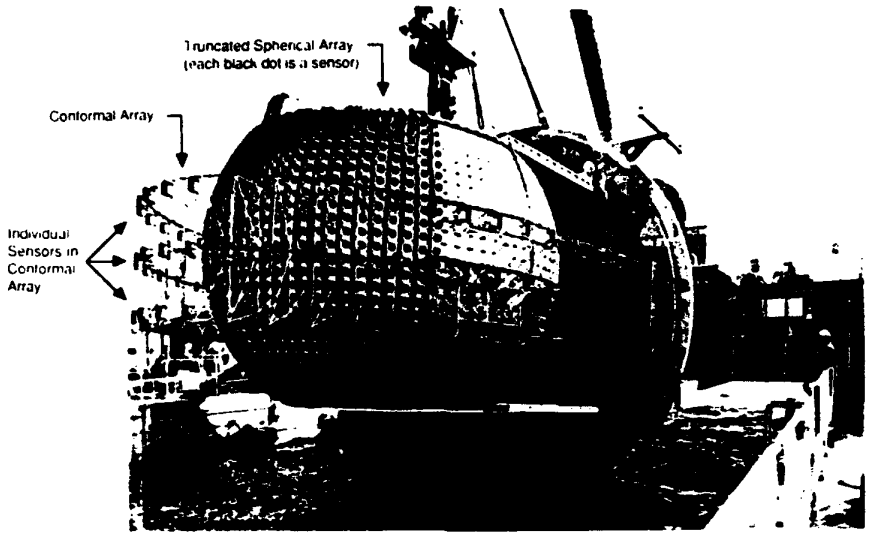

Figure 2. Examples of Bow-Mounted Submarine Arrays

BEAM PATTERNS

In order to graphically represent the directional properties of an antenna, we use a plot called a *beam pattern*. We obtain such a pattern by plotting output power as a function of the arrival angle of a plane wave source. Thus, a beam pattern is a plot in three dimensions. A sample pattern is shown in figure 3.

We see that the pattern has one lobe that is taller than all the others. This is called the *main lobe*, and its angular extent is called the *beamwidth*. The axis through the center of the main lobe is called the *maximum response axis (MRA)*. The angular sector outside of the main lobe, called the *sidelobe region*, contains all the lower lobes of the pattern. It is this region which provides attenuation of signals arriving from directions other than the MRA. It is standard practice to plot beam patterns in units of *decibels (dB)*. If θ and ϕ are polar angles and $\tilde{b}(\theta,\phi)$ is the output power when the source arrives from direction (θ,ϕ), then the decibel value of the beam pattern is given by

$$B(\theta, \phi) = 10 \log_{10}[b(\theta, \phi)] \tag{1}$$

where

$$b(\theta, \phi) = \tilde{b}(\theta, \phi) / \tilde{b}(\theta_s, \phi_s) \tag{2}$$

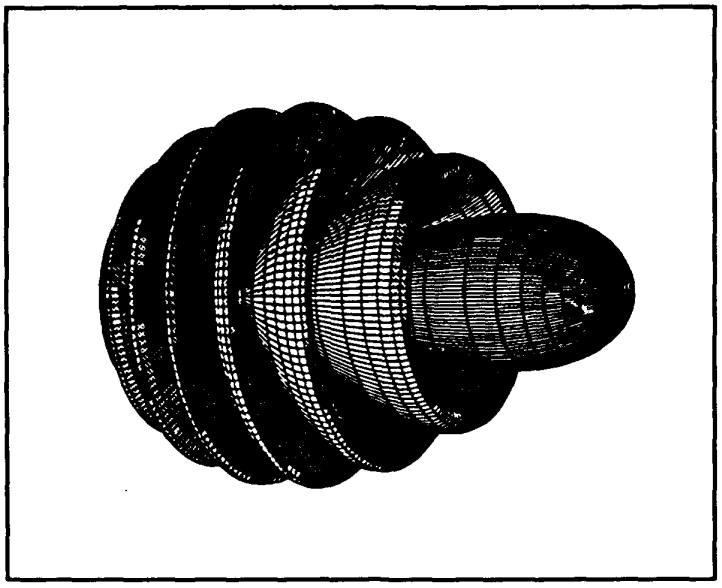

Figure 3. Sample Beam Pattern

is a scaled version of $\tilde{b}(\theta,\phi)$, which has been normalized to a maximum value of unity, and where (θ_S,ϕ_S) is the steer direction of the MRA. It is also standard practice to define beamwidth as the number of degrees between the 3 dB down points of the mainlobe.

ARRAY GAIN

One might wonder to what extent a directional antenna will improve SNR over an omnidirectional antenna. To characterize this improvement, we define a quantity called *array gain (AG)* as the ratio of the output SNR of a directional antenna to the output SNR of an omnidirectional antenna in the same signal-plus-noise field; i.e.,

$$AG = \frac{(SNR)_{directional}}{(SNR)_{omnidirectional}} \tag{3}$$

As with beam patterns, it is common to express array gain in decibels (dB) by computing10 times $\log_{10}(AG)$.

DIRECTIVITY INDEX

The array gain of a directional antenna will vary with the directional nature of the noise field , as well as with the coherence of the signal field across

the aperture. For better or worse (probably the latter), many designers and users of antennas prefer to assign a single number to an antenna that characterizes its directional behavior. The number is called *directivity index (DI)* and is defined as the array gain of the antenna for the special case in which (1) a perfectly coherent plane wave signal arrives on the MRA, and (2) the noise field is *isotropic* (i.e., the same amount of noise arrives from all directions). It can be shown[1] that when the response of a directional antenna to a plane wave signal arriving on it's MRA equals the response of an omnidirectional antenna to the same signal, the DI is given by

$$DI = \frac{\text{Volume of Unit Sphere}}{\text{Volume of } b(\theta,\phi)} \tag{4}$$

Recall that $b(\theta,\phi)$ is the beam pattern whose maximum value on the MRA has been normalized to unity. Thus, the volume of $b(\theta,\phi) \leq$ volume of unit sphere, and so, from equation (4), we have $DI \geq 1$. Also from equation (4), we see that as the volume contained within a beam pattern is decreased (e.g., by narrowing the main lobe and/or lowering the side lobes), DI is increased.

SINGLE BEAM SYSTEMS (1940's - 1960's)

MECHANICAL STEERING OF CONTINUOUS APERTURES

The only way to change the look direction of a continuous aperture antenna is to mechanically move its MRA. During World War II, U. S. submarines were equipped with the JP sonar that used a continuous aperture in the form of a rotatable horizontal line hydrophone. As shown in figure 4, the operator steered the line hydrophone via a servo system to bearings of interest. A major limitation of such mechanically steered antennas is size. It is not easy to fabricate large hydrophones, and even if it were, the size could never exceed the ship's width. To obtain larger apertures it became necessary to construct arrays of many small hydrophones and then to steer them electrically as described in the next section.

BEAMFORMING (ELECTRICAL STEERING)

The principle behind beamforming is really quite simple. Consider a plane wave signal field impinging upon an array of hydrophones. An examination of the output waveforms from the hydrophones would show that they are delayed versions of each other, with the amount of delay between any given pair equal to the time required for the signal to propagate between the

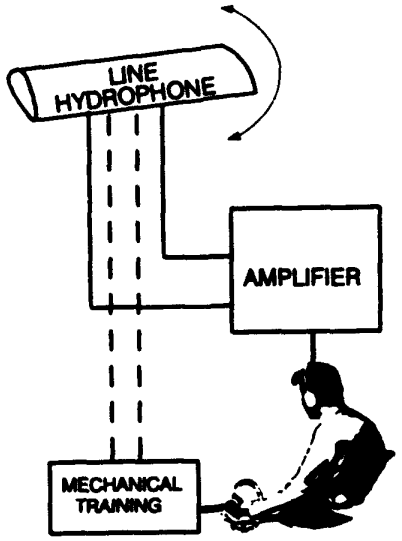

Figure 4. Mechanically Steered JP Sonar

pair. For example, consider a signal field arriving at a line array of M equispaced hydrophones as shown in figure 5. For the geometry shown, the

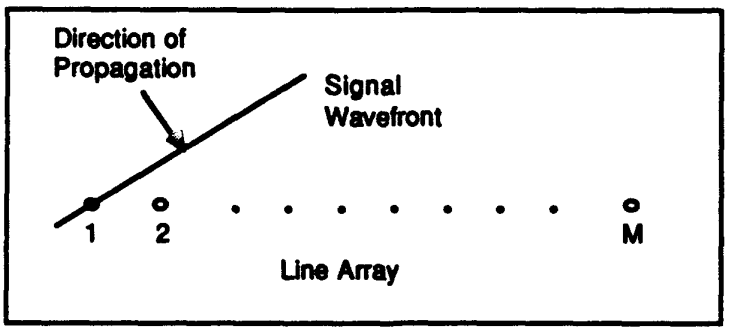

Figure 5. Geometry For Signal Field Arriving At Line Array

signal field first arrives at hydrophone 1, then at 2, 3, . . M. Thus, the output waveforms from the hydrophones would appear as illustrated in figure 6. In addition to the signal, each hydrophone output will also contain undesired noise. Because the noise tends to be independent from phone to phone, time-aligning the signal waveforms and then summing will cause the signals to add coherently and the noises incoherently, thus improving SNR. This process of time-alignment followed by summation is called conventional time domain

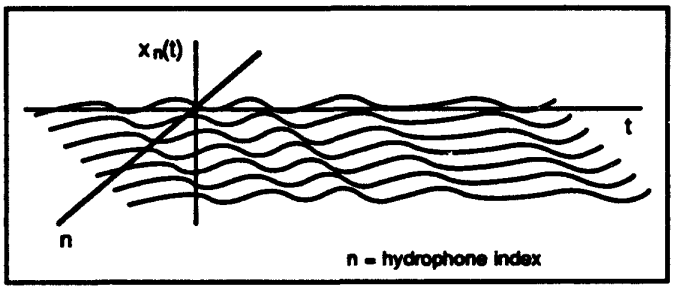

Figure 6. Output Waveforms From Hydrophones Due to Signal Field

beamforming and is shown in block diagram form in figure 7.

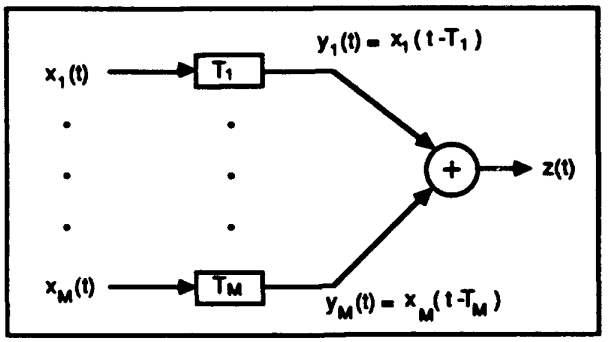

Figure 7. Conventional Time Domain Beamformer Block Diagram

In some applications, hydrophone outputs are passed through narrowband filters before beamforming. This filtering may be done because it is known a priori that the signal is narrowband, or perhaps because implementation is preferred in the frequency domain via a fast Fourier transform (FFT). Regardless of the motivation, once the hydrophone outputs have been narrowband filtered, it is possible to approximate the time delays needed for beamformation by phase shifts. If $y(f_o,t)$ is the complex envelope out of a narrowband filter having bandwidth B and center frequency f_o, then it can be shown that a good approximation to a delayed version of $y(f_o,t)$ is given by

$$y(f_o, t - T) \cong \exp(-j2\pi f_o T)\ y(f_o, t), \qquad BT < 0.1 \qquad (5)$$

A block diagram of a conventional frequency domain beamformer is shown in figure 8.

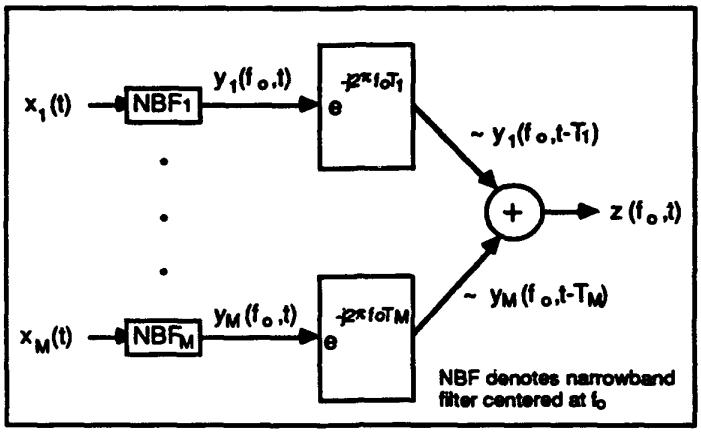

Figure 8. Conventional Frequency Domain Beamformer Block Diagram

From the above discussion, we see that changing the steer direction of a beamformer requires changing the time delays (or phase shifts) applied to the hydrophone outputs. It was the Germans who found a practical way to accomplish this during World War II. They developed the so-called *compensator system* [2] shown in figure 9. The system consists of two plates -

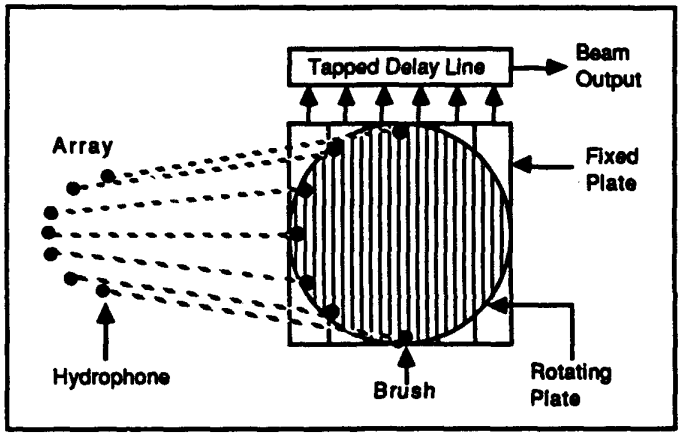

Figure 9. Compensator Diagram

one is fixed and the other rotates. The fixed plate is covered with straight, narrow, evenly spaced strips of metal, each of which is wired to the input of a tapped delay line. The movable plate has brushes that slide over the fixed

plate. The brushes are arranged in the same geometric shape as the array, and each brush is wired to its corresponding hydrophone. The operator is given a handwheel that controls the rotation of the movable plate. As the operator steers the handwheel, the brushes on the movable plate are connected to the proper taps on the delay line, and the superposition (sum) of the delayed outputs appears at the output of the delay line. Manual operation of a compensator-based system is illustrated in figure 10.

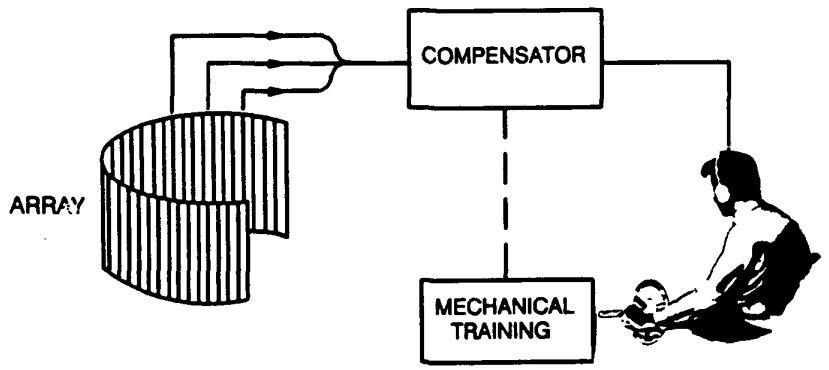

Figure 10. Manual Operation of a Compensator-Based System

The advent of beamforming by means of compensators gave sonar operators the capability to manually scan a single beam in any direction without requiring movement of the array itself. Next, as shown in figure 11, it was a simple step to build systems with two compensators, one for manual use by the operator and the other connected to a motor that repeatedly scanned its beam through all bearings. The detected output of the electrically scanned beam was used to intensity modulate a strip chart recorder in a bearing versus time format, thus providing the operator with a time history of traces from all detected contacts. The operator could then use the manually scanned beam to investigate contacts of interest for classification purposes.

Electrically scanned sonars were a major improvement over mechanically scanned, continuous aperture antennas. However, they still suffered from a serious drawback called *scanning loss*. A scanned beam spends only a small fraction of its time pointed at a given target. In fact, if the beamwidth is α degrees, then the beam is trained on a contact only $\alpha/360$ percent of the time! To eliminate scanning loss, the sonar community turned its attention to the development of multibeam systems, which is the subject of the next section.

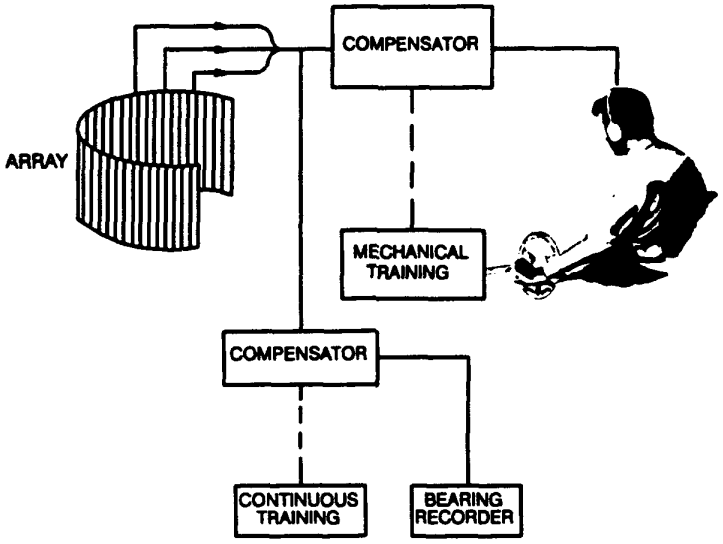

Figure 11. Compensator-Based System With Continuous and Manual Scanning

MULTIBEAM SYSTEMS (1960's - PRESENT)

DIGITAL MULTIBEAM STEERING (DIMUS)

To eliminate scanning loss, beamformers were developed that simultaneously form multiple beams pointed to fixed directions in space. These beams collectively provide continuous coverage in time over any desired spatial sector. Figure 12 illustrates a case in which the multiple beams of an array are providing complete coverage in azimuth, and limited coverage in vertical angle (to reduce clutter in the figure, a complete set of vertical beams is shown at only one azimuth). This approach ensures that one beam is always pointed at any given target in the sector being covered.

One of the first multibeam systems was built by Dr. Victor Anderson of the Marine Physical Laboratory, San Diego, California, in the late 1950's[3]. Digital circuits were also becoming available at that time, and Anderson took advantage of this new technology to implement the delay function required for beamforming. As shown in figure 13, he converted the outputs of hydrophones into bilevel waveforms by passing the signals through clipper amplifiers, and then he fed the bilevel waveforms into shift registers which served as tapped delay lines. Outputs from the appropriate shift register stages were fed into analog summing amplifiers to form the multiple beams. Eventually, the analog summing amplifiers were replaced by digital accumulators, yielding an all

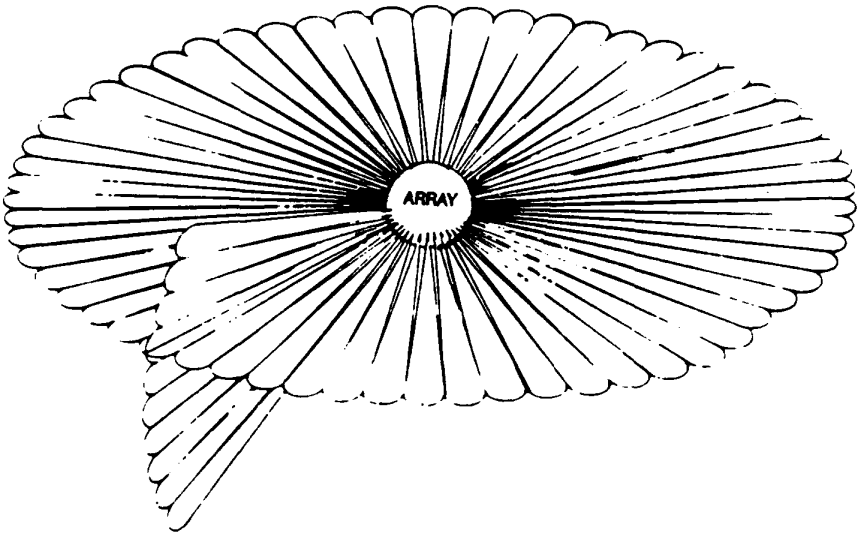

Figure 12. Illustration of Multiple Beams

digital beamformer with no moving parts and no scanning loss. This was a major advance in beamformer technology.

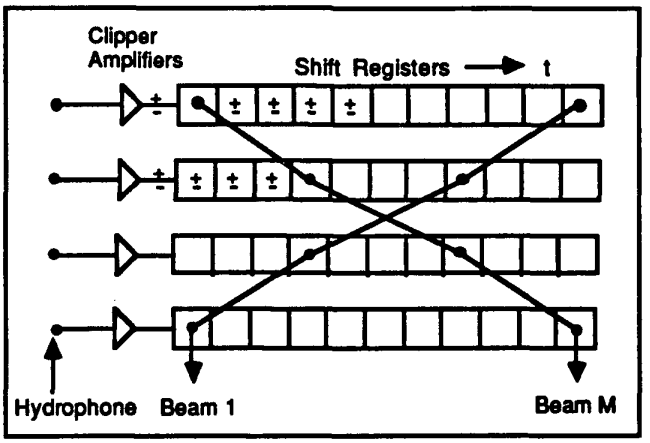

Figure 13. Schematic Diagram Of The DIMUS Technique

LINEAR MULTIBEAM SYSTEMS

While the DIMUS beamformer was a great step forward, it still had one drawback. Clipping the hydrophone outputs prior to beamforming introduced spectral distortion that was not acceptable for some applications. Fortunately, the rapid development of digital integrated circuits during the 1970's and 80's

made it possible to replace the clipper amplifiers with analog-to-digital converters, and the one bit shift registers with multibit memories. Thus, it became possible to maintain the linearity of hydrophone waveforms throughout the time domain, beamforming process. In a similar fashion, the advent of digital hardware to compute FFT's allowed formation of multiple, linear beams in the frequency domain.

ADAPTIVE BEAMFORMING (ABF)

STATIC AMPLITUDE SHADING

Before discussing adaptive beamforming, we shall consider a related topic called *shading* of an array. Early array designers looked at beam patterns and wondered if it might be possible to modify the beamforming process to yield lower side lobe levels. The answer is yes, if a widening of the pattern's main lobe is acceptable. The technique, as shown in figure 14, involves multiplying each hydrophone output by a properly chosen real gain prior to either conventional time or frequency domain beamformation.

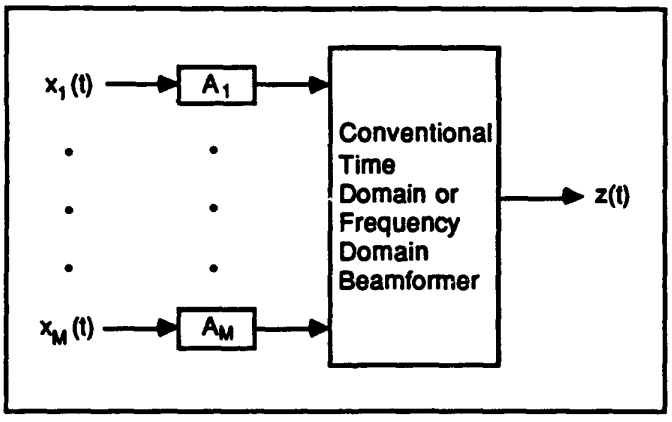

Figure 14. Conventional Beamformer With Amplitude Shading

The set of gains, $\{A_i\}$, are called amplitude shading weights. An array in which all shading weights are equal is said to be uniformly shaded and is equivalent to having no shading at all. Various criteria have been used to "properly choose" a set of nonuniform shading weights. For example, one might ask, "What set of weights will give the narrowest main lobe while keeping all side lobe peaks at a specified level?" A procedure for computing such a set of weights was derived by Dolph using Chebyshev polynomials, resulting in what is known as Dolph-Chebyshev shading. Then again, one might not desire all side lobe peaks to be at the same level, but rather to drop off at a prescribed

rate. This can be achieved using $\cos^{\alpha}(x)$ shading, where α controls the rate of fall-off. These are only two examples from the wide variety of shading schemes that have been developed over the years.

ABF AS A GENERALIZATION OF SHADING

Three points discussed in the preceding section are particularly noteworthy. First, criteria for determination of the shading weights were based solely upon the array's response to the signal field; no mention was made of the response to the noise field. Second, the shading weights were constrained to be real, even for frequency domain beamforming. And third, no mention was ever made of changing the shading weights once they were computed. In the early 1960's researchers took a more general approach to array processing. They included signal and noise properties in the derivation of shading weights, and because these properties could change with time, they decided that the shading weights should be adapted accordingly (hence the term *adaptive beamforming*). Although any discussion of ABF can be conducted in either the time or frequency domain, we shall use with the latter as has been done in most of the literature and in most actual implementations. Because the inputs to a frequency domain beamformer may be represented by complex numbers (e.g., FFT coefficients or complex envelopes), a further generalization will be made by allowing the shading weights to be complex also. Thus, our ABF block diagram will be as shown in figure 15, where the $\{X_i\}$ and $\{W_i\}$ are complex and the $\{W_i\}$ are adjustable.

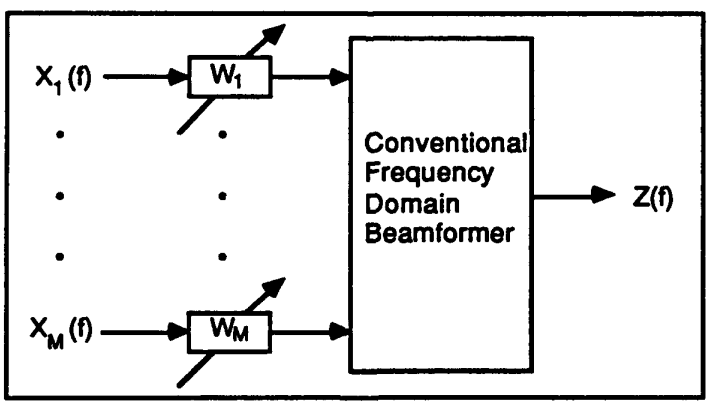

Figure 15. Frequency Domain ABF Block Diagram

OPTIMALITY CRITERIA FOR ABF

By the early 1960's, single channel, optimum filter theory for signal detection and estimation was fairly well established. Van Vleck and Middleton[4] had derived the "matched filter" that maximized SNR for detection, and Wiener[5]

had derived the filter for estimation that minimized mean square error (MMSE). Subsequent researchers derived filters based on other criteria of optimality, e.g., maximum likelihood ratio for detection and maximum likelihood function for estimation. It was only natural that these results be extended to the multichannel application of beamforming. Bryn[6] did so for the maximum likelihood ratio case, Mermoz[7] for maximum SNR, Burg[8] for MMSE, and Darlington[9] and Levin[10] for minimum variance distortionless response (MVDR). Under the MVDR criterion, a set of filter (shading) weights is found that minimizes power (variance) out of the beamformer while constraining the beamformer to pass the signal with fixed gain and no spectral distortion.

In 1966 Van Trees[11] published a significant paper showing that all the various optimum array processors mentioned above could be represented by the form shown in figure 16, i.e., an MVDR beamformer followed by a single filter whose transfer function depends upon the criterion of optimality.

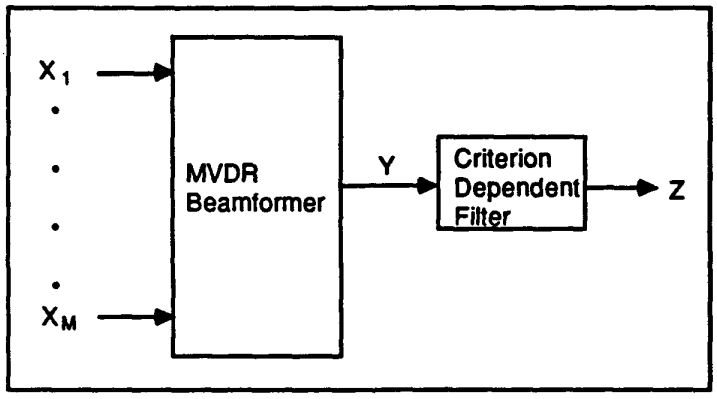

Figure 16. Form Of All Optimum Array Processors

Because the MVDR beamformer is common to all optimum array processing schemes, it received much attention from researchers during the 1970's and 80's. From this point on, whenever we refer to an adaptive beamformer, we shall assume its design is based upon the MVDR criterion unless otherwise stated.

NULL STEERING INTERPRETATION OF ABF PERFORMANCE

As noted earlier, computations of static shading weights for conventional beamformers are based upon criteria that are independent of the noise field in which the array is operating. Thus, it is possible to have a side lobe pointing toward a source of directional interference. This situation is shown in figure 17.

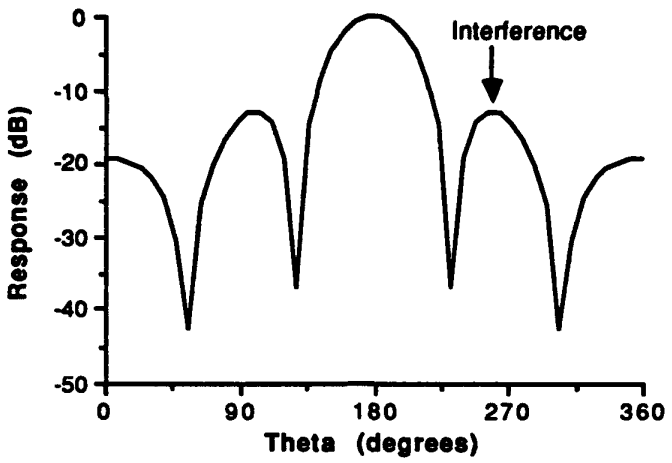

Figure 17. Conventional Beam Pattern With Directional Interference

An adaptive beamformer, on the other hand, will adjust its weights to minimize output power while maintaining unit gain for signals arriving from the steer direction. The way it minimizes output power is by attenuating its response to the directional interference. In terms of beam patterns, it adjusts its side lobe response such that a notch or null is positioned at the arrival angle of the interference as shown in figure 18.

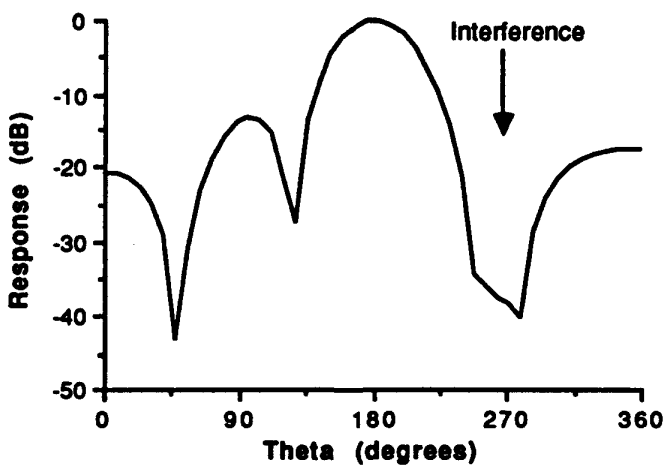

Figure 18. Adaptive Beam Pattern With Directional Interference

If the arrival angle of the interference changes, the adaptive beamformer automatically "steers" its null so that it is always pointed at the interference - hence, the interpretation of an adaptive beamformer as a null steering device.

ELEMENT SPACE VERSUS BEAM SPACE ABF

In some applications, it may be much easier to access the outputs of linear, conventional, preformed beams rather than the outputs of individual array elements. In such a case, the set of preformed beams corresponds to outputs from an array of *directional* elements (as opposed to the omnidirectional elements of the original array) and can be used as inputs to an MVDR beamformer as shown in figure 19.

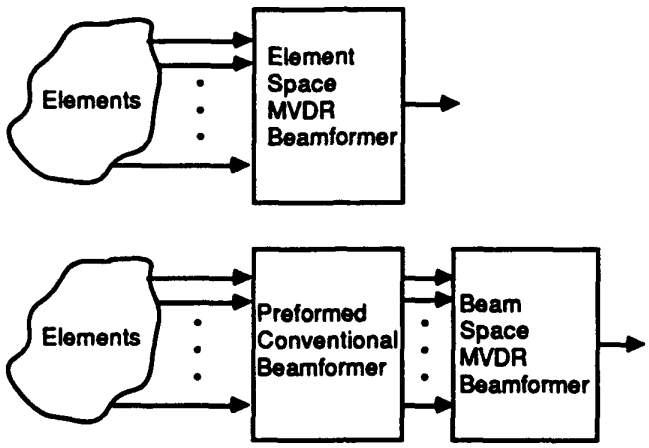

Figure 19. Element Space And Beam Space Processors

When element data are the input to an MVDR beamformer, we use the term *element space* processor; when preformed beam data are the input, we use the term *beam space* processor[12]. Gray[13] has shown that as long as the number of independent beams equals the number of array elements, the beam space processor indeed achieves the same array gain as the element space processor.

ADAPTIVE IMPLEMENTATIONS OF MVDR BEAMFORMER

Central to implementation of an MVDR beamformer is the requirement to solve the following matrix equation for the optimum weights:

$$\mathbf{w} = R_x^{-1}\mathbf{d} \tag{6}$$

where **w** is the optimum weight vector, R_x is the cross-spectral density matrix of the input data, and **d** is a steering vector to point the beam in some desired look direction. There are basically five ways in which this equation can be implemented. They will be described in the order of their historical evolution.

Method 1: Estimate R_x and Invert

This could be called the brute force approach. The input data are used either recursively or in a sequential batch fashion to estimate matrix R_x. Each time an updated estimate of R_x is generated, it is directly inverted to solve for **w**. Because the number of arithmetic operations required to invert an M x M matrix is $O(M^3)$, where O(•) denotes "of order," the amount of computation required can be substantial for large M. Furthermore, numerical instability can occur when inverting large matrices with finite precision arithmetic. Such drawbacks are the reason this method has never received serious consideration for real-time implementation.

Method 2: Gradient Descent

Widrow[14] applied the method of gradient descent to iteratively solve for **w**. His result, known as the least mean squares (LMS) algorithm, never requires the estimation of R_x and hence never requires its inversion. The resulting computational requirement is O(M), which makes it extremely attractive for real-time implementation. It is particularly well suited for running on a parallel processor of either the systolic array type or the single instruction, multiple data (SIMD) type. Its main drawback is a much slower convergence time (the number of iterations required to get sufficiently "close" to the optimum solution) than that of methods 3-5.

Method 3: Recursively Estimate R_x^{-1}

In the early 1970's researchers focused on ways to improve speed of convergence. In their approach,[15] based upon earlier recursive least squares work done by Plackett[16], new data are used to recursively estimate R_x^{-1} rather than R_x. This technique saves inverting R_x, and the method indeed converges faster than with the LMS algorithm. However, the price paid is that its computational complexity is $O(M^2)$, and, unfortunately, the method is not well suited for implementation on parallel processors.

Method 4: Recursively Estimate Cholesky Factor and Backsolve

Because R_x is a Hermitian, positive definite matrix, it can always be written in factored form as[17]

$$R_x = CC^H \tag{7}$$

where C is a lower triangular matrix known as the Cholesky factor. Owsley[18] has shown that C can be recursively estimated and used to backsolve equation (6) with computational complexity $O(M^2)$. This method converges much faster than the gradient descent method and is ideally suited for implementation on systolic array processors.

Method 5: Dominant Subspace Inversion

If the application will allow setting an upper limit on the number of strong interferences that the MVDR beamformer is to reject, then computational complexity can be reduced beyond that of methods 3 and 4. Suppose that $K \ll M$ represents the acceptable upper limit. Abraham and Owsley[19] have

shown that **w** can be approximated by an expression involving the K largest eigenvalues of R_x and their associated eigenvectors (which are said to span the signal subspace of R_x), and Yang and Kaveh[20] have shown that these quantities can be computed with $O(MK^2)$. This method is very well suited for implementation on either systolic or SIMD parallel processors.

Because method 1 has computational complexity $O(M^3)$ and method 3 is not well suited for running on parallel processors, only methods 2, 4, and 5 are serious contenders for implementation. The requirements of any specific application should then dictate which of the three methods to use.

SUMMARY

This report provides an introduction to the subject of beamforming for sonar applications. It explains why we need directional antennas, what the difference is between continuous apertures and arrays, and how we characterize performance by means of beam patterns, directivity index, and array gain. Single beam and multibeam systems are described as they have evolved from the 1940's to the present. Also, the important topic of adaptive beamforming is described, including discussions of various criteria of optimality, a null-steering interpretation of ABF performance, a comparison of beam space versus element space ABF, and five methods for ABF implementation.

This report will be followed with a classified addendum that will review past efforts to evaluate ABF performance on data from actual Fleet arrays. Also included will be processing requirements for real-time ABF implementation with a representative towed array.

REFERENCES

1. R. J. Urick, *Principles of Underwater Sound*, McGraw-Hill, Inc., New York, 1983.

2. J. W. Horton, *Fundamentals of Sonar*, United States Naval Institute, Annapolis, Maryland, 1957.

3. V. C. Anderson, "Digital Array Phasing," *Journal of the Acoustical Society of America*, vol. 32, no. 7, July 1960.

4. J. Van Vleck and D. Middleton, "A Theoretical Comparison of Visual, Aural, and Meter Reception of Pulsed Signals in the Presence of Noise," *Journal of Applied Physics*, **17** (11), November 1946.

5. N. Wiener, *Extrapolation, Interpolation, and Smoothing of Stationary Time Series*, John Wiley and Sons, Inc., New York, 1949.

6. F. Bryn, "Optimum Signal Processing of Three-Dimensional Arrays Operating on Gaussian Signals and Noise," *Journal of the Acoustical Society of America*, vol. 34, March 1962.

7. H. Mermoz, "Filtrage adapte' et utilization optimale d'une antenne," Signal Processing with Emphasis on Underwater Acoustics, *Proceedings NATO Advanced Study Institute*, 1964.

8. J. Burg, "Three-Dimensional Filtering With an Array of Seismometers," *Geophysics*, **29**, 5, 1964.

9. S. Darlington, "Linear Least-Squares Smoothing and Prediction, With Applications," *Bell Systems Technical Journal*, vol 37.

10. M. Levin, Section in Lincoln Laboratory Semiannual Technical summary Report on Seismic Discrimination, December 1964.

11. H. Van Trees, "Optimum Processing for Passive Sonar Arrays," *Proceedings of the IEEE Ocean Electronics Symposium*, Honolulu, Hawaii, August, 1966.

12. A. Vural, "A Comparative Study of Adaptive Array Processors," *1977 IEEE International Conference on Acoustics, Speech and Signal Processing*, Hartford, CT, 9-11 May 1977.

13. D. Gray, "Formulation of the Maximum Signal-To-Noise Ratio Array Processor in Beam Space," *Journal of the Acoustical Society of America*, vol. 72, no. 4, October 1982.

14. B. Widrow et al., "Adaptive Antenna Systems," *Proceedings of the IEEE*, vol. 55, 1967.

15. S. Haykin, *Adaptive Filter Theory*, Prentice-Hall, Inc., Englewood Cliffs, NJ, 1991.

16. R. Plackett, "Some Theorems in Least Squares", *Biometrika*, vol. 37, 1950.

17. G. Golub and C. Van Loan, *Matrix Computations*, Johns Hopkins University Press, Balitmore, MD, 1990.

18. N. Owsley, *An Introduction to Space-Time Signal Processing*, mini-course notes, 20 June, 1990.

19. D. Abraham and N. Owsley, "Beamforming With Dominant Mode Rejection," NUSC Reprint Report 8751, Naval Underwater Systems Center, New London, CT, July 11, 1990.

20. J. Yang and M. Kaveh, "Adaptive Eigensubspace Algorithms for Direction or Frequency Estimation and Tracking," *IEEE Transactions on Acoustics, Speech, and Signal Processing*, vol. 36, no. 2, February 1988.

ADDITIONAL READING

1. W. Burdic, *Underwater Acoustic System Analysis*, Prentice Hall, Englewood Cliffs, NJ, 1991.

2. J. Justice, N. Owsley, J. Yen, and A. Kak, *Array Signal Processing*, Prentice Hall, Englewood Cliffs, NJ, 1985.

3. R. Mucci, "A Comparison of Efficient Beamforming Algorithms," *IEEE Transactions on Acoustics, Speech, and Signal Processing*, volume ASSP-32, no. 3, June 1984.

4. "Special Issue on Adaptive Antennas, 1976," *IEEE Transactions on Antennas and Propagation*, volume AP-24, no. 5, Sept. 1976.

5. B. Steinberg, *Principles of Aperture and Array System Design*, John Wiley & Sons, New York, NY, 1976.

6. *Handbook of Array Design Technology*, prepared for Naval Electronic Systems Command, Code 320, by Applied Hydro-Acoustics Research, Inc., 30 June, 1976.

INITIAL DISTRIBUTION LIST

Addressee	No. of Copies
Program Executive Office, Surface Ship ASW Systems, (PMO-411 (D. Porter, D. Howard))	2
Program Executive Office, Submarine Combat Weapon Systems, (PMO-409 (W. Johnson, J. Smerchansky, D. Lechner))	3
CNO (OP-224 (CDR P. Bloomfield))	1
NAVSEA (06UR (Dr. Y. Yam))	1
Office of Naval Technology (ONT-20 (Dr. P. Selwyn), ONT-23 (Dr. A. J. Faulstich), ONT-231 (CDR G. Ramirez, T. Goldsberry, K. Ray), ONT-232 (T. Warfield))	6
DTIC	12