US 20090281543A1

(19) United States

(12) Patent Application Publication

(10) Pub. No.: US 2009/0281543 A1

(43) Pub. Date: Nov. 12, 2009

Orbay et al.

(54) **FORMABLE BONE PLATE, CLAMPING APPARATUS, OSTEOTOMY SYSTEM AND METHOD FOR RECONSTRUCTING A BONE**

(75) Inventors: **Jorge L. Orbay**, Miami, FL (US); **Thomas H. Norman**, Miami, FL (US); **William Garcia de Quevedo**, Miami, FL (US)

Correspondence Address:
LERNER GREENBERG STEMER LLP
P O BOX 2480
HOLLYWOOD, FL 33022-2480 (US)

(73) Assignee: **SKELETAL DYNAMICS LLC**, Miami, FL (US)

(21) Appl. No.: **12/463,037**

(22) Filed: **May 8, 2009**

Related U.S. Application Data

(60) Provisional application No. 61/051,749, filed on May 9, 2008.

Publication Classification

(51) **Int. Cl.**
A61B 17/56 (2006.01)
A61B 17/84 (2006.01)

(52) **U.S. Cl.** **606/70**; 606/324

(57) **ABSTRACT**

A system and method are provided that use a formable bone plate and a clamping apparatus for small bone reconstruction. The formable bone plate includes a plate body having a plurality of nodes separated by internodes. Each node includes a hole formed therein for receiving a screw, wire, tack, or other fixation device screwed or placed into a bone. A clamp engages an engagement section of the node to facilitate bending of at least one of the internodes to contour the plate to the bone in-situ or ex-situ and when at least partly screwed to or not screwed to the bone.

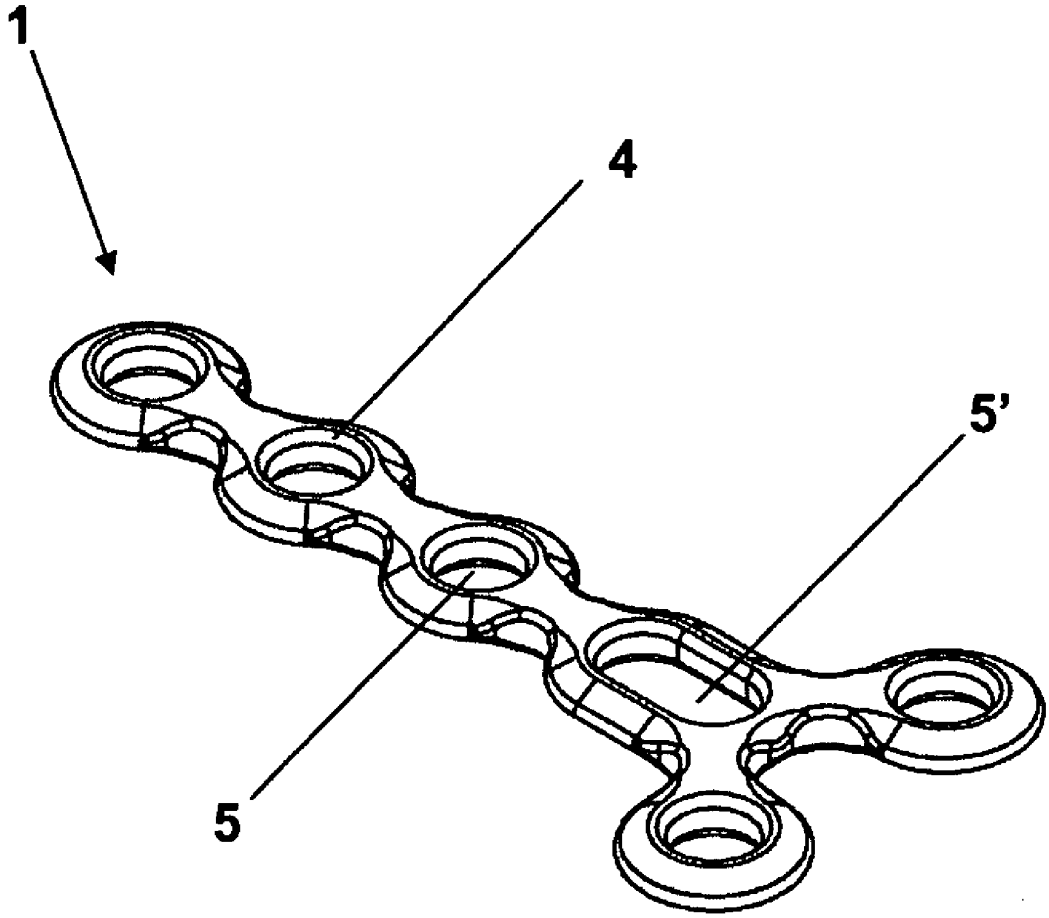

Treace Medical Concepts, Inc. v. Paragon 28, Inc.
IPR2027-00013
Treace Ex. 1008

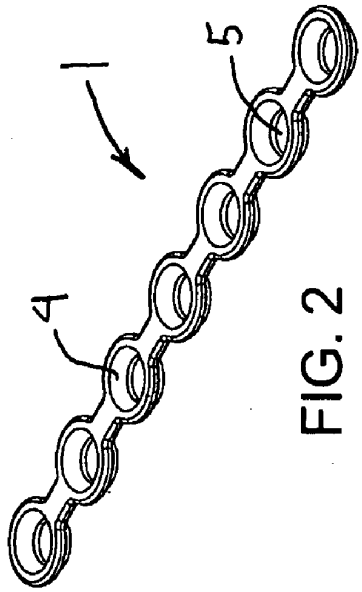

FIG. 2

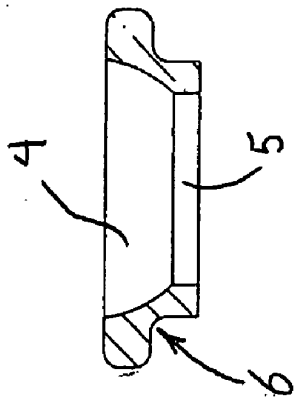

FIG. 4

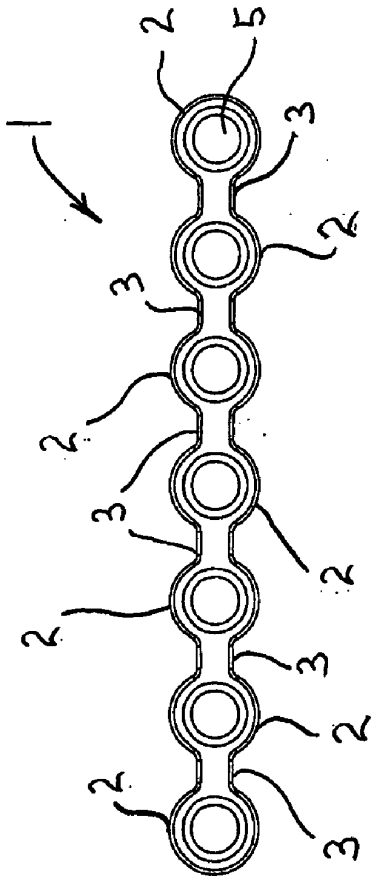

FIG. 1

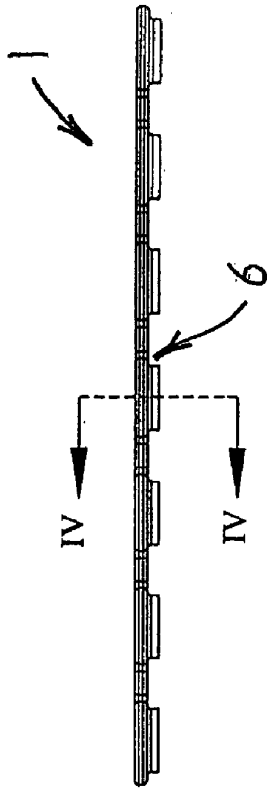

FIG. 3

FIG. 5

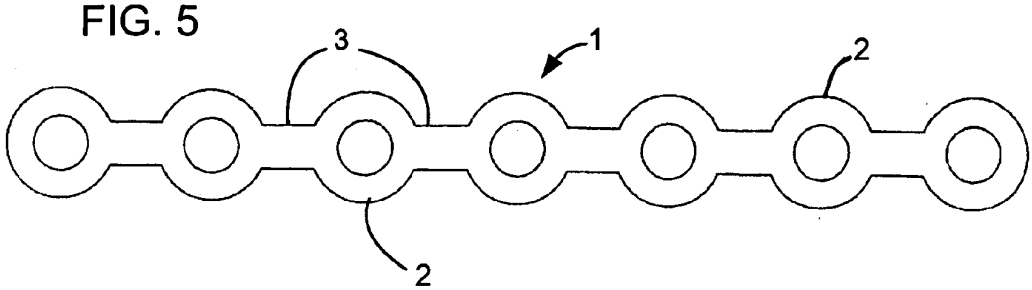

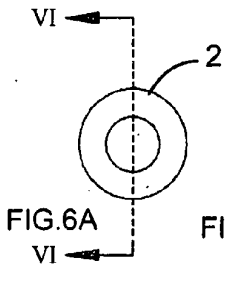

FIG.6A

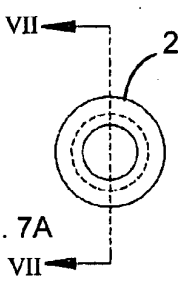

FIG. 7A

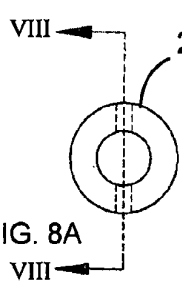

FIG. 8A

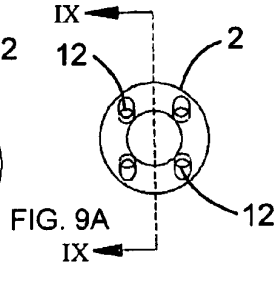

FIG. 9A

FIG. 6B

FIG. 7B

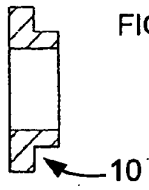

FIG. 8B

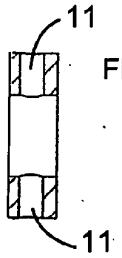

FIG. 9B

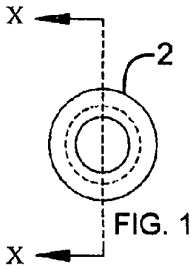

FIG. 10A

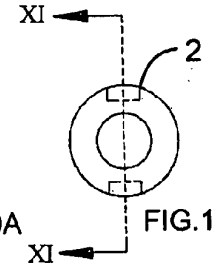

FIG.11A

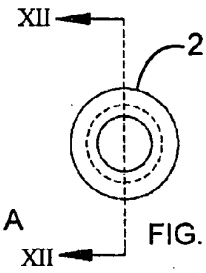

FIG. 12A

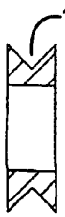

FIG. 10B

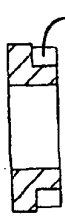

FIG. 11B

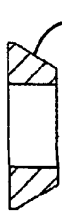

FIG. 12B

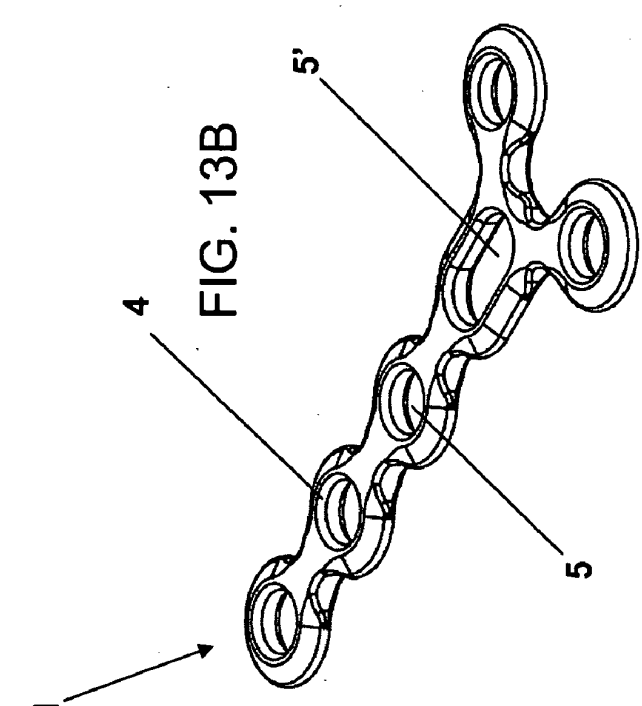

FIG. 13B

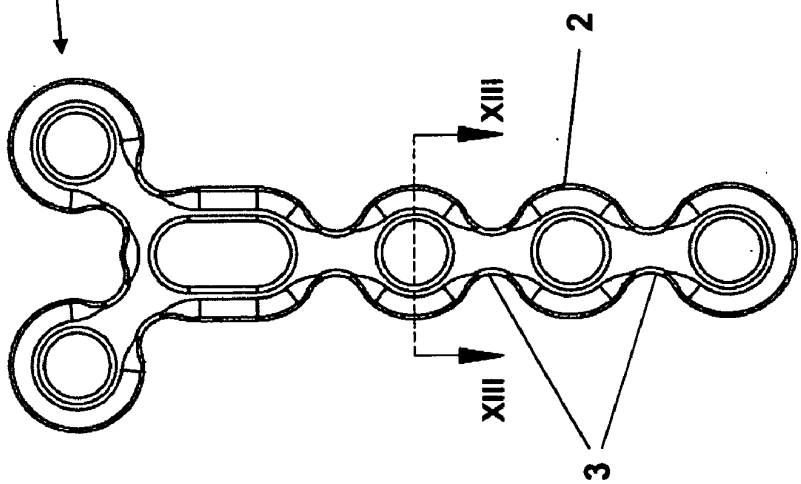

FIG. 13A

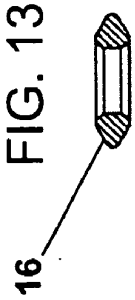

FIG. 13C

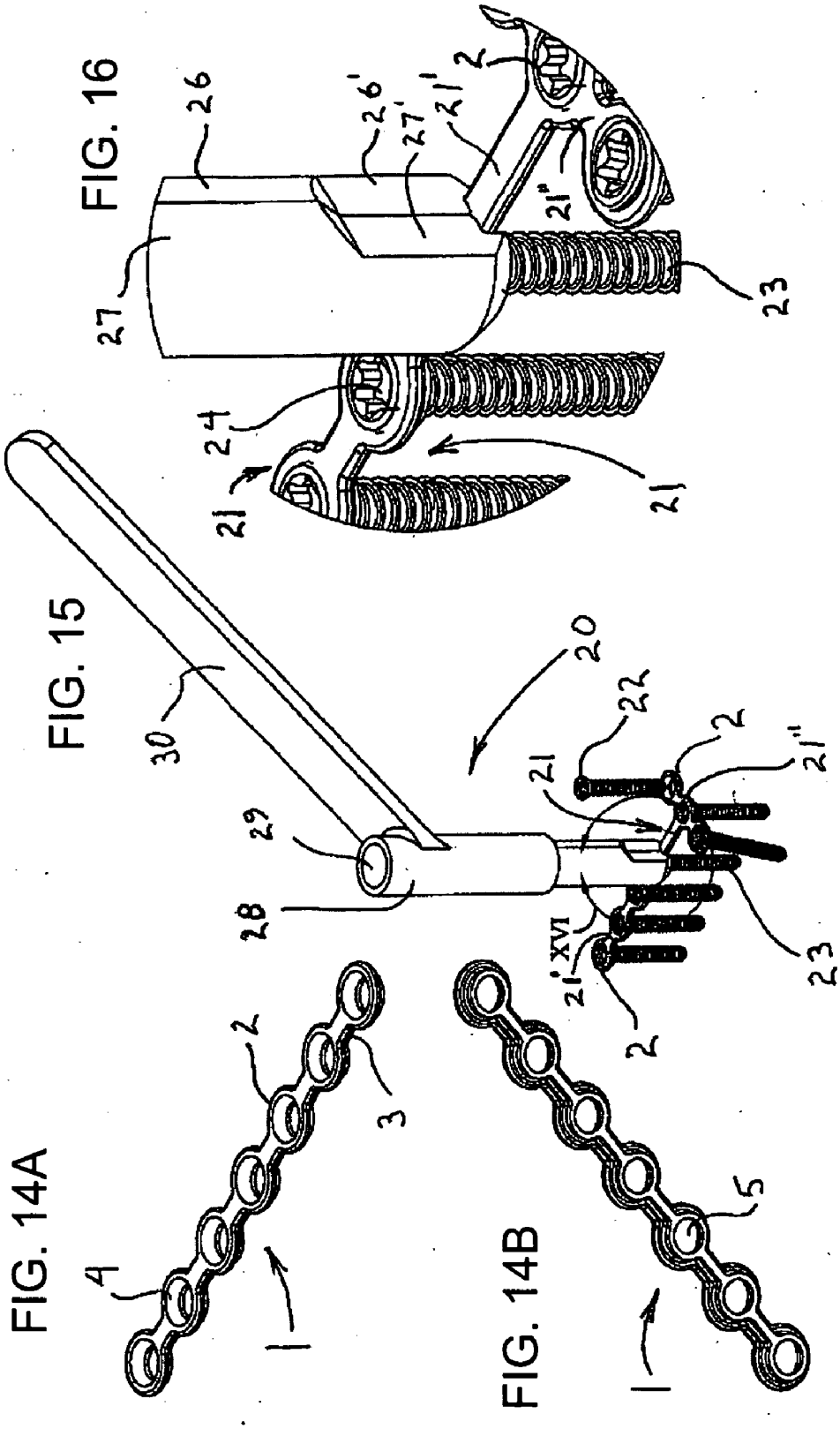
FIG. 14A
FIG. 14B
FIG. 15
FIG. 16
1
2
3
4
5
20
21
21'
21''
22
23
24
26
26'
27
27'
28
29
30
XVI

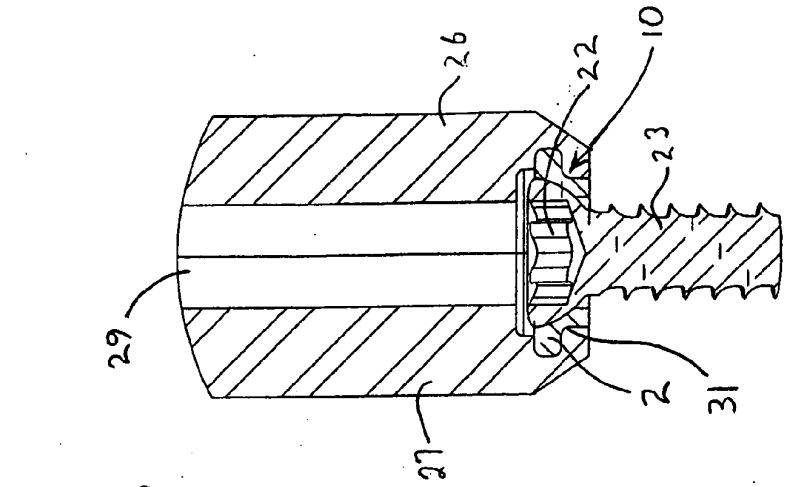

FIG. 20

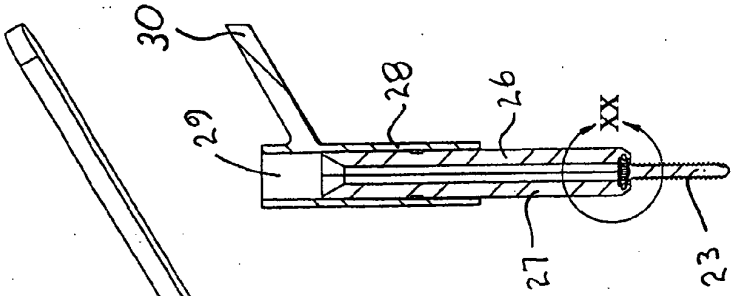

FIG. 19

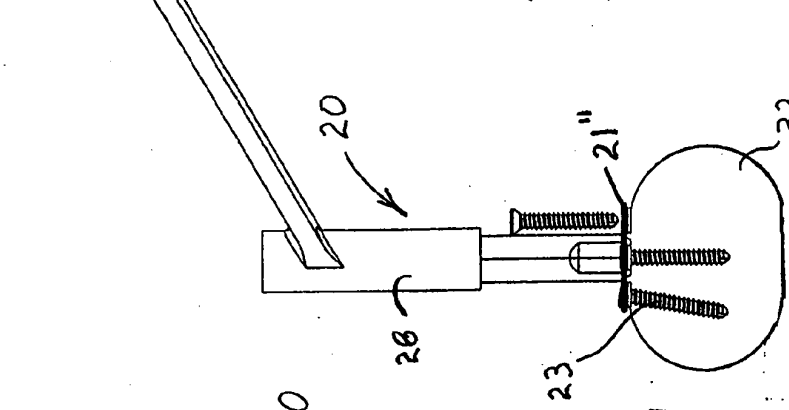

FIG. 18

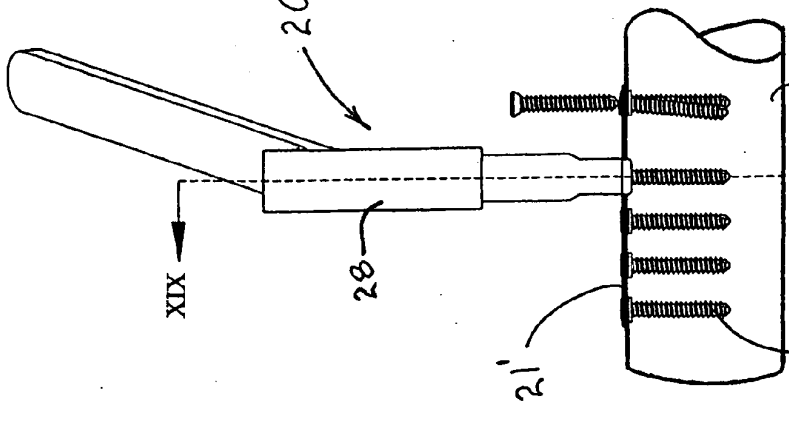

FIG. 17

FIG. 22

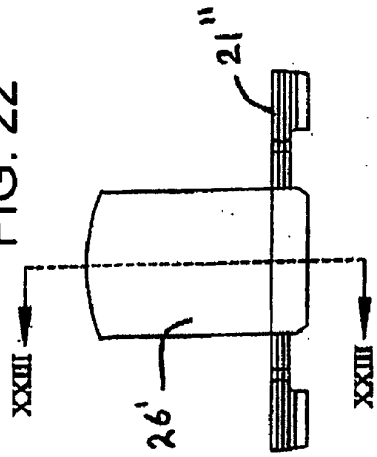

FIG. 23

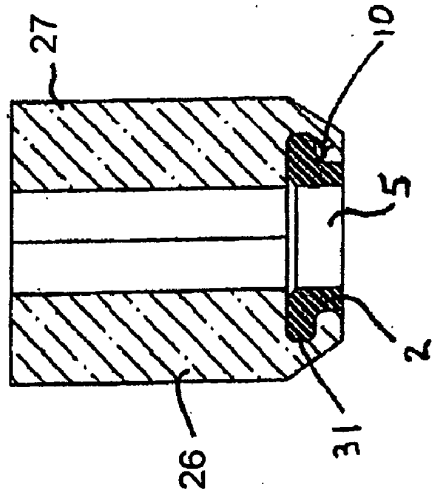

FIG. 21

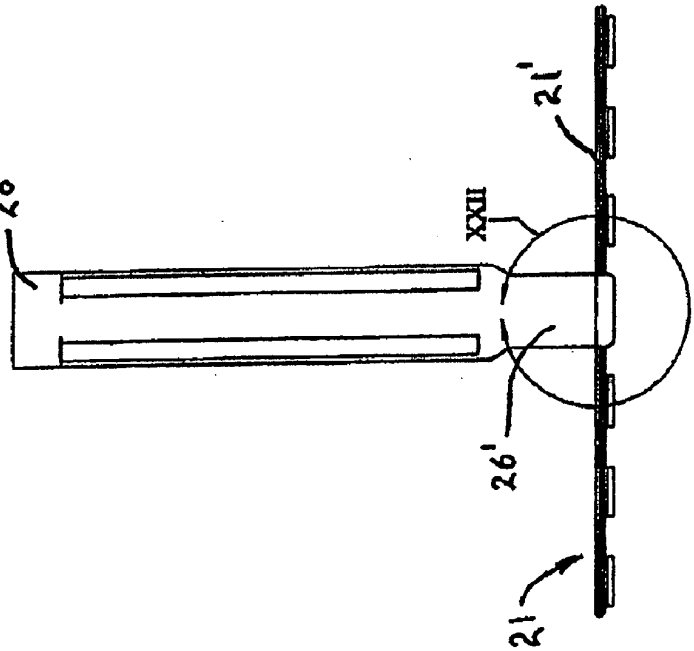

FIG. 24

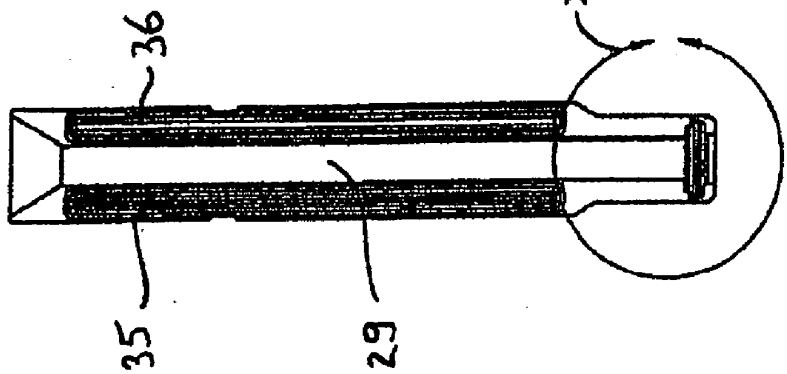

FIG. 25

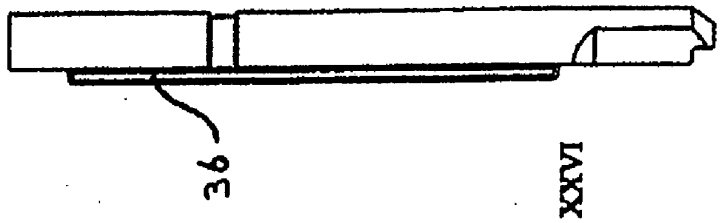

FIG. 26

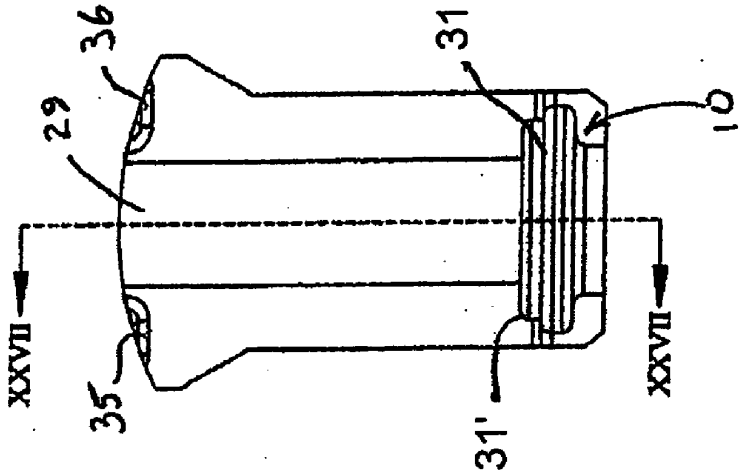

FIG. 27

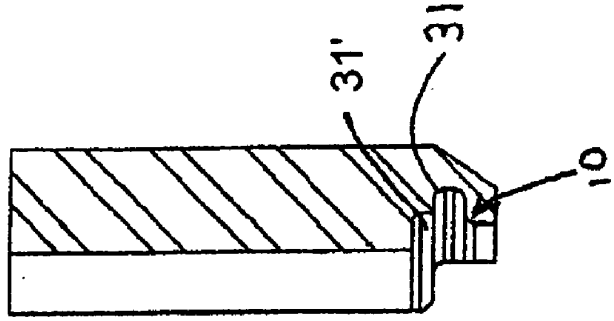

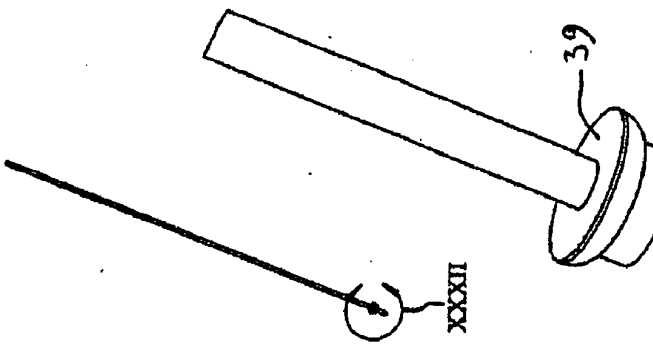

FIG. 30

FIG. 31

FIG. 32

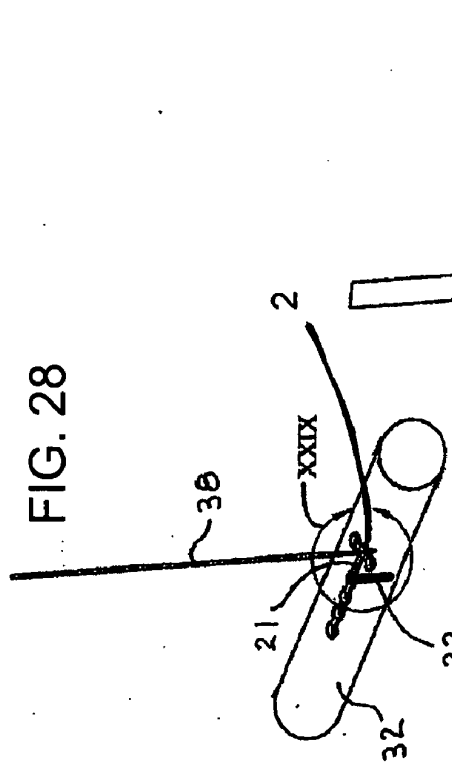

FIG. 28

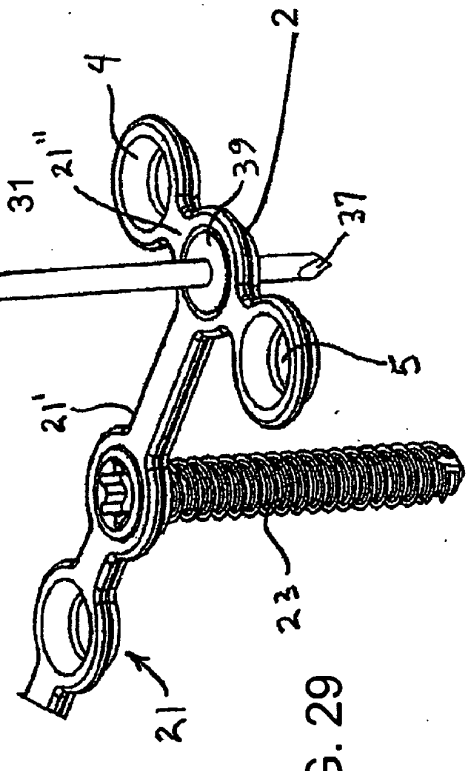

FIG. 29

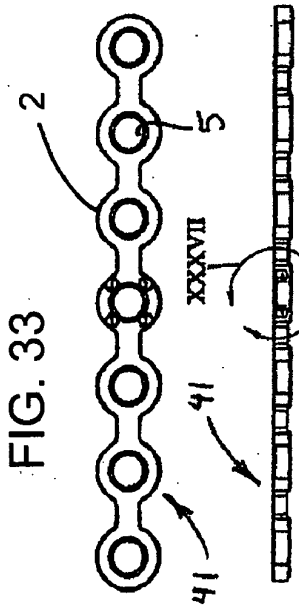

FIG. 33

FIG. 34

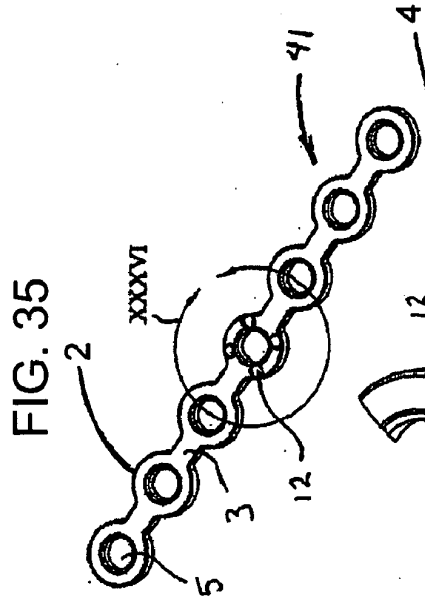

FIG. 35

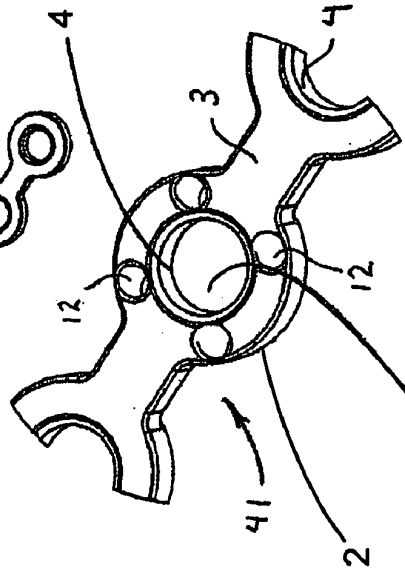

FIG. 36

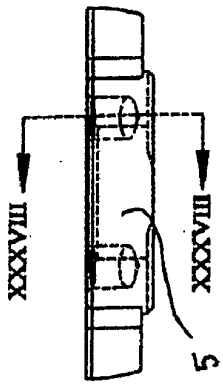

FIG. 37

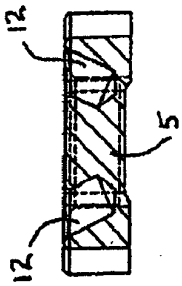

FIG. 38

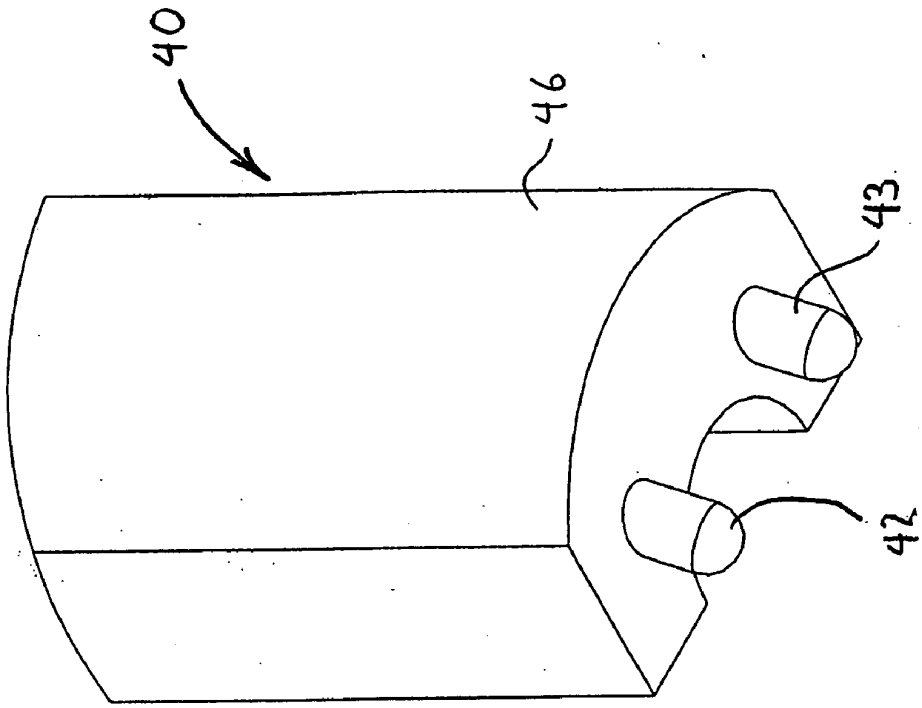

FIG. 41

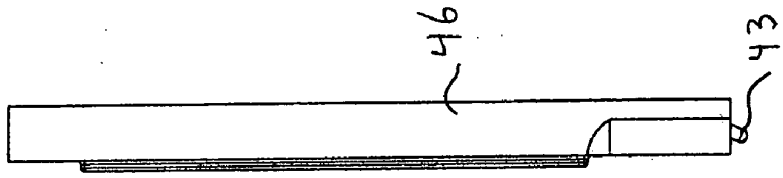

FIG. 40

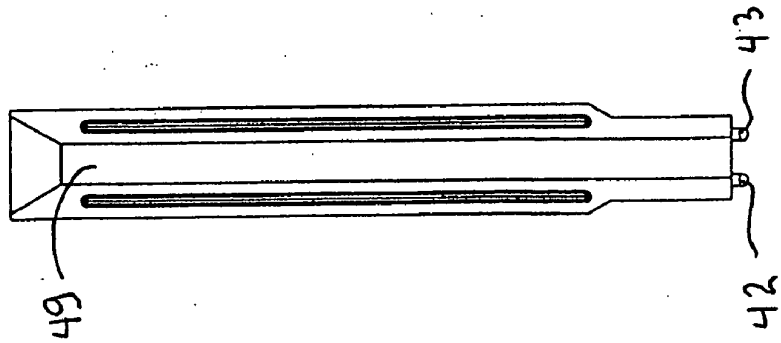

FIG. 39

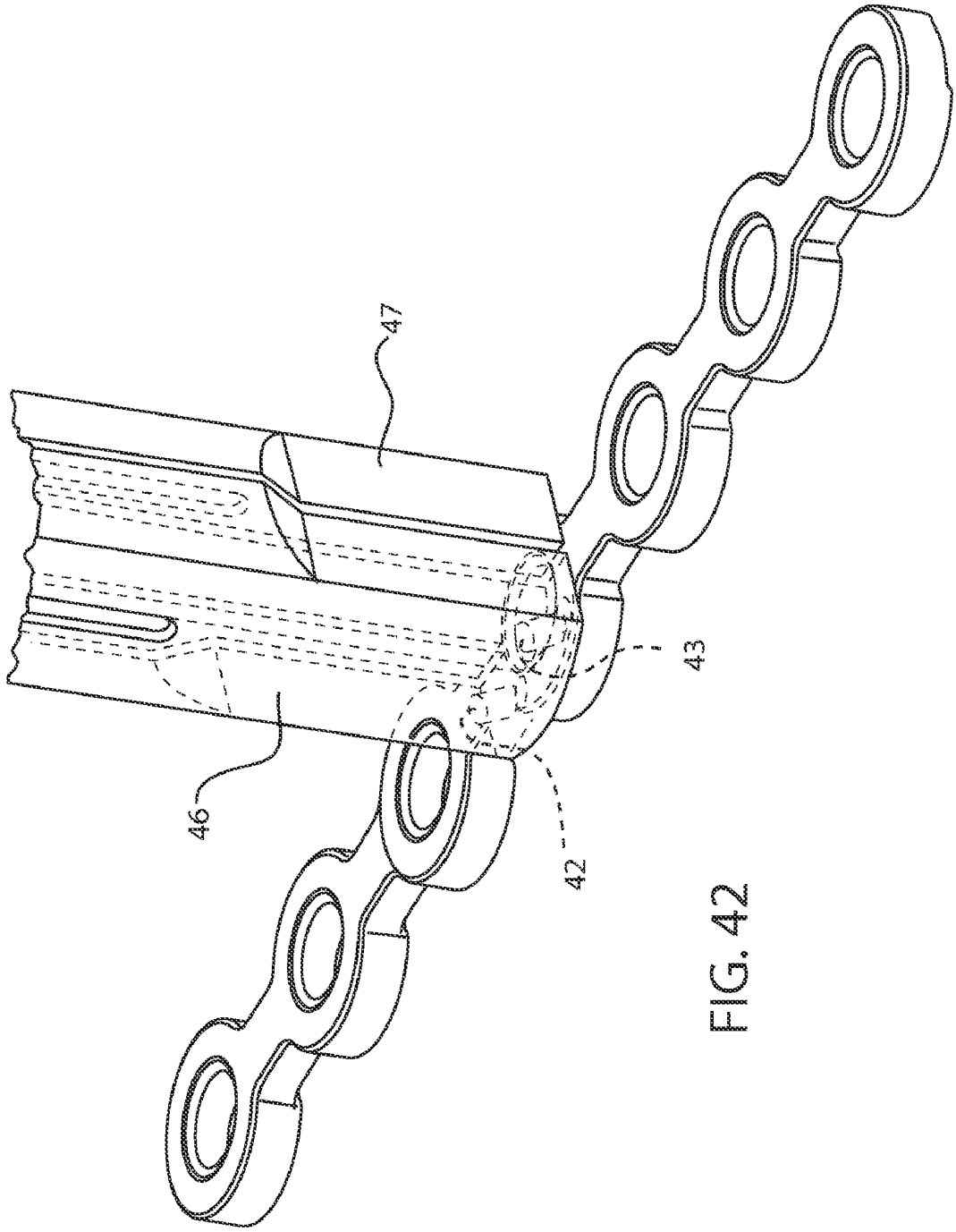

FIG. 42

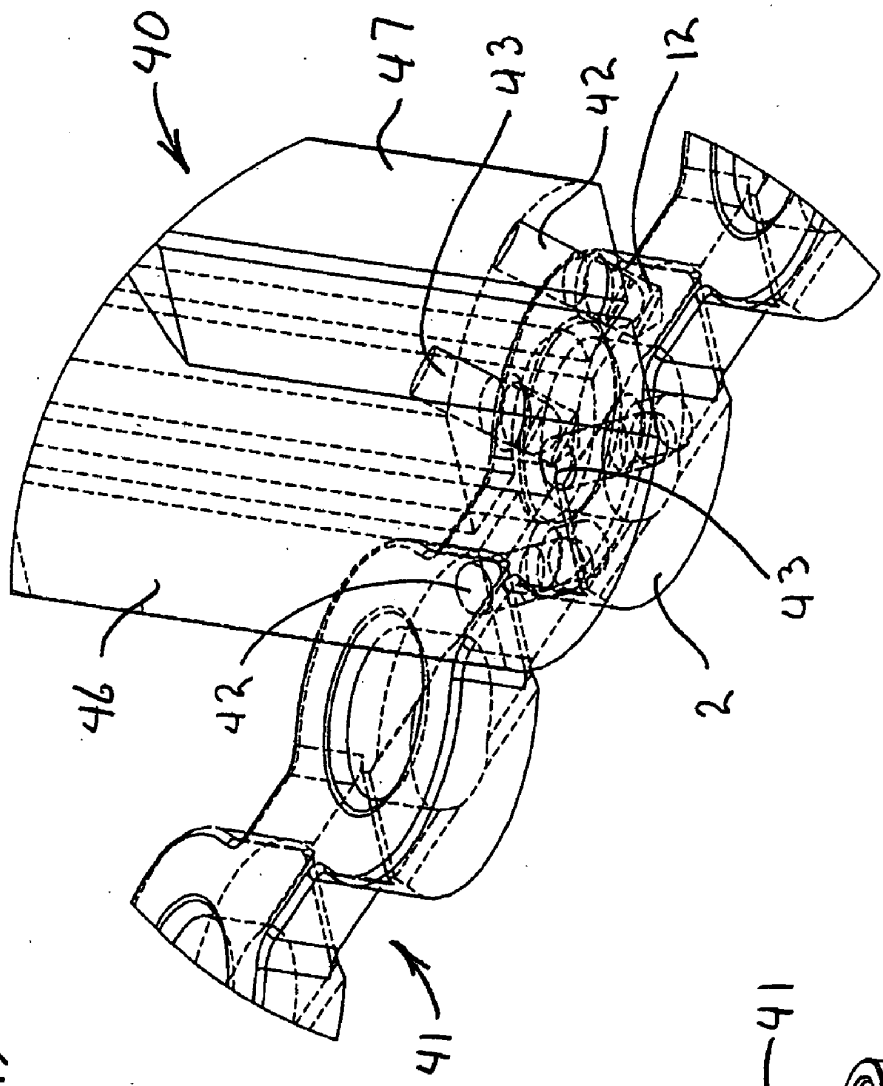

FIG. 44

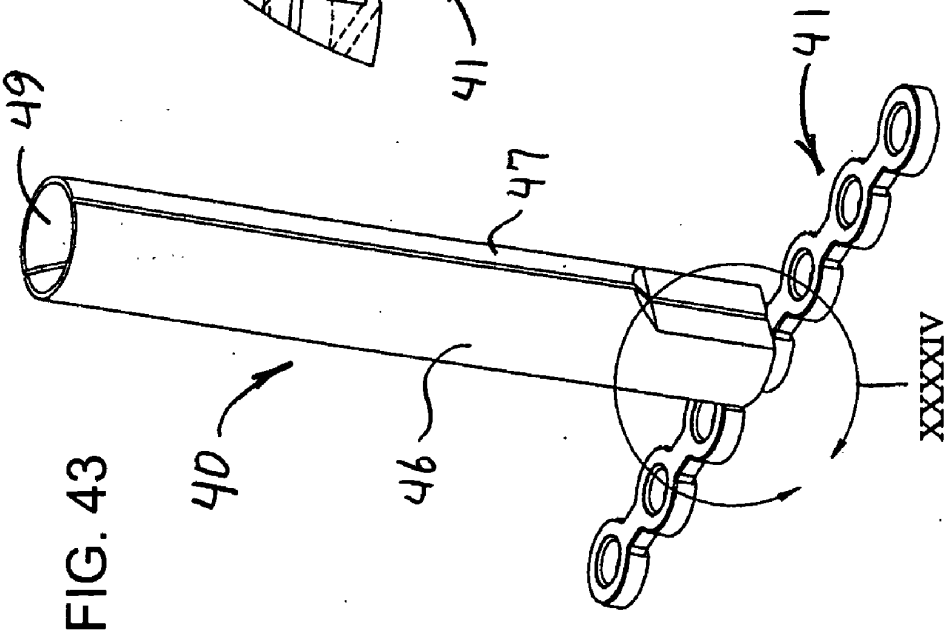

FIG. 43

FIG. 45

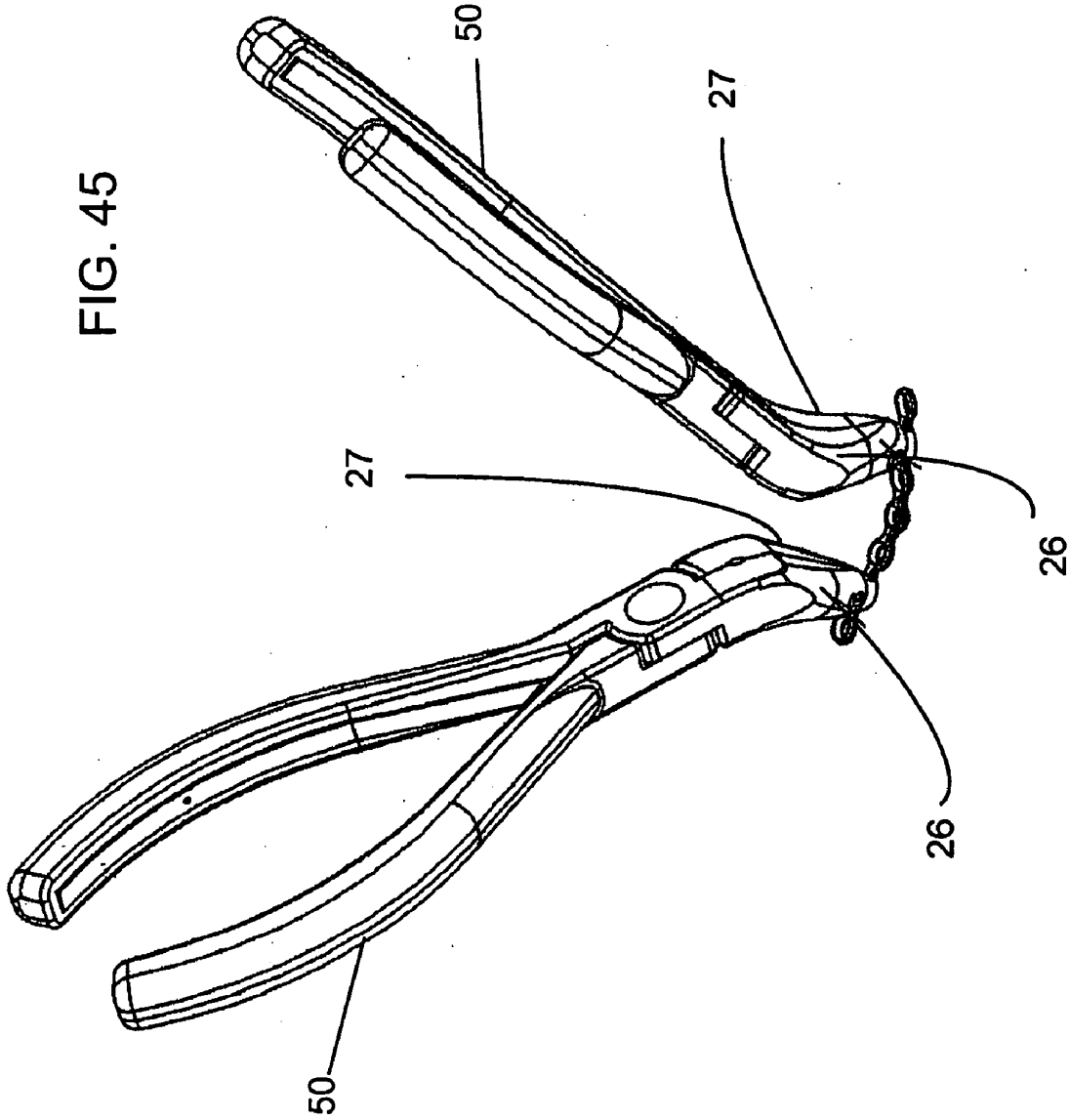

FORMABLE BONE PLATE, CLAMPING APPARATUS, OSTEOTOMY SYSTEM AND METHOD FOR RECONSTRUCTING A BONE

CROSS-REFERENCE TO RELATED APPLICATION

[0001] The present application claims priority to the co-pending Provisional Patent Application No. 61/051,749, filed on May 9, 2008 and entitled "Formable Bone Plate, Clamping Apparatus, Osteotomy System And Method For Reconstructing A Bone", which application is being incorporated herein, by reference, in its entirety.

BACKGROUND OF THE INVENTION

[0002] 1. Field of the Invention

[0003] The invention relates to a formable bone plate, a clamping apparatus, an osteotomy system and a method for small bone reconstruction. Such a plate, apparatus, system and method provide a surgeon with implants and instruments necessary to perform reconstructive bone surgery (osteotomies and fusions) of the small bones of the upper extremity or other parts of the human body, which could eventually include wrist, hand, maxillofacial, foot and ankle surgery.

[0004] 2. Description of the Related Art

[0005] Typical formable bone plates are formed of nodes that provide for screw or pin type of mechanical attachment to the bone and internodes or webs that provide an area more easily deformed, as well as, connection and structural support between nodes.

[0006] Some devices exist to form or shape plates, but some are difficult to use and/or don't give the surgeon optimal forming or shaping control. Ideally, to form the plate, it is optimal to rotate or torque a node in one or more of the X, Y or Z axis while at least one other node is held firmly in place and isolated from the bending forces. This is particularly important if the node that the surgeon wants to isolate has already been affixed to the bone with a screw; otherwise, the bending forces will transmit to the screw and potentially cause pull-out of the same or damage to the bone. In some existing devices and methods, such as disclosed by Huebner in U.S. Pat. No. 7,189,237 the bending forces are not applied at the node, but instead are applied at the internodes or webs. This approach does not fully isolate a node where a screw has been placed from the bending forces, since the node itself is not held firmly. In other existing devices, the node that the surgeon may want to isolate would be held in place by threading a tool or a tool accepting socket into that node. However, this becomes a practical impossibility if a screw has already been affixed to the bone in that node, because the screw occupies the space and the thread where the tool or the tool accepting socket would normally be threaded. That precludes the possibility of isolating a node that has already been affixed to the bone from bending forces.

BRIEF SUMMARY OF THE INVENTION

[0007] It is accordingly an object of the invention to provide a formable bone plate, a node clamping apparatus, an osteotomy system and a method for reconstructing a bone, which overcome the above-mentioned disadvantages of the heretofore-known devices of this general type and which allow a user to easily shape osteotomy plates before, during or after affixing the plate to the bones, thus enabling an improved surgical procedure and a result that is superior to that possible with current devices. The clamping apparatus is intended to be used on the nodes of a plate according to the invention to facilitate optimum clamping.

[0008] The in-situ formable bone plates, node clamping apparatus and osteotomy system according to the invention are constructed in such a way that an appropriately constructed clamp can engage at least one node of the plate while the plate is affixed, partially affixed or not affixed, to the bone. In a preferred embodiment, the plate has a circumferential undercut around each node, where the undercut may or not extend along the internode portions. Correspondingly, in this embodiment, the clamp is constructed in such a way that it will first open, then be placed around a plate's node, and then closed to clamp circumferentially around the node, with a portion of the clamp extending under the undercut portion. This geometry permits secure fixation in all three X-Y-Z axes, permitting forming of the plate in any of these directions. The clamp may, optionally, have a "through hole" drilled through the center to serve as a drill guide during surgical procedures. In this configuration, the clamp is opened, placed around a node, and then clamped into place. Once clamped, the surgeon inserts a drill into the through hole of the clamp and proceeds to drill through the bone. The hole created by such drilling then serves as a pilot hole for a screw to be placed later. Additionally, the clamp of the instant embodiment is constructed to clamp around a node which may already have a screw affixing it to the bone. If desired, the clamp may have a recessed area in the corresponding region where the head of such a screw would normally be positioned when affixed to provide space relief and avoid interference of the screw head. An additional benefit of the presently described embodiment is that the smaller surface area of the plate, created by the undercut, may minimize tissue damage of the periosteum. It is believed that minimizing contact of plate to bone reduces the localized ischemia that may develop subsequent to plate application. Alternate embodiments include plate and clamp features that ensure clamping and three-axis articulation by other measures including usage of engagement holes and pins, and alternate configurations for circumferential clamping around the nodes.

[0009] The plates of the invention have the advantage of being easily formed by the surgeon to match the patient's anatomical circumstances before application, during application or after being partially or fully affixed in-situ.

[0010] Clamps made in accordance with an embodiment of the instant invention are constructed to mate with the plate geometry and selectively and securely hold nodes of a plate. In one particular method of the present invention, a first clamp is attached to a first node and, while holding it securely in position, a second clamp is attached to a second node and rotated in any, or all, of the X-Y-Z axes to form the plate into a desired configuration. Even in a case where the first node has been attached to the bone with a screw, the first clamp isolates the bending forces exerted by the rotation of the second clamp, preventing those forces from being translated to the screw and possibly causing pullout of the same and/or damage the bone. Therefore, using the system and method of the instant invention, it is possible to readjust the plate after screw application and to bend and contour the plate on each internode section during application.

[0011] In one particular embodiment of the instant invention, the plates are provided with "head" portions usually applied at the metaphysis or joint-end of the bone and "shaft" portions usually applied to the shaft of those bones. If desired,

a "neck" portion can join the head and the shaft, for strength, but also for ease of shaping. Osteotomies and fusions are usually performed at the junction of the metaphysis with the shaft. The bendable internode sections and neck of the instant embodiment will allow the adjustment of the angle of correction after the plate has been completely applied.

[0012] The plates according to the invention have the capacity to be easily shaped ex-situ, that is, before application to the bone; and in-situ, that is, contoured to the bone during placement, and also allow a final correction to be made to their shape after they have been finally affixed to the bone. The plates also present the ability to accept compression, fixed angle and/or variable angle screws.

[0013] The plates according to a preferred embodiment of the invention are constructed to fit common reconstructive clinical needs and present dedicated deformable sections for correction adjustment. If desired, they may additionally have fixed angle K-wire holes for facilitating implant application or allow the use of K-Tacks for the same purpose.

[0014] The plates according to the invention come in basic shapes that allow the surgeon to easily cut them to length leaving a biologically acceptable cut surface.

[0015] If further desired, the plates according to the invention can also be provided with a step-compression/distraction mechanism to facilitate lengthening and shortening of bones.

[0016] Note that the plates according to the invention can be made in different sizes and shapes such as, but without being limited to, the examples enumerated below:

[0017] 1. Plates for radial and ulnar osteotomy using, for example, 3.5/2.5 mm screws for stepped compression-distraction with dedicated head portions and for carpal bone fixation for arthrodesis/ligament repair using arched and circular shapes and 2.5 mm screws.

[0018] 2. Plates for metacarpal osteotomy using 2.5 mm screws, which are straight with a head portion.

[0019] 3. Plates for phalangeal osteotomy using 2.0 mm screws, which are straight with a head portion.

[0020] 4. Plates for a scaphoid reconstruction device.

[0021] 5. Plates for a total wrist fusion device.

[0022] Other features which are considered as characteristic for the invention are set forth in the appended claims.

[0023] Although the invention is illustrated and described herein as embodied in a formable bone plate, a clamping apparatus, an osteotomy system and a method for reconstructing a bone, it is nevertheless not intended to be limited to the details shown, since various modifications and structural changes may be made therein without departing from the spirit of the invention and within the scope and range of equivalents of the claims.

[0024] The construction of the invention, however, together with additional objects and advantages thereof will be best understood from the following description of the specific embodiments when read in connection with the accompanying drawings.

BRIEF DESCRIPTION OF THE SEVERAL VIEWS OF THE DRAWING

[0025] FIG. **1** is a diagrammatic, top-plan view of a first embodiment of an in-situ formable bone plate according to the invention having undercuts on the bottom surface of the plate;

[0026] FIG. **2** is a perspective view of the bone plate shown in FIG. **1**;

[0027] FIG. **3** is a side-elevational view of the bone plate shown in FIGS. **1** and **2**;

[0028] FIG. **4** is an enlarged, cross-sectional view of the bone plate, taken along the line IV-IV of FIG. **3**, in the direction of the arrows;

[0029] FIG. **5** is an enlarged, top-plan view of the bone plate shown in FIGS. **1-4**;

[0030] FIGS. **6**A, **7**A, **8**A, **9**A, **10**A, **11**A and **12**A are top-plan views of different nodes of the bone plate shown in FIG. **5** and FIGS. **6**B, **7**B, **8**B, **9**B, **10**B, **11**B and **12**B are respective cross-sectional views taken along the lines VI-VI to XII-XII of FIGS. **6**A, **7**A, **8**A, **9**A, **10**A, **11**A and **12**A, showing different embodiments of undercuts of the bone plate;

[0031] FIG. **13**A is a top-plan view of a second embodiment of an in-situ formable bone plate according to one particular embodiment of the invention having similar undercuts on the top surface and the bottom surface of the plate.

[0032] FIG. **13**B is a perspective view of the plate shown in FIG. **13**A.

[0033] FIG. **13**C is a cross-sectional view taken along the lines XIII of FIG. **13**A.

[0034] FIGS. **14**A and **14**B are top-perspective and bottom-perspective views of the bone plate shown in FIGS. **1-5**;

[0035] FIG. **15** is a perspective view of a clamp fitted to a T-shaped bone plate with screws;

[0036] FIG. **16** is an enlarged, fragmentary, perspective view of a portion XVI of FIG. **15**;

[0037] FIGS. **17** and **18** are respective front-perspective and side-perspective views of the clamp fitted to the T-shaped bone plate having compression screws;

[0038] FIG. **19** is a longitudinal-sectional view taken along the line XIX-XIX of FIG. **17**, in the direction of the arrows;

[0039] FIG. **20** is an enlarged, fragmentary, longitudinal-sectional view of a portion XX of FIG. **19**;

[0040] FIG. **21** is a side-elevational view of the bone plate and the clamp with a clamping tube removed;

[0041] FIG. **22** is an enlarged, fragmentary, end-elevational view of a portion XXII of FIG. **21**;

[0042] FIG. **23** is a longitudinal-sectional view taken along the line XXIII-XXIII of FIG. **22**, in the direction of the arrows;

[0043] FIGS. **24** and **25** are respective side-elevational and front-elevational views of the clamp showing a drill guide thereof;

[0044] FIG. **26** is an enlarged, fragmentary, side-elevational view of a portion XXVI of FIG. **24**;

[0045] FIG. **27** is a longitudinal-sectional view taken along the line XXVII-XXVII of FIG. **26**, in the direction of the arrows;

[0046] FIG. **28** is a perspective view of a T-shaped bone plate, compression screw and K-wire on a bone segment;

[0047] FIG. **29** is an enlarged, fragmentary, perspective view of a portion XXIX of FIG. **28**;

[0048] FIG. **30** is a side-elevational view of the K-wire;

[0049] FIG. **31** is a perspective view of the K-wire;

[0050] FIG. **32** is an enlarged, fragmentary, perspective view of a portion XXXII of FIG. **31**;

[0051] FIGS. **33**, **34** and **35** are respective top-plan, side-elevational and perspective views of another embodiment of an in-situ formable bone plate according to the invention, having engagement holes;

[0052] FIG. **36** is an enlarged, fragmentary, perspective view of a portion XXXVI of FIG. **35**;

[0053] FIG. **37** is an enlarged, fragmentary, side-elevational view of a portion XXXVII of FIG. **34**;

[0054] FIG. **37** is an enlarged, fragmentary, side-elevational view of a portion XXXVII of FIG. **34**;

[0055] FIG. **38** is a cross-sectional view taken along the line XXXVIII-XXXVIII of FIG. **37**, in the direction of the arrows;

[0056] FIGS. **39** and **40** are respective side-elevational and front-elevational views of a further embodiment of a clamp in accordance with the present invention having engagement pins;

[0057] FIG. **41** is an enlarged, fragmentary, perspective view of the clamp of FIGS. **39** and **40**;

[0058] FIG. **42** is an enlarged, fragmentary, perspective view of the clamp of FIGS. **39-41** engaging the bone plate of FIGS. **33-38**;

[0059] FIG. **43** is a perspective view of the clamp and bone plate of FIG. **42**;

[0060] FIG. **44** is a fragmentary, perspective view of a portion XXXXIV of FIG. **43**, showing the engagement pins and holes; and

[0061] FIG. **45** is a perspective view of a further embodiment of the instant invention including clamps where the jaws are built into the distal end of a pliers.

DETAILED DESCRIPTION OF THE INVENTION

[0062] Referring now to the figures of the drawings in detail and first, particularly, to FIGS. **1-4** thereof, there is seen a first embodiment of a bone plate **1** according to one particular embodiment of the invention, having a plate body with seven nodes **2** and webs or internodes **3**, therebetween. However, this is not meant to be limiting, as the bone plate **1** may have more or fewer than seven nodes, as desired, and may be linear, T-shaped, L-shaped, Y-shaped, arched, curved or any combination of shapes, as will be discussed further below. The nodes **2** each have an inner surface **4**, which can be spherical, aspherical, frustoconical, cylindrical or any other geometric shape as required for seating or engaging the complementarily shaped head of a screw, surrounding a hole **5** for permitting passage of the shaft of a screw **23**, as is best seen in FIGS. **15** and **16**. Each node **2** also has a clamp engagement section **6**, as will be discussed further below.

[0063] FIG. **5** shows a bone plate **1'** with nodes **2** and internodes or webs **3**, while FIGS. **6**A to **12**B each show a possible form of a node **2** of the bone plate **1'** in respective top-plan and cross-sectional views. More specifically, FIGS. **6**A and **6**B show a node **2** without an engagement section, for purposes of comparison. FIGS. **7**A and **7**B show a node **2** with an engagement section in the form of an annular or circumferential step **10**. FIGS. **8**A and **8**B show a node **2** with an engagement section in the form of two radial blind holes **11**. FIGS. **9**A and **9**B show a node **2** with an engagement section in the form of four oblique blind engagement holes **12**. FIGS. **10**A and **10**B show a node **2** with an engagement section in the form of a concave annular or circumferential V-shaped radial recess **13**. FIGS. **11**A and **11**B show a node **2** with an engagement section in the form of two L-shaped undercuts **14**. FIGS. **12**A and **12**B show a node **2** with an engagement section in the form of frustum surface **15** of a cone. It is noted in this regard that the engagement section with the engagement holes **12** shown in FIGS. **9**A and **9**B are intended to cooperate with a clamp **40** designed in accordance with one particular embodiment of the invention discussed below. It must also be understood that more than one, or even all, of the nodes may have engagement sections. The node configurations **2** of the plate **1'** shown in FIGS. **6**A-**12**A are examples of possible node configurations consistent with the present invention. However, it can be seen from the foregoing that additional node configurations and geometries are possible for the nodes **2**, while still remaining within the scope of the instant invention.

[0064] FIGS. **13**A and **13**B show a second embodiment of bone plate **1** with nodes **2** and internodes or webs **3**, inner surface **4**, which can be spherical, aspherical, frusto-conical, cylindrical or any other geometric shape as required for seating or engaging the complementarily shaped head of a screw, surrounding a circular hole **5** or elongated slot **5'** for permitting passage of the shaft of a screw. FIG. **13**C shows a cross section of a node **2** with an engagement section conformed by a convex annular or circumferential V-shaped radial projection **16**. The engagement section is symmetrical which allows the plate to be used with its upper or lower surface, indistinctly, adjacent to the bone.

[0065] FIGS. **14**A and **14**B are respective top and bottom perspective views of a bone plate **1** according to one particular embodiment of the invention, having the nodes **2**, the internodes **3**, the inner surfaces **4** and the screw holes **5**. The plate **1** can have a variety of shapes and/or geometries in accordance with the instant invention. For example, a T-shaped bone plate **21** having a leg **21'**, a crosspiece **21"** and nodes **2**, is shown in FIG. **15**. Referring now to FIG. **15**, it may be seen that a clamp **20** in accordance with one embodiment of the instant invention is placed over, and engages with, a node **2**, thus receiving a head **22** of a screw **23** passing through a hole **5** in one of the nodes **2**. From FIG. **16** it can be seen that the head of each screw **23** has a socket **24**. The sockets **24** have polygonal, for example hexagonal, hexalobular or multilobular, surfaces for receiving a driver, wrench or screwdriver for tightening and loosening the screws. FIGS. **15** and **16** also show that the present particular embodiment of the clamp **20** has clamping jaws **26**, **27** engaging the bone plate **21** and a clamping tube **28** sliding over and holding the clamping jaws **26**, **27** in place. The clamping jaws **26**, **27** each have a respective relief **26'**, **27'** and the clamping tube **28** has a drill guide hole **29** and a handle **30**. The drill guide hole **29** continues through the clamping jaws **26**, **27** to permit drill access to the bone as seen in FIGS. **19** and **20**.

[0066] FIGS. **17** and **18** respectively show the clamp **20** from the side of the T-shaped bone plate **21** and from the end of the T-shaped bone plate **21**, screwed into a bone **32** by the screws **23**. Screws **23** may be compression screws, fixed angle and/or variable angle screws, as desired. FIG. **19** is a cross section that shows the clamping tube **28** and the handle **30** and FIGS. **19** and **20** show the drill guide hole **29** and illustrate how the jaws **26**, **27** engage the node **2** receiving the head **22** of screw **23**.

[0067] FIGS. **21** and **22** show a side view elevation of one of the clamping jaws **26** with relief **26'** disposed over a node **2** of the bone plate **21**. FIG. **23**, in a manner similar to FIG. **20**, shows how the clamping jaws **26**, **27** engage a node **2** nested therein by gripping the annular or circumferential step **10** of the engagement section shown in FIGS. **7**A and **7**B. In FIGS. **24** and **25** the clamp locking features **35**, **36** on both sides of the drill guide hole **29** are intended to assist in aligning the two parts as they come together and prevent the clamping jaws from sliding apart once clamped. The locking features may also be accomplished with holes and pins. A socket **31**, shaped to engage a node **2** is nested in the step **10**, is additionally seen in FIGS. **26** and **27**. The socket may include a

screw head relief **31'** to avoid interference of a screw head and permit proper engagement of socket **31** into node **2** if a screw has been placed in that node.

[0068] Referring to FIGS. **19**, **20**, **23**, **24**, **25**, **26** and **27**, a clamp **20** is used by placing jaws **26**, **27** having lower ends with sockets **31** that are complementary to one of the engagement sections **10**, **11**, **13**, **14**, **15**, **16** shown in FIGS. **7**B-**12**B and FIG. **13**C around a node **2**, so as to engage the engagement section. The clamping tube **28** of FIG. **18** is then slid over the jaws to lock them in place by aligning locking features **35**, **36**. Alternatively, as seen in FIG. **45** the clamping jaws **26**, **27** may be implemented as the distal jaws of pliers **50** which are locked in place by the action of compressing the proximal handles of the pliers **50**.

[0069] FIG. **28** shows a K-wire or Kirschner wire **38** inserted through a node **2** of the bone plate **21** into a bone **32** as a temporary anchor, as well as a screw **23**, for example, a compression screw, attaching the bone plate to the bone. The K-wire **38** is shown in side and oblique-elevational views in FIGS. **30** and **31** and the enlarged illustration of FIG. **32** shows that a button **39** is attached to the K-wire **38** and a self-drilling tip **37** is formed at the end of the K-wire. As is seen in FIG. **29**, the button **39** fits the contour of surface **4** while allowing a portion of the K-wire **38** to pass through the hole **5**. The button **39** is intended to prevent the K-wire **38** from penetrating the bone more than necessary for achieving temporary anchoring.

[0070] A further embodiment of the bone plate and clamp of the present invention is illustrated in FIGS. **33**-**44**. In contrast to the previously described embodiments of the invention, which use a clamp **20** having sockets **31** matching engagement sections **10**, **11**, **13**, **14**, **15** and **16** at the lower surface or lateral surface of a plate **1**, **21**, the presently described embodiment uses a clamp **40** having engagement pins **42**, **43** that engage the four oblique blind engagement holes **12** of the plate. See also, for example, engagement holes **12** of the engagement section shown in FIGS. **9**A and **9**B.

[0071] More specifically, FIGS. **33**, **34**, **35** and **36** show a bone plate **41** having a plate body with nodes **2** including the oblique blind engagement holes **12** and internodes or webs **3** between the nodes **2**. The nodes **2** each have an inner surface **4** surrounding a hole **5** for accepting a screw. The actual oblique direction of the engagement holes **12** is best seen in the cross-sectional views of FIGS. **37** and **38**.

[0072] Referring now to FIGS. **43** and **44**, the clamp **40** once again has two clamping jaws **46**, **47** surrounding a drill guide hole **49** and the engagement pins **42**, **43** protruding from the clamping jaws, as is better seen in FIGS. **39**, **40**, **41** and **42**. FIGS. **43** and **44** illustrate how the engagement pins **42**, **43** of each clamping jaw **46**, **47** of the clamp **40** engage the oblique engagement holes **12** in a node **2** of the bone plate **41**. The clamping tube **28** of FIGS. **17**, **18** and **19**, which for simplicity is not illustrated in FIGS. **33**-**44**, is slid over the clamping jaws **46**, **47** to lock them in place, after placing the engagement pins **42**, **43** in the engagement holes **12** of a node **2**. As additionally described in connection with the other embodiments, the clamping jaws **46**, **47** of the present embodiment may be implemented by the distal jaws of pliers **50** which are locked into place by compressive action on the proximal pliers handles, as shown more particularly in FIG. **45**.

[0073] Referring now to FIGS. **1**-**45**, a system of the invention operates as follows: A clamp **20**, **40**, **50** can engage the plate **1**,**1'**, **21**, **41** while the plate is affixed, partially affixed or not affixed at all to the bone. A first clamp **20**, **40**, **50** is opened, then placed circumferentially around a node, with a portion of the clamp extending under the undercut portion or surface or into the lateral recesses or holes or with the engagement pins into the engagement holes. This secures the first node **2** assuring that any bending forces created by rotating or torqueing will be transmitted to the first clamp **20**, **40**, **50**, shielding any screw **23** which may be present at the first node **2** from these forces, thereby prohibiting screw 'pull-out'. Then, a second clamp **20**, **40**, **50** is opened and secured in a similar way to a second node **2**. Rotating or torqueing the second clamp generates bending forces which cause bending or formation of the plate in the direction of any of the X, Y, and/or Z axes.

[0074] In particular embodiments of the invention, a drill guide hole **29**, **49** in the center of the clamp **20**, **40** serves as a drill guide during surgical procedures. After a clamp **20**, **40** has been clamped into place, the surgeon inserts a drill into the guide hole **29**, **49** of the clamp **20**, **40** and proceeds to drill through the bone. The hole created by such drilling then serves as a pilot hole for a screw **23** to be placed later. Additionally, the clamp **20**, **40**, **50** is constructed to clamp around a node **2** which may already have a screw **23** affixing it to the bone. The plates **1**,**1'**, **21**, **41** of the invention have the advantage of being able to be formed by the surgeon to match the patient's anatomical circumstances before application, during application or after being partially or fully affixed in-situ. The clamps **20**, **40**, **50** of the invention are constructed to mate with the plate geometry and selectively and securely hold the nodes **2** of a plate. Bending the plate **1**,**1'**, **21**, **41** with a clamp **20**, **40**, **50** while another clamp **20**, **40**, **50** is attached and held in position firmly at a node **2** isolates the bending forces preventing them from being translated to the screws **23**. It is possible to readjust sections of the plate **1**,**1'**, **21**, **41** after screw application and to bend and contour the plate at each internode section **3** during application. The bending internode sections of the plates of the instant invention allow the adjustment of the angle of correction even after the plate has been completely applied. The plates, made in accordance with the instant invention can be easily shaped in-situ, that is, contoured to the bone during placement, and a final correction can be made after they have been finally attached to the bone with screws. Thus, the plates of the invention present the ability to accept compression, fixed angle and/or variable angle screws. The plates fit common reconstructive clinical needs and present dedicated deformable sections for correction adjustment. Additionally, as described herein, holes may be included for K-wires, to facilitate implant application and allow the use of K-Tacks with limiting buttons, for the same purpose.

1. A formable bone plate, comprising:

a plate body having a plurality of nodes and internodes between said nodes;

said nodes having holes formed therein for receiving screws or wires to be screwed or placed into a bone; and

at least one of said nodes having an engagement section for engagement by a clamp to permit bending at least one of said internodes to contour the plate to the bone in-situ or ex-situ and when at least partly screwed to or not screwed to the bone.

2. The bone plate according to claim **1**, wherein at least one of said nodes has an inner surface surrounding said hole for seating the head of a screw.

3. The bone plate according to claim **1**, wherein said engagement section is an annular or circumferential step formed in a lower surface of said least one node.

4. The bone plate according to claim **1**, wherein said engagement section includes two radial blind holes formed in a lateral surface of said at least one node.

5. The bone plate according to claim **1**, wherein said engagement section includes a group of engagement holes formed in an upper surface of said at least one node.

6. The bone plate according to claim **5**, wherein said group of engagement holes includes four oblique blind engagement holes.

7. The bone plate according to claim **1**, wherein said engagement section is an annular or circumferential V-shaped radial recess formed in a lateral surface of said at least one node.

8. The bone plate according to claim **1**, wherein said engagement section is an annular or circumferential V-shaped radial projection formed in a lateral surface of said at least one node.

9. The bone plate according to claim **1**, wherein said engagement section includes two L-shaped undercuts formed in a lower surface of said at least one node.

10. The bone plate according to claim **1**, wherein said engagement section is a frustoconical lower surface of said at least one node.

11. The bone plate according to claim **1**, wherein said plate body is nonlinear-shaped and includes a leg and a crosspiece, and said nodes are formed in said leg and in said crosspiece.

12. A bone clamping apparatus, comprising:

two clamping jaws each having a lower end with a socket for engaging an engagement section of a node of a bone plate to be screwed to a bone.

13. The bone clamping apparatus according to claim **12**, which further comprises:

a clamping tube to be slid over said clamping jaws for locking said clamping jaws in place at the engagement section; and

a handle for manipulating said clamping jaws to permit bending at least one internode between two nodes of the bone plate to contour the bone plate to the bone in-situ or ex-situ and when at least partly screwed to or not screwed to the bone.

14. The bone clamping apparatus according to claim **12**, wherein said handle is attached to said clamping tube.

15. The bone clamping apparatus according to claim **12**, wherein said clamping jaws and said clamping tube have a drill guide hole formed therein for guiding drilling into the bone for later placement of a screw.

16. The bone clamping apparatus according to claim **12**, wherein said sockets are configured for engaging an annular or circumferential step formed in a lower surface of a node.

17. The bone clamping apparatus according to claim **12**, wherein said sockets are configured for engaging two radial blind holes formed in a lateral surface of a node.

18. The bone clamping apparatus according to claim **12**, wherein said sockets have engagement pins configured for engaging a group of engagement holes formed in an upper surface of a node.

19. The bone clamping apparatus according to claim **12**, wherein said sockets each have two of said engagement pins for together engaging four of said engagement holes.

20. The bone clamping apparatus according to claim **12**, wherein said sockets are configured for engaging an annular or circumferential V-shaped radial recess formed in a lateral surface of a node.

21. The bone clamping apparatus according to claim **12**, wherein said sockets are configured for engaging an annular or circumferential V-shaped radial projection formed in a lateral surface of a node.

22. The bone clamping apparatus according to claim **12**, wherein said sockets are configured for engaging two L-shaped undercuts formed in a lower surface of a node.

23. The bone clamping apparatus according to claim **12**, wherein said sockets are configured for engaging a frusto-conical lower surface of a node.

24. An osteotomy system, comprising:

a formable bone plate including:

a plate body having a plurality of nodes and internodes between said nodes,

said nodes having holes formed therein for receiving screws or wires to be screwed or placed into a bone, and

at least one of said nodes having an engagement section; and

a bone clamping apparatus including:

two clamping jaws each having a lower end with a socket for engaging said engagement section.

25. The osteotomy system according to claim **24**, wherein said bone clamping apparatus includes:

a clamping tube to be slid over said clamping jaws for locking said clamping jaws in place at said engagement section, and

a handle for manipulating said clamping jaws to permit bending at least one of said internodes to contour said bone plate to the bone in-situ or ex-situ and when at least partly screwed to or not screwed to the bone.

26. The osteotomy system according to claim **24**, wherein at least one of said nodes has an inner surface surrounding said hole for seating the head of a screw.

27. The osteotomy system according to claim **24**, wherein said clamping jaws and said clamping tube have a drill guide hole formed therein for guiding drilling into the bone for later placement of a screw.

28. The osteotomy system according to claim **24**, wherein said engagement section is an annular or circumferential step formed in a lower surface of said at least one node, and said sockets are configured for engaging said step.

29. The osteotomy system according to claim **24**, wherein said engagement section includes two radial blind holes formed in a lateral surface of said at least one node, and said sockets are configured for engaging said radial blind holes.

30. The osteotomy system according to claim **24**, wherein said engagement section includes a group of engagement holes formed in an upper surface of said at least one node, and said sockets have engagement pins configured for engaging said engagement holes.

31. The osteotomy system according to claim **30**, wherein said group of engagement holes includes four oblique blind engagement holes, and said sockets each have two of said engagement pins for together engaging said four engagement holes.

32. The osteotomy system according to claim **24**, wherein said engagement section is an annular or circumferential

V-shaped radial recess formed in a lateral surface of said at least one node, and said sockets are configured for engaging said recess.

33. The osteotomy system according to claim **24**, wherein said engagement section is an annular or circumferential V-shaped radial projection formed in a lateral surface of said at least one node, and said sockets are configured for engaging said projection.

34. The osteotomy system according to claim **24**, wherein said engagement section includes two L-shaped undercuts formed in a lower surface of said at least one node, and said sockets are configured for engaging said undercuts.

35. The osteotomy system according to claim **24**, wherein said engagement section is a frustoconical lower surface of said at least one node, and said sockets are configured for engaging said frustoconical lower surface.

36. The osteotomy system according to claim **24**, wherein said plate body is T-shaped and includes a leg and a crosspiece, and said nodes are formed in said leg and in said crosspiece.

37. A method for bone reconstruction, which comprises the following steps:

providing a formable bone plate including a plate body having a plurality of nodes, internodes between the nodes, holes in the nodes and an engagement section at least at one of the nodes;

providing at least one bone clamping apparatus including two clamping jaws each having a lower end with a socket;

engaging the engagement section of at least one of the nodes with the sockets; and

placing screws or wires through the holes in at least some of the nodes into the bone.

38. The method according to claim **37**, which further comprises:

sliding a clamping tube over the clamping jaws for locking the clamping jaws in place at the engagement section; and

manipulating the clamping jaws with a handle for bending at least one of the internodes to contour the bone plate to a bone in-situ or ex-situ and when at least partly screwed to or not screwed to the bone.

39. The method according to claim **37**, wherein the handle is attached to the clamping tube.

40. The method according to claim **37**, which further comprises drilling through a drill guide hole formed in the clamping jaws and in the clamping tube into the bone for later placement of a screw.

* * * * *