IN THE UNITED STATES PATENT AND TRADEMARK OFFICE

Utility Patent Application (Provisional)

Bone Implant and Means of Insertion

Hartdegen, Vernon, Collierville, TN
Hollis, Michael, Collierville, TN

Treace Medical Concepts, Inc. v. Paragon 28, Inc.
IPR2027-00014
Treace Ex. 1007

CROSS-REFERENCE TO RELATED APPLICATIONS

This provisional application is not related to any other applications

STATEMENT REGARDING FEDERALLY SPONSORED RESEARCH OR DEVELOPMET

This Application is not associated with any federally sponsored research

REFERENCE TO SEQUENCE LISTING, A TABLE, OR A COMPUTER PROGRAM LISTING COMPACT DISK APPENDIX

Not Applicable

Background of the Invention

The present invention is in the technical field of medical devices. More particularly, the present invention is in the technical field of bone fixation or arthrodesis or deformity correction. The invention relates to a fixation system for bones of all types with an inserter and implant. Such systems are used in Osteosynthesis (bone fusion), wherein the implant bridges the fracture generating compression (or distraction) across the bone members. The compression (or distraction) is generated by the properties of the implant and the different configurations of the implant. For example, the implant may have a first configuration when in free-state and a second configuration required for insertion. It is desirable for optimal implant placement and function to be able to pre-assemble or attach the implant to an inserter to facilitate placement of the implant on or in the bone. The implant may be indicated for the various bones of the entire skeleton. A "bone fixation device" or implant may include any of a variety of devices that secure an object to a bone, including but not limited to staples, bone plates, modular staples, bone screws, pins, blades, suture anchors, and the like.

The present invention seeks to remedy the problems of the prior art. The invention may produce a system that allows placement of an implant in its final required position with or without additional manipulation. In addition, the present invention will maintain an implant in a first configuration allowing the implant to assume at least a second configuration once placed in its final position. The current invention may not rely on additional implant positioning manipulation once the inserter is removed or it may be manipulated after insertion. Also, the current invention may incorporate other necessary features into the inserter and implant that are required for final placement. For example the inserter may allow preparation for drill holes, bone screws, etc. and or act to position to the implant in a particular location or position.

Summary of the Invention

The present invention may include a fastening device or implant and a means of insertion and or manipulation. The fastening device may be a bone staple, bone plate, modular staple, or the like. The fastening device may have elastic properties or other material properties that allow the device to have at least two configurations or configurable to various positions placed on the bone. The free-state or implanted-state of the device may provide compression (or distraction) across two or more bone members. The inserter may hold the fastening device (or implant) in a configuration that is different than the free-state or implanted-state configuration. This first configuration may be useful in placement of the implant onto or into bone members. Fastening device and implant are used interchangeably in this application and are not intended to be limiting in nature.

The present invention may have the inserter pre-assembled or affixed to the implant at the time of use. The inserter may be assembled to the implant at the time of use. The inserter may be temporarily attached to the implant to facilitate the final implantation of the implant device. The inserter may have features that engage the implant to facilitate the inserter maintaining the first implant configuration. Similarly, the implant may have features for engaging the inserter. The inserter may be attached to or engaged with the implant in such a way that allows removal of the inserter once the implant is in its final position on or in the bone. Once the inserter is removed, additional manipulation may not be needed to position the implant in its final placement. Likewise the implant may be manipulated to achieve final orientation (e.g. compression). The inserter may engage the implant such that it does not interfere with final implant placement.

The present invention may have an implant or portion of an implant that is made of an elastic material or a material that may allow the implant to have multiple configurations. The ability of the implant to have multiple configurations may be a result of the material properties that have shape memory or super elastic property or it may be a result of manipulation (mechanical, physical, chemical or otherwise) of the implant to create a second configuration. The implant may be held in one configuration during insertion or removal and returns to or is placed in another configuration in its free-state or implanted-state. The implant may have features for engaging the bone. These features may include bone screws, leg members, or other features for attaching the implant to bone. The implant may have features for engaging the inserter. The engagement between the implant and inserter may allow the implant to be placed in its final position without the inserter interfering with this final positioning. The implant may be placed in its final position while the inserter is still engaged to the implant eliminating the need for final/secondary seating. The inserter may be removed from the implant in a direction or

manner that is conducive to the surgical procedure. For example, this removal may be from the top, side or any other direction or motion. Once the inserter is removed, the implant may take on the free-state or implanted-state configuration. The engaging features of the inserter and or implant may also be used to remove or revise the implant should such a need arise. While the implant is in its implanted position, the inserter may be re-engaged to the implant. The inserter device may engage the implant in such a way that it maintains the implant in a first configuration. The inserter may be removed from the implant. The implant may have at least a second configuration after the inserter is removed, which is different than the first configuration either via material properties or deformation to a final shape. The inserter may have a feature or features that allow use of drills, screws, drivers, depth gages, etc. while the inserter is still attached to the implant. The inserter may have a feature or features that allow for preparation of the bone for the implant while the implant may be attached to the inserter. The inserter may have features and/or mechanisms that allow manipulation of the implant to achieve at least a second configuration. The inserter may also have members or features that engage some aspect of the implant for maintaining a first configuration. The members may be stationary, non-stationary or movable (retractable, etc.). The inserter may be attached to the implant in such a way that it does not interfere with the final placement or seating of the implant. For example, the inserter may not be attached in such a way that it will inhibit the final positioning or placement of the implant on or into the bone. For example, the inserter may be "top loading" or able to be removed in a direction away from the bone. The inserter may allow for a change in the relative position of for example the fastening member(s) or leg or legs to the bridge member to achieve a desired affect such as compression. This relative change or changes in position may not interfere with the final seating of the bridge member or legs on or into the bone.

The inserter may be a one piece construct, two piece construct, etc. or an assembly. The construct may separate into multiple pieces to facilitate attachment to or removal from the implant. The implant and inserter may be assembled to each other by the manufacturer or may be assembled at the time of use.

The implant may have multiple configurations, for example one for inserting into the bone and at least a second configuration for compressing, distracting, controlling spatial orientation or the like of one or more bone segments. The implant may have one or more bridge members. The implant may have leg members for engaging the bone. The implant may have modular members for engaging bone, such as bone screws or pegs. To those skilled in the art, it will be evident that multiple options exist for connecting an implant to bone. The connecting members or features may not necessarily be of the same material as the bridge component. The deformability aspect of the current invention may be in the bridge member(s), the connecting member(s) or another member(s) of the implant or fixation device. The material

properties of the current invention may be appropriate for allowing manipulation other than shape memory of the implant features to generate the desired outcome or final configuration of the implant. The leg member(s) may be configured to receive members from the inserter to hold the implant in its first configuration or to allow manipulation of the implant to another configuration. The first configuration may hold the implant in such a way to facilitate final seating of the implant in its final position against the bone. The inserter/implant assembly may be such that there is no interference of the inserter features between the implant and the bone. The inserter may be removed, allowing the implant to take on a second or third or additional configuration. The inserter may be used to manipulate the implant into a second or third or additional configuration.

The summary of the current invention discusses the merits of the current invention in terms of an implantable device. The merits of the current invention may also apply to an embodiment of the invention in an external or non-implantable embodiment. The use of the current invention is not limited to just implantable embodiments.

Brief Description of the Drawings

Figure 1a is a perspective view of a first embodiment of the current invention depicting a multiple component inserter attached to a modular implant or fixation device.

Figure 1b is a frontal view of the first embodiment shown in figure 1a.

Figure 1c is a top view of the first embodiment showing a section line A-A.

Figure 1d is the section view A-A shown is figure 1c

Figure 1e is the section view A-A but with bone screws inserted as a means of fixating the implant to the bone.

Figure 2a is a perspective view of the first embodiment of the current invention depicting a multiple component inserter attached to a modular implant or fixation device.

Figure 2b is a cross a front view of the first embodiment shown in figure 2a.

Figure 2c is a top view of figure 2b showing a section line B-B.

Figure 2d is the section view B-B shown in figure 2c.

Figure 3 is a perspective view of the implant of the first embodiment in a second configuration with bone screws assembled.

Figure 4 is a perspective view of the first embodiment of figure 1 on a bone

Figure 5 is a perspective view of the first embodiment of figure 1 on a bone and showing preparation of the bone with a drill bit.

Figure 6 is a perspective view of the first embodiment of figure 1 on a bone and showing preparation of the bone with a drill bit.

Figure 7 is a perspective view of the first embodiment of figure 1 on a bone after the final placement of the implant has been completed.

Figure 8 is a perspective view of the first embodiment of figure 1 on a bone after the final placement of the implant has been completed.

Figure 9 is a perspective view of the implant of the first embodiment of figure 1 on the bone after the final placement of the implant has been completed.

Figure 10a is a perspective view of the first embodiment of figure 1 not shown on a bone showing the use of a drill.

Figure 10b is a perspective view of the first embodiment showing the drill abutted against the drill guide.

Figure 10c is a front view of the first embodiment of figure 1 not shown on a bone showing a drill abutted against the drill guide.

Figure 11 is a perspective view of second embodiment of an implant or fixation device shown in a first configuration with parallel leg members.

Figure 12 is a perspective view of the second implant embodiment of figure 11 shown in a second configuration with the legs converging.

Figure 13 is a perspective view of a second embodiment of an inserter.

Figure 14 is a perspective view of a second embodiment of an implant or fixation device shown in a first configuration with parallel leg members on the inserter of figure 13.

Figure 15a is a front view of a third embodiment of an implant or fixation device in a first configuration.

Figure 15b is a front view of the third implant embodiment in figure 15a in a second configuration.

Figure 16a is a perspective view of the third implant embodiment in figure 15a.

Figure 16b is a perspective view of the third implant embodiment in figure 15b.

Figure 17a is a front view of the third embodiment of an implant assembled to the third embodiment of the inserter.

Figure 17b is a front view of the third embodiment of the implant at the end of engagement to the third embodiment of the inserter.

Figure 17c is a front view of the third embodiment of the implant separated from the third embodiment of the inserter.

Figure 18a is a perspective view of figure 17a

Figure 18b is a perspective view of figure 17b

Figure 18c is a perspective view of figure 17c

Figure 19 is a perspective view of a fourth embodiment of the current invention depicting an implant preassembled to an inserter with retractable engagement pins.

Figure 20 is a close up view of the working tip of the fourth embodiment depicted in figure 19

Figure 21 is a perspective view of a fifth embodiment of an implant in an alternate configuration with the legs or fixation members out of plane relative to each other.

Figure 22 is another perspective view of the implant in figure 21 showing an alternate configuration with the legs or fixation members out of plane relative to each other.

Figure 23a is a front view of an implant of a sixth embodiment assembled to an implant carrier.

Figure 23b is a side view of the implant and implant carrier of figure 23a.

Figure 24 is an isometric view of the sixth embodiment of the implant and implant carrier assembly shown in figure 23a and 23b.

Figure 25 is a front view of the implant carrier of the sixth embodiment shown in figure 24 without the implant assembled to it.

Figure 26a is an isometricview showing the inserter and an implant/carrier assembly of the sixth embodiment prior to installing the carrier to the inserter.

Figure 26b is an isometric view of the sixth embodiment shown in figure 26a further showing the implant/carrier assembled to the inserter.

Figure 27a is an isometric view showing the sixth embodiment of figure 26 prior to releasing the implant from the inserter and carrier.

Figure 27b is an isometric view showing the sixth embodiment of figure 26 after releasing the implant from the carrier, further showing the implant released from the carrier and the carrier still engaged with the inserter

Figure 28 shows the sixth embodiment further depicting the implant, assembled to the inserter via the carrier, being fully seated on the bone, further showing that the inserter and carrier do not interfere with the placement of the implant in its final position.

Figure 29 is a close-up view of the implant/inserter interface of a seventh embodiment depicting an implant assembled to the inserter further showing the inserter engaging the periphery of the implant thereby not interfering with the final seating of the implant.

Figure 30 shows the seventh embodiment of figure 29 depicting the inserter being released from the implant by rotating the inserter off the implant.

Figure 31 shows an eighth embodiment of the current invention with engaging members extending through an implant for provisional fixation on the bone surface.

Detailed Description of the Invention

The present invention may include a fastening device and an inserter. Exemplary embodiments of the fastening device and inserter are shown in figures 1, 14 and 19. The fastening device may be of a configuration similar to a modular staple or bone plate as shown in figure 3. The fastening device may also have a configuration resembling a bone staple as shown in figures 11, 12, 15 and 16. The present invention may have the inserter pre-assembled or affixed to the implant as shown in figures 1 and 14. The implant or implants may not be pre-assembled to the inserter. The implant or implants could be held in a particular configuration in the packaging that facilitates engagement with the inserter. Figures 11 and 12 depict an embodiment of the fastening device or implant that shows one possible combination of implant configurations. Figure 11 and 14 show this embodiment maintained in a first configuration for insertion. Figure 12 shows this embodiment in its free-state or implanted-state configuration.

The embodiments described herein may be used in connection with any type of inserter or fixation device, including but not limited to various bone staples, bone plates, etc. that have more than one implant configuration where the insertion device does not interfere with the final placement of the implant.

As shown in figure 1a, 1b, 1d and 1e, the inserter 100 is assembled to the implant 120. The implant 120 is shown in a first configuration that may or may be flat. The inserter 100 may or may not have features that allow preparation of the bone for receiving other members of the implant. In this embodiment, the inserter 100 has two tube members 102a and 102b that allow the bone to be prepared through the internal diameters 106. The tube members 102a and 102b also serve as drill guides. Implant 120 is temporarily connected to the tubes 102a and 102b by the engagement pins 104a and 104b. The two independent tubes 102a and 102b are individually connected to the implant 120 by the engagement pins 104a and 104b. The engagement pins may or may not extend completely through the implant. The engagement pins could also be temporarily or permanently attached to the implant as opposed to being part of the inserter assembly. The engagement pins may extend through the implant with features that engage the bone for provisional fixation during the procedure. Also, this embodiment shows the use of circular pins, however, to those skilled in the art the use of other attachment means will be obvious and may or may not be separate pieces from the tube members. The means of attaching the plate to the inserter is shown on the bridge area of the plate, but could occur anywhere on or around the periphery of the plate. The two independent tubes are held in relative position to each other by clip 110. Clip 110 has a means for holding during insertion or removal, tab member 114, and two engagement pins 112. The engagement pins 112 engage the tubes 102a and 102b to hold them in relative position to each other thereby maintaining the implant 120 in its first configuration. Figure 1e depicts the inserter with the bone screws

130 inserted into the implant 120 while the implant is maintained in its first configuration. Figures 1c and 1d show an engagement 119 where the engagement pins 104a and 104b controllably interface with the engagement holes 122 shown in figure 3. Implant 120 is shown in a first configuration in figures 1a, 1b, 1d and 1e. Alternatively, the inserter 100 may be used for implant manipulation or for holding the implant in a first configuration with or without a means for preparing for other implant members, e.g. bone screws. The bone preparation may or may not be distinct from the inserter. Bone preparation may be done in the implant first configuration and/or in a second configuration.

Figure 2a, 2b, 2c and 2d depict the inserter 100 without the clip 110. The inserter assembly 100 is shown in a manner depicting an initial release step that may or may not allow the implant 120 to have a second configuration. In this embodiment, the bone screws 130 have been prepared and placed into the implant 120. The inserter tubes 102a and 102b are still engaged in the implant 120 via the engagement pins 104a and 104b. The implant 120 is shown in a second configuration and is achieved either by the intrinsic mechanical properties of the material or secondary mechanical manipulation of one or more areas of the plate. Figure 2a, 2b, 2c and 2d show the inserter temporarily attached to the implant after preparation of the bone and placement of the bone screws 130. The inserter 100 is shown just prior to removal of the inserter 100 from the implant 120. The independent inserter tubes 102a and 102b accommodate the second configuration of the implant 120.

Figure 3 depicts the implant 120 in its second configuration after removal of the inserter 100 or possibly after secondary mechanical manipulation/deformation. The bone screws 130 may be prepared and positioned through the internal diameter 106 while the inserter 100 was still attached to the implant 120. Figure 3 shows one embodiment of the engagement hole 122 that accepts the engagement pins 104a and 104b of the inserter tube 102a and 102b.

Figure 4 depicts one embodiment of the inserter 100 assembled to implant 120 on a foot 140. Figure 5 and 6 depict one embodiment of the inserter 100 assembled to implant 120 on a foot 140 further showing preparation of the bone 140 with drill 150 through the internal diameter 106 to accept bone screws or other fixation features of the implant 120. In figures 4, 5 and 6, clip 110 maintains the tubes 102a and 102b in a relative position to each other. Clip 110 may or may not be a separate assembly; the functionality could be achieved via an integral feature, molded-in for example, to the tube(s). Clip 110 is shown to provide a rigid, static connection between the tubes 102a and 102b. The connection mechanism between the tubes 102a and 102b may also have a dynamic, moveable connection (e.g. application of springs) so that the tubes will allow the plate to conform in some way to the bone prior to complete removable of clip 110. The tubes 102a and 102b are controllably engaged in implant 120 via engagement pins 104a and 104b and engagement features122. In this embodiment, the clip 110, the tubes 102a

and 102b, engagement pins 104a and 104b and engagement holes 122 act together to maintain the implant 120 in a first configuration. In alternate embodiments more components or fewer may be needed to maintain the implant in a first configuration.

Figure 7 depicts one embodiment of the inserter 100 assembled to implant 120 on a foot 140. This figure depicts the first removal step for this particular embodiment of the inserter 100. In figure 7 the bone has been prepared accordingly and the implant 120 is in its final position on the bone and its first configuration. Figure 7 shows removal of clip 110 from inserter 100. As further shown in figure 8, removal of the clip 110 from the inserter 100 after completing the appropriate bone preparation allows the implant 120 to adapt to a second configuration while the implant 120 is in its final implant position. Bone screws 130 (not shown in figure 7 or 8) may or may not have been prepared and positioned while the inserter assembly 100 was engaged to the implant 120. Figure 9 shows implant 120 on bone 140 after removal of the inserter assembly 100 after the implant 120 is in its final position either before or after the implant achieves its second configuration.

Figure 10a depicts an exemplary embodiment of the inserter assembly 100 and implant 120 while also showing preparation steps with drill 150 lined up with the internal diameter 106 of the tubes 102a and/or 102b. Figure 10a, 10b and 10c further show implant 120 controllably engaged to the tubes 102a and 102b with engagement pins 104a and 104b (pins not shown in image) engaged in engagement holes 122. Clip 110 is controllably maintaining the tubes relative to each other with the engagement pins 112 engaged in the tubes 102a and 102b. Drill 150 has a fluted region 152, a shaft 154 and a stop 156. Figure 10b and figure 10c show the drill stop 156 abutted against the top surface of the drill tube 102a or 102b. The stop 156 may be used to prevent the drill from extending too far into the bone during preparation. The stop 156 may be used to control the drill depth so the fluted region 152 only protrudes through the drill guide/tubes 102a and/or 102b to a predetermined depth.

In this exemplary embodiment the implant 120 may be made of a material that may have elastic or spring properties that allow the implant to have more than one configuration. Figure 3 shows the implant 120 in a possible free-state or implanted-state of the device. The free-state or implanted-state may provide compression (or distraction) across bone members. Figure 3 shows the implant 120 having a thickness 126 and a bridge member 124. It further shows the implant 120 having an arc or radius 128 while in its second configuration. Figure 3 also shows an example of a bone attachment device 130, which in this case resembles a bone screw. The attachment device 130 is rigidly attached to the implant 120 through the attachment feature 129. The attachment feature 129 is such that it allows the bone attachment device to be locked to the material that may have elastic properties. The bridge member 124 depicted in figure 3 also has an engagement feature 122 for controllably engaging

the inserter for maintaining the first configuration. The embodiment depicted thus far allows the implant 120 to be fully seated to the bone in its final position without the inserter interfering with this final position. When the implant is placed in its final position, it may or may not be in its second configuration. The implant may remain in a first configuration until the inserter is removed or further manipulation is performed.

Figure 11 shows an exemplary embodiment of an implant 200 that resembles a bone staple. The implant is shown in a first configuration where the legs 220 are relatively parallel to each other. This first configuration may be useful in facilitating implantation of the implant 200 into bone. The first configuration may be the configuration that is maintained by an inserter. Figure 11 depicts implant 200 having a bridge member 210 with a thickness 202. Thickness 202 may or may not be more or less than thickness 204. This particular embodiment shows the bridge member 210 have a radius 206. Radius 206 may or may not be present. Figure 11 further shows legs 220 having a feature 230 for engaging an inserter. The engaging feature 230 may be an internal feature, external feature, may be positioned on the interior or exterior of the legs 230. It is also reasonable to have an engagement feature similar to engaging holes 122 in this type of device. Figure 12 shows the implant 200 of figure 11 in a second configuration. In this particular configuration of figure 12, the legs 220 converge towards each other. Either one or multiple legs may move to create this convergence or distraction. The second configuration may be the free-state or implanted-state.

Figure 13 shows another embodiment of an inserter 240. Inserter 240 has a holding piece 242 and at least one engaging pin 244. The engaging pins 244 are spaced and oriented appropriately to interact with an implant to maintain a first configuration. Figure 14 shows the inserter 240 assembled to an implant 200. The engaging pins 244 of inserter 240 engage the internal diameter 230 of implant 200 to maintain the implant 200 in a first configuration. When the inserter 240 is removed the implant assumes a second configuration as shown in figure 12.

Figure 15a shows yet another embodiment of an implant or fixation device 300. The implant 300 has a bridge member 310 and leg members 325. The bridge member 310 has a thickness 315 that may or may not be the same as the leg thickness 320. Figure 15a shows the implant in a first configuration. Figure 15b shows the implant 300 in a second configuration. The implant of figure 15a and 15b is also shown in figure 16a and 16b depicting an internal diameter 330. Opening 340 is generated by the internal diameter 330 breaking out into the inside of the leg. The opening 340 may or may not be needed for this current invention. The internal diameter 330 may be used to engage the inserter and maintain the implant in a particular configuration. The internal diameter 330 may also be used to manipulate the implant into another configuration whereas the relationship between the implant legs 325 is changed by creating convergence, divergence or some other out of plane relationship.

Alternate embodiments may include an inserter and implant that work in conjunction to create a first and second configuration.

Figure 17a shows an embodiment of an implant 300 on an inserter 400 with the implant being in a first configuration. Figure 17b shows the same embodiment with the implant 300 at the end of the engagement pins 410 of the inserter 400. The implant in figure 17b is transitioning to a second configuration. Figure 17c shows the implant 300 fully disengaged from the inserter 400. The implant 300 is in a second configuration. Figures 18a, 18b and 18c depict the embodiments in figures 17a, 17b and 17c in a perspective view.

The embodiments shown herein depict the engagement between the implant and inserter as using pins. Those skilled in the art will appreciate that various means may be used to attach the implant to the inserter.

Figures 19 and 20 depict an embodiment of an inserter 500 that is preassembled to an implant 300. The inserter 500 has a holding means 510 and an impact or seating means 530. Handle 520 is slide-ably engaged in the body 505. The assembly 500 has means for engaging an implant, 515. In this embodiment the engaging means are pins 515. Pins 515 are connected to handle 520 such that the pins will retract from implant 300 thereby ejecting or releasing the implant from the inserter assembly 500. In this embodiment the pins or engagement means are retractable. Those skilled in the art will appreciate that the same effect can be achieved without retractable engagement means where the implant may be pushed off the engagement means with a plunger type mechanism that may push the implant off or from the inserter assembly.

Figures 21 and 22 show an embodiment of an implant in an alternate configuration. This embodiment resembles a bone staple, but those skilled in the art will appreciated that this embodiment could also be achieved with modular fixation means such as bone screws. The implant 600 has a bridge member 610 with thickness 615. The bridge member 610 is connected to fixation members or legs 620. Legs 620 are out of plane relative to each other. Legs 620 may or may not be out of plane relative to the bridge member 610. The implant 600 may have engaging features 630 to control and/or manipulate the implant into alternate configurations. The engaging features 630 may or may not extend through the entire implant. The engaging features 630 may be positive or negative features in the implant or inserter. This alternate configuration may or may not be achieved through the inherent material properties of the implant material. The implant may achieve this alternate configuration by transitioning from, for example, configuration 1 to configuration 2 to configuration 3. Where configuration 1 may be that as attached to the inserter or delivery instrument and configuration 2 may be a configuration where the leg members 620 are in a compressed state and where configuration 3 may be a configuration where the compressed legs of configuration 2 are made to be out of

plane to each other. Alternately, the implant may achieve this alternate configuration by transitioning from, for example, configuration 1 to configuration 2. Where configuration 1 may be that as attached to the inserter or delivery instrument and configuration 2 may be a configuration where the leg members 620 are in a compressed state and are made to be out of plane to each other. This embodiment is not intended to be limiting. The transition from one configuration to another configuration may be one distinct transition or more than one distinct transition. The transition may be due to the inherent material properties or achieved by a manipulation of the material or a combination thereof.

The embodiments described herein can be manufactured from a number of different materials or combinations of materials. Nitinol, for example, possess material properties, such as shape memory and/or super elasticity that may provide the inherent properties to allow an embodiment to have multiple configurations with or without an external mechanical manipulation. Stainless steel and/or titanium also have desirable material properties for the embodiments described herein. Stainless steel and/or titanium may not possess shape memory or super elasticity, but may possess the mechanical properties for embodiments that may benefit from mechanical manipulation to achieve multiple configurations. Still other materials such as PEEK or other polymers may also possess material properties beneficial for the embodiment described herein. A combination of materials may also be preferred. For example, a nitinol plate with titanium screws may be the materials of choice for some embodiments. Those skilled in the art are aware of the typical materials and combinations of materials applicable to the current invention.

Yet another embodiment of this invention may have the implant assembled onto a holding apparatus that may be assembled to an inserter at the time of surgery, as shown in figures 23a, 23b, 24, and 25 – 28.

Figure 23a and 23b show an exemplary embodiment of an implant carrier, 700, assembled to an implant embodiment, 800. Figure 23a is a front view of the assembly and figure 23b is a side view of the assembly. Figure 24 shows the carrier, 700, slideably engaged to the implant, 800. Implant 800 has features 810 for receiving the engaging features 710 of the carrier. The carrier 700 may have features and/or geometries 720 for engaging the inserter. The carrier 700 may have features and/or geometries 730 for additionally engaging the inserter. The engaging features and or geometries 720 and 730 may be used separately or in combination to provide a poka-yoke feature that prevents incorrect assembly of the carrier to the inserter. Features 720 and or 730 may also be used to assist the inserter in removing the carrier from the implant at the time of implantation. The carrier 700 may be configured to fit multiple sized implants. The engaging features 710 of the carrier 700 may change from size to size in order to optimize the fit between the implant 800 and carrier 700. The engaging features (e.g. 720 and 730) of the

carrier may or may not change by implant size. Keeping such features consistent among varying implant sizes may allow the use of multiple implant carriers with the same inserter.

Figure 25 more clearly shows the carrier 700 without an implant assembled. As previously described the carrier 700 has features 710 for slideably or by other means attaching and securing the implant in position on the carrier. The inserter engaging feature 720 may have multiple configurations or geometries. The engaging feature 720 may provide an engagement with the inserter that allows the inserter to retract the carrier from the implant 800. Engaging feature 730 may also be used to attach to the inserter and may provide a poka-yoke feature to prevent improper assembly of the carrier 700 to an inserter. To those skilled in the art, it will be apparent that the function of features 720 and 730 may be combined or alternated to achieve the same purpose and function described in this embodiment.

Figure 26a and figure 26b show an exemplary embodiment of an inserter 900 and the implant 800 assembled to the carrier 700. Figure 26a shows the inserter 900 with the implant carrier 700 prior to assembling the carrier 700 to the inserter 900. Figure 26b shows the carrier 700 with the attached implant 800 assembled to the inserter 900. In this exemplary embodiment the inserter 900 has a base component 910, a handle component 920 and a locking means 930. The inserter also may have a retaining member 940 that may be used for assisting in maintaining the carrier 700 in a specified position. Retaining member 940 may or may not be integrated into the handle component 920. This inserter embodiment has features 950 for engaging with the carrier 700 in a poka-yoke means. The locking means 930 may be used to secure the handle component 920 to the base component 910.

Figure 27a and figure 27b show the exemplary embodiments of figure 26a and figure 26b in an upright isometric view. Figure 27a shows the carrier 700 and implant 800 attached to the inserter 900 prior to releasing the implant 800 from its carrier 700. Figure 27b demonstrates one embodiment for releasing the implant 800 from the carrier 700. Figure 27b shows the handle 920 in a retracted position that removes the carrier 700 from the implant 800. In the state shown in figure 27b the implant is now free from the carrier 700. The carrier 700 may be removed from the inserter 900 and replaced with another implant/carrier assembly.

Figure 28 demonstrates the exemplary embodiments of the inserter 900 the carrier 700 and the implant 800 allowing the implant 800 to be seated flush against a bone surface 1000. One will notice that the inserter 900 does not interfere with the final placement of the implant 800. For an implant 800 having a second configuration where the parallel legs are allowed to converge after releasing from the inserter 900 and carrier 700, not having to perform a secondary final seating of the implant after release from an inserting device is beneficial.

Figure 29 shows a close-up view of the implant/inserter interface of another exemplary embodiment of an inserter 1100 and an implant 1200. The inserter 1100 has means 1120, 1130 and 1110 for attaching to the implant. These attachment means engage the implant 1200 in such a way to not prohibit final seating of the implant 1200 in its final desired position. Figure 30 shows one possible means for releasing the implant 1200 from the inserter 1100. This embodiment demonstrates a rotation of the inserter 1100 relative to the implant 1200. This rotation releasing the engaging means 1120 and 1130 while rotating about the pin 1110. Once fully rotated and released the inserter 1100 can be removed from implant 1200.

Figure 31 shows the previously described inserter embodiment 100 and 110 assembled to implant 120. It further shows an embodiment of the engaging means 190 that may purposely extend beyond the implant 120. The engaging means 190 shown may have tips that are configured to penetrate into a bone surface to provide provisional fixation.

The exemplary embodiments described herein are not intended to be limiting. To those skilled in the art the benefits of the invention are apparent. Furthermore those skilled in the art will appreciate that the intent of this invention may be realized in other embodiments not necessarily described herein.

Claims

1. What is claimed is an implant having at least two configurations and having a means for bone fixation and a means for attaching to a delivery instrument, such that the means of bone attachment includes at least two bone fixation members which may be integral to the implant or affixed to the implant where the means of attachment to the delivery instrument is substantially within the envelope of the outer most perimeter of said implant thereby not impeding the final placement of the implant onto a bone, where the delivery instrument maintains the implant in a first configuration different than a second configuration with a means for attaching to said implant, such that said means of attachment remains substantially within the envelope of the outer perimeter of said implant.

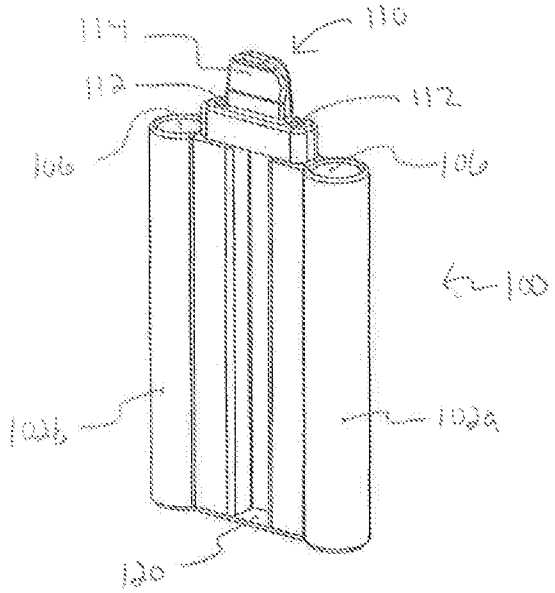

Figure 1a

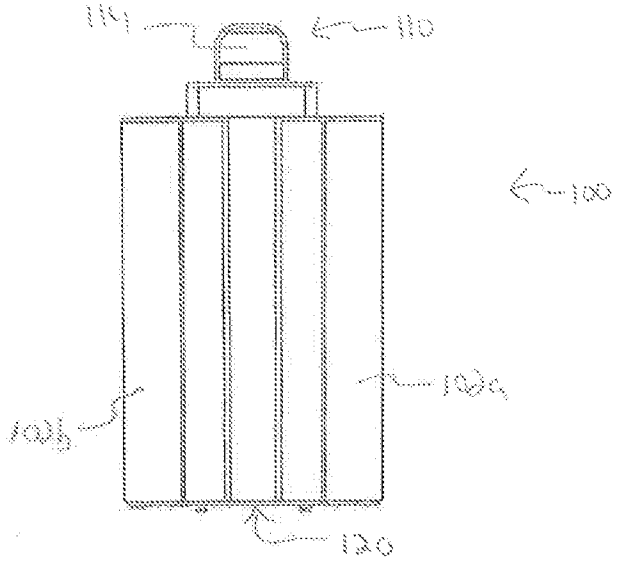

Figure 1b

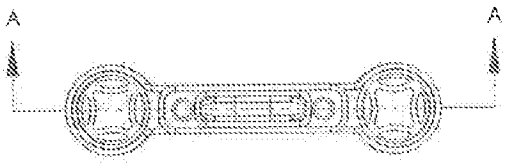

Figure 1c

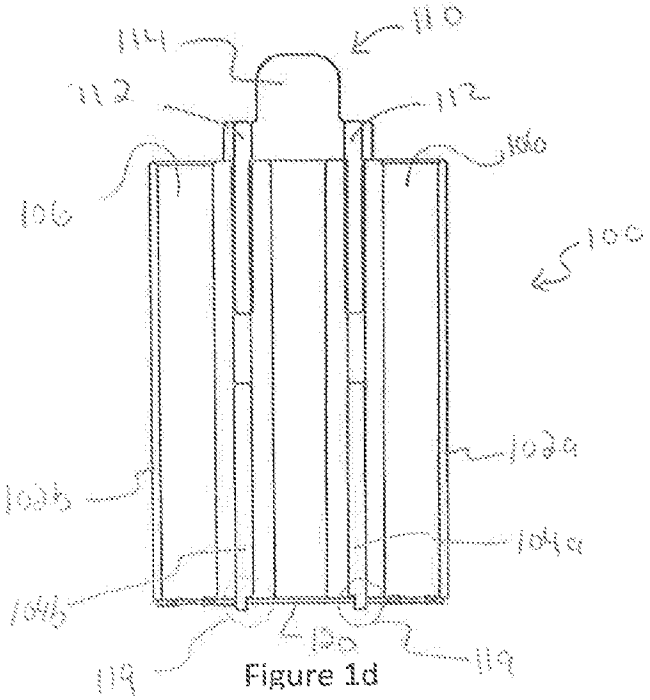

Figure 1d

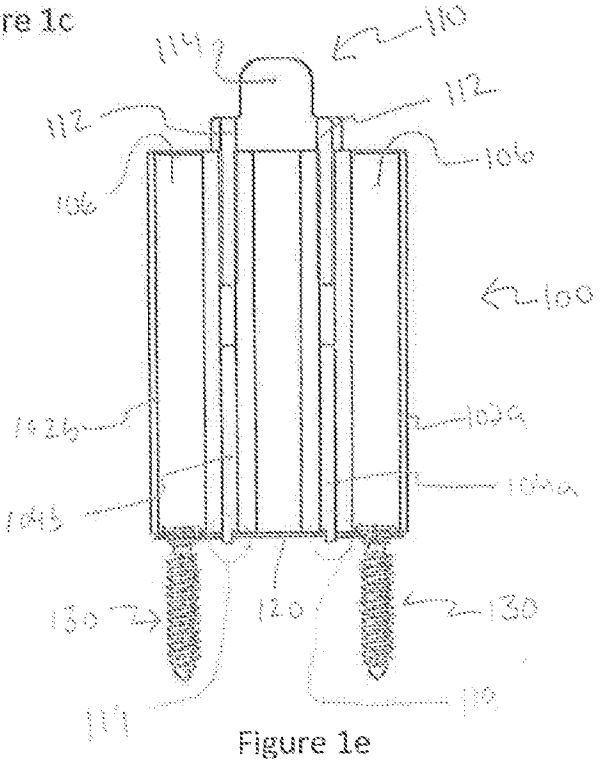

Figure 1e

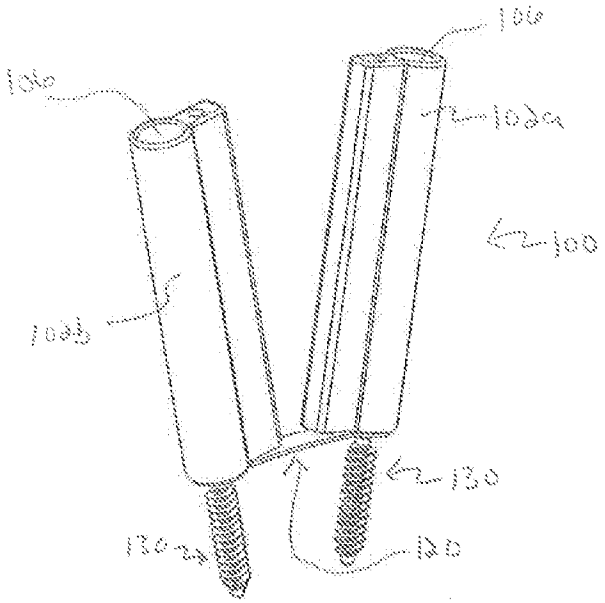

Figure 2a

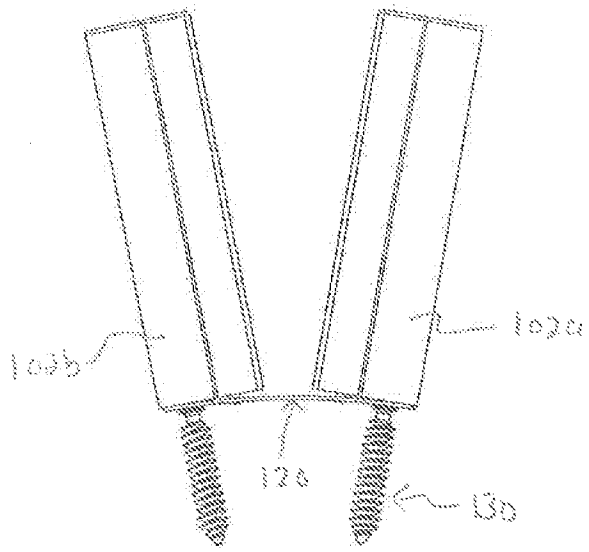

Figure 2b

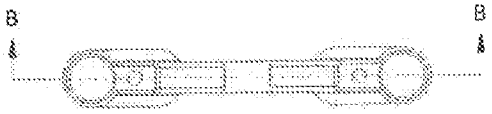

Figure 2c

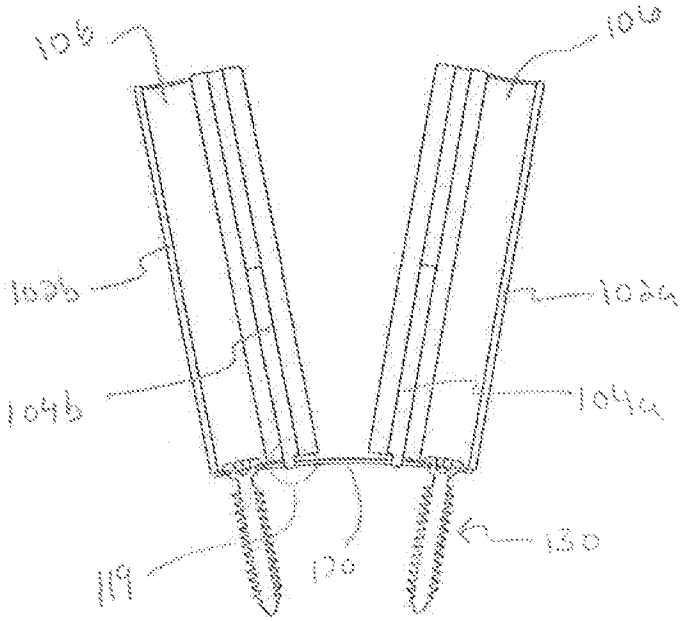

Figure 2d

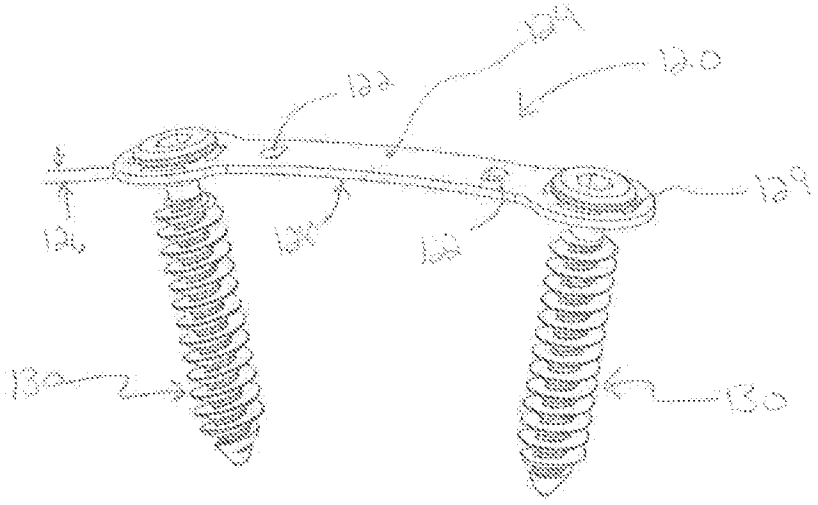

Figure 3

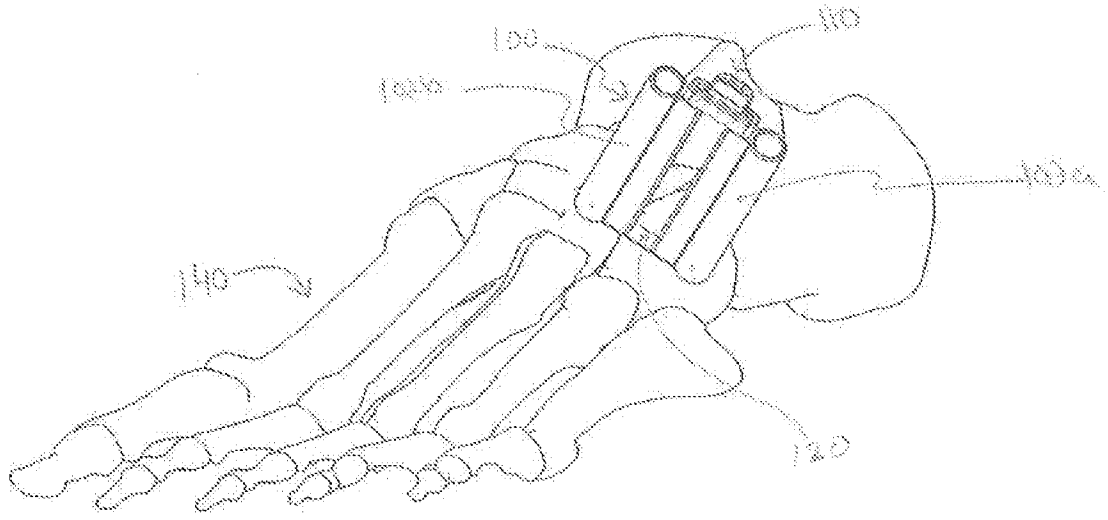

Figure 4

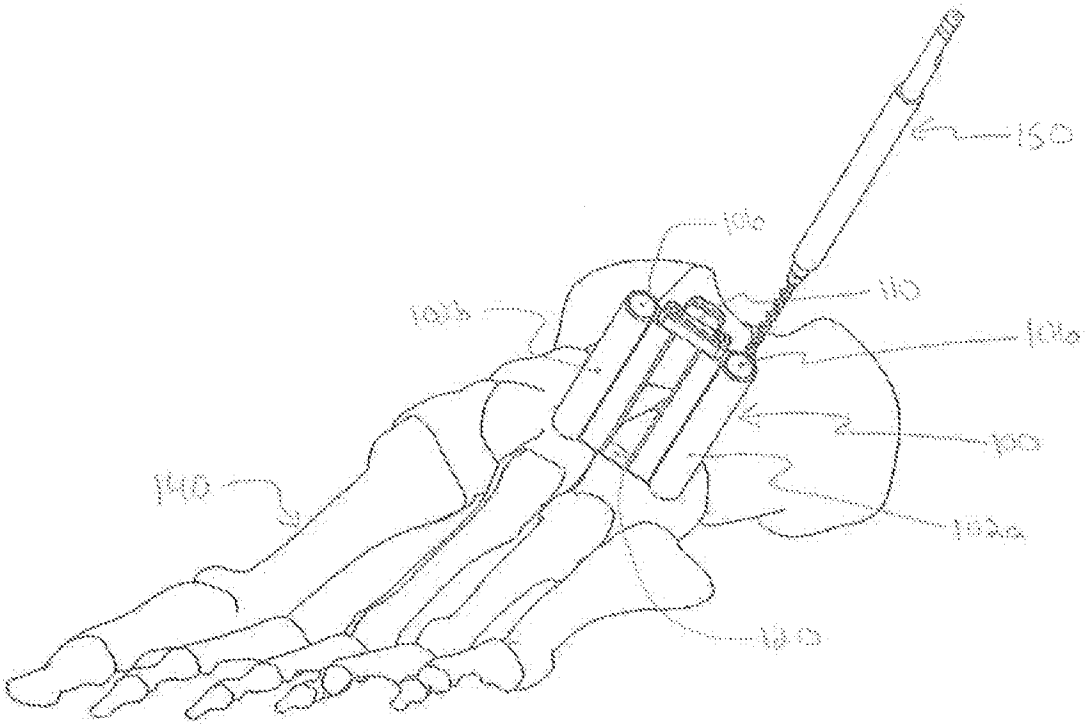

Figure 5

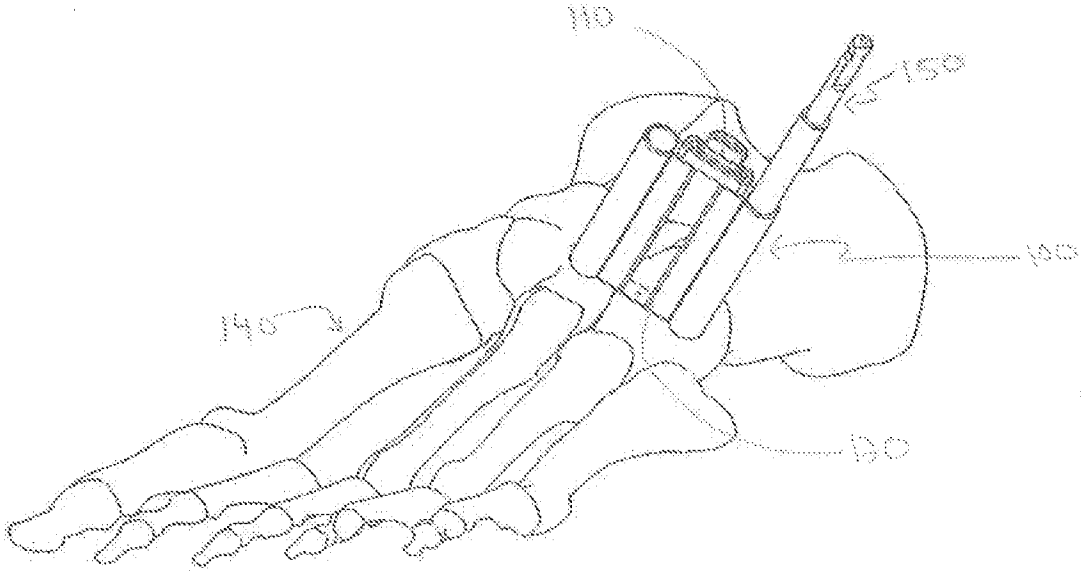

Figure 6

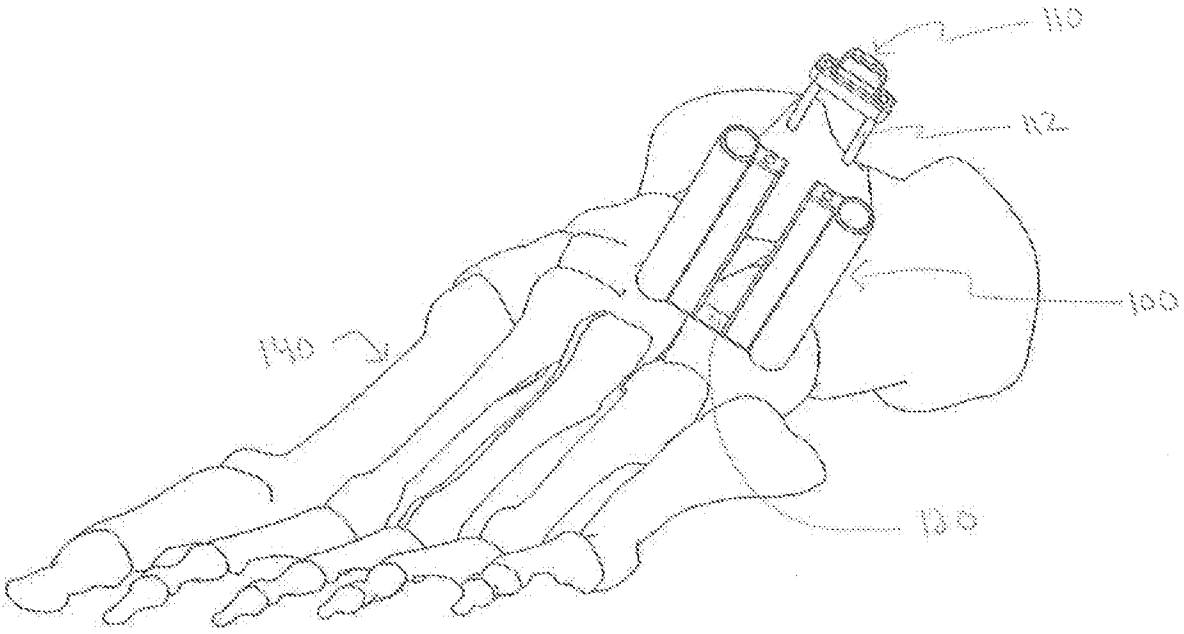

Figure 7

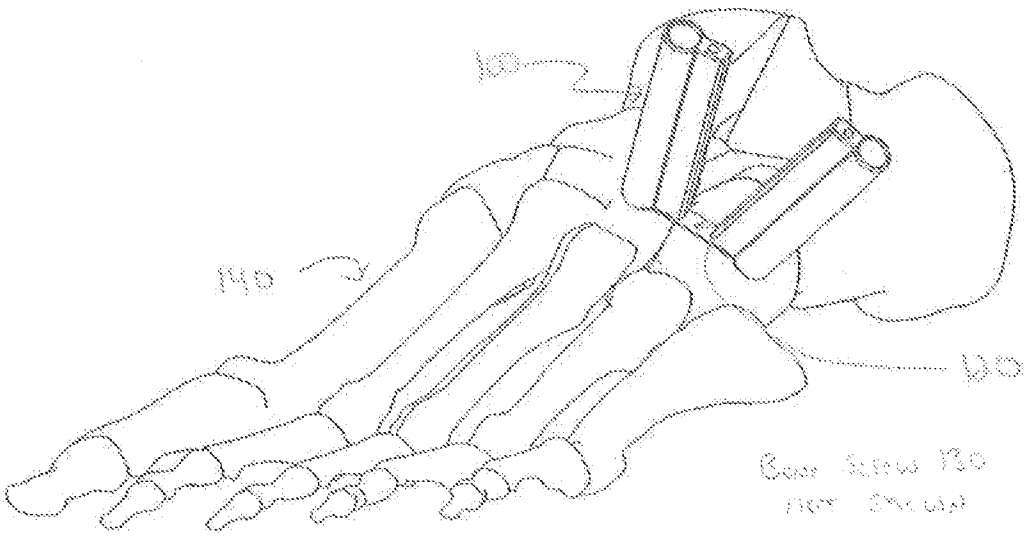

Figure 8

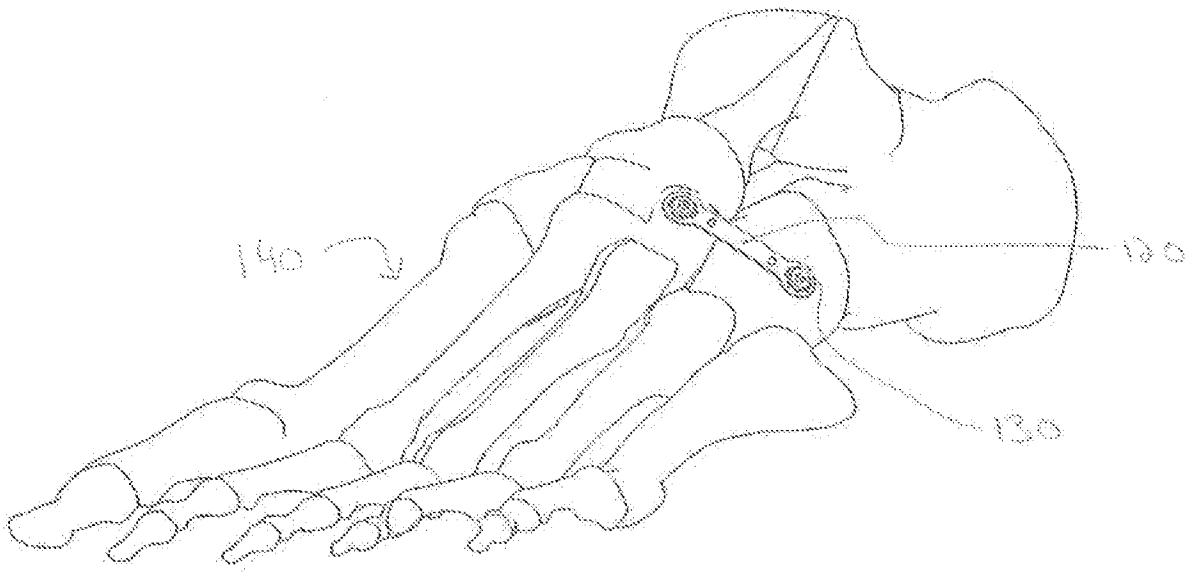

Figure 9

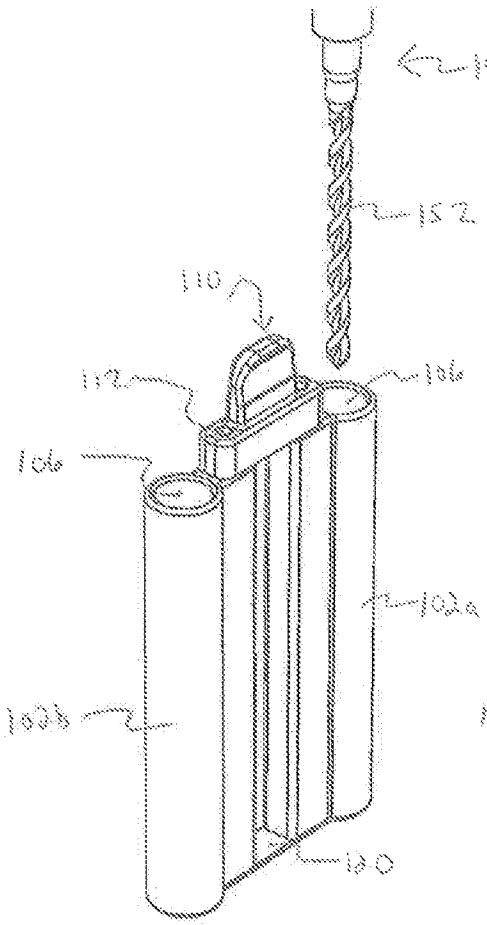

Figure 10a

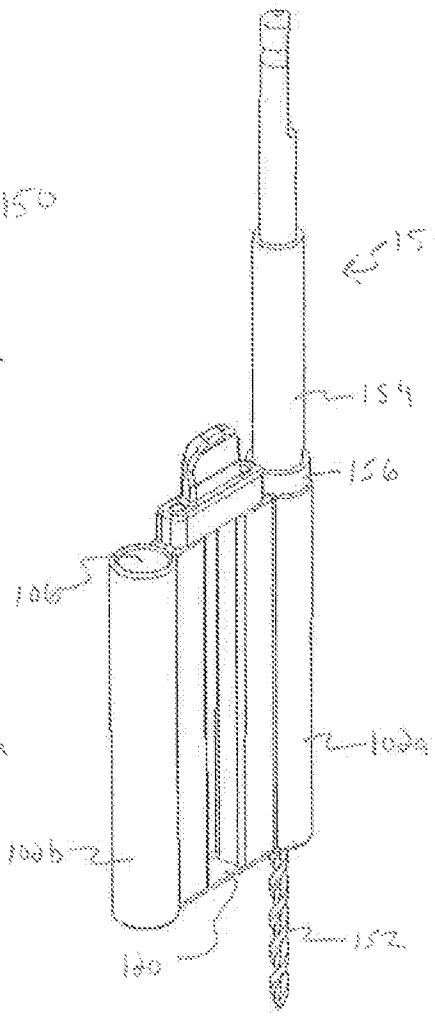

Figure 10b

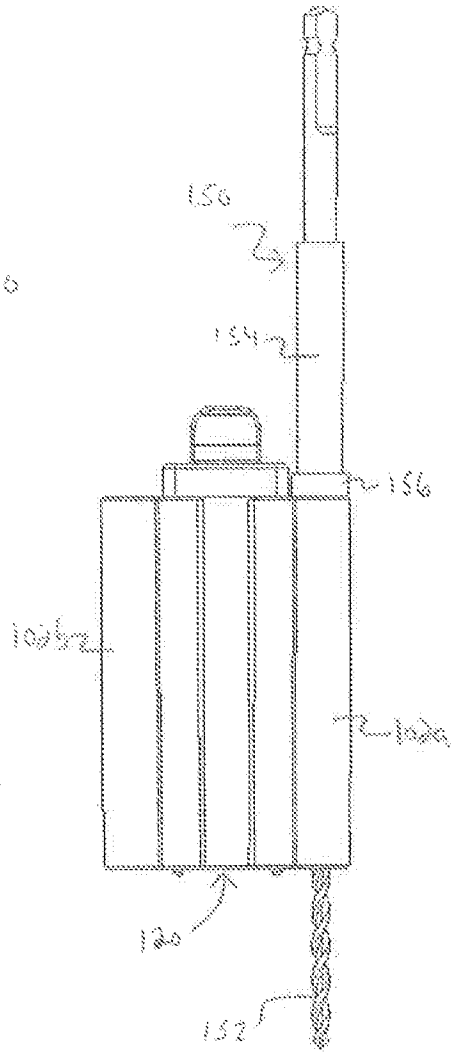

Figure 10c

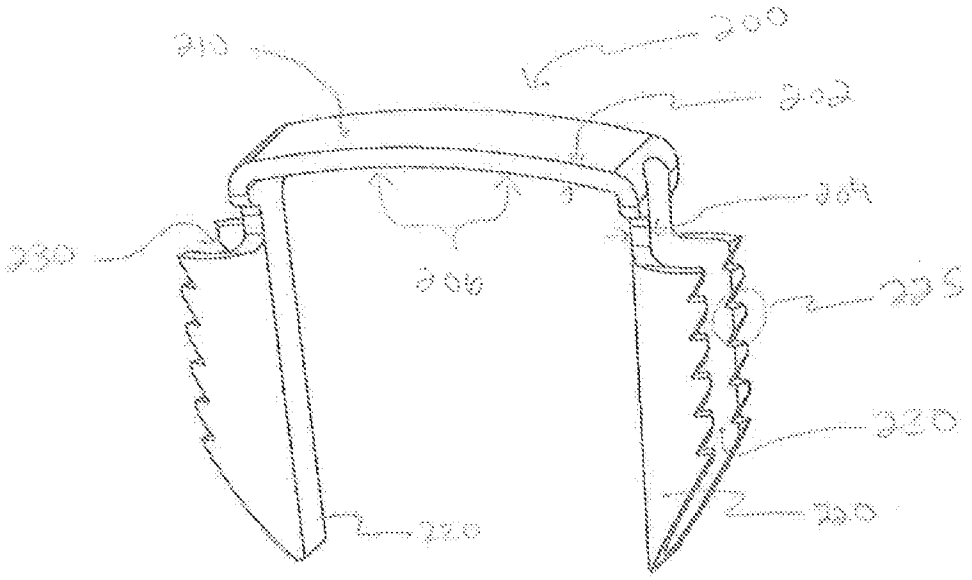

Figure 11

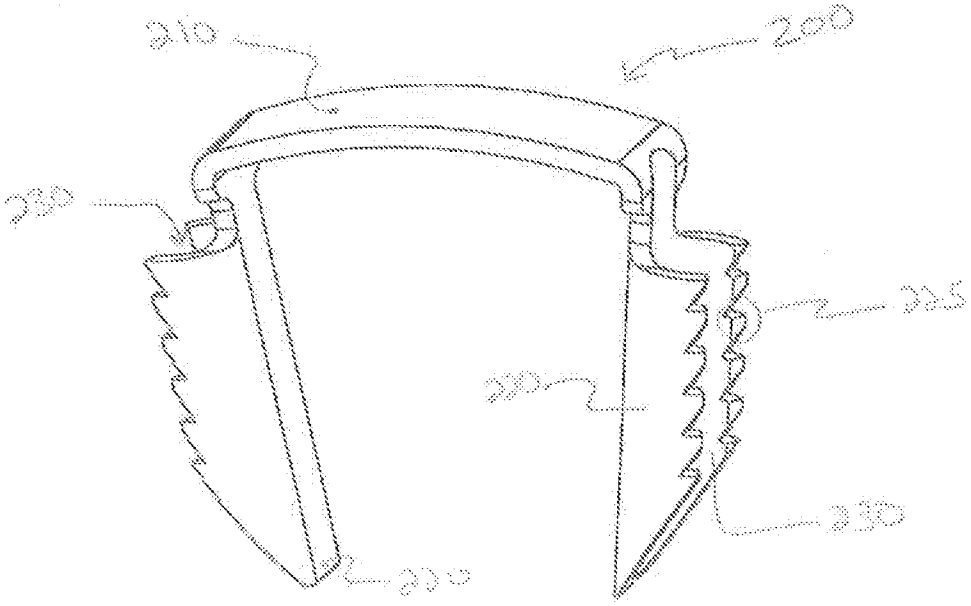

Figure 12

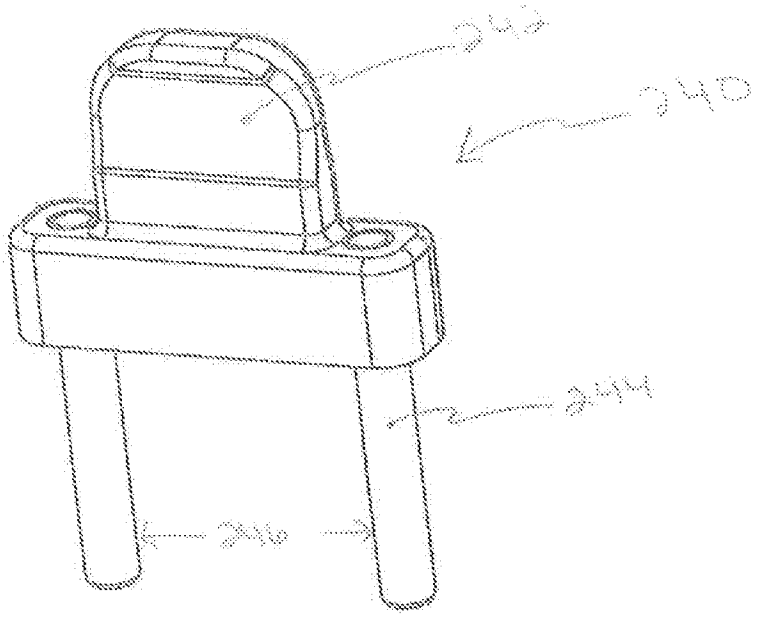

Figure 13

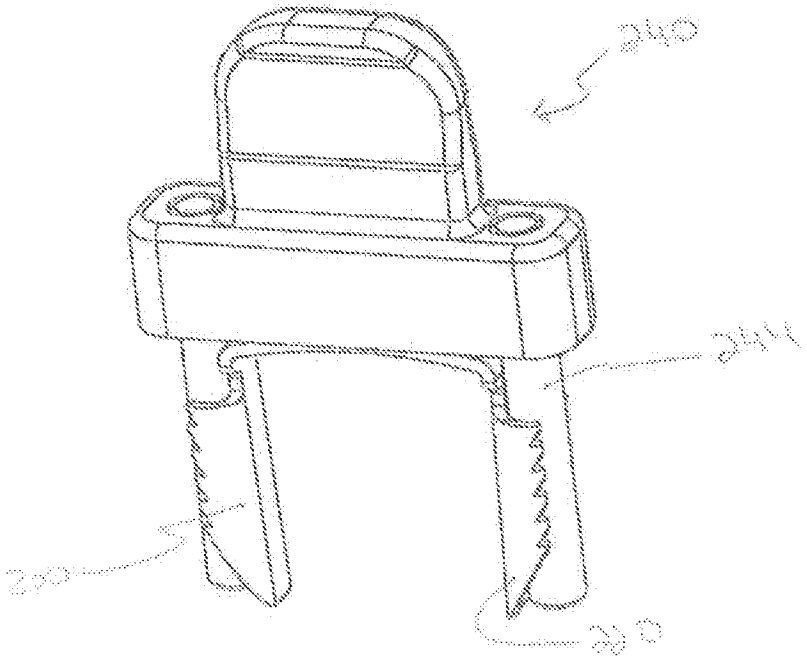

Figure 14

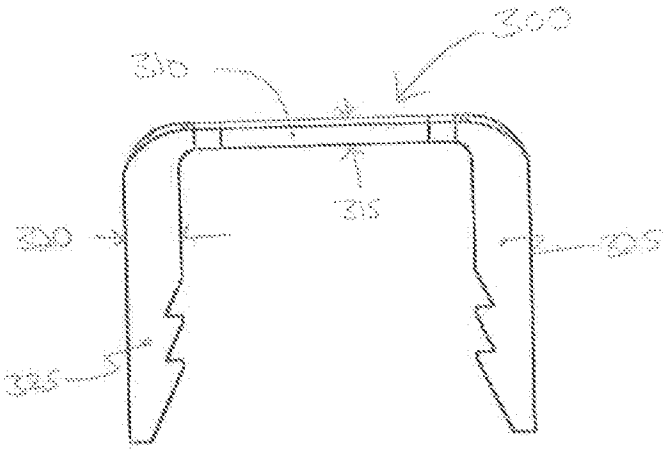

Figure 15a

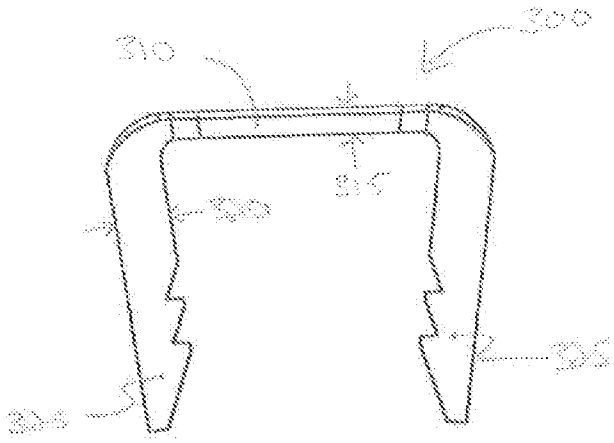

Figure 15b

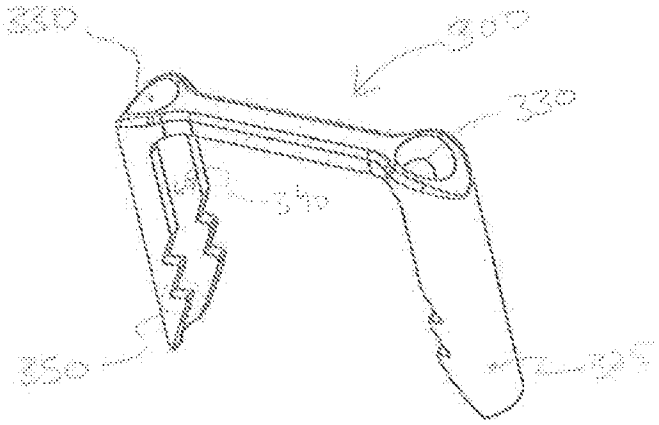

Figure 16a

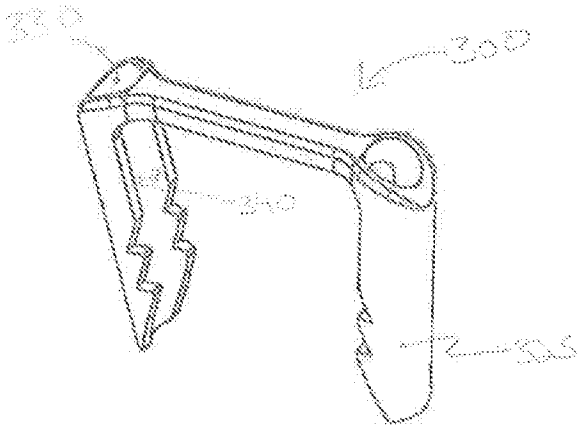

Figure 16b

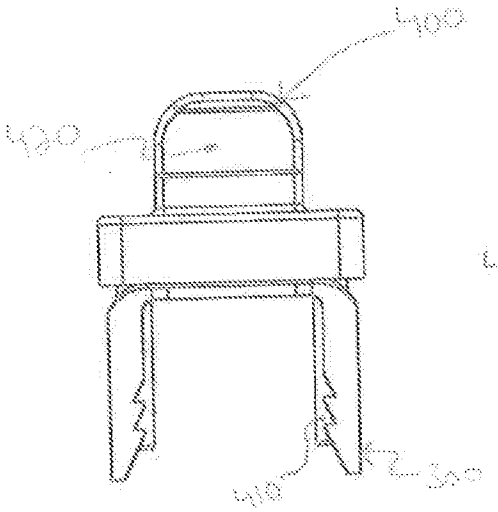

Figure 17a

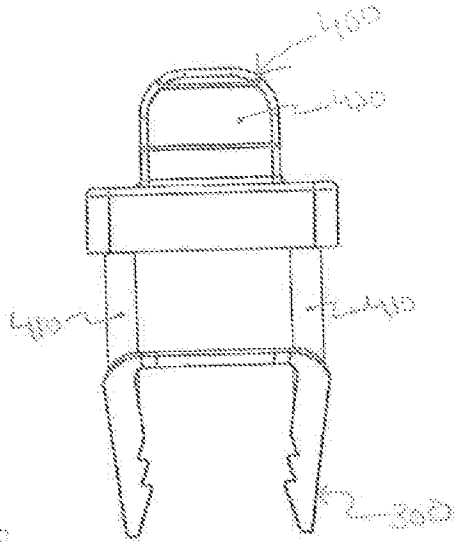

Figure 17b

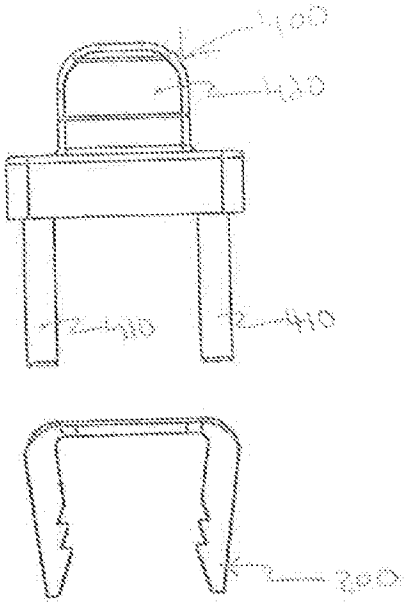

Figure 17c

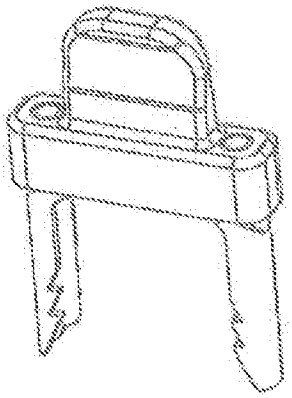

Figure 18a

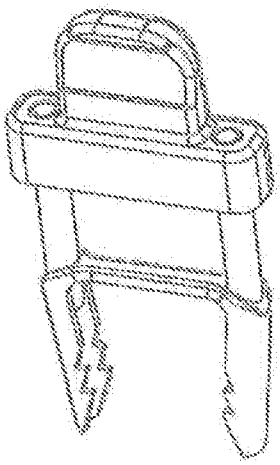

Figure 18b

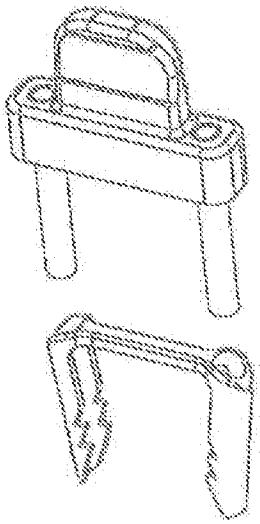

Figure 18c

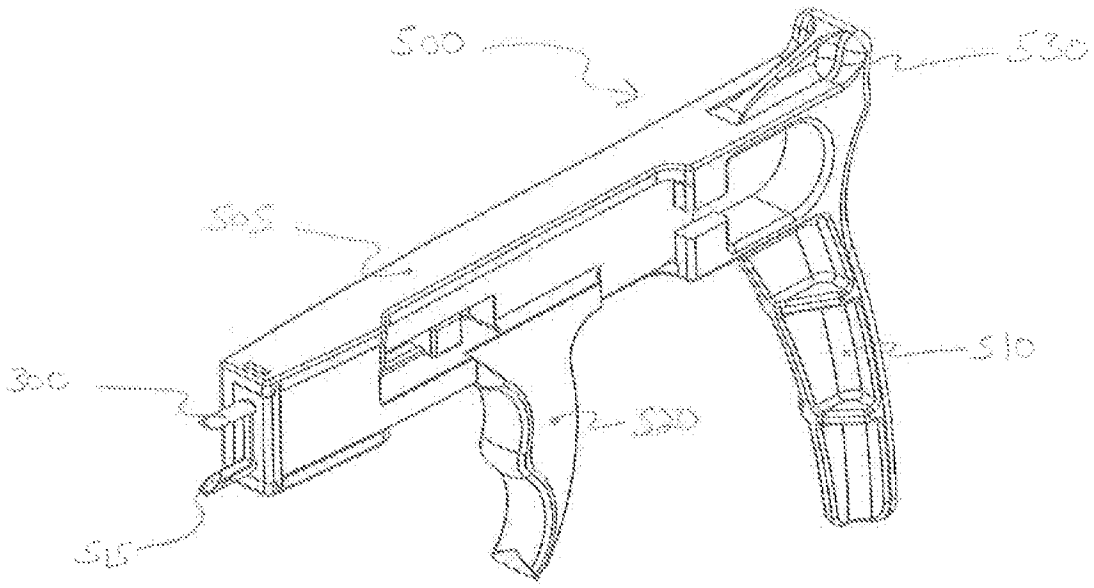

Figure 19

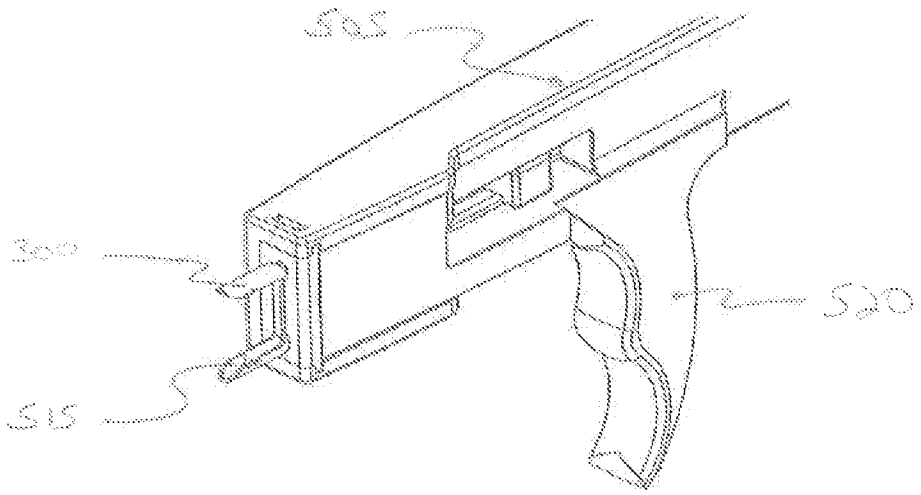

Figure 20

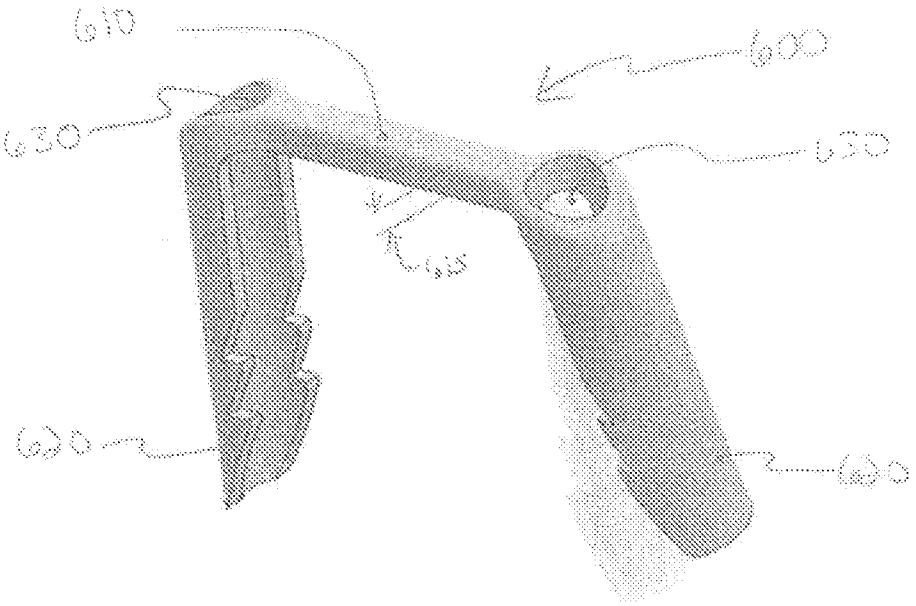

Figure 21

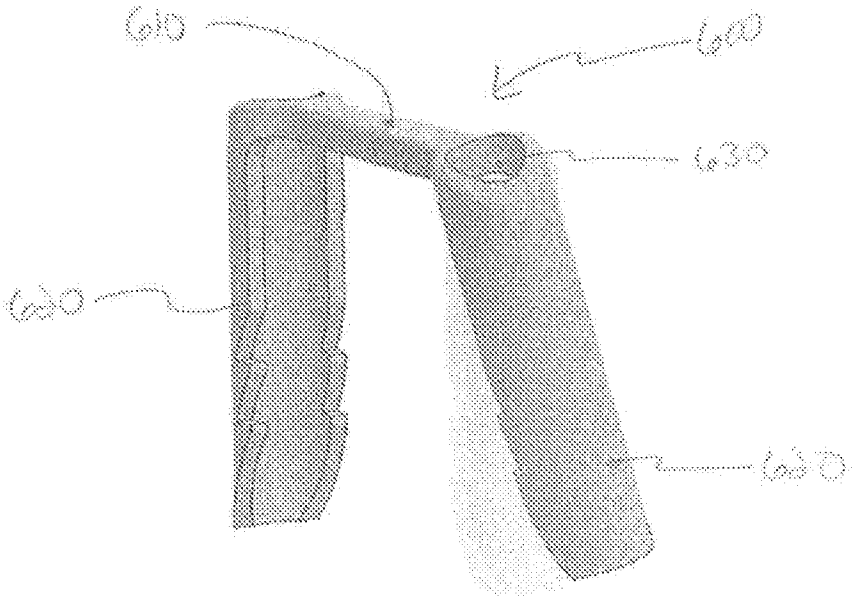

Figure 22

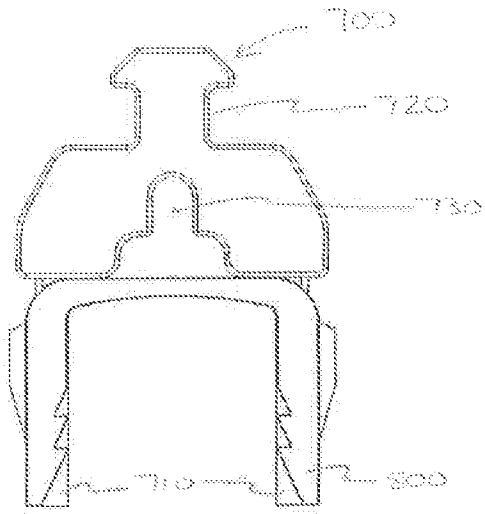

Figure 23a

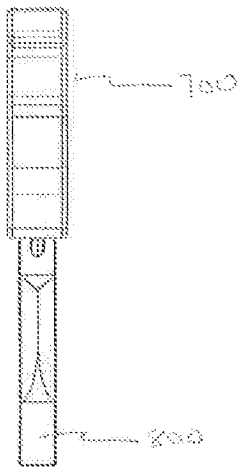

Figure 23b

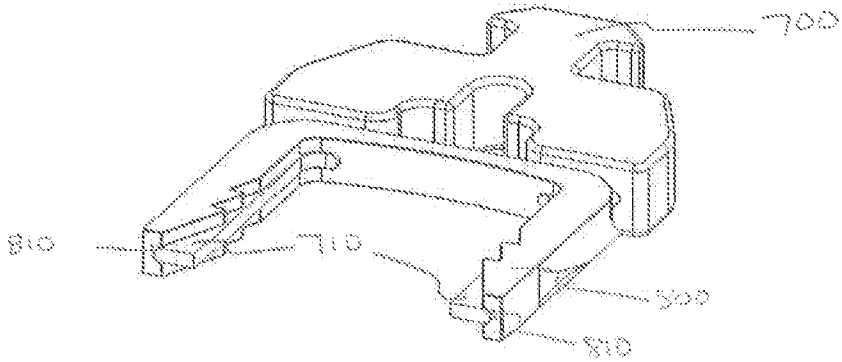

Figure 24

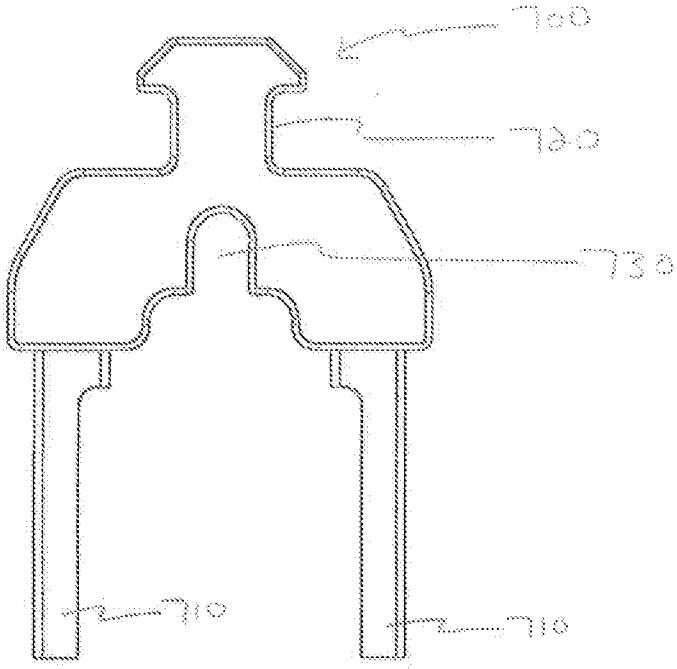

Figure 25

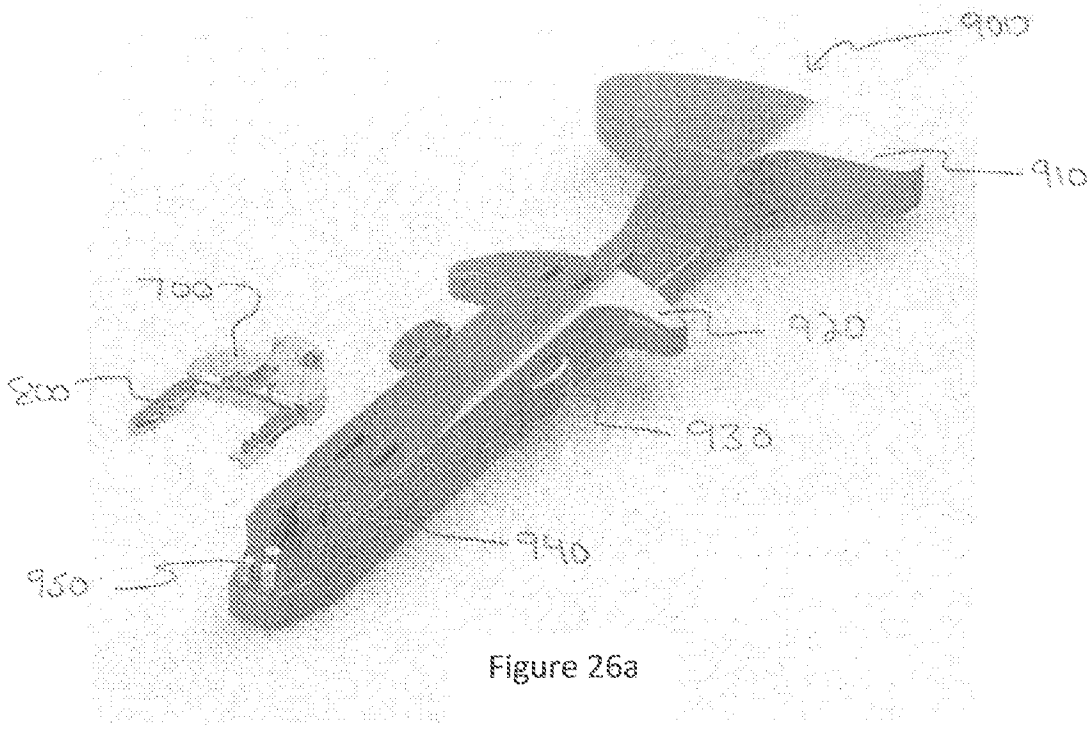

Figure 26a

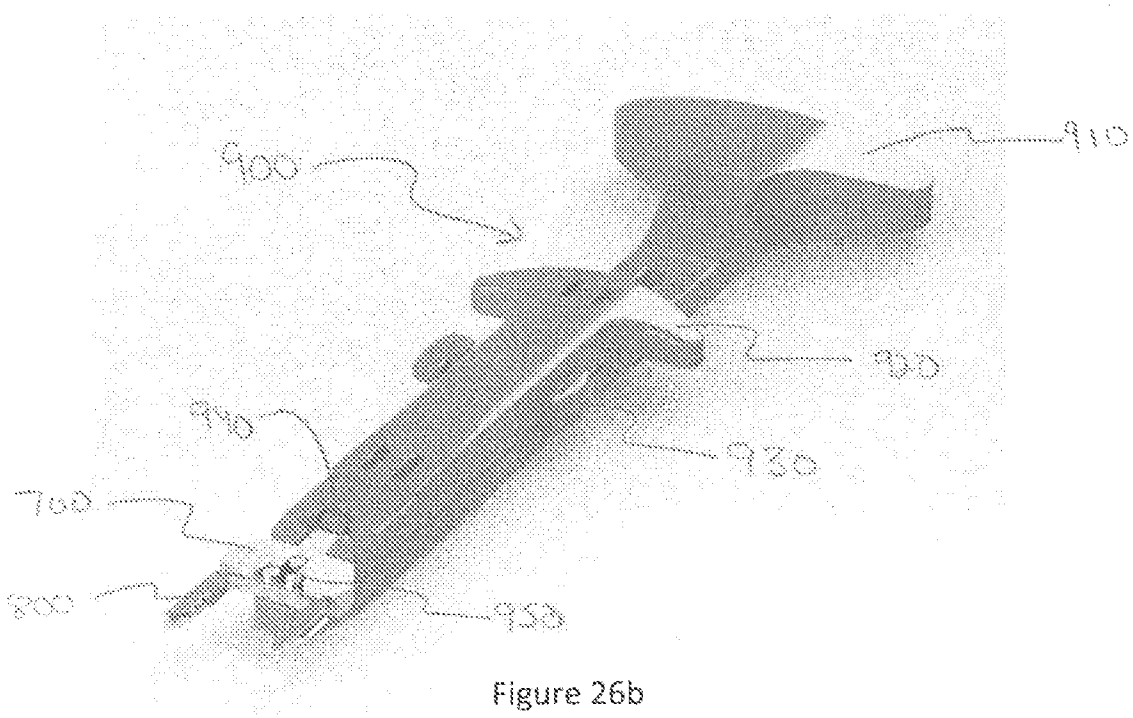

Figure 26b

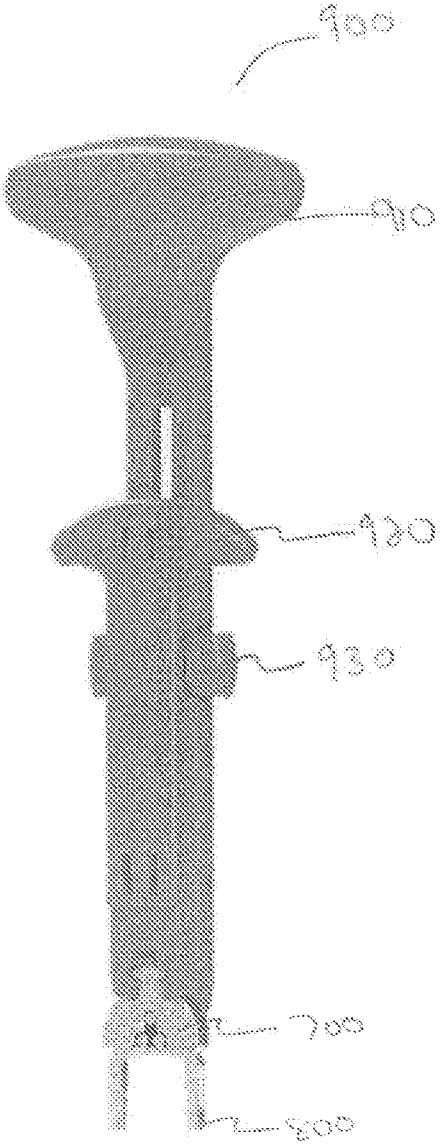

Figure 27a

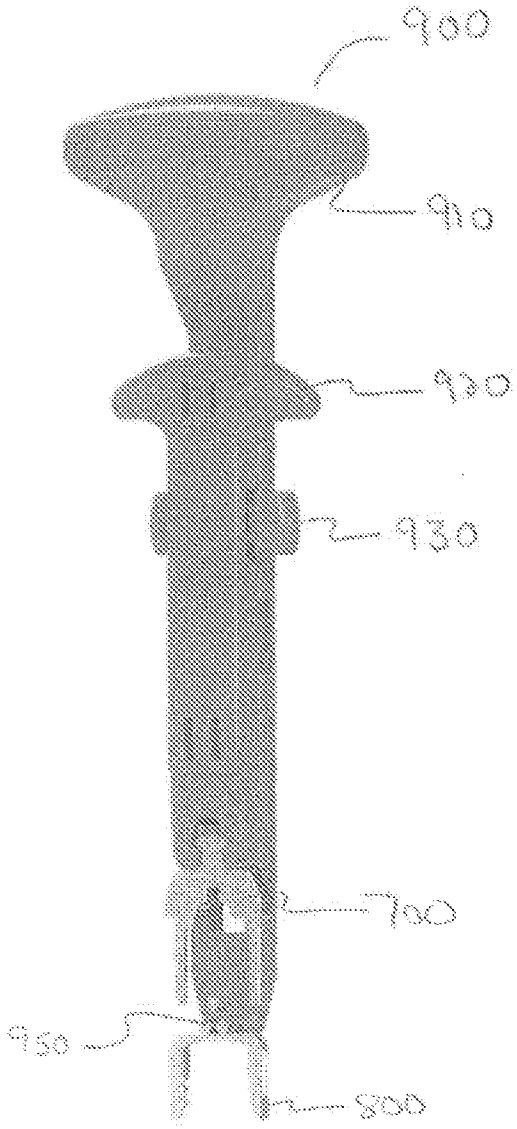

Figure 27b

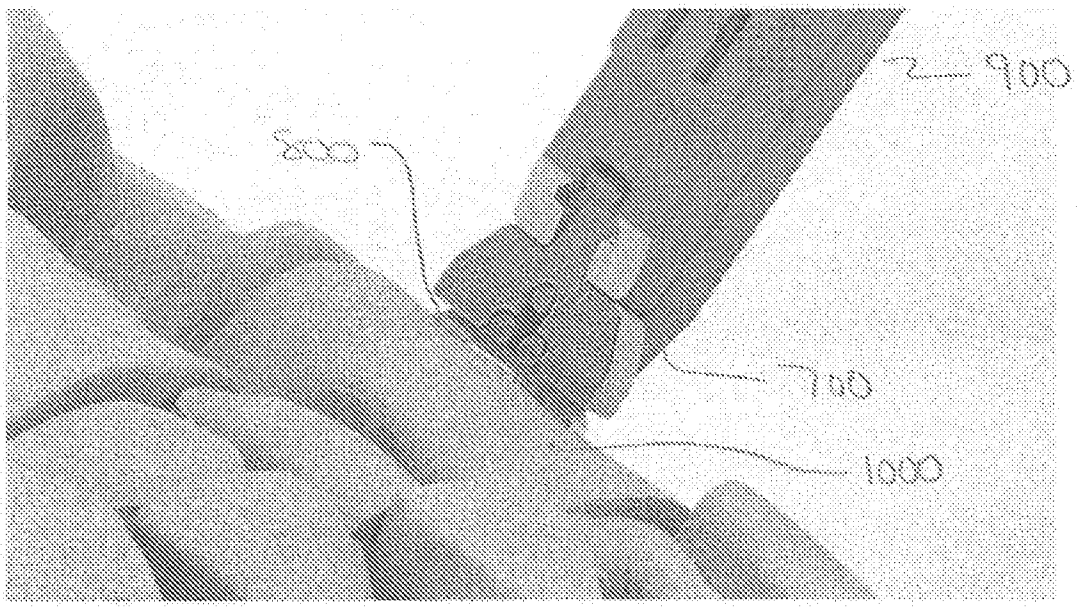

Figure 28

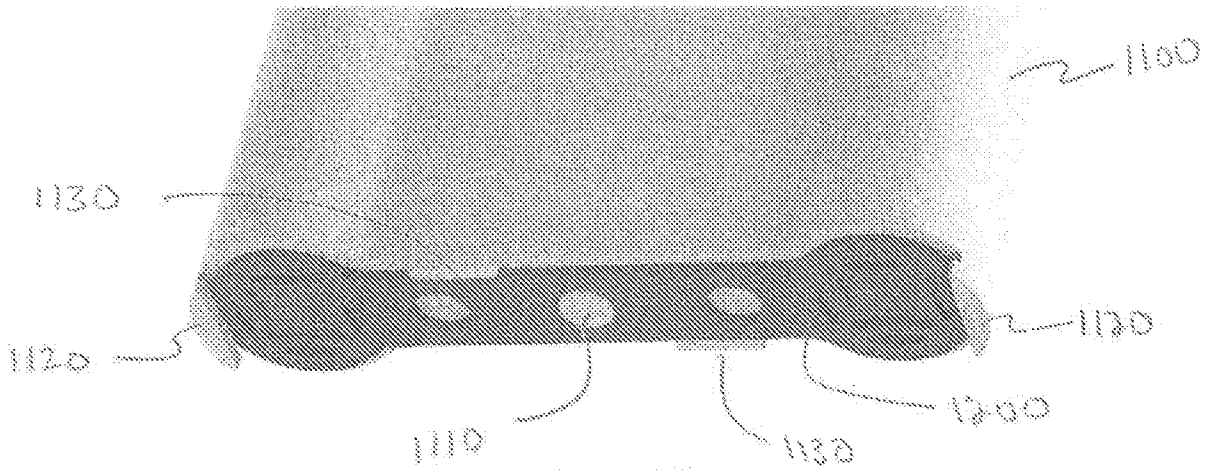

Figure 29

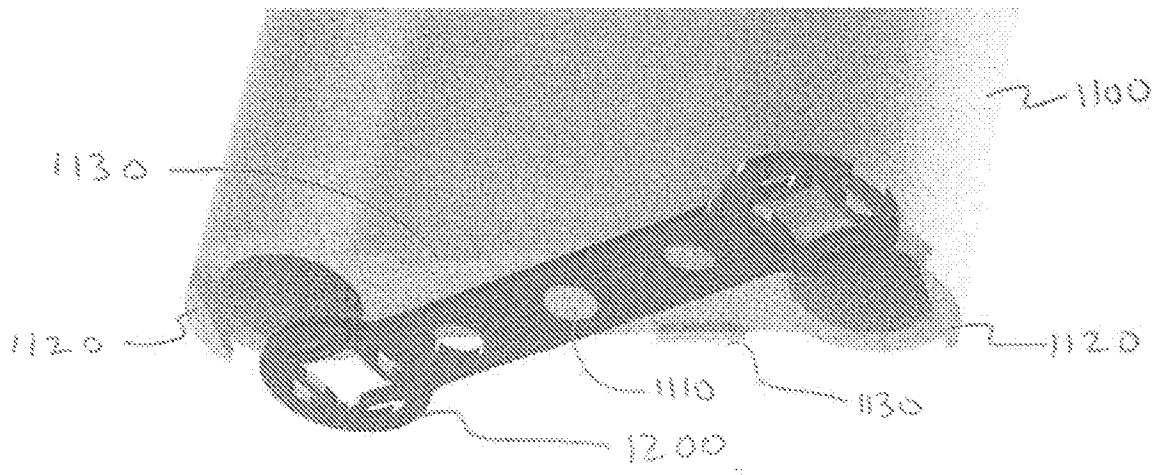

Figure 30

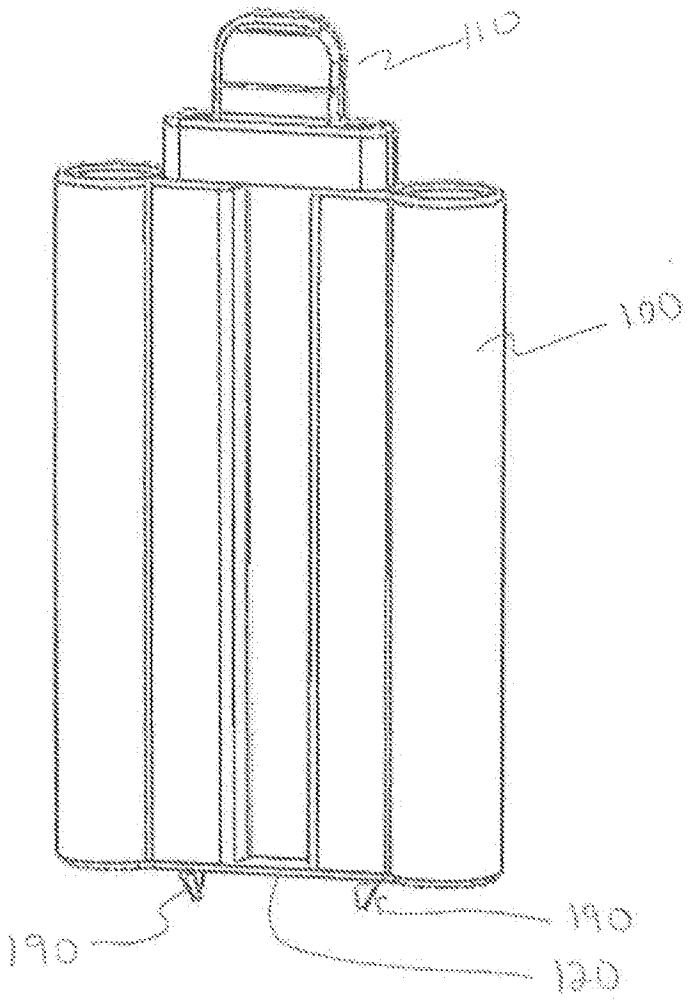

Figure 31

UNITED STATES PATENT AND TRADEMARK OFFICE

UNITED STATES DEPARTMENT OF COMMERCE
United States Patent and Trademark Office
Address: COMMISSIONER FOR PATENTS
P.O. Box 1450
Alexandria, Virginia 22313-1450
www.uspto.gov

APPLICATION NUMBER	FILING or 371(c) DATE	GRP ART UNIT	FIL FEE REC'D	ATTY.DOCKET.NO	TOT CLAIMS	IND CLAIMS
62/022,811	07/10/2014		130	CES-117249-3PROV		

CONFIRMATION NO. 6867
REPLACEMENT FILING RECEIPT

110108
Maywood IP Law
6800 North 2400 West
Amalga, UT 84335

OC000000084671168

Date Mailed: 07/28/2016

Receipt is acknowledged of this provisional patent application. It will not be examined for patentability and will become abandoned not later than twelve months after its filing date. Any correspondence concerning the application must include the following identification information: the U.S. APPLICATION NUMBER, FILING DATE, NAME OF APPLICANT, and TITLE OF INVENTION. Fees transmitted by check or draft are subject to collection. Please verify the accuracy of the data presented on this receipt. **If an error is noted on this Filing Receipt, please submit a written request for a Filing Receipt Correction. Please provide a copy of this Filing Receipt with the changes noted thereon. If you received a "Notice to File Missing Parts" for this application, please submit any corrections to this Filing Receipt with your reply to the Notice. When the USPTO processes the reply to the Notice, the USPTO will generate another Filing Receipt incorporating the requested corrections**

Inventor(s)

Vernon R. Hartdegen, Collierville, TN;
Michael Chad Hollis, Collierville, TN;

Applicant(s)

CROSSROADS EXTREMITY SYSTEMS, LLC, Memphis, TN;

Power of Attorney: The patent practitioners associated with Customer Number 110108

Permission to Access Application via Priority Document Exchange: Yes

Permission to Access Search Results: No

Applicant may provide or rescind an authorization for access using Form PTO/SB/39 or Form PTO/SB/69 as appropriate.

If Required, Foreign Filing License Granted: 07/21/2014

The country code and number of your priority application, to be used for filing abroad under the Paris Convention, is **US 62/022,811**

Projected Publication Date: None, application is not eligible for pre-grant publication

Non-Publication Request: No

Early Publication Request: No
**** SMALL ENTITY ****

Title

Bone Implant and Means of Insertion

Statement under 37 CFR 1.55 or 1.78 for AIA (First Inventor to File) Transition Applications: No

PROTECTING YOUR INVENTION OUTSIDE THE UNITED STATES

Since the rights granted by a U.S. patent extend only throughout the territory of the United States and have no effect in a foreign country, an inventor who wishes patent protection in another country must apply for a patent in a specific country or in regional patent offices. Applicants may wish to consider the filing of an international application under the Patent Cooperation Treaty (PCT). An international (PCT) application generally has the same effect as a regular national patent application in each PCT-member country. The PCT process **simplifies** the filing of patent applications on the same invention in member countries, but **does not result** in a grant of "an international patent" and does not eliminate the need of applicants to file additional documents and fees in countries where patent protection is desired.

Almost every country has its own patent law, and a person desiring a patent in a particular country must make an application for patent in that country in accordance with its particular laws. Since the laws of many countries differ in various respects from the patent law of the United States, applicants are advised to seek guidance from specific foreign countries to ensure that patent rights are not lost prematurely.

Applicants also are advised that in the case of inventions made in the United States, the Director of the USPTO must issue a license before applicants can apply for a patent in a foreign country. The filing of a U.S. patent application serves as a request for a foreign filing license. The application's filing receipt contains further information and guidance as to the status of applicant's license for foreign filing.

Applicants may wish to consult the USPTO booklet, "General Information Concerning Patents" (specifically, the section entitled "Treaties and Foreign Patents") for more information on timeframes and deadlines for filing foreign patent applications. The guide is available either by contacting the USPTO Contact Center at 800-786-9199, or it can be viewed on the USPTO website at http://www.uspto.gov/web/offices/pac/doc/general/index.html.

For information on preventing theft of your intellectual property (patents, trademarks and copyrights), you may wish to consult the U.S. Government website, http://www.stopfakes.gov. Part of a Department of Commerce initiative, this website includes self-help "toolkits" giving innovators guidance on how to protect intellectual property in specific countries such as China, Korea and Mexico. For questions regarding patent enforcement issues, applicants may call the U.S. Government hotline at 1-866-999-HALT (1-866-999-4258).

LICENSE FOR FOREIGN FILING UNDER

Title 35, United States Code, Section 184

Title 37, Code of Federal Regulations, 5.11 & 5.15

GRANTED

The applicant has been granted a license under 35 U.S.C. 184, if the phrase "IF REQUIRED, FOREIGN FILING LICENSE GRANTED" followed by a date appears on this form. Such licenses are issued in all applications where the conditions for issuance of a license have been met, regardless of whether or not a license may be required as set forth in 37 CFR 5.15. The scope and limitations of this license are set forth in 37 CFR 5.15(a) unless an earlier

license has been issued under 37 CFR 5.15(b). The license is subject to revocation upon written notification. The date indicated is the effective date of the license, unless an earlier license of similar scope has been granted under 37 CFR 5.13 or 5.14.

This license is to be retained by the licensee and may be used at any time on or after the effective date thereof unless it is revoked. This license is automatically transferred to any related applications(s) filed under 37 CFR 1.53(d). This license is not retroactive.

The grant of a license does not in any way lessen the responsibility of a licensee for the security of the subject matter as imposed by any Government contract or the provisions of existing laws relating to espionage and the national security or the export of technical data. Licensees should apprise themselves of current regulations especially with respect to certain countries, of other agencies, particularly the Office of Defense Trade Controls, Department of State (with respect to Arms, Munitions and Implements of War (22 CFR 121-128)); the Bureau of Industry and Security, Department of Commerce (15 CFR parts 730-774); the Office of Foreign AssetsControl, Department of Treasury (31 CFR Parts 500+) and the Department of Energy.

NOT GRANTED

No license under 35 U.S.C. 184 has been granted at this time, if the phrase "IF REQUIRED, FOREIGN FILING LICENSE GRANTED" DOES NOT appear on this form. Applicant may still petition for a license under 37 CFR 5.12, if a license is desired before the expiration of 6 months from the filing date of the application. If 6 months has lapsed from the filing date of this application and the licensee has not received any indication of a secrecy order under 35 U.S.C. 181, the licensee may foreign file the application pursuant to 37 CFR 5.15(b).

SelectUSA

The United States represents the largest, most dynamic marketplace in the world and is an unparalleled location for business investment, innovation, and commercialization of new technologies. The U.S. offers tremendous resources and advantages for those who invest and manufacture goods here. Through SelectUSA, our nation works to promote and facilitate business investment. SelectUSA provides information assistance to the international investor community; serves as an ombudsman for existing and potential investors; advocates on behalf of U.S. cities, states, and regions competing for global investment; and counsels U.S. economic development organizations on investment attraction best practices. To learn more about why the United States is the best country in the world to develop technology, manufacture products, deliver services, and grow your business, visit http://www.SelectUSA.gov or call +1-202-482-6800.

UNITED STATES PATENT AND TRADEMARK OFFICE

UNITED STATES DEPARTMENT OF COMMERCE
United States Patent and Trademark Office
Address: COMMISSIONER FOR PATENTS
P.O. Box 1450
Alexandria, Virginia 22313-1450
www.uspto.gov

APPLICATION NUMBER	FILING OR 371(C) DATE	FIRST NAMED APPLICANT	ATTY. DOCKET NO./TITLE
62/022,811	07/10/2014	Vernon R. Hartdegen	CES-117249-3PROV

CONFIRMATION NO. 6867

POA ACCEPTANCE LETTER

110108
Maywood IP Law
6800 North 2400 West
Amalga, UT 84335

OC000000084669958

Date Mailed: 07/28/2016

NOTICE OF ACCEPTANCE OF POWER OF ATTORNEY

This is in response to the Power of Attorney filed 07/18/2016.

The Power of Attorney in this application is accepted. Correspondence in this application will be mailed to the above address as provided by 37 CFR 1.33.

Questions about the contents of this notice and the requirements it sets forth should be directed to the Office of Data Management, Application Assistance Unit, at **(571) 272-4000** or **(571) 272-4200** or **1-888-786-0101**.

/zabraha/

PTO/AIA/80 (07-12)
Approved for use through 11/30/2014. OMB 0651-0035
U.S. Patent and Trademark Office; U.S DEPARTMENT OF COMMERCE
Under the Paperwork Reduction Act of 1995, no persons are required to respond to a collection of information unless it displays a valid OMB control number.

POWER OF ATTORNEY TO PROSECUTE APPLICATIONS BEFORE THE USPTO

I hereby revoke all previous powers of attorney given in the application identified in the attached statement under 37 CFR 3.73(c).

I hereby appoint:

[x] Practitioners associated with Customer Number: 110108

OR

[ ] Practitioner(s) named below (if more than ten patent practitioners are to be named, then a customer number must be used):

Name	Registration Number	Name	Registration Number

As attorney(s) or agent(s) to represent the undersigned before the United States Patent and Trademark Office (USPTO) in connection with any and all patent applications assigned only to the undersigned according to the USPTO assignment records or assignments documents attached to this form in accordance with 37 CFR 3.73(c).

Please change the correspondence address for the application identified in the attached statement under 37 CFR 3.73(c) to:

[x] The address associated with Customer Number: 110108

OR

[ ]

Firm or Individual Name			
Address			
City		State	Zip
Country			
Telephone		Email	

Assignee Name and Address: CROSSROADS EXTREMITY SYSTEMS, LLC
6055 Primacy Parkway
Suite 140
Memphis, TN 38119-5702

A copy of this form, together with a statement under 37 CFR 3.73(c) (Form PTO/AIA/96 or equivalent) is required to be Filed in each application in which this form is used. The statement under 37 CFR 3.73(c) may be completed by one of The practitioners appointed in this form, and must identify the application in which this Power of Attorney is to be filed.

SIGNATURE of Assignee of Record

The individual whose signature and title is supplied below is authorized to act on behalf of the assignee

Signature		Date	07/14/2016
Name	Vernon Hartdegen	Telephone	
Title	Senior Vice President of Operations		

This collection of information is required by 37 CFR 1.31, 1.32 and 1.33. The information is required to obtain or retain a benefit by the public which is to file (and by the USPTO to process) an application. Confidentiality is governed by 35 U.S.C. 122 and 37 CFR 1.11 and 1.14. This collection is estimated to take 3 minutes to complete, including gathering, preparing, and submitting the completed application form to the USPTO. Time will vary depending upon the individual case. Any comments on the amount of time you require to complete this form and/or suggestions for reducing this burden, should be sent to the Chief Information Officer, U.S. Patent and Trademark Office, U.S. Department of Commerce, P.O. Box 1450, Alexandria, VA 22313-1450. DO NOT SEND FEES OR COMPLETED FORMS TO THIS ADDRESS. **SEND TO: Commissioner for Patents, P.O. Box 1450, Alexandria, VA 22313-1450.**

If you need assistance in completing the form, call 1-800-PTO-9199 and select option 2.

Privacy Act Statement

The **Privacy Act of 1974 (P.L. 93-579)** requires that you be given certain information in connection with your submission of the attached form related to a patent application or patent. Accordingly, pursuant to the requirements of the Act, please be advised that: (1) the general authority for the collection of this information is 35 U.S.C. 2(b)(2); (2) furnishing of the information solicited is voluntary; and (3) the principal purpose for which the information is used by the U.S. Patent and Trademark Office is to process and/or examine your submission related to a patent application or patent. If you do not furnish the requested information, the U.S. Patent and Trademark Office may not be able to process and/or examine your submission, which may result in termination of proceedings or abandonment of the application or expiration of the patent.

The information provided by you in this form will be subject to the following routine uses:

1. The information on this form will be treated confidentially to the extent allowed under the Freedom of Information Act (5 U.S.C. 552) and the Privacy Act (5 U.S.C 552a). Records from this system of records may be disclosed to the Department of Justice to determine whether disclosure of these records is required by the Freedom of Information Act.
2. A record from this system of records may be disclosed, as a routine use, in the course of presenting evidence to a court, magistrate, or administrative tribunal, including disclosures to opposing counsel in the course of settlement negotiations.
3. A record in this system of records may be disclosed, as a routine use, to a Member of Congress submitting a request involving an individual, to whom the record pertains, when the individual has requested assistance from the Member with respect to the subject matter of the record.
4. A record in this system of records may be disclosed, as a routine use, to a contractor of the Agency having need for the information in order to perform a contract. Recipients of information shall be required to comply with the requirements of the Privacy Act of 1974, as amended, pursuant to 5 U.S.C. 552a(m).
5. A record related to an International Application filed under the Patent Cooperation Treaty in this system of records may be disclosed, as a routine use, to the International Bureau of the World Intellectual Property Organization, pursuant to the Patent Cooperation Treaty.
6. A record in this system of records may be disclosed, as a routine use, to another federal agency for purposes of National Security review (35 U.S.C. 181) and for review pursuant to the Atomic Energy Act (42 U.S.C. 218(c)).
7. A record from this system of records may be disclosed, as a routine use, to the Administrator, General Services, or his/her designee, during an inspection of records conducted by GSA as part of that agency's responsibility to recommend improvements in records management practices and programs, under authority of 44 U.S.C. 2904 and 2906. Such disclosure shall be made in accordance with the GSA regulations governing inspection of records for this purpose, and any other relevant (*i.e.*, GSA or Commerce) directive. Such disclosure shall not be used to make determinations about individuals.
8. A record from this system of records may be disclosed, as a routine use, to the public after either publication of the application pursuant to 35 U.S.C. 122(b) or issuance of a patent pursuant to 35 U.S.C. 151. Further, a record may be disclosed, subject to the limitations of 37 CFR 1.14, as a routine use, to the public if the record was filed in an application which became abandoned or in which the proceedings were terminated and which application is referenced by either a published application, an application open to public inspection or an issued patent.
9. A record from this system of records may be disclosed, as a routine use, to a Federal, State, or local law enforcement agency, if the USPTO becomes aware of a violation or potential violation of law or regulation.

PTO/SB/16 (03-13)
Approved for use through 01/31/2014. OMB 0651-0032
U.S. Patent and Trademark Office; U.S. DEPARTMENT OF COMMERCE
Under the Paperwork Reduction Act of 1995 no persons are required to respond to a collection of information unless it displays a valid OMB control number

PROVISIONAL APPLICATION FOR PATENT COVER SHEET – Page 1 of 2

This is a request for filing a PROVISIONAL APPLICATION FOR PATENT under 37 CFR 1.53(c).

Express Mail Label No. _____

INVENTOR(S)

Given Name (first and middle [if any])	Family Name or Surname	Residence (City and either State or Foreign Country)
Vernon R.	Hartdegen	Collierville, TN
Michael Chad	Hollis	Collierville, TN

Additional inventors are being named on the _____ separately numbered sheets attached hereto.

TITLE OF THE INVENTION (500 characters max):

Bone Implant and Means of Insertion

Direct all correspondence to: **CORRESPONDENCE ADDRESS**

☑ The address corresponding to Customer Number: ~~23526~~ 110108

OR

☐ Firm or Individual Name

Address

City	State	Zip
Country	Telephone	Email

ENCLOSED APPLICATION PARTS (*check all that apply*)

☑ Application Data Sheet. See 37 CFR 1.76.

☐ CD(s), Number of CDs _____

☑ Drawing(s) *Number of Sheets* 20

☐ Other (specify) _____

☑ Specification (e.g., description of the invention) *Number of Pages* 17

Fees Due: Filing Fee of $260 ($130 for small entity) ($65 for micro entity). If the specification and drawings exceed 100 sheets of paper, an application size fee is also due, which is $400 ($200 for small entity) ($100 for micro entity) for each additional 50 sheets or fraction thereof. See 35 U.S.C. 41(a)(1)(G) and 37 CFR 1.16(s).

METHOD OF PAYMENT OF THE FILING FEE AND APPLICATION SIZE FEE FOR THIS PROVISIONAL APPLICATION FOR PATENT

☑ Applicant asserts small entity status. See 37 CFR 1.27.

☐ Applicant certifies micro entity status. See 37 CFR 1.29. Applicant must attach form PTO/SB/15A or B or equivalent.

☐ A check or money order made payable to the *Director of the United States Patent and Trademark Office* is enclosed to cover the filing fee and application size fee (if applicable).

☐ Payment by credit card. Form PTO-2038 is attached.

☑ The Director is hereby authorized to charge the filing fee and application size fee (if applicable) or credit any overpayment to Deposit Account Number: 14-1263.

$130.00

TOTAL FEE AMOUNT ($)

USE ONLY FOR FILING A PROVISIONAL APPLICATION FOR PATENT

This collection of information is required by 37 CFR 1.51. The information is required to obtain or retain a benefit by the public which is to file (and by the USPTO to process) an application. Confidentiality is governed by 35 U.S.C. 122 and 37 CFR 1.11 and 1.14. This collection is estimated to take 10 hours to complete, including gathering, preparing, and submitting the completed application form to the USPTO. Time will vary depending upon the individual case. Any comments on the amount of time you require to complete this form and/or suggestions for reducing this burden, should be sent to the Chief Information Officer, U.S. Patent and Trademark Office, U.S. Department of Commerce, P.O. Box 1450, Alexandria, VA 22313-1450. DO NOT SEND FEES OR COMPLETED FORMS TO THIS ADDRESS. **SEND TO: Commissioner for Patents, P.O. Box 1450, Alexandria, VA 22313-1450.**

If you need assistance in completing the form, call 1-800-PTO-9199 and select option 2.

PTO/SB/16 (03-13)
Approved for use through 01/31/2014. OMB 0651-0032
U.S. Patent and Trademark Office; U.S. DEPARTMENT OF COMMERCE
Under the Paperwork Reduction Act of 1995 no persons are required to respond to a collection of information unless it displays a valid OMB control number

PROVISIONAL APPLICATION FOR PATENT COVER SHEET – Page 2 of 2

The invention was made by an agency of the United States Government or under a contract with an agency of the United States Government.

- [x] No.
- [ ] Yes, the invention was made by an agency of the U.S. Government. The U.S. Government agency name is: _____
- [ ] Yes, the invention was made under a contract with an agency of the U.S. Government. The name of the U.S. Government agency and Government contract number are: _____

WARNING:

Petitioner/applicant is cautioned to avoid submitting personal information in documents filed in a patent application that may contribute to identity theft. Personal information such as social security numbers, bank account numbers, or credit card numbers (other than a check or credit card authorization form PTO-2038 submitted for payment purposes) is never required by the USPTO to support a petition or an application. If this type of personal information is included in documents submitted to the USPTO, petitioners/applicants should consider redacting such personal information from the documents before submitting them to the USPTO. Petitioner/applicant is advised that the record of a patent application is available to the public after publication of the application (unless a non-publication request in compliance with 37 CFR 1.213(a) is made in the application) or issuance of a patent. Furthermore, the record from an abandoned application may also be available to the public if the application is referenced in a published application or an issued patent (see 37 CFR 1.14). Checks and credit card authorization forms PTO-2038 submitted for payment purposes are not retained in the application file and therefore are not publicly available.

SIGNATURE ~~_____~~ /G. Jo Hays/ DATE ~~July 10, 2013~~ July 15, 2016

TYPED OR PRINTED NAME ~~William R. Robinson~~ G. Jo Hays REGISTRATION NO. ~~27,224~~ 65531 (*if appropriate*)

TELEPHONE ~~908-722-0700~~ 801-677-0700 DOCKET NUMBER ~~117249-3~~ CES-117249-3 PROV

PATENT
Docket No. CES-117249-3 PROV

IN THE UNITED STATES PATENT AND TRADEMARK OFFICE

Applicants:	Vernon R. Hartdegen and Michael Chad Hollis			)	
				)	
Serial No.:	62/022811	Confirmation No.	6867	)	
				)	Group Art
Filed:	07/10/2014			)	Unit: N/A
				)	
For:	BONE IMPLANT AND MEANS OF INSERTION			)	
				)	
Examiner:	N/A			)	
Customer No.:	110108				

UPDATED PROVISIONAL COVER SHEET AND APPLICATION DATA SHEET

Assistant Commissioner
For Patents
PO Box 1450
Alexandria, VA 22313-1450

Dear Sir:

An updated Provisional Cover Sheet is submitted concurrently herewith. The updated PCS includes strikethrough showing deletions and underlining showing additions relative to the information already of record in the application. The information that is being changed in the PCS is set forth in the first table below. The change in Correspondence Address reflects the information in the Power of Attorney submitted concurrently herewith. The signature block has been updated to show current signature information. If there is any impediment to entry of the updated Provisional Cover Sheet in the present application, the Office is respectfully requested to contact the undersigned.

An updated Application Data Sheet is submitted concurrently herewith. The ADS includes strikethrough showing deletions and underlining showing additions relative to the information already of record in the application. The information that is being changed in the ADS is set forth in the second table below. The changes reflect the information in the Power of

Attorney and Statement Under 37 CFR 3.73(c) submitted concurrently herewith. If there is any impediment to entry of the updated Application Data Sheet in the present application, the Office is respectfully requested to contact the undersigned.

Table of Changes to the Provisional Cover Sheet

PCS Section	From	To
Correspondence Address		
Customer Number	23526	110108
Signature	Robinson (Handwritten)	G. Jo Hays (S-signature)
Date	July 10, 2013	July 15, 2016
Typed or Printed Name	William R. Robinson	G. Jo Hays
Registration No.	27224	65531
Telephone	908-722-0700	801-677-0700
Docket No.	117249-3	CES-117249-3 PROV

Table of Changes to the Application Data Sheet

ADS Section	From	To
Correspondence Information		
Customer Number	23526	110108
Email Address 1	wrrobinson@nmmlaw.com	jo@maywoodip.com
Email Address 2	<BLANK>	dave@maywoodip.com
Application Information		
Attorney Docket Number	117249-3	CES-117249-3 PROV
Representative Information		
Customer Number	<BLANK>	110108
Applicant Information		
Applicant 1		
Assignee	<BLANK>	<CHECKED>
If the Applicant is an Organization check here	<BLANK>	<CHECKED>
Organization Name	<BLANK>	CROSSROADS EXTREMITY SYSTEMS, LLC
Mailing Address for Applicant		
Address 1	<BLANK>	6055 Primacy Parkway
Address 2	<BLANK>	Suite 140
City	<BLANK>	Memphis
State/Province	<BLANK>	TN
Country	<BLANK>	US
Postal Code	<BLANK>	38119-5702

ADS Section	From	To
Phone Number	<BLANK>	801-677-0700
Fax Number	<BLANK>	801-677-0500
Email Address	<BLANK>	jo@maywoodip.com
Assignee Information		
Assignee 1		
If the Assignee or Non-Applicant Assignee is an Organization check here	<CHECKED>	<BLANK>
Organization Name	OrthoDiscovery Group LLC	<BLANK>
Mailing Address for Assignee		
Address 1	132 Cotton Ridge Cove	<BLANK>
		<BLANK>
City	Cordova	<BLANK>
State/Province	TN	<BLANK>
Country	US	<BLANK>
Postal Code	38018	<BLANK>
Signature	(Handwritten)	G. Jo Hays (S-signature)
Date	2014-07-10	2016-07-15
First Name	William	G. Jo
Last Name	Robinson	Hays
Registration Number	27224	65531

Dated July 15, 2016.

Respectfully submitted,

/G. Jo Hays/

G. Jo Hays
Agent for Applicants
Registration No. 65531

MAYWOOD IP LAW

10704 Topview Road
South Jordan, UT 84095
Telephone: (801) 677-0700 x102
Fax: (801) 677-0500

Under the Paperwork Reduction Act of 1995, no persons are required to respond to a collection of information unless it contains a valid OMB control number.

Application Data Sheet 37 CFR 1.76	Attorney Docket Number	117249-3
	Application Number	
Title of Invention	Bone Implant and Means of Insertion	

The application data sheet is part of the provisional or nonprovisional application for which it is being submitted. The following form contains the bibliographic data arranged in a format specified by the United States Patent and Trademark Office as outlined in 37 CFR 1.76.
This document may be completed electronically and submitted to the Office in electronic format using the Electronic Filing System (EFS) or the document may be printed and included in a paper filed application.

Secrecy Order 37 CFR 5.2

☐ Portions or all of the application associated with this Application Data Sheet may fall under a Secrecy Order pursuant to 37 CFR 5.2 (Paper filers only. Applications that fall under Secrecy Order may not be filed electronically.)

Inventor Information:

Inventor 1 Remove

Legal Name

Prefix	Given Name	Middle Name	Family Name	Suffix
	Vernon	R.	Hartdegen	

Residence Information (Select One) ◉ US Residency ◯ Non US Residency ◯ Active US Military Service

City	Collierville	State/Province	TN	Country of Residence	US

Mailing Address of Inventor:

Address 1	1284 Grey Wolf Drive		
Address 2			
City	Collierville	State/Province	TN
Postal Code	38017	Country i	US

Inventor 2 Remove

Legal Name

Prefix	Given Name	Middle Name	Family Name	Suffix
	Michael	Chad	Hoillis	

Residence Information (Select One) ◉ US Residency ◯ Non US Residency ◯ Active US Military Service

City	Collierville	State/Province	TN	Country of Residence	US

Mailing Address of Inventor:

Address 1	10278 Willow Reade Cove		
Address 2			
City	Collierville	State/Province	TN
Postal Code	38017	Country i	US

All Inventors Must Be Listed - Additional Inventor Information blocks may be generated within this form by selecting the **Add** button. Add

Correspondence Information:

Enter either Customer Number or complete the Correspondence Information section below.
For further information see 37 CFR 1.33(a).

PTO/AIA/14 (12-13)
Approved for use through 01/31/2014. OMB 0651-0032
U.S. Patent and Trademark Office; U.S. DEPARTMENT OF COMMERCE
Under the Paperwork Reduction Act of 1995, no persons are required to respond to a collection of information unless it contains a valid OMB control number.

Application Data Sheet 37 CFR 1.76	Attorney Docket Number	117249-3
	Application Number	
Title of Invention	Bone Implant and Means of Insertion	

☐ **An Address is being provided for the correspondence Information of this application.**

Customer Number	~~23520~~ 110108		
Email Address	~~wrrobinson@nmmlaw.com~~ jo@maywoodip.com dave@maywoodip.com	Add Email	Remove Email

Application Information:

Title of the Invention	Bone Implant and Means of Insertion		
Attorney Docket Number	~~117249-3~~ CES-117249-3 PROV	**Small Entity Status Claimed** ☒	
Application Type	Provisional		
Subject Matter	Utility		
Total Number of Drawing Sheets (if any)	20	**Suggested Figure for Publication (if any)**	2d

Filing By Reference :

Only complete this section when filing an application by reference under 35 U.S.C. 111(c) and 37 CFR 1.57 (a). Do not complete this section if application papers including a specification and any drawings are being filed. Any domestic benefit or foreign priority information must be provided in the appropriate section(s) below (i.e., "Domestic Benefit/National Stage Information" and "Foreign Priority Information").

For the purposes of a filing date under 37 CFR 1.53(b), the description and any drawings of the present application are replaced by this reference to the previously filed application, subject to conditions and

Application number of the previously filed application	Filing date (YYYY-MM-DD)	Intellectual Property Authority or Country

Publication Information:

☐ Request Early Publication (Fee required at time of Request 37 CFR 1.219)

☐ **Request Not to Publish.** I hereby request that the attached application not be published under 35 U.S.C. 122(b) and certify that the invention disclosed in the attached application **has not and will not** be the subject of an application filed in another country, or under a multilateral international agreement, that requires publication at eighteen months after filing.

Representative Information:

Representative information should be provided for all practitioners having a power of attorney in the application. Providing this information in the Application Data Sheet does not constitute a power of attorney in the application (see 37 CFR 1.32). Either enter Customer Number or complete the Representative Name section below. If both sections are completed the customer Number will be used for the Representative Information during processing.

Please Select One:	◉ Customer Number	○ US Patent Practitioner	○ Limited Recognition (37 CFR 11.9)
Customer Number	110108		

Under the Paperwork Reduction Act of 1995, no persons are required to respond to a collection of information unless it contains a valid OMB control number.

Application Data Sheet 37 CFR 1.76	Attorney Docket Number	117249-3
	Application Number	
Title of Invention	Bone Implant and Means of Insertion	

Domestic Benefit/National Stage Information:

This section allows for the applicant to either claim benefit under 35 U.S.C. 119(e), 120, 121, or 365(c) or indicate National Stage entry from a PCT application. Providing this information in the application data sheet constitutes the specific reference required by 35 U.S.C. 119(e) or 120, and 37 CFR 1.78.
When referring to the current application, please leave the application number blank.

Prior Application Status			Remove
Application Number	Continuity Type	Prior Application Number	Filing Date (YYYY-MM-DD)

Additional Domestic Benefit/National Stage Data may be generated within this form by selecting the **Add**button.

Foreign Priority Information:

This section allows for the applicant to claim priority to a foreign application. Providing this information in the application data sheet constitutes the claim for priority as required by 35 U.S.C. 119(b) and 37 CFR 1.55(d). When priority is claimed to a foreign application that is eligible for retrieval under the priority document exchange program (PDX) the information will be used by the Office to automatically attempt retrieval pursuant to 37 CFR 1.55(h)(1) and (2). Under the PDX program, applicant bears the ultimate responsibility for ensuring that a copy of the foreign application is received by the Office from the participating foreign intellectual property office, or a certified copy of the foreign priority application is filed, within the time period specified in 37 CFR 1.55(g)(1).

			Remove
Application Number	Country[i]	Filing Date (YYYY-MM-DD)	Access Code[ii] (if applicable)

Additional Foreign Priority Data may be generated within this form by selecting the **Add**button.

Statement under 37 CFR 1.55 or 1.78 for AIA (First Inventor to File) Transition Applications

☐ This application (1) claims priority to or the benefit of an application filed before March 16, 2013 and (2) also contains, or contained at any time, a claim to a claimed invention that has an effective filing date on or after March 16, 2013.
NOTE: By providing this statement under 37 CFR 1.55 or 1.78, this application, with a filing date on or after March 16, 2013, will be examined under the first inventor to file provisions of the AIA.

PTO/AIA/14 (12-13)
Approved for use through 01/31/2014. OMB 0651-0032
U.S. Patent and Trademark Office; U.S. DEPARTMENT OF COMMERCE
Under the Paperwork Reduction Act of 1995, no persons are required to respond to a collection of information unless it contains a valid OMB control number.

Application Data Sheet 37 CFR 1.76	Attorney Docket Number	117249-3
	Application Number	
Title of Invention	Bone Implant and Means of Insertion	

Authorization to Permit Access:

[x] Authorization to Permit Access to the Instant Application by the Participating Offices

If checked, the undersigned hereby grants the USPTO authority to provide the European Patent Office (EPO), the Japan Patent Office (JPO), the Korean Intellectual Property Office (KIPO), the World Intellectual Property Office (WIPO), and any other intellectual property offices in which a foreign application claiming priority to the instant patent application is filed access to the instant patent application. See 37 CFR 1.14(c) and (h). This box should not be checked if the applicant does not wish the EPO, JPO, KIPO, WIPO, or other intellectual property office in which a foreign application claiming priority to the instant patent application is filed to have access to the instant patent application.

In accordance with 37 CFR 1.14(h)(3), access will be provided to a copy of the instant patent application with respect to: 1) the instant patent application-as-filed; 2) any foreign application to which the instant patent application claims priority under 35 U.S.C. 119(a)-(d) if a copy of the foreign application that satisfies the certified copy requirement of 37 CFR 1.55 has been filed in the instant patent application; and 3) any U.S. application-as-filed from which benefit is sought in the instant patent application.
In accordance with 37 CFR 1.14(c), access may be provided to information concerning the date of filing this Authorization.

Applicant Information:

Providing assignment information in this section does not substitute for compliance with any requirement of part 3 of Title 37 of CFR to have an assignment recorded by the Office.

Applicant 1

If the applicant is the inventor (or the remaining joint inventor or inventors under 37 CFR 1.45), this section should not be completed. The information to be provided in this section is the name and address of the legal representative who is the applicant under 37 CFR 1.43; or the name and address of the assignee, person to whom the inventor is under an obligation to assign the invention, or person who otherwise shows sufficient proprietary interest in the matter who is the applicant under 37 CFR 1.46. If the applicant is an applicant under 37 CFR 1.46 (assignee, person to whom the inventor is obligated to assign, or person who otherwise shows sufficient proprietary interest) together with one or more joint inventors, then the joint inventor or inventors who are also the applicant should be identified in this section.

Clear

● **Assignee** ○ Legal Representative under 35 U.S.C. 117 ○ Joint Inventor

○ **Person to whom the inventor is obligated to assign.** ○ Person who shows sufficient proprietary interest

If applicant is the legal representative, indicate the authority to file the patent application, the inventor is:

Name of the Deceased or Legally Incapacitated Inventor :

If the Applicant is an Organization check here. [X]

Prefix	Given Name	Middle Name	Family Name	Suffix

Organization Name: CROSSROADS EXTREMITY SYSTEMS, LLC

Under the Paperwork Reduction Act of 1995, no persons are required to respond to a collection of information unless it contains a valid OMB control number.

Application Data Sheet 37 CFR 1.76	Attorney Docket Number	117249-3
	Application Number	
Title of Invention	Bone Implant and Means of Insertion	

Mailing Address Information For Applicant:			
Address 1	6055 Primacy Parkway		
Address 2	Suite 140		
City	Memphis	State/Province	TN
Country i	US	Postal Code	38119-5702
Phone Number	801-677-0700	Fax Number	801-677-0500
Email Address	jo@maywoodip.com		

Additional Applicant Data may be generated within this form by selecting the Add button.

Assignee Information including Non-Applicant Assignee Information:

Providing assignment information in this section does not subsitute for compliance with any requirement of part 3 of Title 37 of CFR to have an assignment recorded by the Office.

Assignee 1

Complete this section if assignee information, including non-applicant assignee information, is desired to be included on the patent application publication . An assignee-applicant identified in the "Applicant Information" section will appear on the patent application publication as an applicant. For an assignee-applicant, complete this section only if identification as an assignee is also desired on the patent application publication.

If the Assignee or Non-Applicant Assignee is an Organization check here. ☐

Organization Name	~~OrtheDiscovery Group LLC~~		
Mailing Address Information For Assignee including Non-Applicant Assignee:			
Address 1	~~132 Cotton Ridge Cove~~		
Address 2			
City	~~Cordova~~	State/Province	~~TN~~
Country i	~~US~~	Postal Code	~~38018~~
Phone Number		Fax Number	
Email Address			

Additional Assignee or Non-Applicant Assignee Data may be generated within this form by selecting the Add button.

Under the Paperwork Reduction Act of 1995, no persons are required to respond to a collection of information unless it contains a valid OMB control number.

Application Data Sheet 37 CFR 1.76	Attorney Docket Number	117249-3
	Application Number	
Title of Invention	Bone Implant and Means of Insertion	

Signature:

NOTE: This form must be signed in accordance with 37 CFR 1.33. See 37 CFR 1.4 for signature requirements and certifications.

Signature	/G. Jo Hays/			Date (YYYY-MM-DD)	~~2014-07-10~~ 2016-07-15
First Name	~~William~~ G. Jo	Last Name	~~Robinson~~ Hays	Registration Number	~~27224~~ 65531

Additional Signature may be generated within this form by selecting the Add button.

This collection of information is required by 37 CFR 1.76. The information is required to obtain or retain a benefit by the public which is to file (and by the USPTO to process) an application. Confidentiality is governed by 35 U.S.C. 122 and 37 CFR 1.14. This collection is estimated to take 23 minutes to complete, including gathering, preparing, and submitting the completed application data sheet form to the USPTO. Time will vary depending upon the individual case. Any comments on the amount of time you require to complete this form and/or suggestions for reducing this burden, should be sent to the Chief Information Officer, U.S. Patent and Trademark Office, U.S. Department of Commerce, P.O. Box 1450, Alexandria, VA 22313-1450. DO NOT SEND FEES OR COMPLETED FORMS TO THIS ADDRESS. **SEND TO: Commissioner for Patents, P.O. Box 1450, Alexandria, VA 22313-1450.**

Electronic Acknowledgement Receipt

EFS ID:	26376142
Application Number:	62022811
International Application Number:	
Confirmation Number:	6867
Title of Invention:	Bone Implant and Means of Insertion
First Named Inventor/Applicant Name:	Vernon R. Hartdegen
Customer Number:	23526
Filer:	David Warren Meibos/Hayley Read
Filer Authorized By:	David Warren Meibos
Attorney Docket Number:	117249-3
Receipt Date:	18-JUL-2016
Filing Date:	10-JUL-2014
Time Stamp:	14:28:01
Application Type:	Provisional

Payment information:

Submitted with Payment	no

File Listing:

Document Number	Document Description	File Name	File Size(Bytes)/ Message Digest	Multi Part /.zip	Pages (if appl.)
1	Assignee showing of ownership per 37 CFR 3.73	CES_117249_3_PROV_Statement_AIA96_signed.pdf	6662821 ad3a9380b07f53bdb7bedc628b36df9316dc6086	no	3

Warnings:

Information:					
2	Power of Attorney	CES_117249_3_PROV_POA_AIA80_signed.pdf	5242772 30cb4fbee100bd54202c3df200b9e58834a4e3bf	no	2
Warnings:					
Information:					
3	Provisional Cover Sheet (SB16)	CES_117249_3_PROV_PCS_SB16_updated.pdf	257332 42f460af7897fcfea7eae8d33848269bc2b2bec9	no	2
Warnings:					
This is not a USPTO supplied Provisional Cover Sheet SB16 form.					
Information:					
4	Miscellaneous Incoming Letter	CES_117249_3_PROV_PCS_ADS_Change_Letter.pdf	50002 733daad9d826a6d1336b619f53b87b1bbd0056ba	no	3
Warnings:					
Information:					
5	Application Data Sheet	CES_117249_3_PROV_ADS_AIA14_updated.pdf	894028 70c2bbe72b70e124b2a8b273573a3c1f4602fae5	no	6
Warnings:					
Information:					
This is not an USPTO supplied ADS fillable form					
			Total Files Size (in bytes):	13106955	

This Acknowledgement Receipt evidences receipt on the noted date by the USPTO of the indicated documents, characterized by the applicant, and including page counts, where applicable. It serves as evidence of receipt similar to a Post Card, as described in MPEP 503.

<u>New Applications Under 35 U.S.C. 111</u>
If a new application is being filed and the application includes the necessary components for a filing date (see 37 CFR 1.53(b)-(d) and MPEP 506), a Filing Receipt (37 CFR 1.54) will be issued in due course and the date shown on this Acknowledgement Receipt will establish the filing date of the application.

<u>National Stage of an International Application under 35 U.S.C. 371</u>
If a timely submission to enter the national stage of an international application is compliant with the conditions of 35 U.S.C. 371 and other applicable requirements a Form PCT/DO/EO/903 indicating acceptance of the application as a national stage submission under 35 U.S.C. 371 will be issued in addition to the Filing Receipt, in due course.

<u>New International Application Filed with the USPTO as a Receiving Office</u>
If a new international application is being filed and the international application includes the necessary components for an international filing date (see PCT Article 11 and MPEP 1810), a Notification of the International Application Number and of the International Filing Date (Form PCT/RO/105) will be issued in due course, subject to prescriptions concerning national security, and the date shown on this Acknowledgement Receipt will establish the international filing date of the application.

PTO/AIA/96 (08-12)
Approved for use through 01/31/2013. OMB 0651-0031
U.S. Patent and Trademark Office; U.S. DEPARTMENT OF COMMERCE
Under the Paperwork Reduction Act of 1995, no persons are required to respond to a collection of information unless it displays a valid OMB control number.

STATEMENT UNDER 37 CFR 3.73(c)

Applicant/Patent Owner: Vernon R. Hartdegen and Michael Chad Hollis

Application No./Patent No.: 62/022811 Filed/Issue Date: July 10, 2014

Titled: BONE IMPLANT AND MEANS OF INSERTION

CROSSROADS EXTREMITY SYSTEMS, LLC, a corporation

(Name of Assignee) (Type of Assignee, e.g., corporation, partnership, university, government agency, etc.)

states that, for the patent application/patent identified above, it is (choose one of options 1, 2, 3 or 4 below):

1. ☑ The assignee of the entire right, title, and interest.

2. ☐ An assignee of less than the entire right, title, and interest (check applicable box):

☐ The extent (by percentage) of its ownership interest is _____%. Additional Statement(s) by the owners holding the balance of the interest must be submitted to account for 100% of the ownership interest.

☐ There are unspecified percentages of ownership. The other parties, including inventors, who together own the entire right, title and interest are:

Additional Statement(s) by the owner(s) holding the balance of the interest must be submitted to account for the entire right, title, and interest.

3. ☐ The assignee of an undivided interest in the entirety (a complete assignment from one of the joint inventors was made). The other parties, including inventors, who together own the entire right, title, and interest are:

Additional Statement(s) by the owner(s) holding the balance of the interest must be submitted to account for the entire right, title, and interest.

4. ☐ The recipient, via a court proceeding or the like (*e.g.*, bankruptcy, probate), of an undivided interest in the entirety (a complete transfer of ownership interest was made). The certified document(s) showing the transfer is attached.

The interest identified in option 1, 2 or 3 above (not option 4) is evidenced by either (choose one of options A or B below):

A. ☐ An assignment from the inventor(s) of the patent application/patent identified above. The assignment was recorded in the United States Patent and Trademark Office at Reel _____, Frame _____, or for which a copy thereof is attached.

B. ☑ A chain of title from the inventor(s), of the patent application/patent identified above, to the current assignee as follows:

1. From: Vernon R. Hartdegen To: ORTHODISCOVERY GROUP LLC

The document was recorded in the United States Patent and Trademark Office at Reel 033502, Frame 0777, or for which a copy thereof is attached.

2. From: Michael Chad Hollis To: ORTHODISCOVERY GROUP LLC

The document was recorded in the United States Patent and Trademark Office at Reel 033502, Frame 0777, or for which a copy thereof is attached.

This collection of information is required by 37 CFR 3.73(b). The information is required to obtain or retain a benefit by the public which is to file (and by the USPTO to process) an application. Confidentiality is governed by 35 U.S.C. 122 and 37 CFR 1.11 and 1.14. This collection is estimated to take 12 minutes to complete, including gathering, preparing, and submitting the completed application form to the USPTO. Time will vary depending upon the individual case. Any comments on the amount of time you require to complete this form and/or suggestions for reducing this burden, should be sent to the Chief Information Officer, U.S. Patent and Trademark Office, U.S. Department of Commerce, P.O. Box 1450, Alexandria, VA 22313-1450. DO NOT SEND FEES OR COMPLETED FORMS TO THIS ADDRESS. **SEND TO: Commissioner for Patents, P.O. Box 1450, Alexandria, VA 22313-1450.**

If you need assistance in completing the form, call 1-800-PTO-9199 and select option 2.

PTO/AIA/96 (08-12)
Approved for use through 01/31/2013. OMB 0651-0031
U.S. Patent and Trademark Office, U.S. DEPARTMENT OF COMMERCE
Under the Paperwork Reduction Act of 1995, no persons are required to respond to a collection of information unless it displays a valid OMB control number.

STATEMENT UNDER 37 CFR 3.73(c)

3. From: ORTHODISCOVERY GROUP LLC To: CROSSROADS EXTREMITY SYSTEMS, LLC

The document was recorded in the United States Patent and Trademark Office at
Reel 038491, Frame 0146, or for which a copy thereof is attached.

4. From: _____ To: _____

The document was recorded in the United States Patent and Trademark Office at
Reel _____, Frame _____, or for which a copy thereof is attached.

5. From: _____ To: _____

The document was recorded in the United States Patent and Trademark Office at
Reel _____, Frame _____, or for which a copy thereof is attached.

6. From: _____ To: _____

The document was recorded in the United States Patent and Trademark Office at
Reel _____, Frame _____, or for which a copy thereof is attached.

☐ Additional documents in the chain of title are listed on a supplemental sheet(s).

☐ As required by 37 CFR 3.73(c)(1)(i), the documentary evidence of the chain of title from the original owner to the assignee was, or concurrently is being, submitted for recordation pursuant to 37 CFR 3.11.

[NOTE: A separate copy (i.e., a true copy of the original assignment document(s)) must be submitted to Assignment Division in accordance with 37 CFR Part 3, to record the assignment in the records of the USPTO. See MPEP 302.08]

The undersigned (whose title is supplied below) is authorized to act on behalf of the assignee.

Signature: [signature] Date: 07/14/2016

Printed or Typed Name: Vernon Hartdegen Title or Registration Number: Senior V.P. of Operations

Privacy Act Statement

The **Privacy Act of 1974 (P.L. 93-579)** requires that you be given certain information in connection with your submission of the attached form related to a patent application or patent. Accordingly, pursuant to the requirements of the Act, please be advised that: (1) the general authority for the collection of this information is 35 U.S.C. 2(b)(2); (2) furnishing of the information solicited is voluntary; and (3) the principal purpose for which the information is used by the U.S. Patent and Trademark Office is to process and/or examine your submission related to a patent application or patent. If you do not furnish the requested information, the U.S. Patent and Trademark Office may not be able to process and/or examine your submission, which may result in termination of proceedings or abandonment of the application or expiration of the patent.

The information provided by you in this form will be subject to the following routine uses:

1. The information on this form will be treated confidentially to the extent allowed under the Freedom of Information Act (5 U.S.C. 552) and the Privacy Act (5 U.S.C 552a). Records from this system of records may be disclosed to the Department of Justice to determine whether disclosure of these records is required by the Freedom of Information Act.
2. A record from this system of records may be disclosed, as a routine use, in the course of presenting evidence to a court, magistrate, or administrative tribunal, including disclosures to opposing counsel in the course of settlement negotiations.
3. A record in this system of records may be disclosed, as a routine use, to a Member of Congress submitting a request involving an individual, to whom the record pertains, when the individual has requested assistance from the Member with respect to the subject matter of the record.
4. A record in this system of records may be disclosed, as a routine use, to a contractor of the Agency having need for the information in order to perform a contract. Recipients of information shall be required to comply with the requirements of the Privacy Act of 1974, as amended, pursuant to 5 U.S.C. 552a(m).
5. A record related to an International Application filed under the Patent Cooperation Treaty in this system of records may be disclosed, as a routine use, to the International Bureau of the World Intellectual Property Organization, pursuant to the Patent Cooperation Treaty.
6. A record in this system of records may be disclosed, as a routine use, to another federal agency for purposes of National Security review (35 U.S.C. 181) and for review pursuant to the Atomic Energy Act (42 U.S.C. 218(c)).
7. A record from this system of records may be disclosed, as a routine use, to the Administrator, General Services, or his/her designee, during an inspection of records conducted by GSA as part of that agency's responsibility to recommend improvements in records management practices and programs, under authority of 44 U.S.C. 2904 and 2906. Such disclosure shall be made in accordance with the GSA regulations governing inspection of records for this purpose, and any other relevant (*i.e.*, GSA or Commerce) directive. Such disclosure shall not be used to make determinations about individuals.
8. A record from this system of records may be disclosed, as a routine use, to the public after either publication of the application pursuant to 35 U.S.C. 122(b) or issuance of a patent pursuant to 35 U.S.C. 151. Further, a record may be disclosed, subject to the limitations of 37 CFR 1.14, as a routine use, to the public if the record was filed in an application which became abandoned or in which the proceedings were terminated and which application is referenced by either a published application, an application open to public inspection or an issued patent.
9. A record from this system of records may be disclosed, as a routine use, to a Federal, State, or local law enforcement agency, if the USPTO becomes aware of a violation or potential violation of law or regulation.

UNITED STATES PATENT AND TRADEMARK OFFICE

UNITED STATES DEPARTMENT OF COMMERCE
United States Patent and Trademark Office
Address: COMMISSIONER FOR PATENTS
P.O. Box 1450
Alexandria, Virginia 22313-1450
www.uspto.gov

APPLICATION NUMBER	FILING or 371(c) DATE	GRP ART UNIT	FIL FEE REC'D	ATTY.DOCKET.NO	TOT CLAIMS	IND CLAIMS
62/022,811	07/10/2014		130	117249-3		

CONFIRMATION NO. 6867

FILING RECEIPT

OC000000069731354

23526
Norris McLaughlin & Marcus, PA
721 Route 202-206
Suite 200
Bridgewater, NJ 08807

Date Mailed: 07/21/2014

Receipt is acknowledged of this provisional patent application. It will not be examined for patentability and will become abandoned not later than twelve months after its filing date. Any correspondence concerning the application must include the following identification information: the U.S. APPLICATION NUMBER, FILING DATE, NAME OF APPLICANT, and TITLE OF INVENTION. Fees transmitted by check or draft are subject to collection. Please verify the accuracy of the data presented on this receipt. **If an error is noted on this Filing Receipt, please submit a written request for a Filing Receipt Correction. Please provide a copy of this Filing Receipt with the changes noted thereon. If you received a "Notice to File Missing Parts" for this application, please submit any corrections to this Filing Receipt with your reply to the Notice. When the USPTO processes the reply to the Notice, the USPTO will generate another Filing Receipt incorporating the requested corrections**

Inventor(s)

Vernon R. Hartdegen, Collierville, TN;
Michael Chad Hollis, Collierville, TN;

Applicant(s)

Vernon R. Hartdegen, Collierville, TN;
Michael Chad Hollis, Collierville, TN;

Power of Attorney:
William Robinson--27224

Permission to Access - A proper **Authorization to Permit Access to Application by Participating Offices** (PTO/SB/39 or its equivalent) has been received by the USPTO.

If Required, Foreign Filing License Granted: 07/21/2014

The country code and number of your priority application, to be used for filing abroad under the Paris Convention, is **US 62/022,811**

Projected Publication Date: None, application is not eligible for pre-grant publication

Non-Publication Request: No

Early Publication Request: No
**** SMALL ENTITY ****
Title

Bone Implant and Means of Insertion

Statement under 37 CFR 1.55 or 1.78 for AIA (First Inventor to File) Transition Applications: No

PROTECTING YOUR INVENTION OUTSIDE THE UNITED STATES

Since the rights granted by a U.S. patent extend only throughout the territory of the United States and have no effect in a foreign country, an inventor who wishes patent protection in another country must apply for a patent in a specific country or in regional patent offices. Applicants may wish to consider the filing of an international application under the Patent Cooperation Treaty (PCT). An international (PCT) application generally has the same effect as a regular national patent application in each PCT-member country. The PCT process **simplifies** the filing of patent applications on the same invention in member countries, but **does not result** in a grant of "an international patent" and does not eliminate the need of applicants to file additional documents and fees in countries where patent protection is desired.

Almost every country has its own patent law, and a person desiring a patent in a particular country must make an application for patent in that country in accordance with its particular laws. Since the laws of many countries differ in various respects from the patent law of the United States, applicants are advised to seek guidance from specific foreign countries to ensure that patent rights are not lost prematurely.

Applicants also are advised that in the case of inventions made in the United States, the Director of the USPTO must issue a license before applicants can apply for a patent in a foreign country. The filing of a U.S. patent application serves as a request for a foreign filing license. The application's filing receipt contains further information and guidance as to the status of applicant's license for foreign filing.

Applicants may wish to consult the USPTO booklet, "General Information Concerning Patents" (specifically, the section entitled "Treaties and Foreign Patents") for more information on timeframes and deadlines for filing foreign patent applications. The guide is available either by contacting the USPTO Contact Center at 800-786-9199, or it can be viewed on the USPTO website at http://www.uspto.gov/web/offices/pac/doc/general/index.html.

For information on preventing theft of your intellectual property (patents, trademarks and copyrights), you may wish to consult the U.S. Government website, http://www.stopfakes.gov. Part of a Department of Commerce initiative, this website includes self-help "toolkits" giving innovators guidance on how to protect intellectual property in specific countries such as China, Korea and Mexico. For questions regarding patent enforcement issues, applicants may call the U.S. Government hotline at 1-866-999-HALT (1-866-999-4258).

LICENSE FOR FOREIGN FILING UNDER

Title 35, United States Code, Section 184

Title 37, Code of Federal Regulations, 5.11 & 5.15

GRANTED

The applicant has been granted a license under 35 U.S.C. 184, if the phrase "IF REQUIRED, FOREIGN FILING LICENSE GRANTED" followed by a date appears on this form. Such licenses are issued in all applications where the conditions for issuance of a license have been met, regardless of whether or not a license may be required as set forth in 37 CFR 5.15. The scope and limitations of this license are set forth in 37 CFR 5.15(a) unless an earlier license has been issued under 37 CFR 5.15(b). The license is subject to revocation upon written notification. The date indicated is the effective date of the license, unless an earlier license of similar scope has been granted under 37 CFR 5.13 or 5.14.

This license is to be retained by the licensee and may be used at any time on or after the effective date thereof unless it is revoked. This license is automatically transferred to any related applications(s) filed under 37 CFR 1.53(d). This license is not retroactive.

The grant of a license does not in any way lessen the responsibility of a licensee for the security of the subject matter as imposed by any Government contract or the provisions of existing laws relating to espionage and the national security or the export of technical data. Licensees should apprise themselves of current regulations especially with respect to certain countries, of other agencies, particularly the Office of Defense Trade Controls, Department of State (with respect to Arms, Munitions and Implements of War (22 CFR 121-128)); the Bureau of Industry and Security, Department of Commerce (15 CFR parts 730-774); the Office of Foreign AssetsControl, Department of Treasury (31 CFR Parts 500+) and the Department of Energy.

NOT GRANTED

No license under 35 U.S.C. 184 has been granted at this time, if the phrase "IF REQUIRED, FOREIGN FILING LICENSE GRANTED" DOES NOT appear on this form. Applicant may still petition for a license under 37 CFR 5.12, if a license is desired before the expiration of 6 months from the filing date of the application. If 6 months has lapsed from the filing date of this application and the licensee has not received any indication of a secrecy order under 35 U.S.C. 181, the licensee may foreign file the application pursuant to 37 CFR 5.15(b).

SelectUSA

The United States represents the largest, most dynamic marketplace in the world and is an unparalleled location for business investment, innovation, and commercialization of new technologies. The U.S. offers tremendous resources and advantages for those who invest and manufacture goods here. Through SelectUSA, our nation works to promote and facilitate business investment. SelectUSA provides information assistance to the international investor community; serves as an ombudsman for existing and potential investors; advocates on behalf of U.S. cities, states, and regions competing for global investment; and counsels U.S. economic development organizations on investment attraction best practices. To learn more about why the United States is the best country in the world to develop technology, manufacture products, deliver services, and grow your business, visit http://www.SelectUSA.gov or call +1-202-482-6800.

PTO/SB/16 (03-13)
Approved for use through 01/31/2014. OMB 0651-0032
U.S. Patent and Trademark Office; U.S. DEPARTMENT OF COMMERCE
Under the Paperwork Reduction Act of 1995 no persons are required to respond to a collection of information unless it displays a valid OMB control number

PROVISIONAL APPLICATION FOR PATENT COVER SHEET – Page 1 of 2

This is a request for filing a PROVISIONAL APPLICATION FOR PATENT under 37 CFR 1.53(c).

Express Mail Label No. .....

INVENTOR(S)

Given Name (first and middle [if any])	Family Name or Surname	Residence (City and either State or Foreign Country)
Vernon R.	Hartdegen	Collierville, TN
Michael Chad	Hollis	Collierville, TN

Additional inventors are being named on the ..... separately numbered sheets attached hereto.

TITLE OF THE INVENTION (500 characters max):

Bone Implant and Means of Insertion

Direct all correspondence to: **CORRESPONDENCE ADDRESS**

☑ The address corresponding to Customer Number: 23526

OR

☐ Firm or Individual Name

Address

City	State	Zip
Country	Telephone	Email

ENCLOSED APPLICATION PARTS (*check all that apply*)

☑ Application Data Sheet. See 37 CFR 1.76.

☑ Drawing(s) *Number of Sheets* 20

☑ Specification (e.g., description of the invention) *Number of Pages* 17

☐ CD(s), Number of CDs .....

☐ Other (specify) .....

Fees Due: Filing Fee of $260 ($130 for small entity) ($65 for micro entity). If the specification and drawings exceed 100 sheets of paper, an application size fee is also due, which is $400 ($200 for small entity) ($100 for micro entity) for each additional 50 sheets or fraction thereof. See 35 U.S.C. 41(a)(1)(G) and 37 CFR 1.16(s).

METHOD OF PAYMENT OF THE FILING FEE AND APPLICATION SIZE FEE FOR THIS PROVISIONAL APPLICATION FOR PATENT

☑ Applicant asserts small entity status. See 37 CFR 1.27.

☐ Applicant certifies micro entity status. See 37 CFR 1.29.
Applicant must attach form PTO/SB/15A or B or equivalent.

☐ A check or money order made payable to the *Director of the United States Patent and Trademark Office* is enclosed to cover the filing fee and application size fee (if applicable).

☐ Payment by credit card. Form PTO-2038 is attached.

☑ The Director is hereby authorized to charge the filing fee and application size fee (if applicable) or credit any overpayment to Deposit Account Number: 14-1283.

$130.00

TOTAL FEE AMOUNT ($)

USE ONLY FOR FILING A PROVISIONAL APPLICATION FOR PATENT

This collection of information is required by 37 CFR 1.51. The information is required to obtain or retain a benefit by the public which is to file (and by the USPTO to process) an application. Confidentiality is governed by 35 U.S.C. 122 and 37 CFR 1.11 and 1.14. This collection is estimated to take 10 hours to complete, including gathering, preparing, and submitting the completed application form to the USPTO. Time will vary depending upon the individual case. Any comments on the amount of time you require to complete this form and/or suggestions for reducing this burden, should be sent to the Chief Information Officer, U.S. Patent and Trademark Office, U.S. Department of Commerce, P.O. Box 1450, Alexandria, VA 22313-1450. DO NOT SEND FEES OR COMPLETED FORMS TO THIS ADDRESS. **SEND TO: Commissioner for Patents, P.O. Box 1450, Alexandria, VA 22313-1450.**

If you need assistance in completing the form, call 1-800-PTO-9199 and select option 2.

PTO/SB/16 (03-13)
Approved for use through 01/31/2014. OMB 0651-0032
U.S. Patent and Trademark Office; U.S. DEPARTMENT OF COMMERCE
Under the Paperwork Reduction Act of 1995 no persons are required to respond to a collection of information unless it displays a valid OMB control number

PROVISIONAL APPLICATION FOR PATENT COVER SHEET -- Page 2 of 2

The invention was made by an agency of the United States Government or under a contract with an agency of the United States Government.

- [x] No.
- [ ] Yes, the invention was made by an agency of the U.S. Government. The U.S. Government agency name is: .....
- [ ] Yes, the invention was made under a contract with an agency of the U.S. Government. The name of the U.S. Government agency and Government contract number are: .....

WARNING:

Petitioner/applicant is cautioned to avoid submitting personal information in documents filed in a patent application that may contribute to identity theft. Personal information such as social security numbers, bank account numbers, or credit card numbers (other than a check or credit card authorization form PTO-2038 submitted for payment purposes) is never required by the USPTO to support a petition or an application. If this type of personal information is included in documents submitted to the USPTO, petitioners/applicants should consider redacting such personal information from the documents before submitting them to the USPTO. Petitioner/applicant is advised that the record of a patent application is available to the public after publication of the application (unless a non-publication request in compliance with 37 CFR 1.213(a) is made in the application) or issuance of a patent. Furthermore, the record from an abandoned application may also be available to the public if the application is referenced in a published application or an issued patent (see 37 CFR 1.14). Checks and credit card authorization forms PTO-2038 submitted for payment purposes are not retained in the application file and therefore are not publicly available.

SIGNATURE ..... DATE July 10, 2013

TYPED OR PRINTED NAME William R. Robinson REGISTRATION NO. 27,224 (*if appropriate*)

TELEPHONE 908-722-0700 DOCKET NUMBER 117249-3

PTO/AIA/14 (12-13)
Approved for use through 01/31/2014. OMB 0651-0032
U.S. Patent and Trademark Office; U.S. DEPARTMENT OF COMMERCE

Under the Paperwork Reduction Act of 1995, no persons are required to respond to a collection of information unless it contains a valid OMB control number.

Application Data Sheet 37 CFR 1.76	Attorney Docket Number	117249-3
	Application Number	

Title of Invention	Bone Implant and Means of Insertion

The application data sheet is part of the provisional or nonprovisional application for which it is being submitted. The following form contains the bibliographic data arranged in a format specified by the United States Patent and Trademark Office as outlined in 37 CFR 1.76.
This document may be completed electronically and submitted to the Office in electronic format using the Electronic Filing System (EFS) or the document may be printed and included in a paper filed application.

Secrecy Order 37 CFR 5.2

☐ Portions or all of the application associated with this Application Data Sheet may fall under a Secrecy Order pursuant to 37 CFR 5.2 (Paper filers only. Applications that fall under Secrecy Order may not be filed electronically.)

Inventor Information:

Inventor 1 Remove

Legal Name

Prefix	Given Name	Middle Name	Family Name	Suffix
	Vernon	R.	Hartdegen	

Residence Information (Select One) ◉ US Residency ◯ Non US Residency ◯ Active US Military Service

City	Collierville	State/Province	TN	Country of Residence	US

Mailing Address of Inventor:

Address 1	1284 Grey Wolf Drive		
Address 2			
City	Collierville	State/Province	TN
Postal Code	38017	Country i	US

Inventor 2 Remove

Legal Name

Prefix	Given Name	Middle Name	Family Name	Suffix
	Michael	Chad	Hollis	

Residence Information (Select One) ◉ US Residency ◯ Non US Residency ◯ Active US Military Service

City	Collierville	State/Province	TN	Country of Residence	US

Mailing Address of Inventor:

Address 1	10278 Willow Reade Cove		
Address 2			
City	Collierville	State/Province	TN
Postal Code	38017	Country i	US

All Inventors Must Be Listed - Additional Inventor Information blocks may be generated within this form by selecting the **Add** button. Add

Correspondence Information:

Enter either Customer Number or complete the Correspondence Information section below.
For further information see 37 CFR 1.33(a).

PTO/AIA/14 (12-13)
Approved for use through 01/31/2014. OMB 0651-0032
U.S. Patent and Trademark Office; U.S. DEPARTMENT OF COMMERCE
Under the Paperwork Reduction Act of 1995, no persons are required to respond to a collection of information unless it contains a valid OMB control number.

Application Data Sheet 37 CFR 1.76	Attorney Docket Number	117249-3
	Application Number	
Title of Invention	Bone Implant and Means of Insertion	

☐ **An Address is being provided for the correspondence information of this application.**

Customer Number	23526		
Email Address	wrrobinson@nmmlaw.com	Add Email	Remove Email

Application Information:

Title of the Invention	Bone Implant and Means of Insertion		
Attorney Docket Number	117249-3	**Small Entity Status Claimed**	☒
Application Type	Provisional		
Subject Matter	Utility		
Total Number of Drawing Sheets (if any)	20	**Suggested Figure for Publication (if any)**	2d

Filing By Reference :

Only complete this section when filing an application by reference under 35 U.S.C. 111(c) and 37 CFR 1.57 (a). Do not complete this section if application papers including a specification and any drawings are being filed. Any domestic benefit or foreign priority information must be provided in the appropriate section(s) below (i.e., "Domestic Benefit/National Stage Information" and "Foreign Priority Information").

For the purposes of a filing date under 37 CFR 1.53(b), the description and any drawings of the present application are replaced by this reference to the previously filed application, subject to conditions and

Application number of the previously filed application	Filing date (YYYY-MM-DD)	Intellectual Property Authority or Country

Publication Information:

☐ Request Early Publication (Fee required at time of Request 37 CFR 1.219)

☐ **Request Not to Publish.** I hereby request that the attached application not be published under 35 U.S.C. 122(b) and certify that the invention disclosed in the attached application **has not and will not** be the subject of an application filed in another country, or under a multilateral international agreement, that requires publication at eighteen months after filing.

Representative Information:

Representative Information should be provided for all practitioners having a power of attorney in the application. Providing this information in the Application Data Sheet does not constitute a power of attorney in the application (see 37 CFR 1.32). Either enter Customer Number or complete the Representative Name section below. If both sections are completed the customer Number will be used for the Representative Information during processing.

Please Select One:	◉ Customer Number	○ US Patent Practitioner	○ Limited Recognition (37 CFR 11.9)
Customer Number			

PTO/AIA/14 (12-13)
Approved for use through 01/31/2014. OMB 0651-0032
U.S. Patent and Trademark Office; U.S. DEPARTMENT OF COMMERCE
Under the Paperwork Reduction Act of 1995, no persons are required to respond to a collection of information unless it contains a valid OMB control number.

Application Data Sheet 37 CFR 1.76	Attorney Docket Number	117249-3
	Application Number	
Title of Invention	Bone Implant and Means of Insertion	

Domestic Benefit/National Stage Information:

This section allows for the applicant to either claim benefit under 35 U.S.C. 119(e), 120, 121, or 365(c) or indicate National Stage entry from a PCT application. Providing this information in the application data sheet constitutes the specific reference required by 35 U.S.C. 119(e) or 120, and 37 CFR 1.78.
When referring to the current application, please leave the application number blank.

Prior Application Status			Remove
Application Number	Continuity Type	Prior Application Number	Filing Date (YYYY-MM-DD)

Additional Domestic Benefit/National Stage Data may be generated within this form by selecting the **Add**button.

Foreign Priority Information:

This section allows for the applicant to claim priority to a foreign application. Providing this information in the application data sheet constitutes the claim for priority as required by 35 U.S.C. 119(b) and 37 CFR 1.55(d). When priority is claimed to a foreign application that is eligible for retrieval under the priority document exchange program (PDX) the information will be used by the Office to automatically attempt retrieval pursuant to 37 CFR 1.55(h)(1) and (2). Under the PDX program, applicant bears the ultimate responsibility for ensuring that a copy of the foreign application is received by the Office from the participating foreign intellectual property office, or a certified copy of the foreign priority application is filed, within the time period specified in 37 CFR 1.55(g)(1).

			Remove
Application Number	Country[i]	Filing Date (YYYY-MM-DD)	Access Code[j] (if applicable)

Additional Foreign Priority Data may be generated within this form by selecting the **Add**button.

Statement under 37 CFR 1.55 or 1.78 for AIA (First Inventor to File) Transition Applications

☐ This application (1) claims priority to or the benefit of an application filed before March 16, 2013 and (2) also contains, or contained at any time, a claim to a claimed invention that has an effective filing date on or after March 16, 2013.
NOTE: By providing this statement under 37 CFR 1.55 or 1.78, this application, with a filing date on or after March 16, 2013, will be examined under the first inventor to file provisions of the AIA.

PTO/AIA/14 (12-13)
Approved for use through 01/31/2014. OMB 0651-0032
U.S. Patent and Trademark Office; U.S. DEPARTMENT OF COMMERCE
Under the Paperwork Reduction Act of 1995, no persons are required to respond to a collection of information unless it contains a valid OMB control number.

Application Data Sheet 37 CFR 1.76	Attorney Docket Number	117249-3
	Application Number	
Title of Invention	Bone Implant and Means of Insertion	

Authorization to Permit Access:

[x] Authorization to Permit Access to the Instant Application by the Participating Offices

If checked, the undersigned hereby grants the USPTO authority to provide the European Patent Office (EPO), the Japan Patent Office (JPO), the Korean Intellectual Property Office (KIPO), the World Intellectual Property Office (WIPO), and any other intellectual property offices in which a foreign application claiming priority to the instant patent application is filed access to the instant patent application. See 37 CFR 1.14(c) and (h). This box should not be checked if the applicant does not wish the EPO, JPO, KIPO, WIPO, or other intellectual property office in which a foreign application claiming priority to the instant patent application is filed to have access to the instant patent application.

In accordance with 37 CFR 1.14(h)(3), access will be provided to a copy of the instant patent application with respect to: 1) the instant patent application-as-filed; 2) any foreign application to which the instant patent application claims priority under 35 U.S.C. 119(a)-(d) if a copy of the foreign application that satisfies the certified copy requirement of 37 CFR 1.55 has been filed in the instant patent application; and 3) any U.S. application-as-filed from which benefit is sought in the instant patent application.
In accordance with 37 CFR 1.14(c), access may be provided to information concerning the date of filing this Authorization.

Applicant Information:

Providing assignment information in this section does not substitute for compliance with any requirement of part 3 of Title 37 of CFR to have an assignment recorded by the Office.

Applicant 1

If the applicant is the inventor (or the remaining joint inventor or inventors under 37 CFR 1.45), this section should not be completed. The information to be provided in this section is the name and address of the legal representative who is the applicant under 37 CFR 1.43; or the name and address of the assignee, person to whom the inventor is under an obligation to assign the invention, or person who otherwise shows sufficient proprietary interest in the matter who is the applicant under 37 CFR 1.46. If the applicant is an applicant under 37 CFR 1.46 (assignee, person to whom the inventor is obligated to assign, or person who otherwise shows sufficient proprietary interest) together with one or more joint inventors, then the joint inventor or inventors who are also the applicant should be identified in this section.

Clear

○ **Assignee** ○ Legal Representative under 35 U.S.C. 117 ○ Joint Inventor

○ **Person to whom the inventor is obligated to assign.** ○ Person who shows sufficient proprietary interest

If applicant is the legal representative, indicate the authority to file the patent application, the inventor is:

Name of the Deceased or Legally Incapacitated Inventor :

If the Applicant is an Organization check here. ☐

Prefix	Given Name	Middle Name	Family Name	Suffix

Under the Paperwork Reduction Act of 1995, no persons are required to respond to a collection of information unless it contains a valid OMB control number.

Application Data Sheet 37 CFR 1.76	Attorney Docket Number	117249-3
	Application Number	
Title of Invention	Bone Implant and Means of Insertion	

Mailing Address Information For Applicant:			
Address 1			
Address 2			
City		**State/Province**	
Country		Postal Code	
Phone Number		Fax Number	
Email Address			

Additional Applicant Data may be generated within this form by selecting the Add button.

Assignee Information including Non-Applicant Assignee Information:

Providing assignment information in this section does not subsitute for compliance with any requirement of part 3 of Title 37 of CFR to have an assignment recorded by the Office.

Assignee 1

Complete this section if assignee information, including non-applicant assignee information, is desired to be included on the patent application publication . An assignee-applicant identified in the "Applicant Information" section will appear on the patent application publication as an applicant. For an assignee-applicant, complete this section only if identification as an assignee is also desired on the patent application publication.

If the Assignee or Non-Applicant Assignee is an Organization check here. ☒

Organization Name	OrthoDiscovery Group LLC

Mailing Address Information For Assignee including Non-Applicant Assignee:			
Address 1	132 Cotton Ridge Cove		
Address 2			
City	Cordova	**State/Province**	TN
Country	US	Postal Code	38018
Phone Number		Fax Number	
Email Address			

Additional Assignee or Non-Applicant Assignee Data may be generated within this form by selecting the Add button.

PTO/AIA/14 (12-13)
Approved for use through 01/31/2014. OMB 0651-0032
U.S. Patent and Trademark Office; U.S. DEPARTMENT OF COMMERCE
Under the Paperwork Reduction Act of 1995, no persons are required to respond to a collection of information unless it contains a valid OMB control number.

Application Data Sheet 37 CFR 1.76	Attorney Docket Number	117249-3
	Application Number	
Title of Invention	Bone Implant and Means of Insertion	

Signature:

NOTE: This form must be signed in accordance with 37 CFR 1.33. See 37 CFR 1.4 for signature requirements and certifications.

Signature				Date (YYYY-MM-DD)	2014-07-10
First Name	William	Last Name	Robinson	Registration Number	27224

Additional Signature may be generated within this form by selecting the Add button.

This collection of information is required by 37 CFR 1.76. The information is required to obtain or retain a benefit by the public which is to file (and by the USPTO to process) an application. Confidentiality is governed by 35 U.S.C. 122 and 37 CFR 1.14. This collection is estimated to take 23 minutes to complete, including gathering, preparing, and submitting the completed application data sheet form to the USPTO. Time will vary depending upon the individual case. Any comments on the amount of time you require to complete this form and/or suggestions for reducing this burden, should be sent to the Chief Information Officer, U.S. Patent and Trademark Office, U.S. Department of Commerce, P.O. Box 1450, Alexandria, VA 22313-1450. DO NOT SEND FEES OR COMPLETED FORMS TO THIS ADDRESS. **SEND TO: Commissioner for Patents, P.O. Box 1450, Alexandria, VA 22313-1450.**

Electronic Patent Application Fee Transmittal

Application Number:	
Filing Date:	
Title of Invention:	Bone Implant and Means of Insertion
First Named Inventor/Applicant Name:	Vernon R. Hartdegen
Filer:	William R. Robinson/Carolyn Perry
Attorney Docket Number:	117249-3

Filed as Small Entity

Provisional Filing Fees

Description	Fee Code	Quantity	Amount	Sub-Total in USD($)
Basic Filing:				
Provisional Application Filing Fee	2005	1	130	130
Pages:				
Claims:				
Miscellaneous-Filing:				
Petition:				
Patent-Appeals-and-Interference:				
Post-Allowance-and-Post-Issuance:				
Extension-of-Time:				

Description	Fee Code	Quantity	Amount	Sub-Total in USD($)
Miscellaneous:				
			Total in USD ($)	**130**

Electronic Acknowledgement Receipt

EFS ID:	19542318
Application Number:	62022811
International Application Number:	
Confirmation Number:	6867
Title of Invention:	Bone Implant and Means of Insertion
First Named Inventor/Applicant Name:	Vernon R. Hartdegen
Customer Number:	23526
Filer:	William R. Robinson/Carolyn Perry
Filer Authorized By:	William R. Robinson
Attorney Docket Number:	117249-3
Receipt Date:	10-JUL-2014
Filing Date:	
Time Stamp:	13:30:13
Application Type:	Provisional

Payment information:

Submitted with Payment	yes
Payment Type	Deposit Account
Payment was successfully received in RAM	$130
RAM confirmation Number	9222
Deposit Account	141263
Authorized User	

The Director of the USPTO is hereby authorized to charge indicated fees and credit any overpayment as follows:

Charge any Additional Fees required under 37 C.F.R. Section 1.17 (Patent application and reexamination processing fees)

Charge any Additional Fees required under 37 C.F.R. Section 1.21 (Miscellaneous fees and charges)

File Listing:

Document Number	Document Description	File Name	File Size(Bytes)/ Message Digest	Multi Part /.zip	Pages (if appl.)
1		ProvApplication07-10-14.pdf	2226093 c48303f1ab1f63bdcfdeb042add886e45cfd1910	yes	45

Multipart Description/PDF files in .zip description

Document Description	Start	End
Transmittal of New Application	1	2
Application Data Sheet	3	8
Specification	9	24
Claims	25	25
Drawings-only black and white line drawings	26	45

Warnings:

Information:

2	Fee Worksheet (SB06)	fee-info.pdf	29398 f9f8ede3a48c6c26ee1bdf4b8ac199b02da8add2	no	2

Warnings:

Information:

Total Files Size (in bytes):	2255491

This Acknowledgement Receipt evidences receipt on the noted date by the USPTO of the indicated documents, characterized by the applicant, and including page counts, where applicable. It serves as evidence of receipt similar to a Post Card, as described in MPEP 503.

<u>New Applications Under 35 U.S.C. 111</u>
If a new application is being filed and the application includes the necessary components for a filing date (see 37 CFR 1.53(b)-(d) and MPEP 506), a Filing Receipt (37 CFR 1.54) will be issued in due course and the date shown on this Acknowledgement Receipt will establish the filing date of the application.

<u>National Stage of an International Application under 35 U.S.C. 371</u>
If a timely submission to enter the national stage of an international application is compliant with the conditions of 35 U.S.C. 371 and other applicable requirements a Form PCT/DO/EO/903 indicating acceptance of the application as a national stage submission under 35 U.S.C. 371 will be issued in addition to the Filing Receipt, in due course.

<u>New International Application Filed with the USPTO as a Receiving Office</u>
If a new international application is being filed and the international application includes the necessary components for an international filing date (see PCT Article 11 and MPEP 1810), a Notification of the International Application Number and of the International Filing Date (Form PCT/RO/105) will be issued in due course, subject to prescriptions concerning national security, and the date shown on this Acknowledgement Receipt will establish the international filing date of the application.