Trials@uspto.gov
571.272.7822

Paper 33
Date: May 14, 2020

UNITED STATES PATENT AND TRADEMARK OFFICE

BEFORE THE PATENT TRIAL AND APPEAL BOARD

SZ DJI TECHNOLOGY CO., LTD.,
Petitioner,

v.

AUTEL ROBOTICS USA LLC,
Patent Owner.

PGR2019-00014
Patent 9,979,000 B2

Before ERICA A. FRANKLIN, JENNIFER MEYER CHAGNON, and AVELYN M. ROSS, *Administrative Patent Judges*.

FRANKLIN, *Administrative Patent Judge*.

JUDGMENT
Final Written Decision
Determining All Challenged Claims Unpatentable
35 U.S.C. § 328(a)

I. INTRODUCTION

This is a Final Written Decision in a post-grant review of claims 1–12 of U.S. Patent No. 9,979,000 B2, Ex. 1001 ("the '000 patent"). We have jurisdiction under 35 U.S.C. § 6, and enter this Decision pursuant to 35 U.S.C. § 328(a) and 37 C.F.R. § 42.3. For the reasons set forth below, we determine that SZ DJI Technology Co., Ltd. ("Petitioner") has shown, by a preponderance of the evidence, that the challenged claims are unpatentable. *See* 35 U.S.C. § 326(e) (2018).

A. Procedural History

Petitioner filed a Petition requesting post-grant review of claims 1–12 of the '000 patent. Paper 8 (Corrected Petition, "Pet."). Autel Robotics USA LLC ("Patent Owner") did not file a Preliminary Response to the Petition. On May 22, 2019, pursuant to 35 U.S.C. § 324(a), we instituted trial to determine whether the challenged claims are unpatentable on the grounds raised in the Petition. Paper 9 ("Dec."). Patent Owner filed a Patent Owner's Response on August 27, 2019. Paper 18 ("PO Resp."). Petitioner filed a Reply to the Patent Owner's Response on November 22, 2019. Paper 23 ("Pet. Reply"). Patent Owner filed a Sur-Reply on December 30, 2019. Paper 24 ("PO Sur-Reply").

On February 20, 2020, the parties presented arguments at an oral hearing. Paper 27. The transcript of the oral hearing has been entered in the record. Paper 32 ("Tr.").

B. Real Parties in Interest

Petitioner identifies its real parties in interest as SZ DJI Technology Co., Ltd., DJI Europe B.V., DJI Technology, Inc., iFlight Technology Company Limited, DJI Japan K.K., and DJI Research LLC. Pet. 1. Patent

Owner identifies its real party in interest as Autel Robotics USA LLC. Paper 4, 2.

C. Related Matters

The parties provide notice of the following matter involving the ’000 patent before the U.S. International Trade Commission: *Certain Unmanned Aerial Vehicles and Components Thereof*, 337-TA-1133 (ITC). Pet. 2; Paper 4, 2. Petitioner provides notice of the following district court proceeding involving the ’000 patent: “*SZ DJI Technology Co. Ltd., et al. v. Autel Robotics USA LLC, et al.,* DED-1-16-cv-00706.” Pet. 2. Patent Owner refers to the district court proceeding as: “*SZ DJI Tech. Co Ltd. et al. v. Autel Robotics USA LLC et al.*, C.A. No. 16-706-LPS-CJB (consolidated) (D. Del.).” Paper 29, 2. The parties note also that an application related to the ’000 patent, U.S. Patent Application 15/598,914, is pending before the Office. Pet. 2, Paper 4, 2. We note that application later issued as U.S. Patent No. 10,224,526, on March 5, 2019.

D. The ’000 Patent

1. Eligibility for Post-Grant Review

Post-grant review is available only for patents “described in section 3(n)(1)” of the Leahy-Smith America Invents Act (“AIA”), Pub L. No. 112-29, 125 Stat. 284 (2011). AIA § 6(f)(2)(A) (2011). Those are patents that issue from applications “that contain[] or contained at any time . . . a claim to a claimed invention that has an effective filing date in section 100(i) of title 35, United States Code, that is on or after” “the expiration of the 18-month period beginning on the date of the enactment of” the AIA. *See* AIA § 3(n)(1). The AIA was enacted on September 16, 2011, therefore, post-grant review is available only for patents that, at any point,

contained at least one claim with an effective filing date, as defined by 35 U.S.C. § 100(i), on or after March 16, 2013.

The earliest possible filing date for the ’000 patent is December 14, 2015, which falls after the March 16, 2013 date. *See* Ex. 1001, 1:10–13; *see also* Pet. 3 (asserting that the earliest possible priority date of the ’000 patent is December 14, 2015); PO Resp. 2 (asserting that the ’000 patent claims a priority date of December 14, 2015).

The AIA also requires the petition for post-grant review to be filed within nine months of the issue date of the challenged patent. 35 U.S.C. § 321(c) (2018). The ’000 patent issued on May 22, 2018. Ex. 1001, code (45). The Petition has been accorded a filing date of November 11, 2018, Papers 6, 7 (correcting the date accorded), which is within the nine-month window. Thus, Petitioner has timely filed the Petition.

Accordingly, we determine that the ’000 patent is eligible for post-grant review.

2. Patent Specification

The ’000 patent describes an unmanned aerial vehicle and, particularly, a battery used for the vehicle. Ex. 1001, 1:18–20. The Specification explains that “[i]n prior arts, a main body of the unmanned vehicle offers a cavity for accommodating the power of the unmanned aerial vehicle, such as a lithium battery.” *Id.* at 1:39–41. A sealing board set in an opening of the cavity of the unmanned vehicle would be employed to fasten the battery, thereby preventing it from dropping from the cavity during flight. *Id.* at 1:42–44. “The sealing board is usually fixed to the main body of the unmanned aerial vehicle by screws, bolts or other fasteners.” *Id.* at 1:45–46. Those screws, bolts, or fasteners would need to be loosened before

changing the battery, and then tightened after changing the battery, thus making it inconvenient to change a battery. *Id.* at 1:47–50.

The Specification explains that the present invention seeks to overcome defects that cause the inconvenience in changing the battery. *Id.* at 1:54–57. In particular, the Specification states that "because a clamp button is configured on one end of the shell, the battery is capable of detachably connecting with the main body of the unmanned aerial vehicle which makes the changing of the battery [] more convenient." *Id.* at 2:44–47. Additionally, "the inner side of the clamp button is configured [with] a restorable elastic piece for realizing the clamp button returning back to [its] original place automatically." *Id.* at 2:48–51.

Figure 1 of the '000 patent is reproduced below:

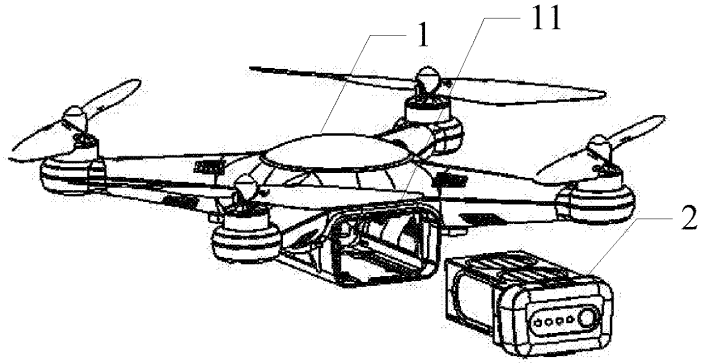

Fig.1

Figure 1 depicts a disassembled structure diagram of an unmanned aerial vehicle ("UAV") in an embodiment of the invention. *Id.* at 2:62–64. The vehicle includes UAV main body 1 and UAV battery 2, shown removed and away from the UAV opening of battery compartment 11. *Id.* at 3:35–37, 4:53–56.

Figure 2 of the ’000 patent is reproduced below:

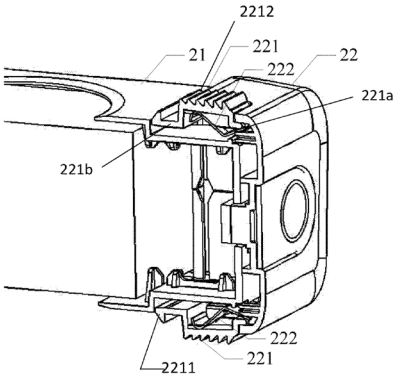

Fig.2

Figure 2 depicts a diagram of a battery used for an unmanned aerial vehicle in an embodiment of the invention. *Id.* at 2:65–67. The battery includes battery body 21 and shell 22 disposed on one end of the battery body. *Id.* at 3:43–46. Clamp button 221 is configured on a side of the shell, opposite the UAV. *Id.* at 3:45–46. One end 221a of the clamp button is fixed to the shell, and the other end 221b of the clamp button is used to detachably connect the UAV. *Id.* at 3:46–49. End 221b of the clamp button has hook 2211 for detachably hanging on the UAV. *Id.* at 3:50–52.

Anti-slip structure 2212 is configured on the outer surface of the clamp button to increase “touching friction” of the clamp button and to prevent slipping upon touching by a user. *Id.* at 3:61–66. Restorable elastic piece 222 is disposed on an inner side of the clamp button, wherein one end of the piece connects to the shell and the other end abuts the clamp button. *Id.* at 4:5–10. The battery’s restorable elastic piece is “for realizing the clamp button 221 returning to [its] original position automatically.” *Id.* at 4:1–4.

E. Illustrative Claim

Petitioner challenges claims 1–12. Claim 1, the only independent claim, is illustrative and reads as follows:

> 1. A multi-rotor unmanned aerial vehicle, comprising:
> a main body comprising a battery compartment;
> four arms, wherein each arm is coupled to the main body;
> a propulsion assembly disposed on the each arm, wherein the propulsion assembly comprises a propeller and a motor, the motor being configured to drive the propeller to rotate in order to generate lift force;
> a battery accommodated in the battery compartment, and the battery comprising a shell and a battery body disposed in the shell;
> a clamp button disposed on the shell, wherein one end of the clamp button is mounted on the shell and the other end of the clamp button is detachably coupled to the main body; and
> a restorable elastic piece disposed on an inner side of the clamp button;
> wherein one end of the restorable elastic piece is disposed on the shell and the other end of the restorable elastic piece is fixed with the clamp button:
> wherein the battery compartment comprises a clamping portion configured to detachably connect to the clamp button;
> wherein the clamp button is configured to cause the restorable elastic piece to be pressed down in a first state where the battery is not completely pushed into the battery compartment or is only partially positioned in the battery compartment;
> wherein in a second state where the battery is completely pushed or positioned into the battery compartment, the restorable elastic piece is configured to automatically rebound so that (a) the clamp button is able to return back to its original place and (b) the battery is able to be stuck by the cooperation of the clamping portion and the clamp button.

Ex. 1001, 5:35–6:16.

F. Prior Art and Asserted Grounds

We instituted review of claims 1–12 of the ’000 patent on the following asserted grounds:

Claims Challenged	35 U.S.C. §	References/Basis
1–12	103	Phantom 2 Manual,[1] Kondo[2]
1–9, 12	103	Saika,[3] Ichiba[4]
10, 11	103	Saika, Ichiba, Phelps[5]
1–12	112(b)	Indefiniteness

Petitioner also relies on the Corrected Declaration (Ex. 1003) and Reply Declaration (Ex. 1049) of Juan J. Alonso, Ph.D. Patent Owner relies upon the Declaration of Charles F. Reinholtz (Ex. 2001).

II. ANALYSIS

A. Legal Standards

We analyze the asserted grounds of unpatentability in accordance with the following principles.

---

[1] Phantom 2 Vision+ User Manual (EN) v. 1.4, Aug. 15, 2014 (Ex. 1029) (“Phantom 2 Manual”).
[2] Kondo et al., U.S. Patent 5,769,657, issued June 23, 1998 (Ex. 1008) (“Kondo”).
[3] Saika et al., US 2017/0001721, published Jan. 5, 2017 (Ex. 1006) (“Saika”).
[4] Ichiba, JP 2007-123082, published May 17, 2007 (Ex. 1009), English Translation (Ex. 1010) (“Ichiba”).
[5] Phelps et al., U.S. Patent 6,136,467, issued Oct. 24, 2000 (Ex. 1011) (“Phelps”).

1. Obviousness

As set forth in 35 U.S.C. § 103,

> [a] patent for a claimed invention may not be obtained . . . if the differences between the claimed invention and the prior art are such that the claimed invention as a whole would have been obvious before the effective filing date of the claimed invention to a person having ordinary skill in the art to which the claimed invention pertains.

35 U.S.C. § 103 (2018). The question of obviousness is resolved on the basis of underlying factual determinations, including: (1) the scope and content of the prior art; (2) any differences between the claimed subject matter and the prior art; (3) the level of ordinary skill in the art; and (4) if in the record, objective evidence of nonobviousness. *Graham v. John Deere Co.*, 383 U.S. 1, 17–18 (1966). Consideration of the *Graham* factors "helps inform the ultimate obviousness determination." *Apple Inc. v. Samsung Elecs. Co.*, 839 F.3d 1034, 1048 (Fed. Cir. 2016) (en banc).

"An obviousness determination requires finding both 'that a skilled artisan would have been motivated to combine the teachings of the prior art references to achieve the claimed invention, and that the skilled artisan would have had a reasonable expectation of success in doing so.'" *CRFD Research, Inc. v. Matal*, 876 F.3d 1330, 1340 (Fed. Cir. 2017) (quoting *Intelligent Bio-Sys., Inc. v. Illumina Cambridge Ltd.*, 821 F.3d 1359, 1367–1368 (Fed. Cir. 2016)). "The reasonable expectation of success requirement refers to the likelihood of success in combining references to meet the limitations of the claimed invention." *Intelligent Bio-Sys.*, 821 F.3d at 1367.

2. Indefiniteness

"The specification [of a patent] shall conclude with one or more claims particularly pointing out and distinctly claiming the subject matter

which the inventor or a joint inventor regards as the invention." 35 U.S.C. § 112(b) (2012). "[A] patent is invalid for indefiniteness if its claims, read in light of the specification . . . and the prosecution history, fail to inform, with reasonable certainty, those skilled in the art about the scope of the invention." *Nautilus, Inc. v. Biosig Instruments, Inc.*, 134 S. Ct. 2120, 2124 (2014); *In re Packard*, 751 F.3d 1307, 1311 (Fed. Cir. 2014) (holding a claim is indefinite when it contains words or phrases whose meaning is "unclear in describing and defining the claimed invention").

B. Level of Ordinary Skill in the Art

The level of skill in the art is a factual determination that provides a primary guarantee of objectivity in an obviousness analysis. *Al-Site Corp. v. VSI Int'l Inc.*, 174 F.3d 1308, 1324 (Fed. Cir. 1999) (citing *Graham*, 383 U.S. at 17–18; *Ryko Mfg. Co. v. Nu-Star, Inc.*, 950 F.2d 714, 718 (Fed. Cir. 1991)).

Petitioner describes a person having ordinary skill in the art as follows:

> A person of ordinary skill in the art [] at the time of the alleged invention would have had the equivalent of a bachelor's degree from an accredited institution in aeronautical engineering, electrical engineering, mechanical engineering, or the equivalent and at least two years of experience with UAVs. [] Additional graduate education could substitute for professional experience and significant work experience could substitute for formal education.

Pet. 19 (citing Ex. 1003 ¶ 20).

In the Institution Decision, we preliminarily adopted Petitioner's definition of an ordinarily skilled artisan based upon a determination that it was sufficiently supported by the record at that time. Dec. 10. In the Patent Owner Response, Patent Owner asserts that the definition proposed by

Petitioner is inappropriate "because it references a degree in electrical engineering." PO Resp. 9–10. According to Patent Owner,

> A person of ordinary skill in the art ("POSA") at the time of the invention of the '000 patent would have had a bachelor's degree in mechanical engineering and at least two years of experience designing mechanisms and mechanical structures of the type used in releasable couplings and locking devices. (Ex. 2001 ¶¶ 30-34.) Additional education could substitute for professional experience and significant work experience could substitute for formal education. (*Id.*)

Id. at 9. In the Reply, Petitioner asserts that Patent Owner's definition is overly narrow because it "focus[es] solely on the design of mechanisms and mechanical structures used in releasable couplings and locking devices." Pet. Reply 3. According to Petitioner and Dr. Alonso, "[a]eronautical, electrical, and mechanical engineers, particularly those working with UAVs, would naturally work with and understand mechanisms for coupling one component to another component." *Id.* (citing Ex. 1049 ¶ 6). Further Petitioner and Dr. Alonso assert that Petitioner's inclusion of a broader set of engineering fields is "supported by the simplicity of the latching mechanism claimed in the '000 patent." *Id.* (citing Ex. 1049 ¶ 5).

Petitioner and Patent Owner agree that the differences in their proposed definitions do not impact Petitioner's grounds for unpatentability or Patent Owner's responsive arguments. Pet. Reply 3; PO Sur-Reply 1. We agree and note that our consideration of the issues presented does not turn on which proposed definition is applied. In any event, having considered the evidence and the arguments, we find Petitioner's rationale for its broader description of the level of ordinary skill in the art to be persuasive and supported by record as a whole. Accordingly, for this Decision, we adopt Petitioner's description of a person of ordinary skill in

the art, while maintaining that the prior art reflects the appropriate level of skill at the time of the claimed invention. *See Okajima v. Bourdeau*, 261 F.3d 1350, 1355 (Fed. Cir. 2001).

C. Claim Construction

In a post-grant review involving a petition that was filed before November 13, 2018, such as here, we interpret a claim in an unexpired patent based on the broadest reasonable construction in light of the specification of the patent in which it appears. 37 C.F.R. § 42.100(b) (2018); *Cuozzo Speed Techs., LLC v. Lee*, 136 S. Ct. 2131, 2142 (2016) (affirming applicability of the broadest reasonable construction standard in Board trial proceedings).[6] Under that standard, and absent any special definitions, we give claim terms their ordinary and customary meaning, as would be understood by one of ordinary skill in the art at the time of the invention. *In re Translogic Tech., Inc.*, 504 F.3d 1249, 1257 (Fed. Cir. 2007); *TriVascular, Inc. v. Samuels*, 812 F.3d 1056, 1062 (Fed. Cir. 2016) ("Under a broadest reasonable interpretation, words of the claim must be given their plain meaning, unless such meaning is inconsistent with the specification and prosecution history.").

Any special definitions for claim terms must be set forth with reasonable clarity, deliberateness, and precision. *In re Paulsen*, 30 F.3d 1475, 1480 (Fed. Cir. 1994).

---

[6] The Final Rule changing the claim construction standard in Board trial proceedings does not apply here, as the Petition was filed before the rule's effective date, November 13, 2018. *See* Changes to the Claim Construction Standard for Interpreting Claims in Trial Proceedings Before the Patent Trial and Appeal Board, 83 Fed. Reg. 51,340, 51,344 (Oct. 11, 2018).

In the Institution Decision, we provided a preliminary construction of the single term for which Petitioner proposed a claim construction, i.e., "fixed with." Dec. 8–9. In particular, we determined that, in view of Specification, the broadest reasonable construction of the claim phrase "fixed with the clamp button" is "fastened to, attached or placed and not readily moveable with respect to the clamp button, such that it does not merely abut against the clamp button nor is it detachably connected to it." *Id.* at 9.

In the Patent Owner Response, Patent Owner asserts that "the term 'fixed with' needs no construction here because—whether the Board adopts Petitioner's proposal or Patent Owner's position—the . . . obviousness analysis will not ultimately be impacted." PO Resp. 9. In the Reply, Petitioner agrees with Patent Owner that "the construction of 'fixed with' is not necessary to resolve the controversy in this proceeding." Pet. Reply 2.

Based upon our review of the record as a whole, we agree that no claim terms are in controversy with respect to the asserted obviousness grounds. *See Vivid Techs., Inc. v. Am. Sci. & Eng'g, Inc.*, 200 F.3d 795, 803 (Fed. Cir. 1999) (only terms that are in controversy need to be construed, and only to the extent necessary to resolve the controversy). This finding is consistent with our analysis of the indefiniteness challenge, as discussed below in Section II.F.

D. Obviousness over the Phantom 2 Manual and Kondo

Petitioner asserts that the combination of the Phantom 2 Manual and Kondo renders claims 1–12 obvious. Pet. 19–55, Pet. Reply 4–24. Patent Owner disagrees. PO Resp. 21–28, PO Sur-Reply 2–9.

1. Phantom 2 Manual

The Phantom 2 Manual is a user manual for the "Phantom 2 Vision+" UAV. Ex. 1029, 2. The Phantom 2 Manual includes instructions for the assembly and use of the UAV, and describes the features of the UAV components, including the battery and battery compartment. *Id.* at 7–11. In particular, the Phantom 2 Manual describes the UAV as a "quadrotor" with a "specialized battery compartment for its flight battery." *Id.* at 11. According to the Phantom 2 Manual, those and other "features make the Phantom 2 Vision+ easy to assemble and configure." *Id.*

Figure 18 of the Phantom 2 Manual is reproduced below:

Figure 18

Figure 18 depicts the Phantom 2 UAV with its four arms and propellers. *Id.* at 14. A motor is positioned below each propeller. *Id.*; *see also id.* at 11 (Figure 8, component [2]).

Figures 3, 5, and 7 of the Phantom 2 Manual are reproduced below:

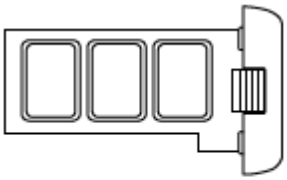

Smart Flight Battery

Figure 3

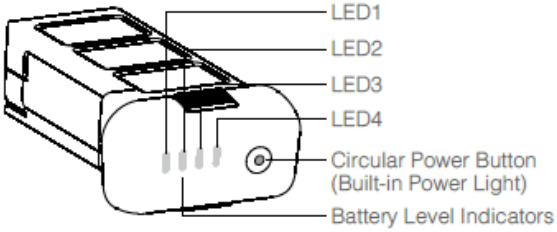

Figure 5

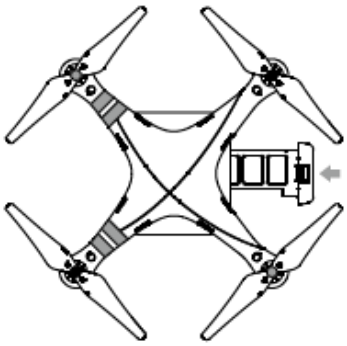

Figure 7

Figures 3, 5, and 7 each depict the battery used in the Phantom 2 UAV. *Id.* at 7, 8, 10. The Phantom 2 Manual explains that the battery is installed by "push[ing the] battery into the battery compartment" as shown in Figure 7 (arrow). *Id.* at 10. The Phantom 2 Manual states, "When you hear a click, the battery has been properly installed." *Id.*

2. Kondo

Kondo discloses an "attachment structure which allows a battery pack including secondary cells to be detachably attached to a battery holder in a power-driven tool." Ex. 1008, 1:6–10.

Figures 3 and 4 of Kondo are reproduced below:

FIG 3

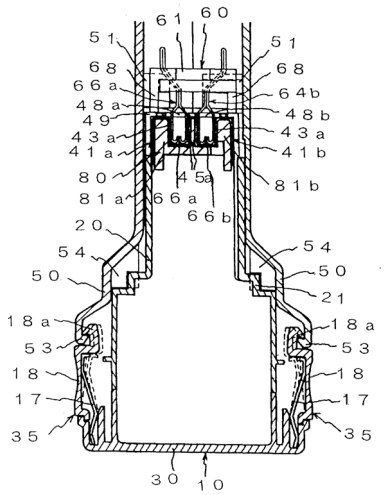

FIG 4

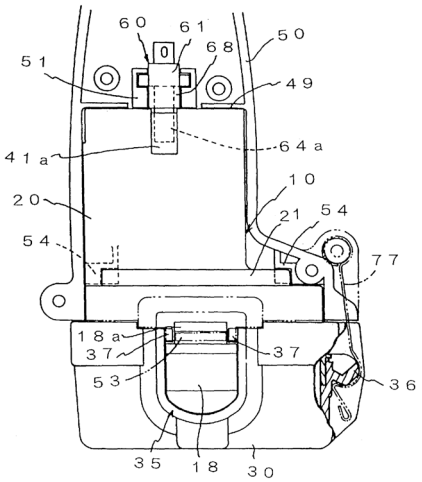

Figure 3 is a cross-sectional view illustrating the attachment structure of an embodiment of Kondo's invention. *Id.* at 7:15–16. Figure 4 is a partially omitted side view illustrating the attachment structure of the same embodiment as shown in Figure 3. *Id.* at 7:16–18. The Specification states,

> When the battery pack 10 is inserted upward into the battery holder 60 fixed to the handle assembly 50 of the power-driven tool, the pair of stop hooks 18 formed on the lower end of the battery pack 10 are engaged with curved elements 53 of the housing members 50a and 50b. The curved element 53 is formed by bending inward the lower end of each housing member 50a (50b). Each stop hook 18 arranged in the attachment member 35 is pressed outward by a flat spring 17 and has a hook end 18a held by a pair of projections 37 as clearly shown in FIG. 4. Once the stop hooks 18 of the battery pack 10 are engaged with the curved elements 53 of the handle assembly 50, the engagement is kept by the pressing force of the flat springs 17.
>
> In this state, the spring terminals 64a and 64b of the battery holder 60 are fitted in the insertion slots 48a and 48b of the connection unit 40. Each insertion element 66a (66b) of the

> spring terminal 64a (64b) is pressed inward and received in the space defined by the inner wall of the U-shaped element 43a and the upright element 45a of the electrode terminal assembly 41a (41b). The elasticity of the spring terminals 64a and 64b presses the insertion elements 66a and 66b thereof against the electrode terminal assemblies 4la and 4lb. This realizes electrical connection of the spring terminals 64a and 64b with the electrode terminal assemblies 41a and 41b and enables the battery pack 10 to be integrally joined with the battery holder 60 of the power-driven tool.

Id. at 7:18–45 (bold and italics emphasis removed).

3. Analysis

a) Petitioner's Contentions

In the Petition, Petitioner sets forth in detail how the Phantom 2 Manual discloses a multi-rotor UAV comprising: (1) a main body comprising a battery compartment, (2) four arms coupled to the main body, (3) a propulsion assembly comprising a propeller and a motor to drive the propeller to rotate and generate a lift force, and (4) a battery accommodated in the battery compartment, wherein the battery comprises a shell and a battery body disposed in the shell. Pet. 27–30. Petitioner illustrates with a side-by-side comparison of Figure 1 of the '000 patent and Figure 18 of the Phantom 2 Manual how the two UAV's share the same basic quadcopter structure. Pet. 28.

Petitioner's side-by-side comparison of Figure 1 of the '000 patent and Figure 18 of the Phantom 2 Manual is reproduced below:

Phantom 2 Manual, Figure 18

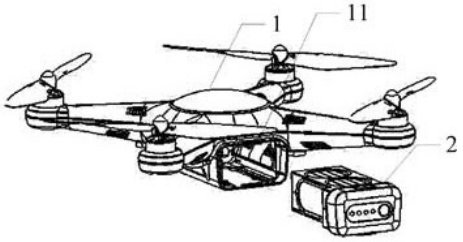

'000 Patent, Figure 1

Petitioner asserts that both Figure 1 of the '000 patent and Figure 18 of the Phantom 2 Manual depict a quadrotor, i.e., a UAV having a main body and four arms, wherein each arm is equipped with a propeller assembly. Pet. 28; Ex. 1003 ¶ 55. Referring to Figure 7 of the Phantom 2 Manual, set forth above, Petitioner explains that the Phantom 2 Manual discloses that its UAV includes a "specialized battery compartment for its flight battery" that is integrated into the side of the main body of the UAV. Pet. 30 (quoting Ex. 1029, 11). Petitioner also demonstrates the similarity between the structure of the battery assembly disclosed by the Phantom 2 Manual and the '000 patent with a side-by-side comparison of a figure from each reference. *Id.* at 32.

Petitioner's side-by-side comparison of annotated versions of Figure 5 of the Phantom 2 Manual and Figure 1 of the '000 patent is reproduced below:

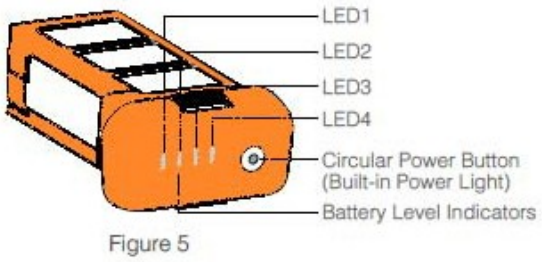

Phantom 2 Manual, Figure 5 (annotated)

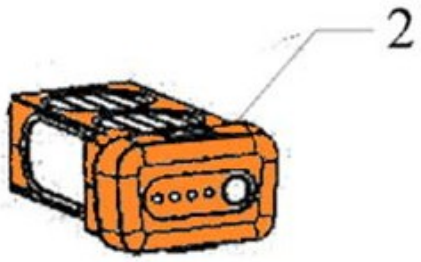

'000 Patent, Excerpt from Figure 1 (annotated)

Petitioner asserts that both annotated Figure 5 of the Phantom 2 Manual and Figure 1 of the '000 patent, above, depict a battery assembly comprising a shell (shaded orange) and a battery body substantially disposed in the shell (shaded white). Pet. 31.

Regarding the limitation in claim 1 requiring "a clamp button, disposed on the shell, wherein one end of the clamp button is mounted on the shell and the other end of the clamp button is detachably coupled to the main body," Petitioner begins by referring to Figures 3 and 5 of the Phantom 2 Manual, set forth above, and asserting that the Phantom 2 Manual discloses a button disposed on both sides of the battery. *Id.* at 32–33. Petitioner acknowledges that "[o]ther than depicting buttons on its battery package and referencing a 'click' sound when the battery is inserted, the Phantom 2 Manual does not provide details regarding the mechanism used to latch the battery into the device." *Id.* at 21.

To reach the claim limitation requiring a "clamp button," Petitioner relies upon Kondo's disclosure. *Id.* at 32. In particular, Petitioner asserts that Kondo's battery package also includes buttons disposed on both sides, wherein the battery pack includes a pair of attachment members 35 which

are each provided with a stop hook 18. *Id.* (citing Ex. 1008, Fig. 3, 7:15–31). According to Petitioner, Kondo's stop hook 18 is a "clamp button" because it engages, i.e., clamps, with the curved element in the battery compartment. *Id.* (citing Ex. 1003 ¶ 81).

Additionally, Petitioner asserts that Kondo's stop hook mounts on the shell of its battery pack in a similar manner as shown in the '000 patent, wherein one end of the stop hook, or clamp button, has a portion that couples with a corresponding portion in the battery shell. *Id.* at 34–35.

Further, Petitioner asserts that Kondo discloses that its stop hook detachably couples the battery pack to the main body of the portable device by teaching that "[o]nce the stop hooks 18 of the battery pack 10 are engaged with the curved elements 53 of the handle assembly 50, the engagement is kept by the pressing force of the flat springs 17." *Id.* at 36 (quoting Ex. 1008, 7:28–31).

Petitioner asserts that Kondo discloses a spring 17 that functions as a "restorable elastic piece," because Kondo explains that when force is applied to the clamp button, spring 17 is pressed inwards to lower the hook end of stop hook 18, which allows stop hook 18 to move past the curved element of the battery compartment during insertion or removal of the battery pack. *Id.* at 37–38 (citing Ex. 1003 ¶ 85). According to Petitioner and Dr. Alonso, Kondo's Figure 3 illustrates that "[w]hen the battery is inserted into the battery compartment and the external force is removed from the clamp button, the restoring force of the spring 17 presses the stop hook 18 outward so that the curved element 53 of the housing engages with hook end 18a." *Id.* (citing Ex. 1003 ¶ 85; Ex. 1008, Fig. 3).

Additionally, Petitioner and Dr. Alonso assert that Kondo's Figure 3 illustrates that "one end of Kondo's spring 17 is inserted between the outer

shell of the battery and a small protrusion of the shell," so as to meet the claim limitation requiring that one end of the restorable elastic piece "is disposed on the shell." *Id.* at 39 (citing Ex. 1003 ¶ 86). They assert that Kondo's Figure 3 also illustrates that the other end of spring 17 is "bent to follow the shape of the inner corner of the clamp," with "no clearance between the end of Kondo's spring 17 and the inner surface of the stop hook 18 ('clamp button')." *Id.* at 40 (citing Ex. 1003 ¶ 87). Petitioner asserts, therefore, that "the fit of the end of the spring with the clamp button is tight and the force of the spring after installation presses the end of the spring against the inner surface of the stop hook 18." *Id*. According to Petitioner and Dr. Alonso, "[b]ased on this engagement, the end of spring 17 is placed ('disposed') so as to be firm and not readily moveable relative to the clamp button after implementation—that is, the spring is 'fixed with' the clamp button," thereby meeting the claim recitation that the "other end of the restorable elastic piece is fixed with the clamp button." *Id.* (emphasis omitted).

Petitioner asserts that Kondo's curved element 53 represents a "clamping portion," as claimed, because it is designed to engage with the hook portion 18a of Kondo's "clamp button." Pet. 42. In particular, Petitioner notes that Kondo states that upon insertion of the battery pack "the pair of stop hooks 18 formed on the lower end of the battery pack 10 are engaged with curved elements 53 of the housing members 50a and 50b." *Id.* (quoting Ex. 1008, 7:18–23). According to Petitioner and Dr. Alonso, the battery pack is removed by "pressing down on the 'clamp buttons' (stop hooks 18) which in turn press spring 17 inwardly to disengage the hook portion 18a from the curved element of the battery compartment." *Id.* (citing Ex. 1003 ¶ 90) (emphasis omitted). Further, Petitioner demonstrates

how Kondo's clamping portion, i.e., curved element 53 shown in Kondo's Figure 3, appears to connect to the clamp button in the same manner as illustrated in Figure 4 of the '000 patent, such that the combination of the Phantom 2 Manual and Kondo discloses "the battery compartment comprises a clamping portion configured to detachably connect to the clamp button," as required by claim 1. *Id.* at 43–44.

The challenged claims also include a requirement for the clamp button in a first state, wherein the battery is not completely pushed into the battery compartment, or is only partially pushed into the battery compartment, and requirements for the restorable elastic piece in a second state, wherein the battery is completely pushed or positioned into the battery compartment. Ex. 1001, 6:4–16. Petitioner asserts that the combination of the Phantom 2 Manual and Kondo meets each of those limitations. Pet. 44–48.

Specifically, Petitioner asserts that the combination teaches the limitation that "the clamp button is configured to cause the restorable elastic piece to be pressed down in first state where the battery is not completely pushed into the battery compartment or is only partially positioned in the battery compartment," because Kondo teaches that during insertion of the battery into the battery compartment, "the inward movement of the battery causes the curved element 53 of the battery compartment to contact the hook end 18a of Kondo's stop hook 18 ('clamp button') which in turn causes the spring 17 to press inwards," and causes the hook end 18a of the Kondo's clamp button to move downward. *Id.* at 45 (citing Ex. 1008, 7:15–31; Ex. 1003 ¶ 94). According to Petitioner and Dr. Alonso, when the battery pack is not completely pushed into the battery compartment or is partially positioned in the battery compartment, spring 17 is in this "pressed down state." *Id.* (citing Ex. 1008, Fig. 3). Similarly, Petitioner asserts that the

battery is not completely pushed into the battery compartment or is only partially positioned in such compartment during the removal of the battery from the battery compartment, which involves a user pressing the clamp buttons, thereby causing spring 17 to be pressed inward and the hook end 18a to move downward, resulting in the hook portion becoming disengaged from the curved element 53, i.e., the restorable elastic piece. *Id.* at 46–47 (citing Ex. 1003 ¶ 95).

Petitioner asserts that the combination teaches the claim limitation wherein when the battery is completely pushed or positioned into the battery compartment, "the restorable elastic piece is configured to automatically rebound so that (a) the clamp button is able to return back to its original place and (b) the battery is able to be stuck by the cooperation of the clamping portion and the clamp button." *Id.* at 47. Petitioner asserts that "Kondo explains that when the battery pack 10 is inserted into the portable device, 'the pair of stop hooks 18 formed on the lower end of the battery pack 10 are engaged with curved elements 53 of the housing members 50a and 50b,'" and states that after the battery is inserted, "the engagement is kept by the pressing force of the flat springs 17." *Id.* (quoting Ex. 1008, 7:18–23, 28–31). According to Petitioner and Dr. Alonso, that means "spring 17 presses the 'clamp button' outwards, restoring it to its original place when the opposing force is removed from stop hook 18," and that the battery is "stuck by the cooperation of the clamping portion and the clamp button," as required by claim 1. *Id.* (citing Ex. 1003 ¶ 96) (emphasis omitted).

According to Petitioner, a person of ordinary skill in the art would have been motivated to use Kondo's battery latching mechanism in the Phantom 2 UAV because the Phantom 2 Manual does not provide details

regarding the specific mechanism used to latch the battery into the battery compartment. *Id.* at 23. Petitioner asserts that the skilled artisan would have been motivated to review a reference describing battery latching mechanisms for portable electronic devices, as provided by Kondo. *Id.* Petitioner explains that Kondo's disclosure directed to a power tool is analogous art because it addresses a problem with which the inventors of the '000 patent are involved, i.e., how to latch a battery package into a housing of an electronic device in a secure, user-friendly manner. *Id.* at 24. Additionally, Petitioner asserts that the proposed combination merely represents a "simple substitution of one element (Phantom 2 Manual's battery latch) with another (Kondo's secure, user-friendly latching mechanism)." *Id.* at 26 (citing Ex. 1003 ¶ 67).

b) Patent Owner's Contentions

Patent Owner does not dispute Petitioner's assertions regarding the separate teachings of the Phantom 2 Manual and Kondo. Rather, Patent Owner's contentions are directed to Petitioner's proposed combination of those teachings to arrive at the claimed subject matter. In one aspect, Patent Owner contends that Petitioner has not established a motivation to modify the Phantom 2 Manual at all. PO Resp. 21 (citing Ex. 2001 ¶¶ 58–79). According to Patent Owner, a skilled artisan seeking details of the mechanism used to latch the battery or secure the coupling in the Phantom 2 would have "been far more likely to obtain, inspect, and experiment with the battery latching mechanism on an actual Phantom 2 rather than engaging in research to find alternatives." *Id.* at 22 (quoting Ex. 2001 ¶ 60). Patent Owner asserts that even if a Phantom 2 was unavailable for such inspection, Petitioner still has not identified "any problem associated with the Phantom

2 that would encourage or motivate a POSA to create a more secure latching mechanism." *Id.* at 23 (Ex. 2001 ¶¶ 61–62).

In another aspect, Patent Owner asserts that a person of ordinary skill in the art would not have looked to Kondo for a mechanism to latch the battery into the battery compartment of the Phantom 2 because Kondo describes a hand-held power tool which is a device that is "entirely different from the Phantom 2 itself and from other UAVs." *Id.* at 22 (citing Ex. 2001 ¶¶ 29, 68). In support of that contention, Patent Owner asserts that (1) UAVs and power tools use different types of batteries, (2) UAVs and power tools are subjected to different service loads, (3) consequences of a battery becoming dislodged are less consequential for hand-held power tools than UAVs, (4) reducing weight is a much higher priority when designing batteries for quadcopter UAVs, (5) there is no basis to believe that synergies between UAVs and power tools, particularly in battery design, were recognized at the time of the invention, and (6) power tool batteries and UAVs have been known for years and yet the spring-loaded latching mechanisms for power tools had not been combined with UAVs. *Id.* at 23–28.

c) Petitioner's Reply

Regarding Patent Owner's assertion that a person of ordinary skill in the art would not have had a reason to modify the Phantom 2 Manual because the skilled artisan would have been more likely to look to the actual Phantom 2 rather than engaging in research to find alternatives, Petitioner asserts that Patent Owner "cites no legal authority for its extraordinary position that a product manual should and can only be combined with the product itself." Pet. Reply 10. As for Patent Owner's assertion that the skilled artisan would not have had a reason to modify the Phantom 2 Manual

because the reference does not disclose a problem with its battery latching mechanism, Petitioner asserts that such argument should be disregarded because, "even if a reference describes an operable device or component, a POSITA would have still been motivated to make improvements." *Id.* at 9. In support of that contention, Petitioner notes that the motivation to combine may be found in a number of sources, including "the background, knowledge, creativity, and common sense of the person of ordinary skill," *id.* (quoting *ZUP, LLC v. Nash Mfg., Inc.*, 896 F.3d 1365, 1371 (Fed. Cir. 2018)), and asserts that the Petition identifies design incentives, needs and problems known in the art which would have motivated a skilled artisan to integrate a known secure battery latching mechanism into the Phantom 2 UAV, *id.* at 9–11 (citing Pet. 9–12, 19–26; Ex. 1003 ¶¶ 26–36, 63–67).

Regarding Patent Owner's assertion that Kondo is non-analogous art based upon six alleged differences between UAVs and hand-held power tools, Petitioner contends that those reasons are "unsupported by evidence or legal precedent" and are "legally and factually irrelevant" to the issue of selecting a battery latching mechanism for a UAV. Pet. Reply 12–20. For example, Petitioner asserts that neither Patent Owner nor Dr. Reinholtz provides any evidence to support the assertion that there are fundamental differences in the structure and type of battery used in UAVs and power tools, or that such devices are subject to different service loads. *Id.* at 13–14. Further, Petitioner asserts also that Patent Owner has not explained why either the structure or type of battery or how a general service load on a device relates to the selection of a battery latching mechanism or would lead away from modifying a UAV latch with one used on a power tool. *Id.*

Additionally, Petitioner describes Patent Owner's assertion that the consequences of a battery being dislodged in a power tool are less than those

involved with a UAV as unsupported speculation and irrelevant. Petitioner asserts that regardless of whether such consequences are more serious for UAVs than for hand-held power tools, the fact that the latch is important to the operation of each "makes a power tool battery latch pertinent to the problem of designing a UAV battery latch." *Id.* at 16.

Similarly, Petitioner asserts that Patent Owner's assertion that because reducing weight is a much higher priority for UAVs, such devices typically use LiPo (lithium polymer) batteries "which were known to be fragile and at an extreme fire risk from mechanical damage," making the shell and latch requirements more demanding for UAVs than for hand-held power tools is speculative, unsupported, and irrelevant. *Id.* at 17 (quoting PO Resp. 26). Petitioner asserts that there is a strong motivation for power tools to be lightweight too. *Id.* Moreover, Petitioner asserts that Patent Owner has not provided any evidence that UAVs and hand-held power tools would not utilize the same type of battery or explained how its argument would have led a skilled artisan away from modifying a UAV battery latch with one used for a hand-held device. *Id.* at 17–18.

According to Petitioner, Kondo is analogous art because it is within the field of endeavor of the '000 patent. Petitioner asserts that the field of endeavor of the '000 patent is not limited to UAVs because "there is nothing about the battery latching mechanism of the '000 patent that requires any particular focus on UAVs." *Id.* at 5 (citing *In re ICON Health and Fitness, Inc.*, 496 F.3d 1374, 1380 (Fed. Cir. 2007)). Rather, Petitioner asserts that such field includes any area describing mechanisms for latching a battery in a portable consumer electronic device, such as Kondo. *Id.* at 6.

Further, Petitioner asserts that even if the field of endeavor of the '000 patent is considered to be limited to UAVs, Kondo is analogous art as it is

"reasonably pertinent" to the particular problem with which the inventors of the '000 patent are involved. *Id.* (citing *In re Clay*, 966 F.2d 656, 659 (Fed. Cir. 1992)). According to Petitioner, the '000 patent identifies the problem of how to latch a battery package to the body of a portable device, such as a UAV, in a secure, user-friendly manner. *Id.* (citing Pet. 13, 24, 65; Ex. 1003 ¶¶ 42–46, 64, 203). Petitioner asserts that "[b]attery-latching mechanisms for portable, consumer power tools are reasonably pertinent to the problem of latching a battery in a portable, consumer UAV" because both devices (a) involve heavy use and rough handling, (b) require secure battery position and engagement to avoid safety issues, and (c) require an easy mechanism for replacing batteries to limit interrupted operation. *Id.* at 6–8. Based on those similarities, Petitioner asserts that "UAV designers would have looked to other portable, consumer devices such as power tools for user-friendly mechanisms to latch and unlatch a battery." *Id.* at 8 (citing Pet. 9–12, 23–26, 65–70; Ex. 1003 ¶¶ 26–36, 63–67, 199–203). Moreover, according to Petitioner, Patent Owner's definition of a person having ordinary skill in the art does not limit the required experience to that of designing UAV couplings and locking devices. *Id.* (citing PO Resp. 9).

d) Patent Owner's Sur-Reply

In its Sur-Reply, Patent Owner maintains that Kondo is non-analogous art by asserting that it is in a different field of endeavor than the '000 patent. PO Sur-Reply 3. According to Patent Owner, the Specification of "the '000 patent "contains numerous explicitly [sic] and unambiguous statements that the invention's subject matter is tailored to the field of UAV batteries." *Id.* For example, Patent Owner asserts that the Specification describes shortcomings of preexisting UAV batteries, states that the claimed invention "relates to a battery used for unmanned aerial vehicles[s]," and places an

emphasis on reducing the "inconvenien[ce] of changing the battery used for the unmanned aerial vehicle." *Id.* (quoting Ex. 1001, 1:18–20, 24–50, 54–57) (alterations in original). Additionally, Patent Owner asserts that the challenged claims are expressly tied to a quadcopter UAV, as limitations of the independent claim recite various quadcopter UAV components. *Id.* (citing Ex. 1001, 5:34–41). In contrast, Kondo is directed to hand-held power tools. *Id.* at 4. According to Patent Owner, because UAVs and hand-held power tools are "used in very different environments," they are not from the same field of endeavor. *Id.* (quoting *Smith & Nephew, Inc. v. Hologic, Inc.*, 721 F. App'x 943, 949 (Fed. Cir. 2018)).

Further, Patent Owner contends, in its Sur-Reply, that Kondo is not reasonably pertinent to the problem the '000 patent seeks to solve because the field of hand-held power tools would not have "commended itself to an inventor's attention" in considering the problem of designing a battery latch for a UAV. PO Sur-Reply 5 (quoting *Clay*, 966 F.2d at 659). In support of that contention, Patent Owner revisits its list of how UAVs and hand-held power tools differ.

Regarding reason (1), Patent Owner asserts again that UAV batteries use LiPo cells, whereas hand-held power tools typically use Li-Ion cells which are less fragile, heavier and have a cylindrical shape which does not optimize space between the cells. *Id.* at 6. Regarding reason (2), Patent Owner refers to its earlier contention that UAVs and hand-held tools are subject to different operational demands, asserting here that "[w]hat matters for the reasonably pertinent analysis is that the service loads are *different*," meaning that a UAV battery latch is designed to solve a different problem. *Id.* Regarding reason (3), Patent Owner asserts again that, unlike with a UAV, if a power tool battery becomes dislodged, it does not cause any harm.

Id. at 7–8. According to Patent Owner, "[t]his means there is a higher tolerance for failure in a power tool battery latch than a UAV's battery latch, and a UAV's battery latch is designed with a higher factor of safety, and with additional feedback mechanisms, for this reason." *Id.* at 8 (citing Ex. 2001 ¶ 69).

Regarding reason (4), Patent Owner contends that an inventor would not have considered a battery latch used in a hand-held tool because "a UAV battery must be built in a way that uses space and weight in the most efficient way possible, while hand-held power tools are subject to much more lenient space and weight constraints." *Id.* at 5. Patent Owner asserts that this "leads to a strong preference for UAV batteries that have 'simpler designs with fewer components over more complex designs with multiple interlocking or interacting structures.'" *Id.* (quoting Ex. 2001 ¶ 70). According to Patent Owner, that assertion is adequately supported by common knowledge that "optimizing space and weight are extremely high priorities in any object that flies." *Id.* at 6.

Regarding reasons (5) and (6), Patent Owner repeats its assertions that there are no synergies between hand-held power tools and unmanned aerial vehicles, and that at the time of the invention, it did not occur to anyone to combine power tool battery latches with UAVs. *Id.* at 8–9.

Patent Owner asserts that even if Kondo is analogous to the '000 patent, Petitioner has failed to show that a skilled artisan would have been motivated to combine the Phantom 2 Manual with Kondo. *Id.* at 9. Patent Owner asserts that Petitioner's rationale for the combination is "tainted with hindsight bias and should be disregarded." *Id.* at 10. According to Patent Owner, "each of the six reasons raised by Patent Owner and its expert illustrate how designing a battery system in a UAV is subject to a host of

different design priorities, considerations and technical challenges when compared to a hand-held power tool." *Id.*

e) Discussion

Based upon our review and consideration of the arguments and evidence, we find that Petitioner demonstrates persuasively that each element of the challenged claims is taught or suggested by the combined teachings of the Phantom 2 Manual and Kondo. In particular, we find that Petitioner has shown that the Phantom 2 Manual discloses a multi-rotor UAV comprising a main body comprising a battery compartment, four arms coupled to the main body, a propulsion assembly comprising a propeller and a motor to drive the propeller to rotate and generate a lift force, and a battery accommodated in the battery compartment, wherein the battery comprises a shell and a battery body disposed in the shell. Pet. 27–32.

As for the claim recitations relating to the battery latching mechanism, i.e., the clamp button with a restorable elastic piece disposed on an inner side of it and the clamping portion of the battery compartment with which it detachably connects, we find that Petitioner has shown that Kondo teaches a battery latching assembly comprising each of those elements, i.e., stop hooks 18 (clamp button), spring 17 (restorable elastic piece), and a curved element 53 (clamping portion). Pet. 32–48.

Patent Owner does not dispute that the combination of the Phantom 2 Manual and Kondo teaches or suggests each limitation of the challenged claims. *See In re NuVasive*, 841 F.3d 966, 974 (Fed. Cir. 2016) (explaining that the Board need not make specific findings as to claim limitations that Patent Owner does not dispute are disclosed in the prior art). Nor does Patent Owner dispute that a person of ordinary skill in the art had the skill to combine those teachings, i.e., using the battery latching mechanism taught

by Kondo as the battery latching mechanism for the quadcopter UAV disclosed in the Phantom 2 Manual, with a reasonable expectation of successfully arriving at the claimed invention. *See* Paper 10, 7 ("Patent Owner is cautioned that any arguments for patentability not raised in the response may be deemed waived."). Rather, the parties dispute whether a person of ordinary skill in the art would have had a reason to combine the Phantom 2 Manual with Kondo. Additionally, the parties dispute whether Patent Owner's evidence of secondary considerations supports an ultimate determination of non-obviousness. Thus, we address those disputed issues in turn.

(1) Motivation to Combine

The parties agree that the Phantom 2 includes some type of latching mechanism for its battery, although the Phantom 2 Manual does not provide details regarding such mechanism. Yet Patent Owner asserts that a skilled artisan would have "been far more likely to obtain, inspect, and experiment with the battery latching mechanism on an actual Phantom 2 rather than engaging in research to find alternatives." PO Resp. 22. We discount that argument as Patent Owner's position is unsupported by any legal authority and disregards patent law principles recognizing obviousness over a combination of prior art teachings.

Next, Patent Owner asserts that the lack of detail in the Phantom 2 Manual regarding the battery latching mechanism used would "discourage, rather than encourage a POSA to modify the Phantom 2 battery," particularly because Petitioner has not identified "any problem associated with the Phantom 2 that would encourage or motivate a POSA to create a more secure latching mechanism." *Id.* at 23. That argument, however, fails to consider that the motivation to combine may be found in a number of

sources, including "the background, knowledge, creativity, and common sense of the person of ordinary skill," as Petitioner asserts. Pet. Reply 9 (quoting *ZUP, LLC*, 896 F.3d at 1371).

Based upon our review, Petitioner has set forth persuasive reasons why a person of ordinary skill in the art would have been motivated to review and combine a reference describing battery latching mechanisms for portable electronic devices, such as Kondo, with the Phantom 2 Manual. In particular, Petitioner asserts that such motivation is supplied by the lack of detail in the Phantom 2 Manual regarding the specific battery latching mechanism used. Pet. 23. We agree with Petitioner that a person of ordinary skill in the art would have been motivated to search and review references describing battery latching mechanisms for portable electronic devices to address that deficiency in the Phantom 2 Manual. *See id.* Further, Petitioner has demonstrated that a skilled artisan would have looked to Kondo because it is directed to and describes such a battery latching mechanism in detail. *Id.* at 23–24.

The parties dispute whether Kondo is analogous art to the claimed invention. Based upon our review of the arguments and evidence, we find that it is. "Two criteria have evolved for determining whether prior art is analogous: (1) whether the art is from the same field of endeavor, regardless of the problem addressed, and (2) if the reference is not within the field of the inventor's endeavor, whether the reference still is reasonably pertinent to the particular problem with which the inventor is involved." *Clay*, 966 F.2d at 658–59.

Patent Owner argues that Kondo and the '000 patent are not from the same field of endeavor because Kondo is concerned with batteries for hand-held power tools and the challenged patent is directed to batteries for UAVs.

PO Sur-Reply 3–5. Petitioner asserts that the field of endeavor includes any area describing mechanisms for latching a battery in a portable consumer electronic device. Pet. 24; Pet. Reply 6. We find Petitioner's description of the field of endeavor to be overly broad as the '000 patent explicitly states that it "relates to [the] unmanned aerial vehicle field, more particularly, relates to a battery used for unmanned aerial vehicle and an unmanned aerial vehicle." Ex. 1001, 1:18–20. Moreover, as Patent Owner correctly asserts, the only independent claim of '000 patent recites "[a] multi-rotor unmanned aerial vehicle," comprising components of such a UAV, including its battery compartment, battery, and battery latching mechanism. *Id.* at 5:34–6:16. In contrast, Kondo explicitly states that it "relates to a novel attachment structure which allows a battery pack including secondary cells to be detachably attached to a battery holder in a power-driven tool." Ex. 1008, 1:6–9. Moreover, each of Kondo's claims are directed toward such attachment structure for power-driven tools. Petitioner has not argued persuasively why we should consider either of the fields of endeavor for the challenged patent or Kondo to be more inclusive than what each patent explicitly describes its own field to be.

Accordingly, we agree with Patent Owner that Petitioner has not shown that Kondo is in the same field of endeavor as the '000 patent. However, our inquiry whether Kondo is analogous art does not end there.

Next, we consider whether Kondo is reasonably pertinent to the particular problem with which the inventors of the '000 patent are involved, meaning it is "one which, because of the matter with which it deals, logically would have commended itself to an inventor's attention in considering his problem." *Clay*, 966 F.2d at 659. According to Petitioner, Kondo's disclosure is reasonably pertinent because the problem it addresses, i.e., how

to securely latch a battery package into a housing of an electronic device in a secure, user-friendly manner, is similarly addressed in the ’000 patent. Pet. 24; Pet. Reply 6–8. Patent Owner argues that Kondo is not reasonably pertinent based upon alleged differences between design considerations for UAV batteries compared to hand-held power tool batteries. PO Resp. 23–28; PO Sur-Reply 5–10. Patent Owner, however, does not adequately support those alleged differences with evidence or explain sufficiently why such differences would have caused the ’000 inventors to not take account of the battery latching mechanism used to detachably connect a battery in a different device, such as that taught by Kondo.

Based upon our review of the arguments and evidence, we find that Petitioner has shown persuasively that Kondo is reasonably pertinent to the problem addressed by the ’000 patent. The ’000 patent explains that the technical problem the invention seeks to solve is to overcome the defect that causes changing the battery in the UAV to be inconvenient. Ex. 1001, 1:54–57. The Specification describes that defect not as revolving around the UAV itself, but rather as a direct result of using a sealing board that is fixed to the main body of the UAV to fasten the battery. *Id.* at 1:41–44. The sealing board is fixed to the main body of the UAV by screws, bolts, or other fasteners that must be loosened before changing the battery and again fastened after changing the battery. *Id.* at 1:45–50. In other words, the problem addressed in the challenged patent relates to how the prior art battery fastening approach, i.e., the use of a screwed or bolted sealing board, caused changing the battery to be inconvenient. Kondo teaches a different approach to maintaining a battery in an electrical device, i.e., the use of a latching system, which eliminates the need to screw, bolt, or otherwise fasten a sealing board to the main body of the device, thereby solving the

problem, i.e., inconvenience, of having to loosen and fasten screws or bolts of a sealing board each time a battery is changed.

Although Patent Owner and Dr. Reinholtz have asserted various differences between UAVs and hand-held power tools regarding, e.g., the batteries they use and how the devices are used, we find no persuasive evidence of record suggesting that any such differences would have caused a person of ordinary skill in the art to not have reasonably consulted Kondo's teaching regarding a battery latching mechanism in seeking a solution to the problem the inventors of the '000 patent sought to solve.

Accordingly, because we agree with Petitioner that Kondo's teaching of a battery latching mechanism is reasonably pertinent to the battery fastening problem addressed by the '000 patent, we find that Kondo is analogous art to the challenged patent. Further, and for similar reasons, we are persuaded that modifying the Phantom 2 Manual to include Kondo's battery latching mechanism in place of the latching mechanism that exists on the Phantom 2 UAV would have amounted to no more than a simple substitution of one known battery latching mechanism for another. *See KSR Int'l Co. v. Teleflex Inc.*, 550 U.S. 398, 416–417 (2007).

(2) Secondary Considerations

We continue our analysis with a discussion of Patent Owner's asserted secondary considerations of nonobviousness. *Transocean Offshore Deepwater Drilling, Inc. v. Maersk Drilling USA, Inc.*, 699 F.3d 1340, 1349 (Fed. Cir. 2012). Patent Owner asserts that evidence of long-felt, but unsolved need in the industry and failure of others supports a finding of non-obviousness. PO Resp. 33–34.

Regarding long-felt need, Patent Owner asserts that (a) the Phantom 2 Manual is dated August 2014, (b) other quadcopter UAVs have been

available for sale at least since 1999, (c) Kondo was filed in February 1996 and published in June 1998, and (d) other latching mechanisms relied upon by Petitioner were filed and published in the late 1990's and early 2000's. *Id.* at 34. Without further explanation, Patent Owner states, "Accordingly, there has been a need in the industry as early as 1999 for a battery latching mechanism for quadcopter UAVs that strikes the right balance between securely latching the battery and allow[ing] a user to easily and quickly install and remove batteries between flights." *Id.* (citing Ex. 2001 ¶¶ 94–96). Patent Owner asserts further that "[t]he length of time between that recognized need and the inventions of the '000 patent, which has a priority date of December 14, 2015, represents a long-felt, but unsolved need in the industry for the inventions of the '000 patent." *Id.*

Based upon our consideration of the arguments and the evidence, we find that Patent Owner's assertion that the challenged claims have satisfied a long-felt but unmet need for securely and conveniently latching a detachable battery to a UAV is unsupported. To begin, we do not find that Patent Owner's assertions regarding the filing and publication dates of the cited prior art demonstrate that any long-felt need existed in the art as a whole regarding quadcopter UAV battery latches. *See Iron Grip Barbell Co., Inc. v. USA Sports, Inc.*, 392 F.3d. 1317, 1325 (Fed. Cir. 2004) ("[T]he mere passage of time without the claimed invention is not evidence of nonobviousness."). Nor has Patent Owner explained how that information might establish that such a need existed.

Further, even if such a long-felt need had been established, Patent Owner has not demonstrated sufficiently that the challenged claims met that need by demonstrating a nexus to the claims. *See Fox Factory, Inc. v. SRAM, LLC*, 944 F.3d 1366, 1373 (Fed. Cir. 2019). Indeed, upon careful

inspection, we note that the Patent Owner does not even assert as much in the Patent Owner Response. Rather, Patent Owner's argument begins and ends with a discussion of a "long-felt, but unresolved need," without any further assertion or evidence that the challenged claims *met* that alleged need. *See* PO Resp. 33–34.

Regarding failure of others, Patent Owner asserts that a company, GoPro, Inc., launched a quadcopter drone, named "the Karma," in 2016. *Id.* at 34. Patent Owner asserts that the Karma "'gained notoriety' for having a faulty battery latch" that would allow the battery "shake loose . . . and cause the drone to lose power." *Id.* According to Patent Owner, "[t]he failure of the Karma's battery latching mechanism is evidence of the failure of others to conceive of, and reduce to practice, the claimed inventions of the '000 patent." *Id.*

Based upon our consideration of the arguments and the evidence, we find that Patent Owner's assertion of the failure of others to provide a UAV with a battery latching mechanism that securely holds the battery and conveniently allows the battery to be changed is unsupported. As Petitioner correctly asserts, Patent Owner has failed to demonstrate, or even allege, a nexus to the challenged claims. *See Fox Factory*, 944 F.3d at 1373. In other words, Patent Owner has not shown that the battery latching element of the challenged claims obviates the failure of the battery latching mechanism in the Karma.

Accordingly, we find that the evidence submitted does not demonstrate that the challenged claims satisfied a long-felt unmet need or addressed a failure of others so as to support a finding of nonobviousness.

(3) Conclusion as to Obviousness

We base our final determination regarding obviousness upon an analysis of the foregoing arguments and evidence. In particular, we have considered the secondary considerations of nonobviousness and accorded them appropriate weight along with all of the other *Graham* factors. Accordingly, based upon the preponderance of the evidence, we conclude that claims 1–12 of the ’000 patent are unpatentable as obvious over a combination of the Phantom 2 Manual and Kondo.

E. Obviousness over Combinations Including Saika and Ichiba

Petitioner asserts that the combination of Saika and Ichiba renders claims 1–9 and 12 obvious. Pet. 55–92; Pet. Reply 4–23. Patent Owner disagrees. PO Resp. 21–28; PO Sur-Reply 2–10. Additionally, Petitioner asserts that the combination of Saika, Ichiba, and Phelps renders claims 10 and 11 obvious. Pet. 92–95; Pet. Reply 20–21. Patent Owner disagrees. PO Resp. 31–34; PO Sur-Reply 10–11. In the following discussion, we consider each of those contentions.

1. Saika

Saika discloses a UAV with a removable battery. Ex. 1006, code (57). Saika explains that “a battery which can be removed quickly and easily is advantageous.” *Id.* ¶ 4. Saika explains that its reference to a removable battery “may refer to both the electrochemical device used to store chemical energy in one or more cells and to the mechanical structure, e.g., the housing surrounding the electrochemical device and/or an assembly to mechanically couple to the aerial vehicle [].” *Id.* ¶ 39.

Figure 1 of Saika is reproduced below:

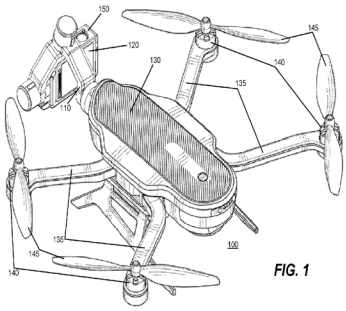

Figure 1 depicts an example of Saika's remote controlled UAV. Ex. 1006 ¶ 8. The UAV is described as a "quadcopter," i.e., it is "a helicopter with four rotors." *Id.* ¶ 28.

Figures 7A and 7B of Saika are reproduced below:

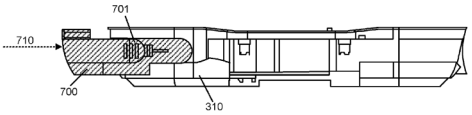

FIG. 7A

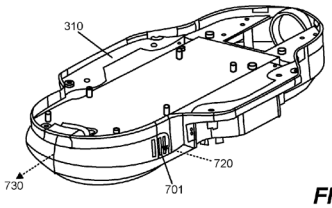

FIG. 7B

Figures 7A and 7B illustrate an example of Saika's removable latch battery and a chassis of the UAV. Ex. 1006 ¶ 14. Figure 7A illustrates a left side view of the latch battery 700. *Id.* ¶ 47. Figure 7B illustrates a rear, top, and right view of the latch battery and chassis 310. *Id.* The removable battery "may be coupled and removed from the aerial vehicle 100 by a latch or 'squeeze open' assembly." *Id.* In addition to the removable latch battery assembly, Saika also describes embodiments of the invention using either a removable pull-bar battery assembly or a lever battery assembly. *Id.* ¶ 23.

Regarding the embodiment using a latch battery assembly, Saika explains that the chassis may be part of the UAV and may have a cavity wherein the latch battery may be mechanically inserted and coupled with the UAV to provide power to the UAV. *Id.* ¶ 47. Saika describes the latch battery as follows:

> The latch battery 700 may include buttons 701 which may be used to decouple the latch battery 700 and the chassis 310. The latch battery 700 may be coupled to the chassis 310 by pushing the latch battery 700 in the direction indicated by the arrow 710. Once the latch battery 700, is fully inserted into the cavity in the chassis 310, a locking mechanism may be triggered. The latch battery 700 may be removed by pressing on the buttons 701 as depicted by the arrow 720 while simultaneously pulling the latch battery 700 in the direction indicated by the arrow 730.

Id. ¶ 48 (bold emphasis removed). According to Saika, this assembly allow the "battery to be quickly attached to and/or removed from [a UAV]." *Id.* ¶ 49.

2. Ichiba

Ichiba discloses "[a] battery pack provided with a pair of hooks which can interlock on both sides of an object device when slid on the installation parts of an electric tool or other object device . . . in a case which houses the batteries . . . ." Ex. 1010, Claim 1. The object of Ichiba's invention is to provide a battery pack that is "easy to handle and can be securely attached and detached on the object device," e.g., an electric tool. *Id.* at code (57).

Figures 2, 3, and 4 (a) – (c) of Ichiba are reproduced below:

[Figure 2]

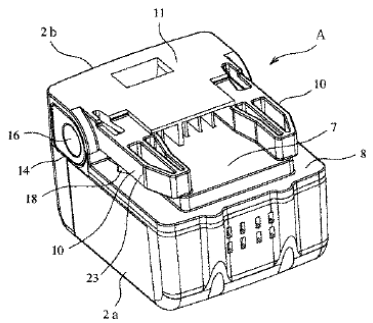

[Figure 3]

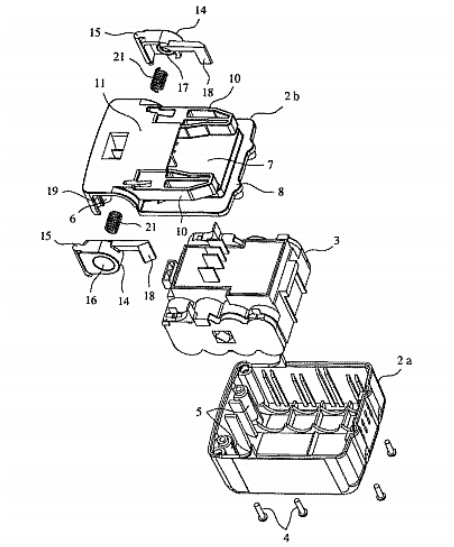

[Figure 4]

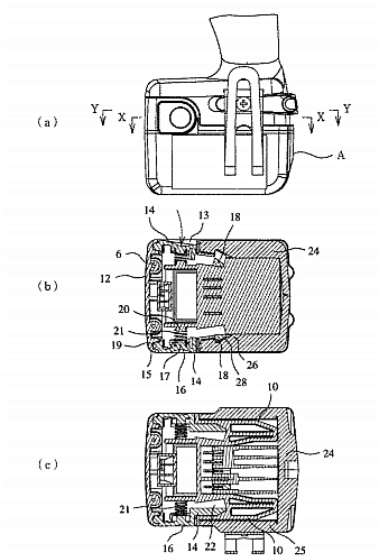

Figure 2 illustrates an inclined view of the battery pack. *Id.* ¶ 12. Figure 3 illustrates an exploded inclined view of the battery pack. *Id.* Figures 4 (a) – (c) illustrate, respectively, a side view of the battery pack, a sectional view of the battery pack along the X–X axis, and a sectional view of the battery pack along the Y–Y axis. *Id.* Ichiba explains,

> Battery pack A is comprised of an outside case 2 and an inside case 3. Outside case 2 is configured of a box-shaped case main body 2a, the upper end of which is left open, and a cover member

> 2b used to close the above-mentioned open end. Inside case 3 is configured so that it can house and retain four battery packs. After the battery has been housed in inside case 3, inside case 3 is then housed in outside case 2.

Id. ¶ 14.

Ichiba describes "[i]nterlocking jaw 18 on the front end of hook 14 is positioned on groove 23 between lower sheet part 8 and guide arm part 10 (see Figure 2)." *Id.* ¶ 16. According to Ichiba, "the pair of hooks 14 are spring energized together in the opening direction. When operating part 16 is pushed inside, it is linked to this, rotates around convex part 15 and hooks 14 can be moved inside in their entirety." *Id.* ¶ 17. Figure 4 (b) shows "an interlocking groove 28 corresponding to locking jaw 18 of hook 14 on battery pack A is formed on the inside surface." *Id.* ¶ 19.

Figure 5 is reproduced below:

[Figure 5]

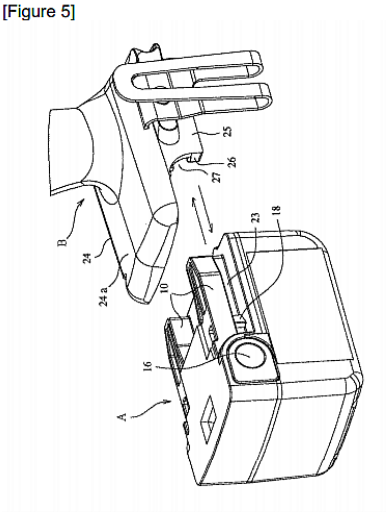

Figure 5 is an explanatory view of the installation mode of the battery pack. *Id.* ¶ 30. Ichiba explains that upon installation of battery pack A,

> guide arm part 10 of battery pack A is slid and pushed into sliding grove 27 of installation part B, as indicated in Figure 5. At the same time, protruding guide line 26 of installation part B is

> engaged in groove 23. Interlocking jaw 18 of hook 14 of battery pack A is pushed into interlocking groove 28 on installation part B by compression spring 21 and interlocked there on the part of battery pack A which is pushed in so that battery pack A is installed securely.

Id. ¶ 20. Compression spring 21 may be an elastic body. *Id.* ¶ 27.

To remove the battery, Ichiba explains,

> [o]perating parts 16 on both sides are pressed with the thumb and index finger from both sides so that these are grasped tightly inside. As a result, hook 14 of battery pack A rotates inside around convex part 15 and interlocking jaw 18 moves inside, thereby releasing the interlocking with interlocking groove 28. Then, battery pack A is slid in the opposite direction in this state and may be pulled out from installation part B of the electric tool.

Id. ¶ 21.

3. Phelps

Phelps discloses a "latching system for connecting a battery housing to a portable electronic device." Ex. 1011, 1:47–48. According to Phelps, a battery should "have a mechanical attachment to the device secure enough for ordinary and extraordinary conditions of use. The mechanical attachment of the battery to the device should also be easy to operate, yet not be triggered inadvertently." *Id.* at 1:23–26. Phelps' latching system comprises:

> a battery housing, a button extending from the exterior to the interior of the battery housing, and a springy metal sheet attached to the interior of the housing []. The button has a cam on its interior end which contacts the springy metal, so that the springy metal deflects when the button is moved. The button is located in an orifice in the housing, which maybe either a hole or a channel. When the springy metal sheet is deflected, the orifice in the springy metal sheet releases or catches on a projection on the electronic device. In one embodiment of the present

> invention, the button consists of a head, a neck, and shoulders, and the orifice comprises a narrow channel to accept the neck and a larger opening at one end of the channel which accepts the shoulders when forced through the larger opening. When the button is slid along the channel, the cam on the end of the button deflects the springy metal sheet, causing the springy metal sheet to release or engage the projection on the electronic device.

Id. at 1:49–66.

Figure 5 is reproduced below:

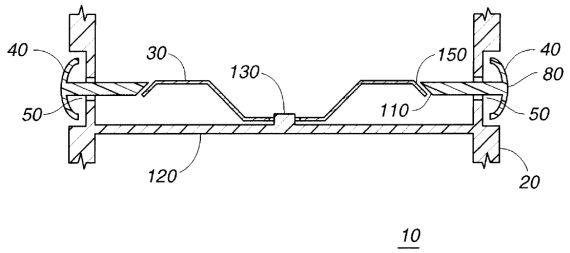

FIG. 5

Figure 5 is a cut-away top view of an embodiment of the battery housing latch of the invention. *Id.* at 1:41–42. Button 40 is "moved back and forth along the 'x' axis." *Id.* at 3:14–15. According to Phelps,

> In otherwords [sic], the button is pushed in and out of the housing (20). In this embodiment, the end (150) of the springy metal lies along a diagonal in the "xy" plane. For example, the diagonal might be a line (going through the origin) at 135 degrees to the x-axis. In this manner, in and out motions of the button (40) along the "x" axis are translated into motions of the springy metal (30) along the "y" axis. This causes the orifice (140) in the springy metal to either engage or disengage a projection (not shown) in the electronic device to which the battery housing (20) is attached. Button (40) could be attached to the housing (20) by means known to those skilled in the art, such as being placed in a well with a lip.

Id. at 3:15–27 (bold emphasis removed). Phelps explains that the button and housing may be made of plastic or rubber. *Id.* at 3:28–30.

4. Analysis

a) Petitioner's Contentions

In the Petition, Petitioner sets forth in detail how Saika discloses a multi-rotor UAV comprising: (1) a main body comprising a battery compartment, (2) four arms coupled to the main body, (3) a propulsion assembly comprising a propeller and a motor to drive the propeller to rotate and generate a lift force, and (4) a battery accommodated in the battery compartment, wherein the battery comprises a shell and a battery body disposed in the shell. Pet. 70–73 (citing Ex. 1006, Fig. 1). In particular, Petitioner demonstrates that Saika's Figure 1, set forth above, depicts a quadcopter, i.e., a UAV having a main body and four arms, wherein each arm is equipped with a propeller assembly. *Id.* at 70–71 (citing Ex. 1006, Fig. 1, ¶ 28). Petitioner asserts also that Saika teaches that there are "motors in the rotors" coupled with the propellers 145, thereby providing a propulsion assembly. *Id.* at 72 (quoting Ex. 1006 ¶ 64; citing Ex. 1003 ¶ 209).

Petitioner asserts that Saika explains that its quadcopter includes one or more removable batteries, such as latch battery 700, and a cavity in the UAV "within which the latch battery 700 is mechanically inserted." *Id.* at 71 (quoting Ex. 1006 ¶ 47). Petitioner asserts also that Saika describes the removable battery as referring to both the "electrochemical device used to store chemical energy in one or more cells," i.e., the battery body, and to the "mechanical structure, e.g., the housing surrounding the electrochemical device and/or an assembly to mechanically couple to the aerial vehicle 100," i.e., the battery shell. *Id.* at 73 (citing Ex. 1006 ¶ 39).

Petitioner asserts that Saika teaches that the housing of the battery may "contain mechanisms for mechanically coupling to the aerial vehicle

100 and/or mechanisms for assisting the user in attaching or detaching the battery to or from the aerial vehicle 100." *Id.* at 64–65 (citing Ex. 1006 ¶ 39). However, Petitioner acknowledges that "Saika does not provide details of the mechanisms used with the latch battery to mechanically couple to or detach from the UAV." *Id.* at 65.

To reach the claim limitation requiring a "clamp button," Petitioner relies upon Ichiba's disclosure of the components of its latching mechanism. *Id.* In particular, Petitioner asserts that the latching mechanism for Ichiba's battery package includes "a pair of hooks 14 which can interlock on both sides of an object device." *Id.* at 73–74 (quoting Ex. 1010, "Means of Solving Problem"). Petitioner asserts that Ichiba teaches that "hooks 14 are 'arranged inside opening part 13 on both sides' of the battery pack." *Id.* (quoting Ex. 1010 ¶ 16). According to Petitioner, Ichiba's hook 14 is the recited "clamp button." *Id.* Further, Petitioner asserts that Ichiba's latching mechanism includes a convex part 15 on the rear end of the hook that interlocks with a corresponding part formed on the shell of the battery package. *Id.* at 74–75 (citing Ex. 1010 ¶ 16). According to Petitioner, that end is mounted on the shell of the battery pack, meeting the claim limitation requiring "a clamp button disposed on the shell, wherein one end of the clamp button is mounted on the shell." *Id.* at 75 (citing Ex. 1003 ¶ 213).

Referring to Figure 4b of Ichiba, set forth above, Petitioner asserts that the combination of Saika and Ichiba teaches that the other end of the clamp button is "detachably coupled to the main body," as required by claim 1 because the end of Ichiba's hook 14, the clamp button, has an "interlocking jaw 18," and Saika's battery compartment includes a corresponding interlocking groove 28. *Id.* According to Petitioner, when Saika's battery package, including Ichiba's latching mechanism, is inserted

into the UAV, the "[i]nterlocking jaw 14 of hook of battery pack A is pushed into interlocking groove 28 on installation part B [UAV] by compression spring 21 and interlocked there . . . so that battery pack A is installed securely." *Id.* at 76 (quoting Ex. 1010 ¶ 20) (alterations in original). Petitioner notes also that Ichiba teaches that to remove the battery pack, "[o]perating parts 16 on both sides are pressed with the thumb and index finger from both sides," resulting in the "interlocking jaw 18 mov[ing] inside, thereby releasing the interlocking with interlocking groove 28." *Id.* (quoting Ex. 1010 ¶ 21) (alterations in original).

Petitioner asserts that Ichiba's latching mechanism also includes a restorable elastic piece, as required by claim 1, because Ichiba discloses a "'compression spring 21 placed between the spring receiving part 17' of hook 14 ('clamp button') and the 'spring receiving part 20' of the shell of the battery package." *Id.* at 77 (quoting Ex. 1010 ¶ 16). Petitioner asserts that Ichiba explains that compression spring 21 is "an elastic body" and "may be a spring or other material such as rubber and the like." *Id.* (quoting Ex. 1010 ¶ 27).

Petitioner and Dr. Alonso further contend that Saika's UAV, modified with Ichiba's latching mechanism, provides that "one end of the restorable elastic piece is disposed on the shell," as required by claim 1. Pet. 77–78 (citing Ex. 1003 ¶ 216). In particular, referring to Figure 4b, Petitioner and Dr. Alonso explain that Ichiba teaches that its clamp button (hook 14) has a "spring receiving part 17" and the battery shell has a corresponding "spring receiving part 20," but Ichiba does not describe the coupling between the compression spring 21 and the spring receiving part 20. *Id.* However, Petitioner and Dr. Alonso assert that Ichiba's Figure 4b shows that the spring receiving part 20 has a cylindrical protrusion having a diameter equal to the

inner diameter of the compression spring 21, such that one end of the compression spring may be fit onto the protrusion, wherein the end of the spring surrounds the protrusion. *Id.* at 77. According to Petitioner and Dr. Alonso, "[b]ecause the cylindrical protrusion is part of the battery shell in the combined UAV of Saika and Ichiba, the end of the compression spring placed on the protrusion of the battery shell is 'disposed on' the battery shell," meeting the claim requirement that "one end of the restorable elastic piece is disposed on the shell." *Id.* at 77–78.

Additionally, Petitioner and Dr. Alonso explain how Ichiba's Figure 4b illustrates that the other end of Ichiba's restorable elastic piece is fixed with the clamp button, as required by claim 1. *Id.* at 78–79. They assert that the spring receiving part 17 of Ichiba's clamp button, i.e., hook 14, has a "slot for receiving the end of the spring." *Id.* at 78 (citing Ex. 1003 ¶ 217). Petitioner asserts that the spring receiving part 17 is "located on the inner side of the clamp button." *Id.* According to Petitioner and Dr. Alonso, "[w]hen the end of the compression spring is placed into the slot in the spring receiving part 17 and the other end is placed on the spring receiving part 20, the force of the spring urges and retains the end of the spring in the slot in spring receiving part 17." *Id.* (citing Ex. 1010 ¶ 16; Ex. 1003 ¶ 217). Petitioner asserts, because the end of the compression spring cannot move with respect to the hook 14 after implementation, "Ichiba's compression spring 21 coupled to spring receiving part 17 is placed so as to be firm and not readily moveable relative to hook 14 after the latching mechanism is assembled—it is 'fixed with' hook 14," i.e., the clamp button. *Id.* at 78–79 (citing Ex. 1003 ¶ 217) (emphasis omitted).

As for the recited "clamping portion," Petitioner asserts this claim limitation is met by Ichiba's teaching that its latching mechanism includes

"an interlocking groove 28 corresponding to locking jaw 18 of hook 14," formed in the housing of the device receiving the battery. Pet. 80 (citing Ex. 1010 ¶ 19). According to Petitioner, in the modified UAV of Saika and Ichiba, the interlocking groove 28 is included in the battery compartment and the portion of the battery compartment comprising or defining the interlocking groove 28 is the recited "clamping portion." *Id.* at 79–80 (citing Ex. 1003 ¶ 219).

Further, Petitioner asserts that the clamping portion is "configured to detachably connect to the clamp button," as required by claim 1, because Ichiba teaches that upon insertion of the battery, "[i]nterlocking jaw 18 of hook 14 of battery pack A is pushed into interlocking groove 28 of installation part B by compression spring 21 and interlocked there on the part of battery pack A which is pushed in so that battery pack A is installed securely," *id.* at 81 (quoting Ex. 1010 ¶ 20) (alterations in original), and upon removal of the battery, "[o]perating parts 16 on both sides are pressed with the thumb and index finger from both sides," *id.* (quoting Ex. 1010 ¶ 21) (alterations in original). According to Petitioner, "[a]s a result, 'interlocking jaw 18 moves inside, thereby releasing the interlocking with interlocking groove 28.'" *Id.* (quoting Ex. 1010 ¶ 21).

The challenged claims also include requirements for the clamp button in a first state wherein the battery is not completely pushed into the battery compartment, or is only partially pushed into the battery compartment, and requirements for the restorable elastic piece in a second state wherein the battery is completely pushed or positioned into the battery compartment. Ex. 1001, 6:4–16. Petitioner asserts that the combination of Saika and Ichiba meets each of those limitations. Pet. 82–86.

Specifically, Petitioner asserts that the combination teaches the limitation that "the clamp button is configured to cause the restorable elastic piece to be pressed down in first state where the battery is not completely pushed into the battery compartment or is only partially positioned in the battery compartment," as required by claim 1, because Ichiba teaches that to remove the battery package, "[o]perating parts 16 on both sides [of the latching mechanism] are pressed with the thumb and index finger from both sides," and "interlocking jaw 18 moves inside, thereby releasing the interlocking with interlocking groove 28." *Id.* at 83 (citing Ex. 1010 ¶ 21) (alterations in original). According to Petitioner and Dr. Alonso, pressing operating part 16 causes spring 21 to be compressed and it "remains in this compressed state while force is applied to the clamp button and as the battery package is pulled from the UAV's battery compartment (*i.e.*, not completely pushed into the battery compartment)." *Id.* (citing Ex. 1003 ¶ 222).

Further, Petitioner asserts that when Ichiba's battery pack is installed in Saika's UAV, "'[i]nterlocking jaw 18 of hook 14 of battery pack A is pushed into interlocking groove 28' on the battery compartment." *Id.* (citing Ex. 1010 ¶ 20) (alteration in original). Petitioner asserts that during this process "the triangular wedge of the locking jaw 18 contacts and slides against a portion of the battery compartment," causing hook 14 to be pressed downward, and spring 21 to be compressed and remain compressed while the battery is in a state of not being completely pushed into the battery compartment. *Id.*

Petitioner asserts, when the battery is in a state of being completely pushed into the battery compartment, "the triangular wedge reaches the interlocking groove [and] jaw 18 has space to move outward, allowing the

hook [i.e., clamp button] to return to its original position." *Id.* at 83–84 (referring to Ex. 1010, Fig. 4b; Ex. 1003 ¶ 223). According to Petitioner, when the battery is fully inserted into the battery compartment of Saika, Saika teaches that "a locking mechanism may be triggered." *Id.* at 84 (quoting Ex. 1006 ¶ 48). Petitioner asserts that "the interlocking jaw 18 of Ichiba's hook 14 aligns with the interlocking groove 28 of the battery compartment," and once in this position, "the '[i]nterlocking jaw 18 of hook of battery pack A is pushed into interlocking groove 28 on installation part B [device] by compression spring 21 and interlocked there on the part of battery pack A which is pushed in so that battery pack A is installed securely.'" *Id.* at 85 (citing Ex. 1010 ¶ 20) (alterations in original). According to Petitioner and Dr. Alonso, that means that "when the battery package is completely pushed into the battery compartment, the compression spring pushes the clamp button outward to position interlocking jaw 18 into interlocking groove 28," rendering the battery "stuck by the cooperation of the clamping portion and the clamp button." *Id.* (citing Ex. 1003 ¶ 224) (emphasis omitted).

Petitioner and Dr. Alonso assert that "[w]hen a load is placed on a compression spring making it shorter (*e.g.*, by pushing down on of operating part 16), the spring pushes back against the load attempting to return to its original length." *Id.* (citing Ex. 1003 ¶ 225). According to Petitioner, "[t]his outward biasing of the spring in turn results in the hook 14 ('*clamp button*') returning back to its initial position," as required by claim 1. *Id.* (referring to Ex. 1010, Fig. 4b).

Petitioner asserts that a person of ordinary skill in the art would have been motivated to use Ichiba's battery latching mechanism in Saika's UAV because the skilled artisan would have recognized that Ichiba's latching

mechanism provides a more user-friendly latch than Saika, while providing a means to secure the battery in place. *Id.* at 67–69. Petitioner explains that although Ichiba's disclosure is directed to electric tools, Ichiba provides express motivation to apply its teachings to other devices, by stating that "[i]t should by no means be construed that the present invention is restricted to electric tools." *Id.* at 69 (quoting Ex. 1010 ¶¶ 2, 29).

Additionally, Petitioner asserts that the proposed combination merely represents "simple substitution of one element (Saika's latching mechanism) with another (Ichiba's secure, user-friendly latching mechanism)." *Id.* at 70 (citing Ex. 1003 ¶ 204).

Petitioner adds Phelps to the combination of Saika and Ichiba to meet additional limitations of claims 10 and 11. Claim 10 requires the UAV to comprise at least two restorable elastic pieces that are "mirror symmetric." Ex. 1001, 6:45–46. Claim 11 requires those restorable elastic pieces to have an "S-shape." *Id.* at 6:48–49. Petitioner asserts that Phelps, directed to "latching systems for battery housings," discloses both of those features in Figure 5, set forth above. *Id.* at 92. Petitioner asserts that Phelps' battery latching system includes a springy metal 30 having two portions connected to "attachment point 130" of the battery housing 20. *Id.* at 92–93. Petitioner asserts that Phelps describes the button in its latching system as moving "back and forth along the 'x' axis," i.e., being "pushed in an[d] out of the housing (20)," which Petitioner describes as being in the same direction as in Ichiba. *Id.* at 93 (quoting Ex. 1011, 3:13–16). Petitioner asserts that Phelps explains that such motions in its latching system are "translated into motions of the springy metal (30) along the 'y' axis." *Id.* (quoting Ex. 1011, 3:19–22).

According to Petitioner, a person of ordinary skill in the art would have been motivated to (a) modify Ichiba's latching system to replace Ichiba's helical springs with Phelps' springy metal 30, (b) modify Ichiba's spring receiving parts 17 and 20 to receive the ends of Phelps' flat spring 30, and (c) attach one end of each S-shape springy metal piece to the surface dividing the cavity of Ichiba's battery shell and attach the other end 150 to the inside surface of Ichiba's button, so that it is not readily moveable with respect to the button. Pet. 93–94 (citing Ex. 1003 ¶ 243). Petitioner asserts that a skilled artisan would have been motivated to incorporate those aspects of Phelps' latching system into the latching mechanism of Saika and Ichiba "to improve the form factor and usability of the battery package," because a battery pack using Phelps' springy metal can be made smaller to provide a user a better grip. *Id.* at 94 (citing Ex. 1003 ¶ 244). Further, Petitioner asserts that the proposed modification is merely a simple substitution of a helical spring for a spring metal, which would have been known and understood by a person of ordinary skill in the art. *Id.* at 95 (citing Ex. 1003 ¶ 245).

Petitioner asserts that the result of modifying Saika and Ichiba with Phelps in the manner described provides a latching system wherein the spring metal structures, i.e., restorable elastic pieces, are "mirror symmetric" and have an "S-shape," as depicted in Figure 5 of Phelps and as required by claims 10 and 11. *Id.* (citing Ex. 1003 ¶ 246).

b) Patent Owner's Contentions

Patent Owner asserts that, for the same reasons addressed regarding the combination of the Phantom 2 Manual and Kondo, a person of ordinary skill in the art "would not be motivated to modify the UAV battery of Saika in view of the power tool battery in Ichiba." PO Resp. 29. Specifically,

Patent Owner asserts that "Petitioner has not established any general shortcomings in any aspect of Saika's battery latching mechanism, nor any specific flaws" that would motivate a skilled artisan to seek to improve Saika or to consider Ichiba in doing so. *Id.* Additionally, Patent Owner asserts that a person of ordinary skill in the art would not be motivated to combine Saika and Ichiba because "Ichiba's double case design may be well suited for a hand power tool, but weight and complexity would make it unsuitable for use in a quadcopter UAV." *Id.*

Regarding the combination of Saika, Ichiba, and Phelps, Patent Owner further challenges Petitioner's motivation to combine by asserting that Petitioner has not explained how adding Phelps' springy metal might improve the form factor of Ichiba to make it more suitable for use in a quadcopter. *Id.* at 31. Additionally, Patent Owner asserts that the structure of Phelps is inconsistent with Ichiba and Saika, and teaches away from Ichiba because Phelps' clamp button does not have a second end that can be detachably coupled to the main body, and the buttons in Phelps move inwardly in a self-parallel motion and serve no latching function. *Id.* at 32. Patent Owner asserts also that a person of ordinary skill in the art would not look to Phelps, which is directed to a cellular phone battery, for a solution to latch a battery for a quadcopter UAV because those devices are subject to different service loads. *Id.*

c) Petitioner's Reply

In the Petitioner's Reply, Petitioner asserts that Patent Owner mischaracterizes Petitioner's proposed combination of Saika and Ichiba by suggesting that such combination includes combining Ichiba's double case design to Saika. Pet. Reply 18. Petitioner explains that its proposed combination only involves combining Ichiba's battery latch with Saika's

UAV battery pack. *Id.* (citing Pet. 67–68). According to Petitioner, in that combination, the weight, size and volume of Ichiba's battery pack are not relevant. *Id.* at 18–19.

Petitioner asserts that Patent Owner also mischaracterizes Phelps as being directed only to a cellular phone battery. *Id.* at 20. According to Petitioner, Phelps "relates in general to battery housings" and to "latching systems for battery housings," without limiting its application to use only in cellular phones. *Id.* (quoting Ex. 1011, 1:5–6). Additionally, Petitioner asserts that Patent Owner's argument that Phelps is inconsistent with Ichiba and Saika and teaches away from Ichiba is directed to a combination of those references not relied upon by Petitioner. *Id.* at 21. Petitioner explains that its proposed combination "replace[s] Ichiba's helical springs with Phelps' springy metal (30) and [ ] modif[ies] Ichiba's spring receiving parts 17 and 20 to receive the ends of Phelps' flat spring 30." *Id.* (quoting Pet. 93–94) (alterations in original). Petitioner asserts also that, contrary to Patent Owner's argument, the Petition explains how the form factor of Ichiba is improved by incorporating Phelps' spring metal, i.e., by making the form factor smaller so that a user can better grip and operate the buttons on the sides of the battery package. *Id.* (citing Pet. 94–95).

The remainder of Petitioner's arguments in the Reply largely mirror those arguments set forth for the ground based upon the combination of the Phantom 2 Manual and Kondo. Accordingly, we reference and incorporate those arguments here.

d) Patent Owner's Sur-Reply

In Patent Owner's Sur-Reply, Patent Owner asserts that the combination of Saika, Ichiba, and Phelps is flawed because it is unclear how motion from the axis of the button is translated to a perpendicular axis. PO

Sur-Reply 11. According to Patent Owner, that motion is translated via a cam, which does not appear to be part of Petitioner's proposed combination. *Id.* (citing Ex. 2001 ¶ 89). The remainder of Patent Owner's arguments in the Sur-Reply for these grounds rely upon the same arguments set forth for the ground based upon the combination of the Phantom 2 Manual and Kondo. Accordingly, we reference and incorporate those arguments here.

e) Discussion

Based upon our review and consideration of the arguments and evidence, we find that Petitioner demonstrates persuasively that each element of claims 1–9 and 12 are taught or suggested by the combined teachings of Saika and Ichiba, Pet. 70–92, and the additional elements of claims 10 and 11 are taught or suggest by the combined teachings of Saika, Ichiba, and Phelps, *id.* at 92–95. In particular, we find that Petitioner has demonstrated that Saika discloses a quadcopter UAV having a main body and four arms, wherein each arm is equipped with a propeller assembly, wherein the propellers are coupled with motors in the rotors. Pet. 70–72. Saika's quadcopter includes one or more removable batteries, such as a latch battery, and a cavity in the UAV "within which the latch battery 700 is mechanically inserted." Ex. 1006 ¶ 47. Saika describes the removable battery as referring to both the "electrochemical device used to store chemical energy in one or more cells," i.e., the battery body, and to the "mechanical structure, e.g., the housing surrounding the electrochemical device and/or an assembly to mechanically couple to the aerial vehicle 100," i.e., the battery shell. Ex. 1006 ¶ 39. Saika teaches that the housing of the battery may "contain mechanisms for mechanically coupling to the aerial vehicle 100 and/or mechanisms for assisting the user in attaching or detaching the battery to or from the aerial vehicle 100." *Id.* ¶ 39.

As for the claim recitations relating to the battery latching mechanism, i.e., the clamp button with a restorable elastic piece disposed on an inner side of it and the clamping portion of the battery compartment with which it detachably connects, we find that Petitioner has shown that Ichiba teaches a battery latching assembly comprising each of those elements, i.e., hooks 14 (clamp button), compression spring 21 (restorable elastic piece), and an interlocking groove 28 (clamping portion). Pet. 76–89.

Regarding claims 10 and 11, we find that Petitioner has shown that Phelps teaches a battery latching system that includes a springy metal having two portions that, in the proposed combination, meet the limitations of the recited "2 restorable elastic pieces" in those claims. Pet. 92–95.

Patent Owner does not dispute that the combination of the Saika and Ichiba teaches or suggests each limitation of claims 1–9 and 12, or that the combination of Saika, Ichiba, and Phelps teaches or suggests each limitation of claims 10 and 11. *See In re NuVasive*, 841 F.3d at 974. Nor does Patent Owner dispute that a person of ordinary skill in the art had the skill to combine those teachings with a reasonable expectation of successfully arriving at the claimed invention. *See* Paper 10, 7. Rather, the parties dispute whether a person of ordinary skill in the art would have had a reason to combine the cited references. Additionally, the parties dispute whether Patent Owner's evidence of secondary considerations supports an ultimate determination of non-obviousness. Thus, we address those disputed issues in turn.

(1) Motivation to Combine

As mentioned above, Saika discloses that its quadcopter UAV may comprise a latch battery that may include buttons used to couple and decouple the latch battery to the UAV. Ex. 1006 ¶¶ 47–49. Saika explains

that such embodiments "may allow a battery to be quickly attached to and/or removed from an aerial vehicle 100." *Id.* ¶ 49. Saika, however, does not provide any further details of the mechanisms used with the latch battery to mechanically couple to or detach from the UAV. Patent Owner argues that Petitioner has not shown that a person of ordinary skill in the art would have been motivated to modify the UAV battery of Saika with the battery latching mechanism disclosed in Ichiba because "Petitioner has not established any general shortcomings in any aspect of Saika's battery latching mechanism." PO Resp. 29. That argument, however, fails to consider that the motivation to combine may be found in a number of sources, including "the background, knowledge, creativity, and common sense of the person of ordinary skill." *ZUP, LLC*, 896 F.3d at 1371.

Based upon our review, Petitioner has set forth persuasive reasons why a person of ordinary skill in the art would have been motivated to review and combine a reference describing battery pack latching mechanisms for electronic tools, such as Ichiba, with Saika. Pet. 68–70. In particular, Petitioner explains persuasively that a person of ordinary skill in the art would have been motivated to incorporate mechanisms to make Saika's battery latch more user-friendly and easier to operate by modifying Saika with Ichiba's latch, which has features that make removing a battery easier. Pet. 68–69.

Patent Owner has not established otherwise by asserting that a person of ordinary skill in the art would not be motivated to combine Saika and Ichiba because "Ichiba's double case design may be well suited for a hand power tool, but weight and complexity would make it unsuitable for use in a quadcopter UAV." PO Resp. 29. As Petitioner has explained, its proposed combination of Saika and Ichiba does not involve using Ichiba's double case

design in Saika's UAV. Pet. Reply 18. Rather, Petitioner's combination involves combining only Ichiba's battery latching mechanism with Saika's UAV battery pack. *Id.* (citing Pet. 67–68).

Patent Owner does not set forth any additional specific challenges regarding a motivation to combine Saika and Ichiba. Instead, Patent Owner asserts that "[f]or the same reasons addressed in [its arguments challenging the obviousness ground over the Phantom 2 Manual and Kondo], a POSA would not be motivated to modify the UAV battery of Saika in view of the power tool battery in Ichiba." PO Resp. 29. We have addressed the deficiencies in those arguments above, in Section II.D.3., and incorporate them by reference here. In particular, for similar reasons to those discussed in Section II.D.3., we (a) find that Ichiba is analogous art to the challenged patent because Ichiba's teaching of a battery latching mechanism is reasonably pertinent to the battery fastening problem addressed by the '000 patent, and (b) are persuaded that modifying the Saika to include Ichiba's battery latching mechanism in place of the latching mechanism that exists on Saika would have amounted to no more than a simple substitution of one known battery latching mechanism for another.

Further, based upon our review, we determine that Petitioner has set forth persuasive reasons why a person of ordinary skill in the art would have been motivated to include Phelps in the combination of Saika and Ichiba. Pet. 93–95. For example, Petitioner explains persuasively that a person of ordinary skill in the art would have been motivated to use the S-shape springs described in Phelps in the latching mechanisms of Saika and Ichiba to improve the form factor and usability of the battery package of Saika and Ichiba. *Id.* Contrary to Patent Owner's assertion, *see* PO Resp. 31, we find that Petitioner describes how that modification provides such an

improvement. In the Petition, Petitioner explains that a battery package using Phelps' springy metal can be made smaller, thereby allowing a user to better grip and operate the button on the sides of the battery package. Pet. 94.

We also find that Patent Owner's assertion that Phelps is inconsistent with Ichiba and Saika, and teaches away from Ichiba is unsupported. PO Resp. 32. According to Patent Owner, Phelps' clamp button does not have a second end that can be detachably coupled to the main body and the buttons in Phelps move inwardly in a self-parallel motion and serve no latching function. *Id.* Petitioner explains, however, that its proposed combination provides a different result, as it "replace[s] Ichiba's helical springs with Phelps' springy metal (30) and [ ] *modif[ies] Ichiba's spring receiving parts 17 and 20 to receive the ends of Phelps' flat spring 30*." Pet. Reply 21 (quoting Pet. 93–94) (emphasis added, alterations in original).

Patent Owner asserts also that a person of ordinary skill in the art would not look to Phelps, a reference directed to a cellular phone battery, for a solution to latch a battery for a quadcopter UAV because those devices are subject to different service loads and, at the time of the invention, cell phones "tended to emphasize ruggedness and durability over lightness and portability." PO Resp. 32. Patent Owner, however, does not adequately support those alleged differences with evidence or explain sufficiently why such differences would have caused a skilled artisan not to consider or combine a spring element of the battery latching mechanism used by Phelps with the UAV and latching mechanism of Saika and Ichiba. Indeed, we find that Petitioner has demonstrated persuasively that its proposed combination amounts to a simple substitution of a helical spring for a spring metal, which would have been known and understood by a person of ordinary skill in the

art. Pet. 95. Moreover, as Petitioner correctly asserts, Phelps does not limit its latching mechanism for use only in a cellular phone. Pet. Reply 20. Rather, Phelps explains that its disclosure "relates in general to battery housings" and to "latching systems for battery housings." Ex. 1011, 1:5–6.

(2) Secondary Considerations

We continue our analysis with a discussion of Patent Owner's asserted secondary considerations of nonobviousness. Patent Owner asserts that evidence of long-felt, but unsolved need in the industry and failure of others supports a finding of non-obviousness. PO Resp. 33–34. Patent Owner relies on the same arguments and evidence to support those assertions here as it did for the ground based on the Phantom 2 Manual and Kondo. Accordingly, for the same reasons discussed regarding that ground, *see* Section II.D.3., we find that the evidence submitted does not demonstrate that the challenged claims satisfied a long-felt unmet need or addressed a failure of others so as to support a finding of nonobviousness.

(3) Conclusions as to Obviousness

We base our final determination regarding obviousness upon an analysis of the foregoing arguments and evidence. In particular, we have considered the secondary considerations of nonobviousness and accorded them appropriate weight along with all of the other *Graham* factors. Accordingly, based upon the preponderance of the evidence, we conclude that claims 1–9 and 12 of the '000 patent are unpatentable as obvious over a combination of Saika and Ichiba, and that claims 10 and 11 of the '000 patent are unpatentable as obvious over a combination of Saika, Ichiba, and Phelps.

F. Indefiniteness

Petitioner asserts that claims 1–12 are indefinite under 35 U.S.C. § 112(b). Pet. 95–100. Patent Owner disagrees. PO Resp. 35–39.

1. Petitioner's Contentions

Petitioner asserts that independent claim 1 is indefinite because it does not sufficiently "inform a person of ordinary skill in the art of the scope of the claim with reasonable certainty and is therefore indefinite." Pet. 96 (quoting *SAP America Inc. v. Lakshmi Arunachalum*, CBM2013-00013, Paper 61 at 11 (PTAB Sept. 18, 2014)). Claim 1 recites, in part, that the "clamp button is configured to cause the restorable elastic piece to be pressed down in a first state where the battery assembly is not completely pushed into the battery compartment or is only partially positioned in the battery compartment." Ex. 1001, 6:4–8. Petitioner asserts that the scope of "not completely pushed into" or "partially positioned in" in reference to the battery position in the battery compartment is unclear because a battery with only a small portion of the end of its package inserted into the battery compartment may be considered as "not completely pushed into," and yet the restorable elastic piece would not be pressed down as required by the claim. Pet. 96–97.

Further, Petitioner asserts that when the battery is not completely pushed into the battery compartment, the battery cannot simultaneously be considered to be "detachably coupled to the main body," as required by claim 1. *Id.*

Petitioner asserts that "claim 1 is also indefinite because it covers both an apparatus and the use of that apparatus by a user," as the claim "recites two 'wherein' clauses [] tied to the operation of the UAV's battery latching mechanism." Pet. 97. Petitioner asserts that although the claim recites

passive language such as "the clamp button is configured" and the "restorable elastic piece is configured," a person having ordinary skill in the art "would recognize that the recited operation limitations of claim 1 do not rely on the configuration of either the clamp button or the restorable elastic piece but instead rely on the user's action of inserting or removing the battery from the battery compartment of the UAV." *Id.*

Specifically, regarding the recitation in claim 1, "wherein the clamp button is configured to cause the restorable elastic piece to be pressed down in a first state," Petitioner asserts that "the clamp button, on its own, is incapable of causing the restorable elastic piece to be pressed down because it is merely connected to ('fixed with') the restorable elastic piece." *Id.* According to Petitioner, the clamp button is not "working autonomously to press down the restorable elastic piece," but instead "it is the actions of a user, by applying a lateral force that pushes or positions the battery in the battery compartment or by applying a downward force to the clamp button that causes the 'restorable elastic piece to be pressed down in a first state.'" *Id.* at 97–98 (quoting Ex. 1003 ¶ 249) (emphasis omitted). Petitioner asserts that a person of ordinary skill in the art "would understand the claim limitation to mean 'wherein the user causes the clamp button to apply a downward force on the restorable elastic piece to press down (compress) the restorable elastic piece.'" *Id.* at 98.

Regarding the recitation in claim 1, "wherein a second state where the batter[y] is completely pushed or positioned into the battery compartment, the restorable elastic piece is configured to automatically rebound," Petitioner asserts that this limitation also requires user action because this "second state cannot occur until after the restorable elastic piece has been pressed down (*e.g.*, by the action of a user pressing the clamp button) so that

the spring can later elongate (or 'rebound')." *Id.* at 99 (citing Ex. 1003 ¶ 250). According to Petitioner, "[i]t is unclear whether infringement of claim 1 occurs when the UAV with the recited battery latching mechanism is created or when a user actually uses the UAV's battery latching mechanism by inserting or removing a battery from the UAV." *Id.* at 100 (citing Ex. 1003 ¶ 251).

2. Patent Owner's Contentions

Patent Owner challenges Petitioner's assertion that claims 1–12 are indefinite because they allegedly insert method steps into an apparatus claim by reciting two "wherein" clauses tied to the operation of the UAV's battery latching mechanism. PO Resp. 36. Patent Owner contends that the challenged claims are not indefinite because they are "directed to the capability of a system in a specific state and the environment in which the structures operate." *Id.* at 37 (citing *Microprocessor Enhancement Corp. v. Texas Instruments Inc.*, 520 F.3d 1367, 1374 (Fed. Cir. 2008)). In particular, Patent Owner asserts that the use of the phrases "configured to," "in a first state," "in a second state," and "able to" in independent claim 1 "indicate that the claims are directed to the capability of a system in a specific state and the environment in which the structures operate." *Id.* at 37–38.

Patent Owner also challenges Petitioner's contention that the limitation "not completely pushed into the battery compartment or is only partially positioned in the battery compartment," recited in claim 1 is unclear and renders the claim indefinite. PO Resp. 38. In particular, Patent Owner asserts that Petitioner's contention that when the battery is not completely pushed into the battery compartment, the battery cannot simultaneously be "detachably coupled to the main body" is untrue. *Id.* According to Patent Owner, the claim contemplates the existence of states where the battery

assembly is "not completely pushed into" or "only partially positioned in" the battery compartment, while the restorable elastic piece is not pressed down. *Id.* at 39. Patent Owner asserts, "[b]ecause a POSA would be reasonably informed as to the scope of the claims, they are not indefinite." *Id.* (citing Ex. 2001 ¶¶ 101–102).

3. Discussion

Based on our review of the arguments and evidence, we are persuaded, for the reasons discussed by Patent Owner, that independent claim 1 is permissibly directed to the UAV battery latching mechanism in a specific state and the environment in which the structures operate and does not impermissibly insert method steps into an apparatus claim by reciting "wherein" clauses tied to the operation of the UAV's battery latching mechanism. *See Microprocessor Enhancement*, 520 F.3d at 1374.

Further, based upon our review of the record, we determine that Petitioner has not shown persuasively that claims 1–12 are indefinite based upon an asserted lack of clarity in the scope of claim terms. Rather, we conclude that the preponderance of the evidence demonstrates that the claims, when read in light of the Specification, adequately inform those skilled in art, with reasonable certainty, about the scope of the invention. In particular, we credit Dr. Reinholtz's unrebutted testimony that

> When read in context, the plain meaning of "not completely pushed into" and "partially positioned in" the battery compartment is clear. The full context of claim 1 explains that "the clamp button is configured to cause the restorable elastic piece to be pressed down in a first state where the battery is not completely pushed into the battery compartment or is only partially positioned in the battery compartment." Thus, the claim contemplates the existence of *other* states where the battery assembly is also "not completely pushed into" or "only partially positioned in" the battery compartment, but the restorable elastic

> piece is not pressed down. This claim makes it clear that the clamp button can cause the restorable elastic piece to be pressed down at *some* state (but not necessarily *every* state) when the battery is being positioned into the battery compartment. This is useful for allowing the battery to be installed in the battery compartment without requiring the user to press down on the clamp button.

Ex. 2001 ¶ 102 (citing Ex. 1001, 5:7–25).

III. CONCLUSION[7]

For the foregoing reasons, we conclude Petitioner has demonstrated by a preponderance of the evidence that claims 1–12 of the '000 patent are unpatentable. The results are summarized below in the table.

IV. ORDER

In consideration of the foregoing, it is hereby:

ORDERED that claims 1–12 of U.S. Patent No. 9,979,000 B2 have been shown to be unpatentable; and

FURTHER ORDERED that, because this is a Final Written Decision, any party to this proceeding seeking judicial review of the decision must comply with the notice and service requirements of 37 C.F.R. § 90.2.

---

[7] Should Patent Owner wish to pursue amendment of the challenged claims in a reissue or reexamination proceeding subsequent to the issuance of this decision, we draw Patent Owner's attention to the April 2019 *Notice Regarding Options for Amendments by Patent Owner Through Reissue or Reexamination During a Pending AIA Trial Proceeding*. *See* 84 Fed. Reg. 16,654 (Apr. 22, 2019). If Patent Owner chooses to file a reissue application or a request for reexamination of the challenged patent, we remind Patent Owner of its continuing obligation to notify the Board of any such related matters in updated mandatory notices. *See* 37 C.F.R. § 42.8(a)(3), (b)(2).

In summary:

Claims	35 U.S.C. §	Reference(s)/Basis	Claims Shown Unpatentable	Claims Not shown Unpatentable
1–12	103	Phantom 2 Manual, Kondo	1–12	
1–9, 12	103	Saika, Ichiba	1–9, 12	
10, 11	103	Saika, Ichiba, Phelps	10, 11	
1–12	112(b)	Indefiniteness		1–12
Overall Outcome			1–12	

PETITIONER:

Lori A. Gordon
Steve W. Peters
Matthew Edward Carey
KING & SPALDING LLP
lgordon@kslaw.com
speters@kslaw.com
mcarey@kslaw.com

PATENT OWNER:

John L. Abramic
Timothy C. Bickham
Matthew Bathon
Harold H. Fox
Katherine D. Cappaert
Katherine H. Johnson
STEPTOE & JOHNSON LLP
jabramic@steptoe.com
tbickham@steptoe.com
mbathon@steptoe.com
hfox@steptoe.com
kcappaert@steptoe.com
kjohnson@steptoe.com