US 20180035510A1

(19) United States
(12) Patent Application Publication
Doheny et al.
(10) Pub. No.: US 2018/0035510 A1
(43) Pub. Date: Feb. 1, 2018

(54) **CONFIGURABLE LIGHTING SYSTEM**

(71) Applicant: **Cooper Technologies Company**, Houston, TX (US)

(72) Inventors: **Seth Doheny**, Newman, GA (US); **Steven Walter Pyshos**, Peachtree City, GA (US)

(21) Appl. No.: **15/727,833**

(22) Filed: **Oct. 9, 2017**

Related U.S. Application Data

(63) Continuation-in-part of application No. 15/435,141, filed on Feb. 16, 2017, now Pat. No. 9,820,350.

(60) Provisional application No. 62/297,424, filed on Feb. 19, 2016.

Publication Classification

(51) **Int. Cl.**

H05B 33/08	(2006.01)
F21S 8/02	(2006.01)
F21V 17/12	(2006.01)
F21V 19/00	(2006.01)
F21V 5/04	(2006.01)
F21V 7/00	(2006.01)
F21V 23/06	(2006.01)
H05B 37/02	(2006.01)
F21V 23/00	(2006.01)

(52) **U.S. Cl.**

CPC ***H05B 33/0863*** (2013.01); ***H05B 37/0272*** (2013.01); ***F21S 8/026*** (2013.01); ***H05B 33/0845*** (2013.01); ***F21V 17/12*** (2013.01); ***F21V 23/001*** (2013.01); ***F21V 5/04*** (2013.01); ***F21V 7/00*** (2013.01); ***H05B 33/089*** (2013.01); ***F21V 23/06*** (2013.01); ***F21V 19/0015*** (2013.01); *F21Y 2115/10* (2016.08)

(57) **ABSTRACT**

A luminaire can include a power supply that receives AC mains power from a power source and delivers intermediate power, and can also include a lumen control module coupled to the power supply, where the lumen control module receives the intermediate power from the power source. The lumen control module can include at least one first switch that has multiple positions, and multiple resistors coupled to the at least one first switch, where each position of the at least one first switch corresponds to a resistance of the resistors, where the intermediate power received by the resistors is translated to a current level of a plurality of current levels based on the resistance. The luminaire can also include at least one light source coupled to the lumen control module, where the at least one light source emits a lumen output based on the current level received from the lumen control module.

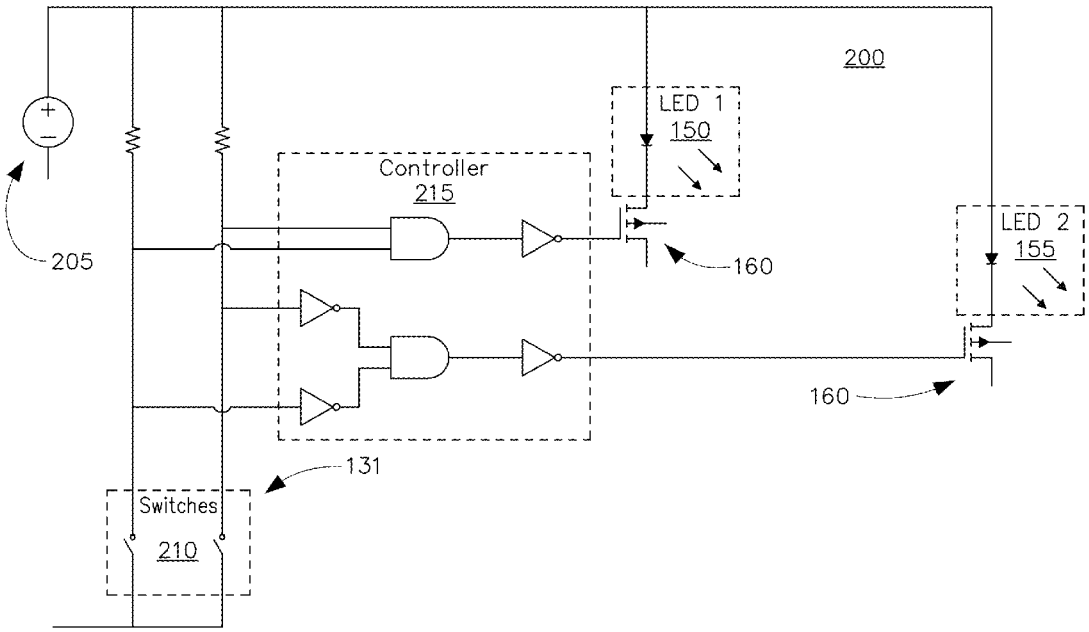

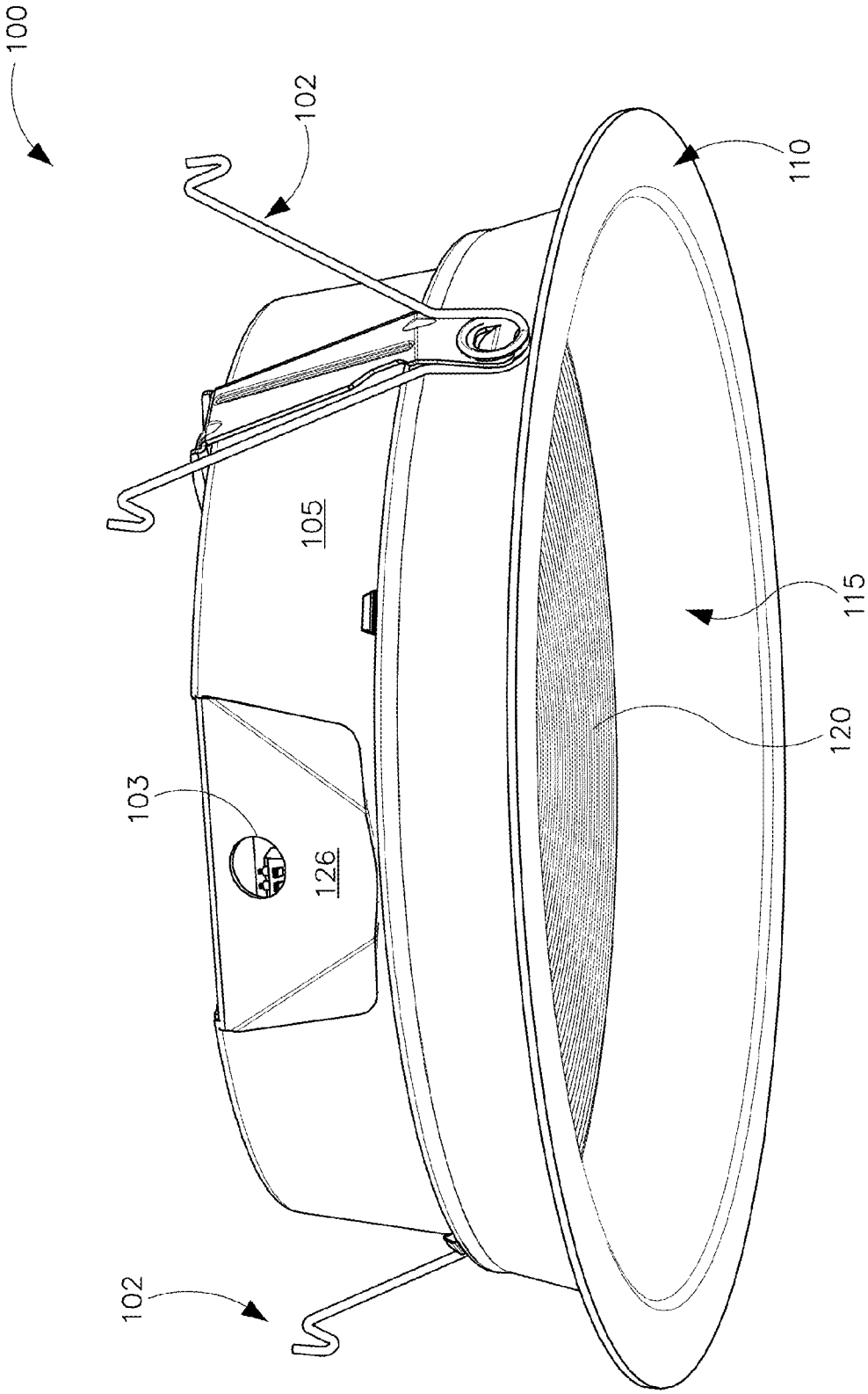

FIG. 1A

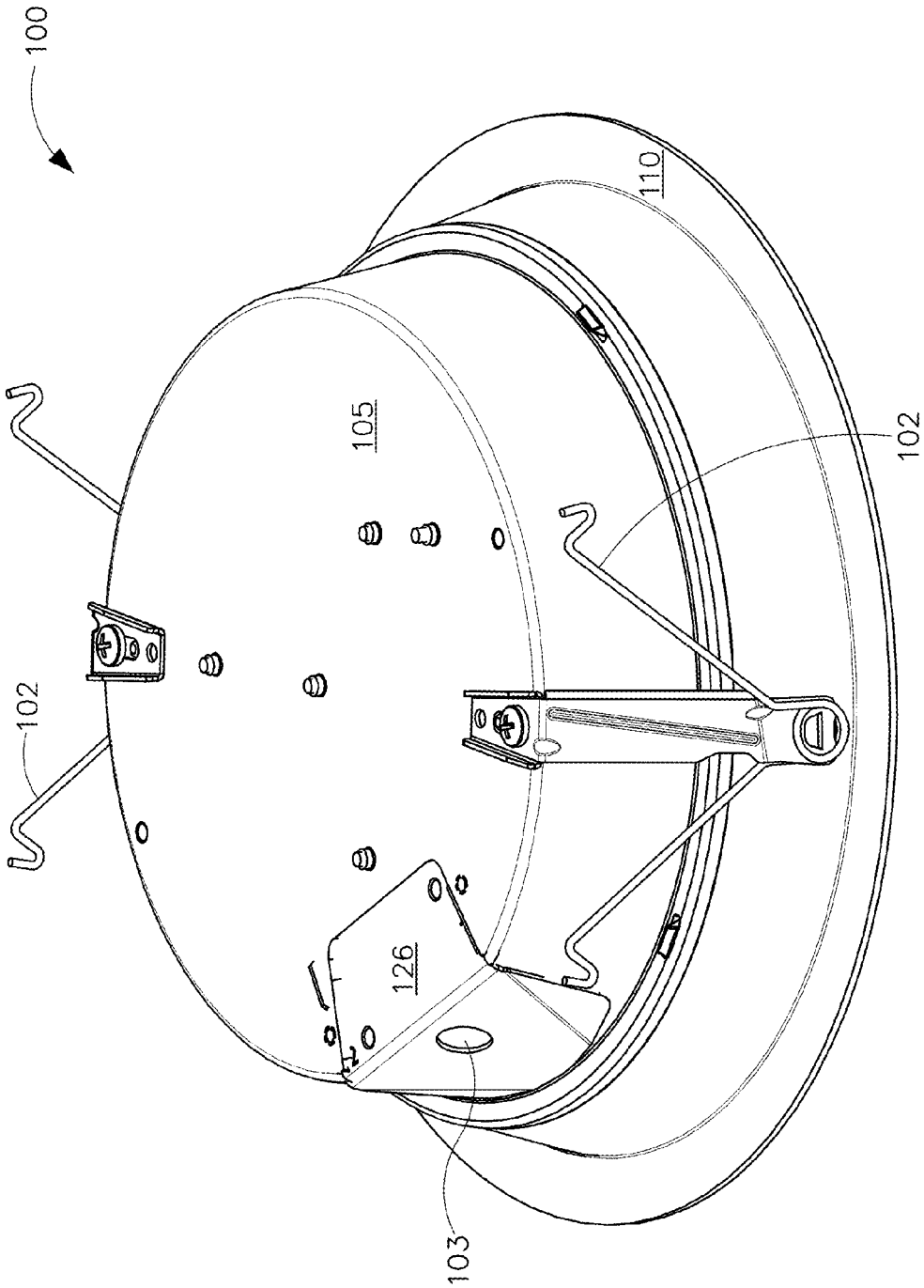

FIG. 1B

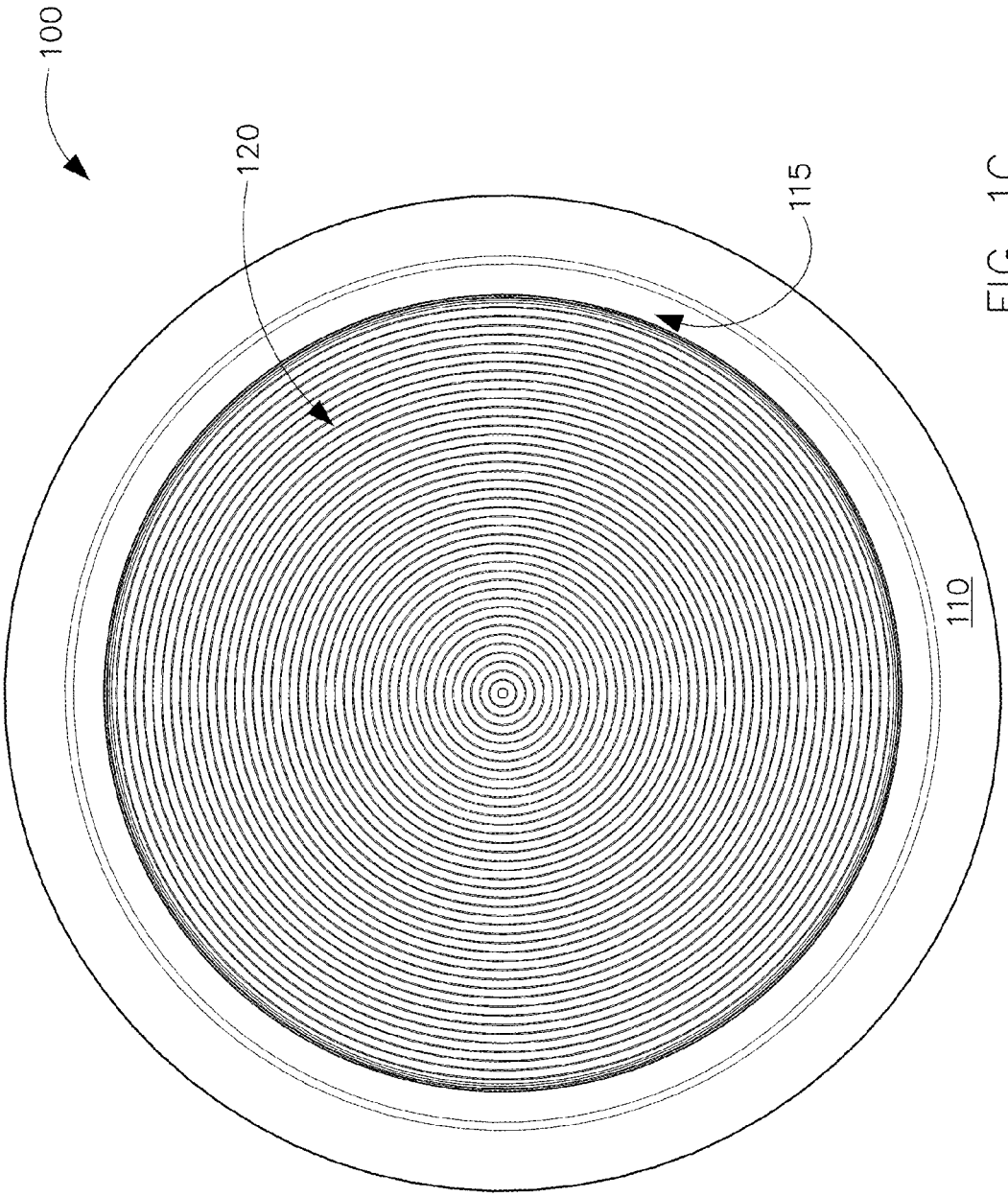

FIG. 1C

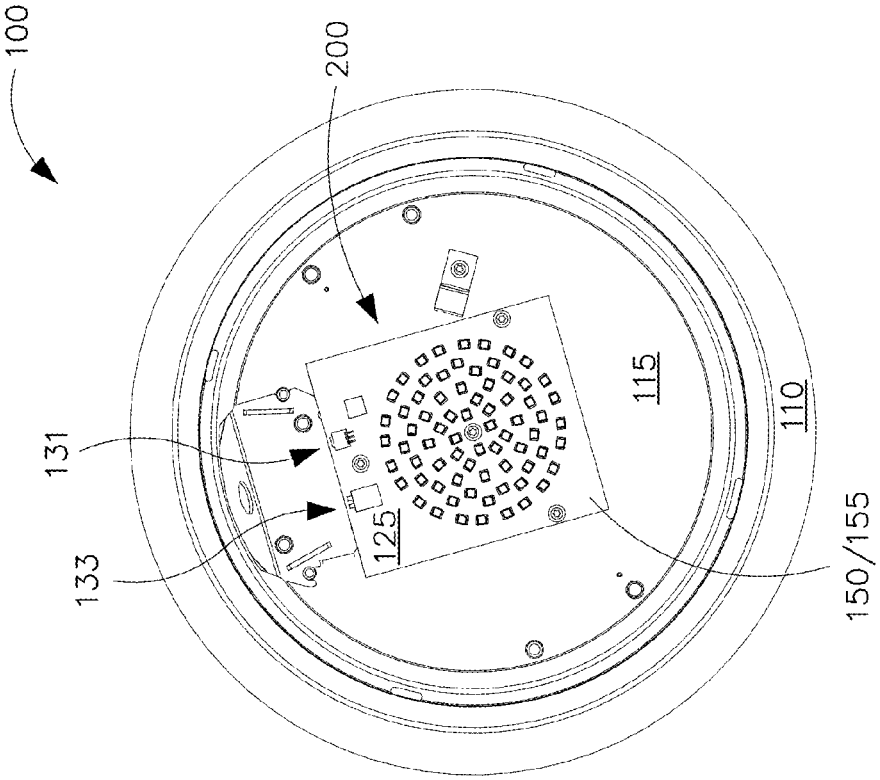

FIG. 1E

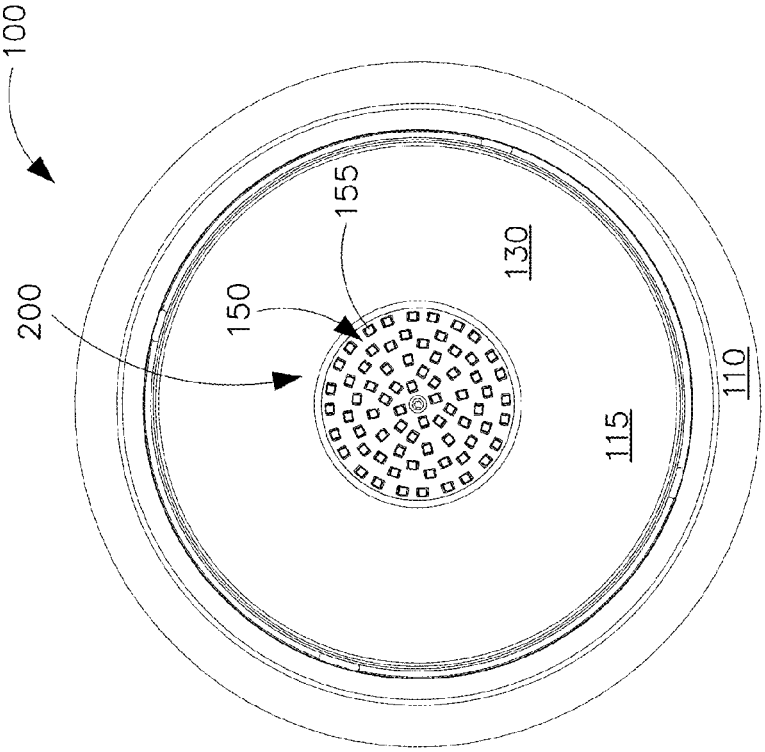

FIG. 1D

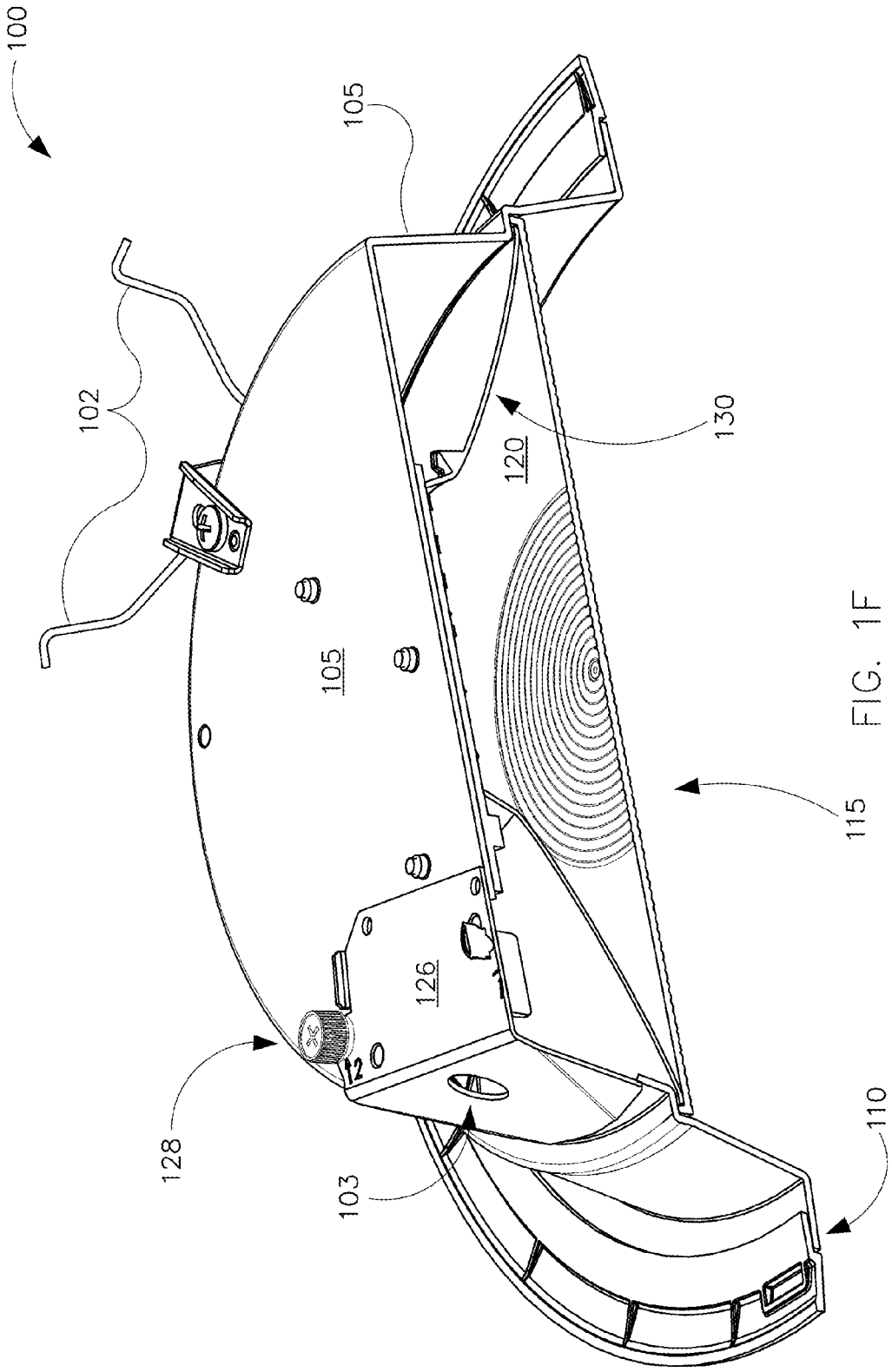

FIG. 1F

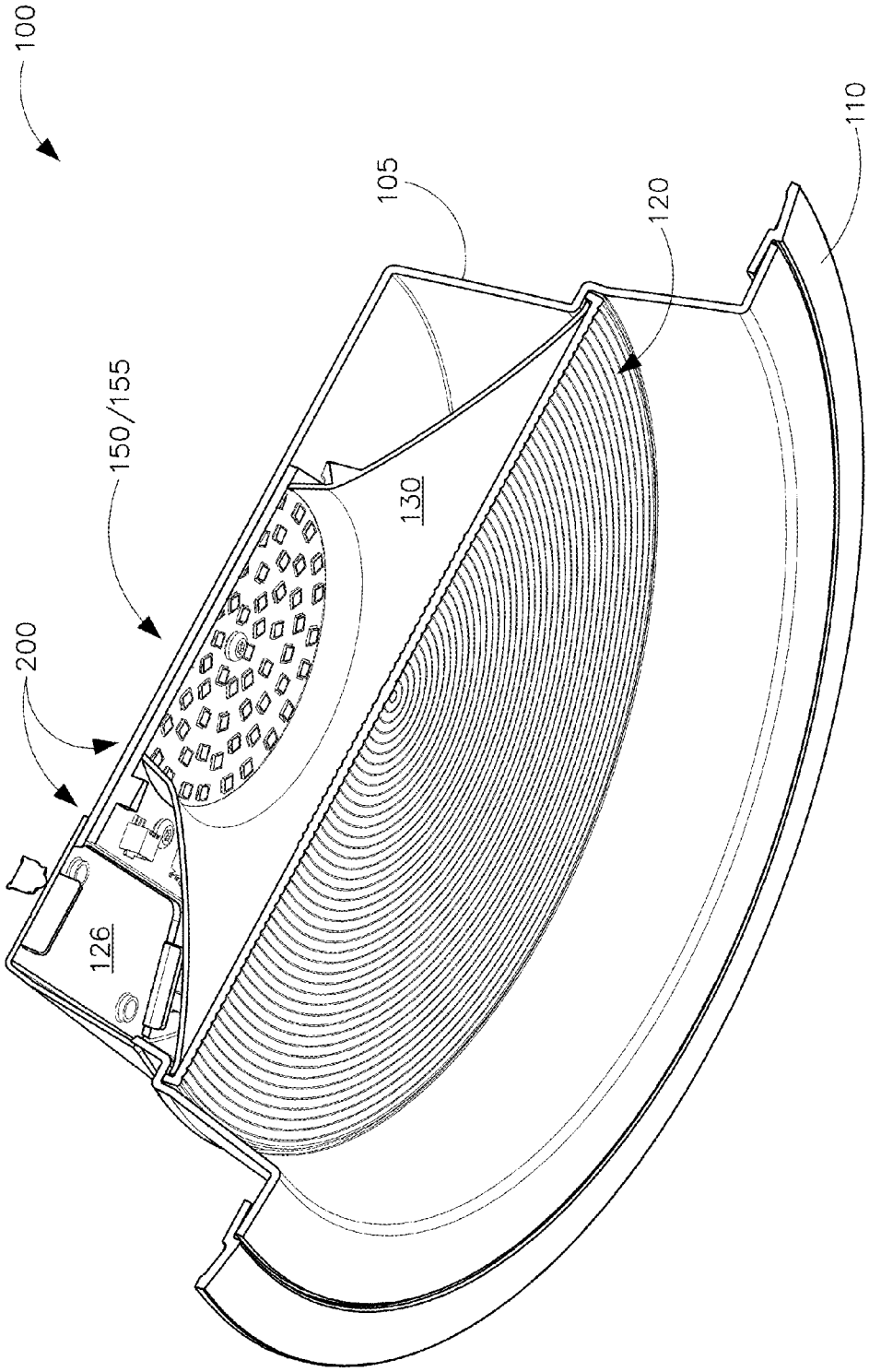

FIG. 1G

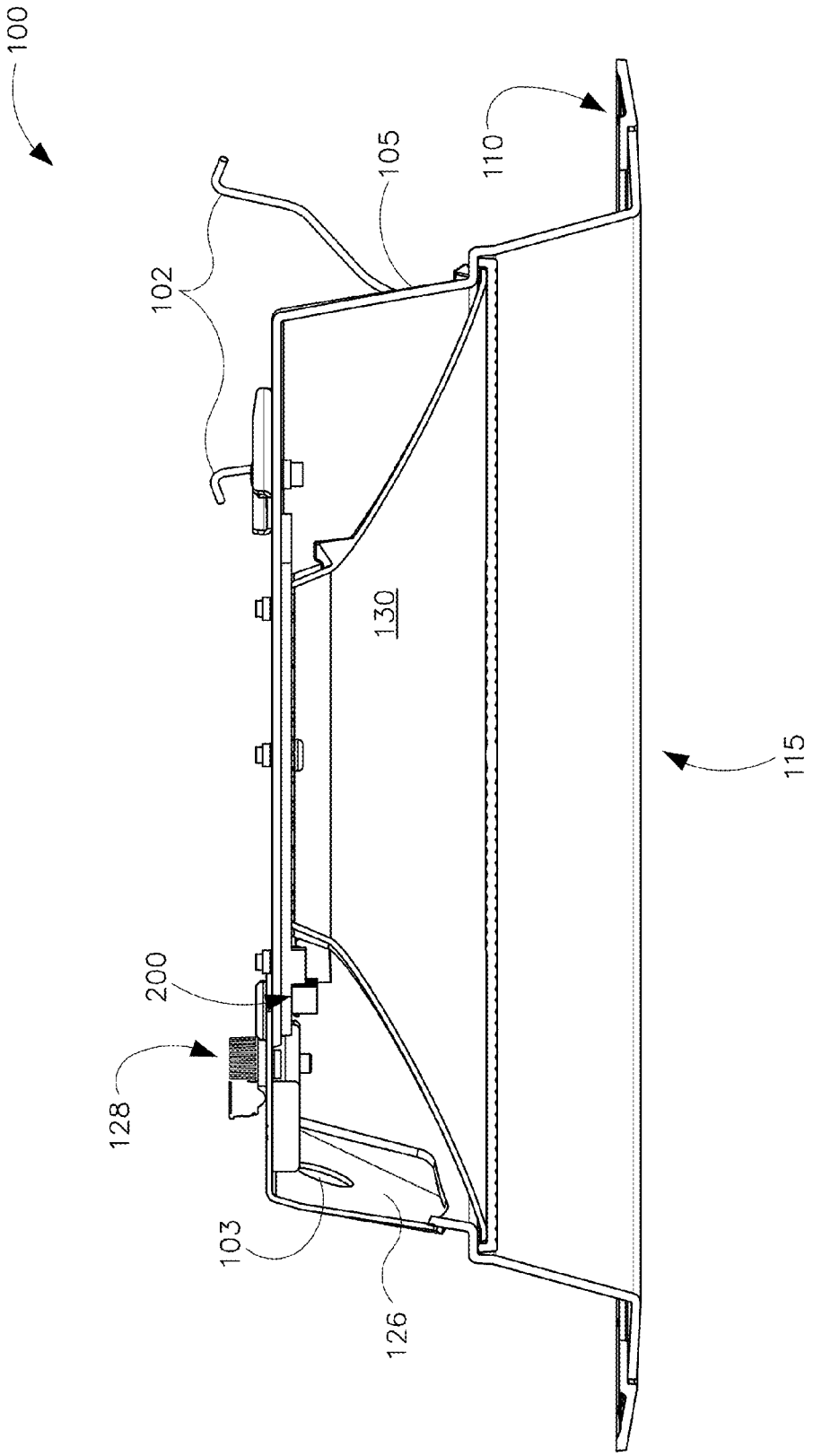

FIG. 1H

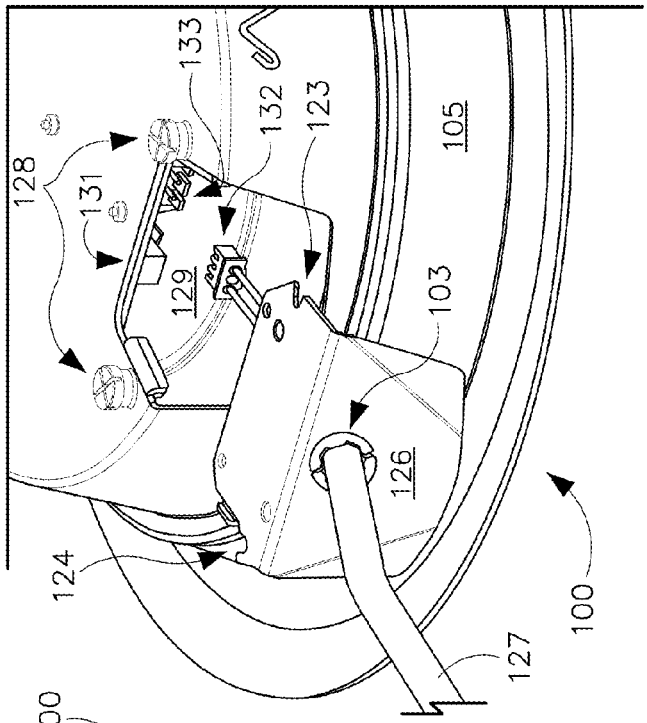

FIG. 1I

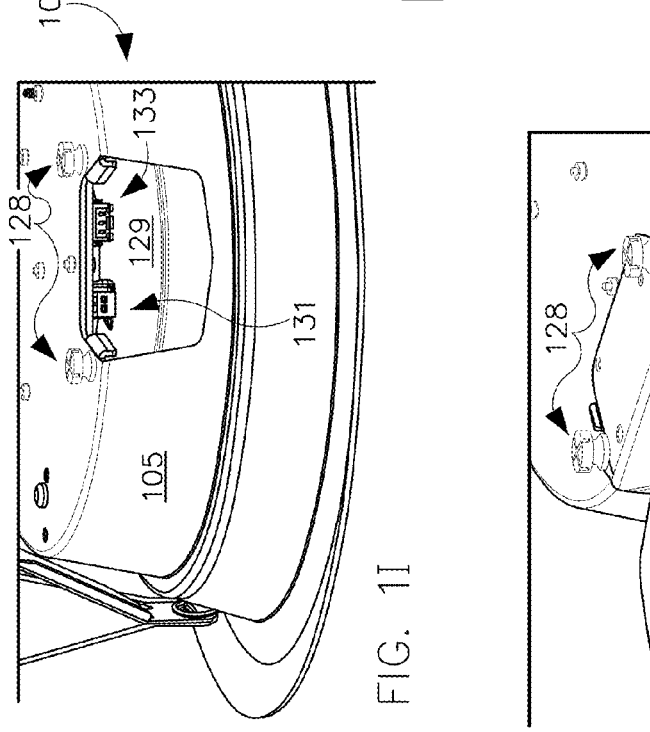

FIG. 1J

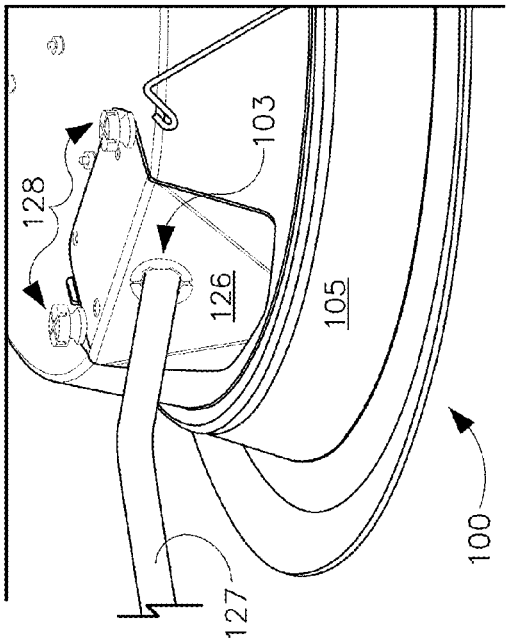

FIG. 1K

FIG. 2

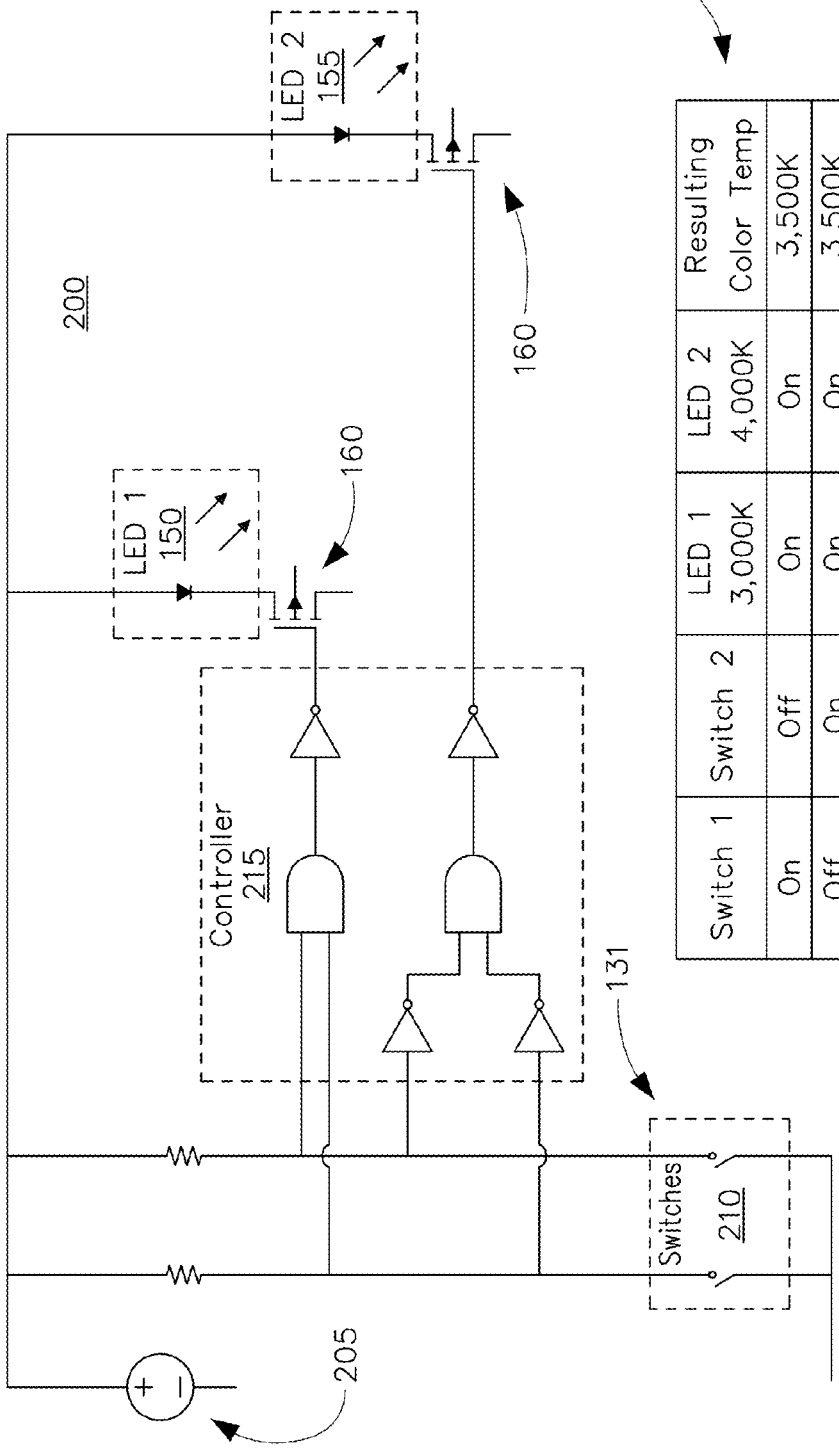

300

FIG. 3

Switch 1	Switch 2	LED 1 3,000K	LED 2 4,000K	Resulting Color Temp
On	Off	On	On	3,500K
Off	On	On	On	3,500K
On	On	On	Off	3,000K
Off	Off	Off	On	4,000K

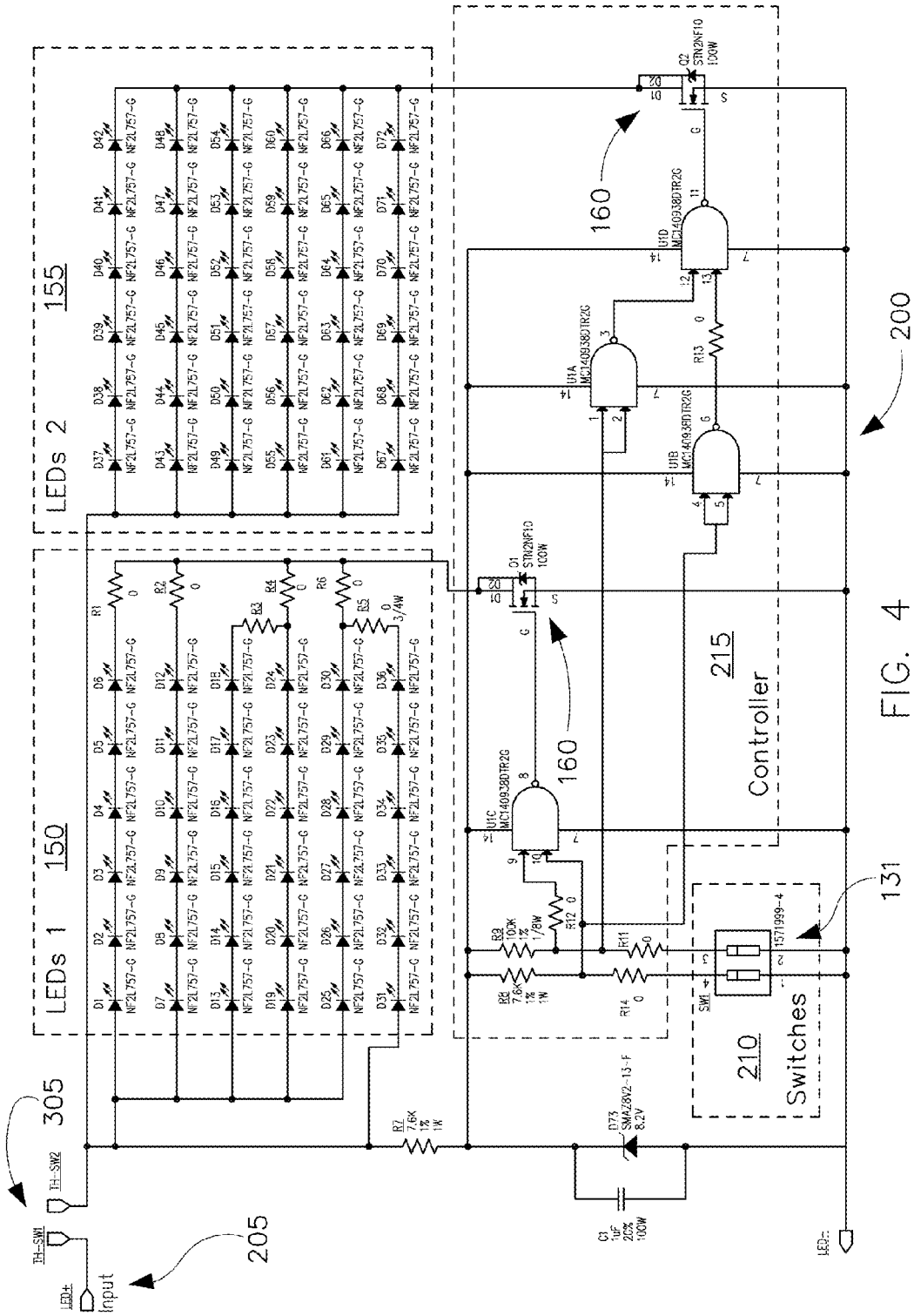
LEDs 1
150
LEDs 2
155
Controller
215
Switches
210
160
160
200
131
305
205
Input
TH-SW1
TH-SW2
LED+
LED-
NF2L757-G
MC14093BDTR2G
STN2NF10
100W
1571999-4
SMAZ8V2-13-F
8.2V
C1
1uF
20%
100W
R7
7.6K
1%
1W
R8
7.6K
1%
1W
R9
100K
1%
1/8W
R11
0
R12
0
R13
0
R14
0
R1
0
R2
0
R3
0
R4
0
R5
0
3/4W
R6
0
Q1
Q2
D1
D2
D3
D4
D5
D6
D7
D8
D9
D10
D11
D12
D13
D14
D15
D16
D17
D18
D19
D20
D21
D22
D23
D24
D25
D26
D27
D28
D29
D30
D31
D32
D33
D34
D35
D36
D37
D38
D39
D40
D41
D42
D43
D44
D45
D46
D47
D48
D49
D50
D51
D52
D53
D54
D55
D56
D57
D58
D59
D60
D61
D62
D63
D64
D65
D66
D67
D68
D69
D70
D71
D72
D73
U1A
U1B
U1C
U1D
SW1

FIG. 4

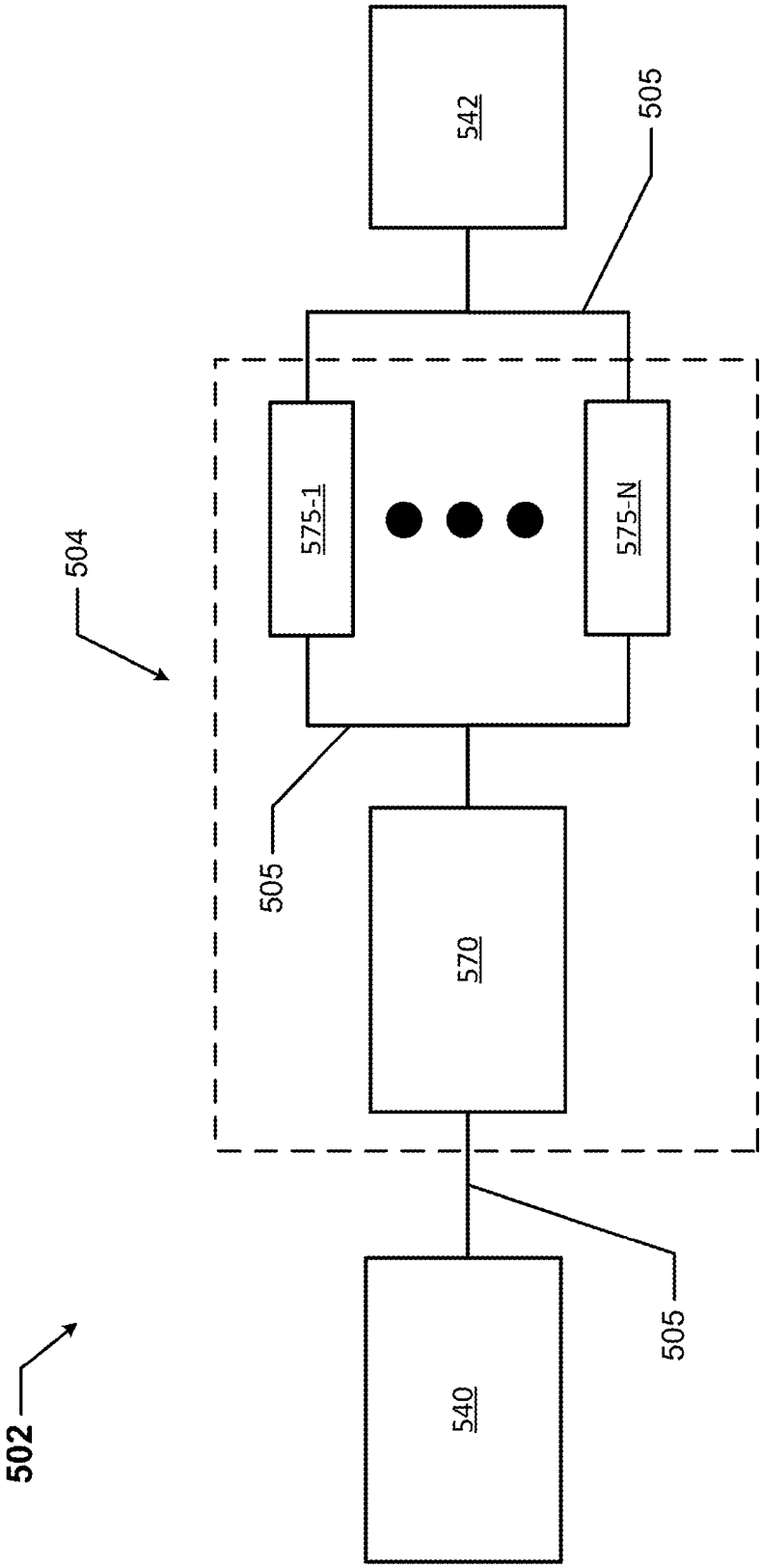

FIG. 5

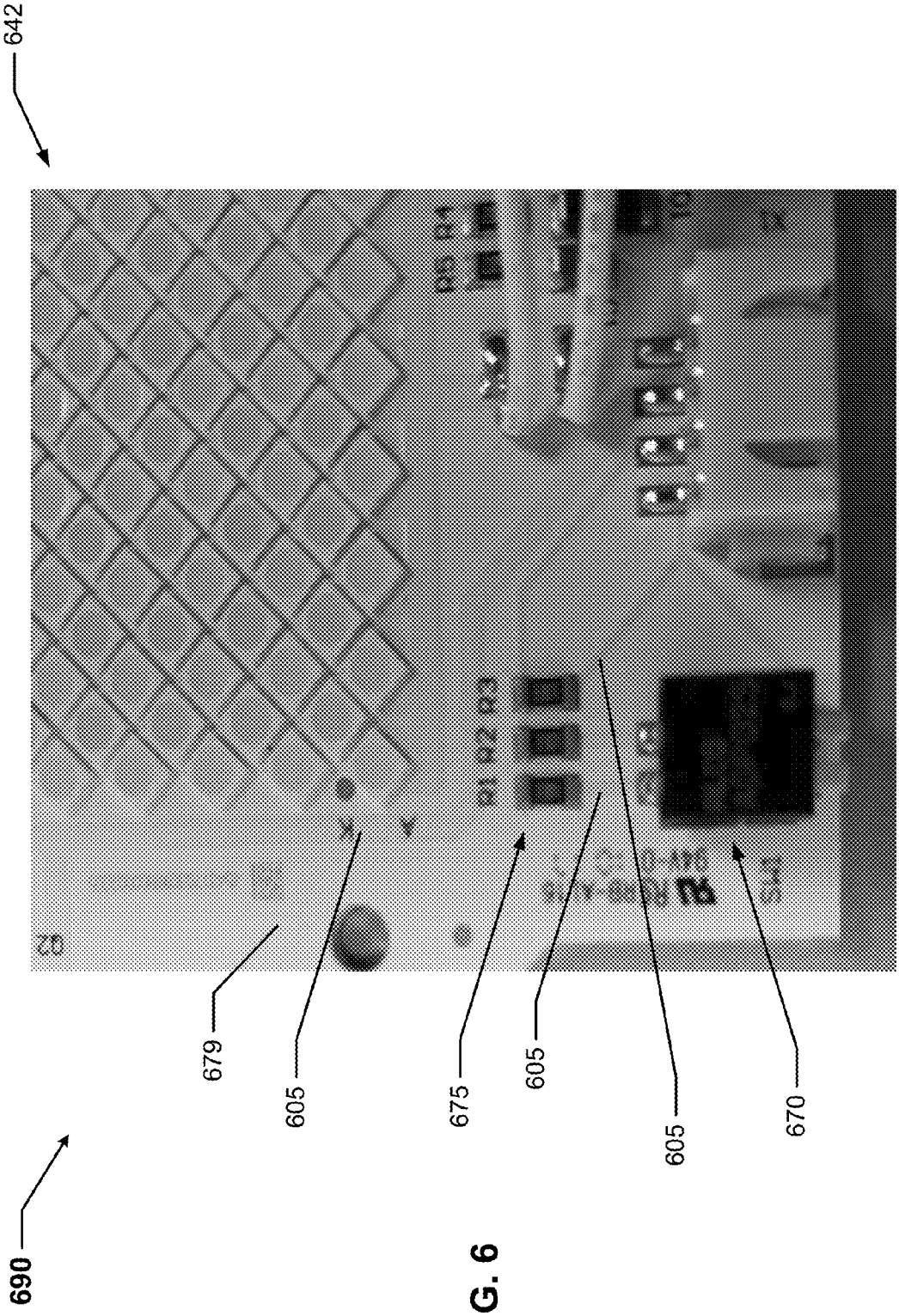

FIG. 6

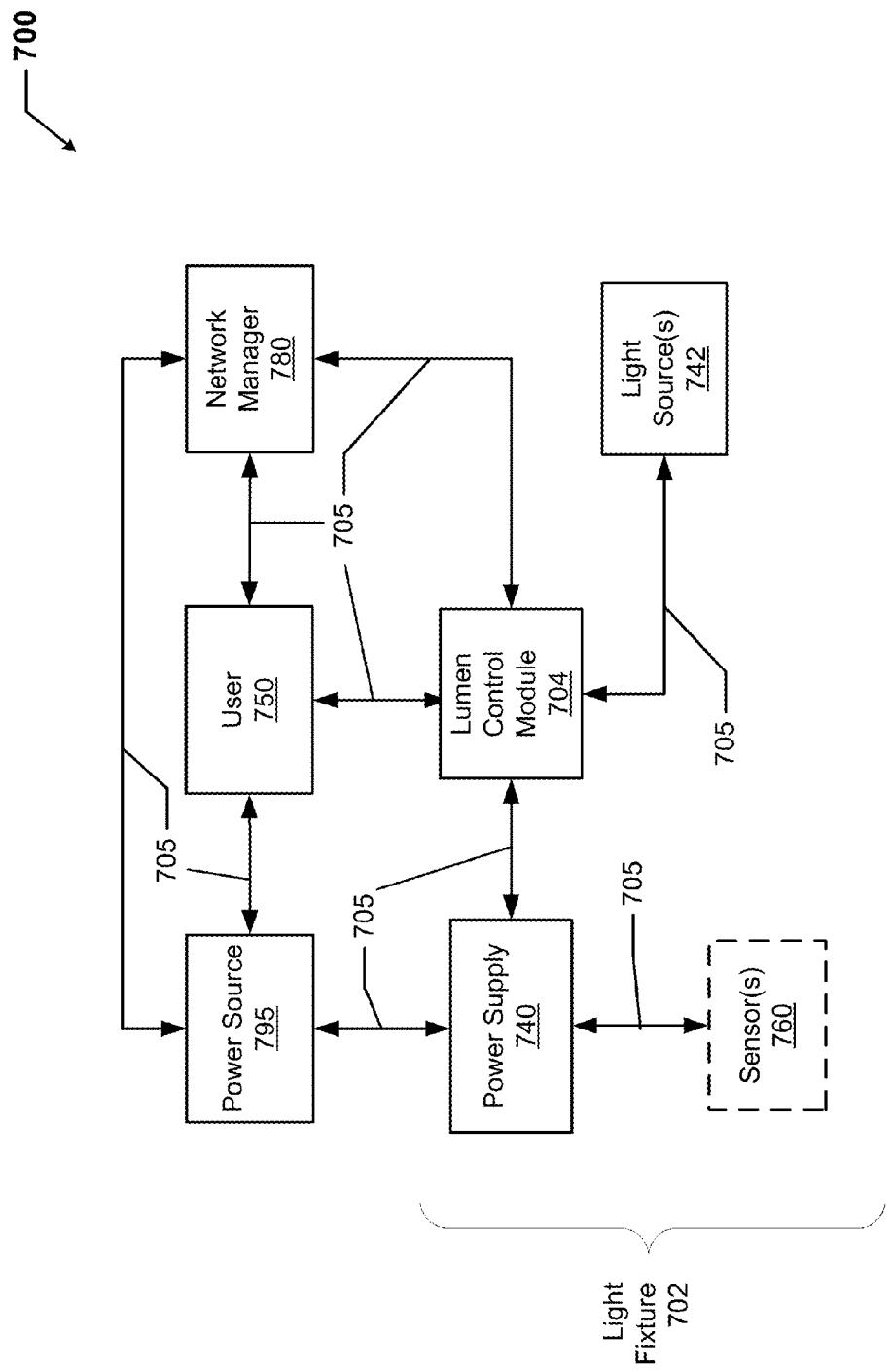
700
Network Manager 780
User 750
Power Source 795
Lumen Control Module 704
Power Supply 740
Light Source(s) 742
Sensor(s) 760
705
705
705
705
705
Light Fixture 702

FIG. 7A

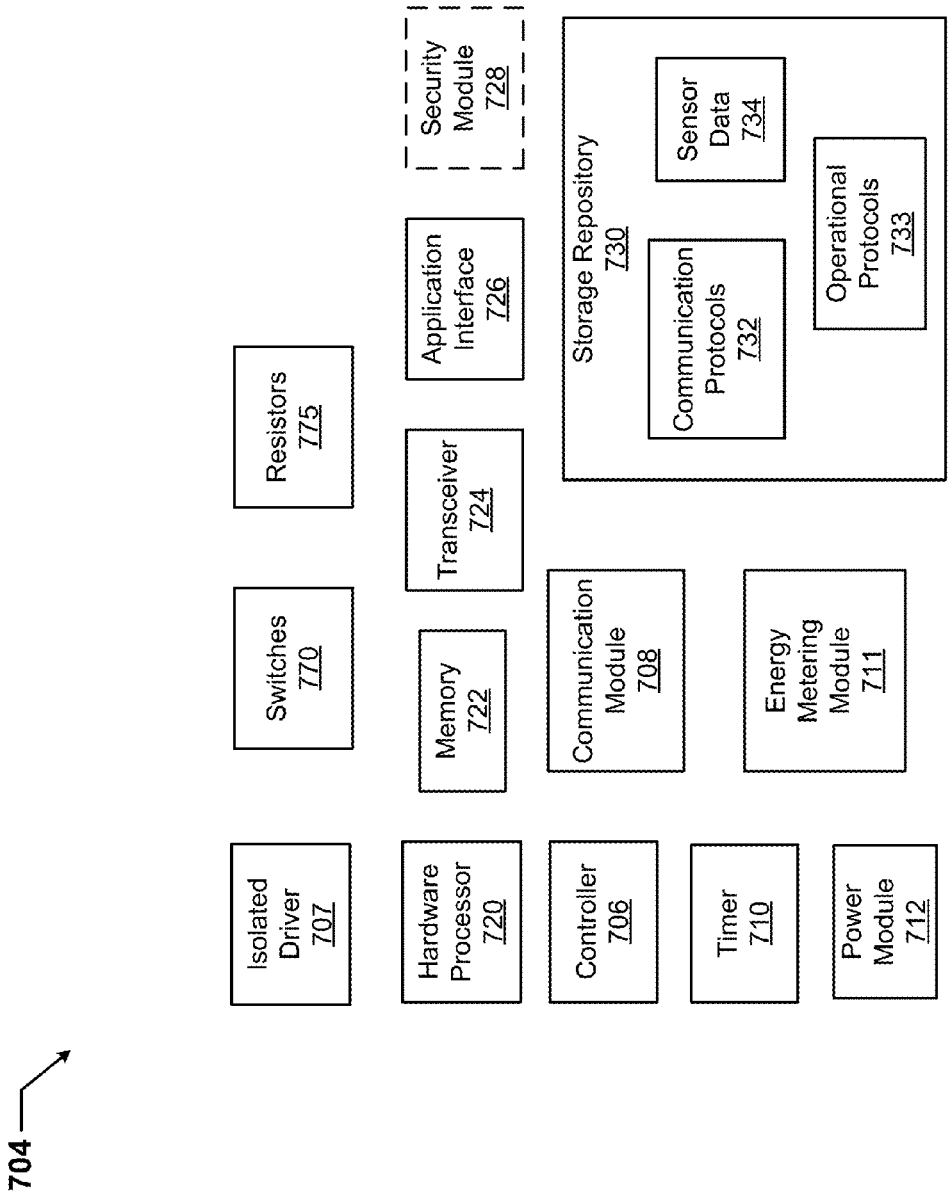
704
Isolated Driver 707
Switches 770
Resistors 775
Hardware Processor 720
Memory 722
Transceiver 724
Application Interface 726
Security Module 728
Controller 706
Communication Module 708
Storage Repository 730
Communication Protocols 732
Sensor Data 734
Operational Protocols 733
Timer 710
Energy Metering Module 711
Power Module 712

FIG. 7B

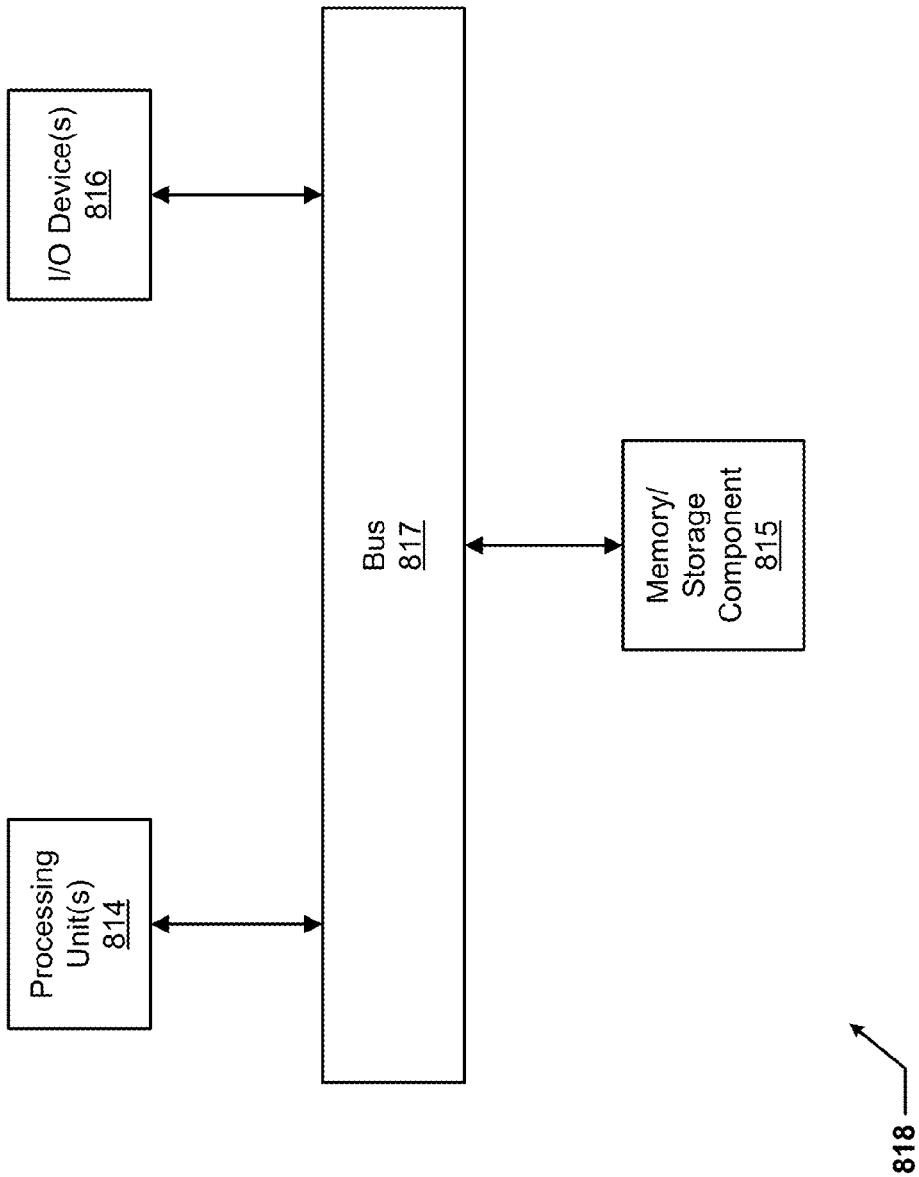
I/O Device(s)
816
Processing
Unit(s)
814
Bus
817
Memory/
Storage
Component
815
818

FIG. 8

CONFIGURABLE LIGHTING SYSTEM

CROSS REFERENCE TO RELATED APPLICATIONS

[0001] This application is a continuation-in-part of and claims priority to U.S. patent application Ser. No. 15/435,141, titled "Configurable Lighting System" and filed on Feb. 16, 2017, which claims priority to U.S. Provisional Patent Application No. 62/297,424 filed Feb. 19, 2016, in the name of Steven Walter Pyshos and Raymond Janik and entitled "Configurable Lighting System". The entire contents of these aforementioned applications are hereby incorporated herein by reference.

TECHNICAL FIELD

[0002] Embodiments of the technology relate generally to lighting systems and more specifically to lighting systems that can be readily configured to produce illumination of different color temperatures.

BACKGROUND

[0003] For illumination applications, light emitting diodes (LEDs) offer substantial potential benefit associated with their energy efficiency, light quality, and compact size. However, to realize the full potential benefits offered by light emitting diodes, new technologies are needed.

[0004] With luminaires that incorporate incandescent or fluorescent technology, some flexibility can be obtained by swapping lamps to meet user preferences. In such luminaires, lamp selection can provide flexibility in terms of correlated color temperature (CCT or color temperature) and light output (lumen output). For example, a compact fluorescent downlight might accept 6-, 32-, and 42-watt lamps in 2700, 3000, and 3500 K CCT. Additionally, changing lamp position and focal point in a reflector of an incandescent or fluorescent fixture can change the fixture spacing criteria (SC) of a luminaire.

[0005] In contrast, conventional light-emitting-diode-based luminaires typically offer reduced flexibility when the luminaire's light-emitting-diode-based light source is permanently attached to the luminaire. Stocking conventional light-emitting-diode-based luminaires at distribution to accommodate multiple configurations that users may desire can entail maintaining a relatively large or cumbersome inventory.

[0006] Need is apparent for a technology to provide a light emitting diode system that can adapt to various applications, for example by delivering multiple color temperatures, multiple lumens, and/or multiple photometric distributions. Need further exists for a capability to enable a single luminaire to be stocked at distribution and then quickly configured according to application parameters and deployment dictates. Need further exists for luminaires that are both energy efficient and flexible. A capability addressing one or more such needs, or some other related deficiency in the art, would support improved illumination systems and more widespread utilization of light emitting diodes in lighting applications.

SUMMARY

[0007] In some aspects of the disclosure, a system can configure a luminaire for providing illumination of a selected color temperature, a selected lumen output, or a selected photometric distribution based on an input. The input may be field selectable or may be selectable at a distribution center or at a late stage of luminaire manufacture, for example.

[0008] In some aspects of the disclosure, the luminaire can comprise at least two light sources having different color temperatures. In a first configuration, the luminaire can produce illumination of a first color temperature using a first one of the light sources. In a second configuration, the luminaire can produce illumination of a second color temperature using a second one of the light sources. In a third configuration, the luminaire can produce illumination of a third color temperature using both of the first and second the light sources. The third color temperature may be between the first and second color temperatures. The value of the third color temperature within a range between the first and second color temperatures can be controlled by manipulating the relative amounts of light output by the first and second light sources. That is, adjusting the lumen outputs of the first and second light sources can define the color temperature of the illumination produced by the luminaire in the third configuration.

[0009] In some aspects of the disclosure, the luminaire can comprise at least two light sources having different lumen outputs. In a first configuration, the luminaire can produce illumination of a first lumen output using a first one of the light sources. In a second configuration, the luminaire can produce illumination of a second lumen output using a second one of the light sources. In a third configuration, the luminaire can produce illumination of a third lumen output using both of the first and second light sources.

[0010] In some aspects of the disclosure, the luminaire can comprise at least two light sources having different photometric distributions. In a first configuration, the luminaire can produce illumination of a first photometric distribution using a first one of the light sources. In a second configuration, the luminaire can produce illumination of a second photometric distribution using a second one of the light sources. In a third configuration, the luminaire can produce illumination of a third photometric distribution using both of the first and second light sources.

[0011] In some aspects of the disclosure, a circuit and an associated input to the circuit can configure a luminaire for providing illumination having a selected property, for example a selected color temperature, a selected lumen output, or a selected photometric distribution. The input can be settable to a first number of states. The circuit can map the first number of states into a second number of states that is less than the first number of states. For example, the input can have four states and the circuit can map these four states into three states. The three states can correspond to three different values of the illumination property, for example three different color temperatures, three different lumen outputs, or three different photometric distributions.

[0012] The foregoing discussion of controlling illumination is for illustrative purposes only. Various aspects of the present disclosure may be more clearly understood and appreciated from a review of the following text and by reference to the associated drawings and the claims that follow. Other aspects, systems, methods, features, advantages, and objects of the present disclosure will become apparent to one with skill in the art upon examination of the following drawings and text. It is intended that all such aspects, systems, methods, features, advantages, and objects

are to be included within this description and covered by this application and by the appended claims of the application.

BRIEF DESCRIPTION OF THE DRAWINGS

[0013] FIGS. **1**A, **1**B, **1**C, **1**D, **1**E, **1**F, **1**G, **1**H, **1**I, **1**J, and **1**K (collectively FIG. **1**) illustrate views of a luminaire in accordance with some example embodiments of the disclosure.

[0014] FIG. **2** illustrates a functional block diagram of a circuit that a luminaire can comprise in accordance with some example embodiments of the disclosure.

[0015] FIG. **3** illustrates a state table for a circuit that a luminaire can comprise in accordance with some example embodiments of the disclosure.

[0016] FIG. **4** illustrates a schematic of a circuit that a luminaire can comprise in accordance with some example embodiments of the disclosure.

[0017] FIG. **5** shows a system diagram of a light fixture in accordance with certain example embodiments.

[0018] FIG. **6** shows a portion of a circuit board assembly of a light fixture with lumen control in accordance with certain example embodiments.

[0019] FIGS. **7**A and **7**B show a system that includes a light fixture and a lumen control module in accordance with certain example embodiments.

[0020] FIG. **8** shows a computing device in accordance with certain example embodiments.

[0021] Many aspects of the disclosure can be better understood with reference to the above drawings. The drawings illustrate only example embodiments and are therefore not to be considered limiting of the embodiments described, as other equally effective embodiments are within the scope and spirit of this disclosure. The elements and features shown in the drawings are not necessarily drawn to scale, emphasis instead being placed upon clearly illustrating principles of the embodiments. Additionally, certain dimensions or positionings may be exaggerated to help visually convey certain principles. In the drawings, similar reference numerals among different figures designate like or corresponding, but not necessarily identical, elements.

DETAILED DESCRIPTION OF EXAMPLE EMBODIMENTS

[0022] In some example embodiments of the disclosure, a luminaire can comprise multiple groups of light emitting diodes of different color temperatures and a constant current power supply for powering the light emitting diodes. The power supply can utilize a switching scheme that can turn each group of light emitting diodes on and off to change the color temperature of the luminaire. In some example embodiments, the power supply can further vary the relative intensities of the light emitting diodes to manipulate the color temperature of the luminaire within a range.

[0023] For example, the luminaire can comprise a 3,000 K group of light emitting diodes and a 4,000 K group of light emitting diodes. When only the 3,000 K group is on, the luminaire can deliver 3,000 K illumination. When only the 4,000 K group is on, the luminaire can deliver 4,000 K illumination. When the 3,000 K group and the 4,000 K group are both on, the luminaire can deliver 3,500 K illumination. If the 4,000 K group of light emitting diodes is concurrently operated at a low lumen output and the 3,000 K group is operated at a high lumen output, the luminaire may deliver illumination of another selected color temperature, for example 3,100 K.

[0024] In some example embodiments, a controller can adjust lumen output automatically to maintain constant delivered lumens across multiple color temperatures or to suit application requirements. The controller implements the adjustment utilizing programmable driver current and/or via turning on and off various groups of light emitting diodes. Configurable color temperature or lumen output can function in combination with integral dimming, for example to facilitate interface with building automation, sensors, and dimmers.

[0025] In some example embodiments, luminaires can achieve an additional level of flexible configuration at a distribution center using interchangeable optics. For example, primary optics can provide medium distribution (e.g. spacing criteria equals 1.0), while a diffuser or concentrator lens can be used to achieve wide distribution (e.g. spacing criteria equals 1.4), and narrow distribution (e.g. spacing criteria equals 0.4).

[0026] In some example embodiments, a luminaire's configuration of delivered lumens and color temperatures can be set at the factory, at distribution, or in the field. To meet current and emerging code compliance, performance markings on a luminaire can indicate and correspond to the desired setting. Economical, field-installed nameplates can identify the various electrical and optical performance ratings and, when installed, permanently program the delivered lumens and color temperature. Other settings, such as dimming protocols, can likewise be configured. The interface between the nameplate and internal logic can use mechanical, electrical or optical means, for example.

[0027] Accordingly, in some embodiments of the disclosure, the technology provides product markings and supports regulatory compliance. For example, nameplates can indicate energy codes and rebate opportunities, for compliance with product labeling and to facilitate compliance confirmation by local authorities who may have jurisdiction. Further, luminaires that include example switches can be subject to meeting certain standards and/or requirements. For example, Underwriters Laboratories (UL), the National Electric Code (NEC), the National Electrical Manufacturers Association (NEMA), the International Electrotechnical Commission (IEC), the Federal Communication Commission (FCC), the Illuminating Engineering Society (IES), and the Institute of Electrical and Electronics Engineers (IEEE) set standards as to luminaires. Use of example embodiments described herein meet (and/or allow a corresponding luminaire to meet) such standards when required.

[0028] If a component of a figure is described but not expressly shown or labeled in that figure, the label used for a corresponding component in another figure can be inferred to that component. Conversely, if a component in a figure is labeled but not described, the description for such component can be substantially the same as the description for the corresponding component in another figure. Further, a statement that a particular embodiment (e.g., as shown in a figure herein) does not have a particular feature or component does not mean, unless expressly stated, that such embodiment is not capable of having such feature or component. For example, for purposes of present or future claims herein, a feature or component that is described as not being included in an example embodiment shown in one or more particular

drawings is capable of being included in one or more claims that correspond to such one or more particular drawings herein.

[0029] Example embodiments of configurable lighting systems will be described more fully hereinafter with reference to the accompanying drawings, in which example embodiments of configurable lighting systems are shown. Configurable lighting systems may, however, be embodied in many different forms and should not be construed as limited to the example embodiments set forth herein. Rather, these example embodiments are provided so that this disclosure will be thorough and complete, and will fully convey the scope of configurable lighting systems to those of ordinary skill in the art. Like, but not necessarily the same, elements (also sometimes called components) in the various figures are denoted by like reference numerals for consistency.

[0030] Terms such as "first", "second", "third", "fourth", "fifth", "top", "bottom", "side", and "within" are used merely to distinguish one component (or part of a component or state of a component) from another. Such terms are not meant to denote a preference or a particular orientation, and are not meant to limit embodiments of configurable lighting systems. In the following detailed description of the example embodiments, numerous specific details are set forth in order to provide a more thorough understanding of the invention. However, it will be apparent to one of ordinary skill in the art that the invention may be practiced without these specific details. In other instances, well-known features have not been described in detail to avoid unnecessarily complicating the description.

[0031] Referring now to FIG. **1**, multiple views of the luminaire **100** are shown. FIG. **1**A illustrates a side perspective view of the luminaire **100**. FIG. **1**B illustrates a top perspective view of the luminaire **100**. FIG. **1**C illustrates a view of the light-emitting bottom of the luminaire **100**, showing a lens **120** in a light-emitting aperture **115** of the luminaire **100**. FIG. **1**D illustrates a view of the light-emitting bottom of the luminaire **100** with the lens **120** removed from the light-emitting aperture **115** of the luminaire. FIG. **1**E illustrates a view of the light-emitting bottom of the luminaire **100** with the lens **120** and an associated reflector **130** removed from the light-emitting aperture **115** of the luminaire. FIG. **1**F illustrates a cutaway perspective view of the luminaire **100**. FIG. **1**G illustrates another cutaway perspective view of the luminaire **100**. FIG. **1**H illustrates another cutaway view of the luminaire **100**. FIGS. **1**I, **1**J, and **1**K provide detailed views of a portion of the luminaire **100** comprising a cover **126** and an associated access aperture **129** for providing internal access to the luminaire **100**. In FIG. **1**I, the cover **126** is fully removed. In FIG. **1**J, the cover **126** is positioned adjacent the access aperture **129**, for example in connection with attachment or removal of the cover **126**. In FIG. **1**K, the cover **126** is attached to the luminaire **100**.

[0032] As best seen in the views of FIGS. **1**A and **1**B, the illustrated example luminaire **100** is suited for inserting in an aperture in a ceiling to provide overhead lighting. In this example embodiment, the luminaire **100** can be characterized as an overhead light or a recessed ceiling light. Various other indoor and outdoor luminaires that may be mounted in a wide range of orientations can be substituted for the luminaire **100** illustrated in FIG. **1**.

[0033] The illustrated example luminaire **100** of FIG. **1** comprises a housing **105** that is circular with a protruding trim **110** that extends circumferentially about the housing **105**. When the luminaire **100** is installed in a ceiling aperture, the rim **100** circumscribes and covers the edge of the ceiling aperture for aesthetics, for support, and for blocking of debris from above the ceiling. Hanger clips **102** hold the luminaire **100** in place in installation.

[0034] As best illustrated in FIGS. **1**I, **1**J, and **1**K, the example luminaire **100** comprises an access aperture **129** and an associated cover **126**. The access aperture **129** provides access to the interior of the luminaire housing **105**, for example in the field and/or during luminaire installation. An installer can remove the cover **126** and manually set a dual inline pin (DIP) switch **131** to configure the luminaire **100** for long-term operation providing illumination with a selected color temperature, a selected lumen output, and/or a selected photometric distribution. As illustrated, the dual inline pin switch **131** is mounted on a circuit board adjacent the access aperture **129**, thereby facilitating convenient and efficient access in the field or at a distribution center, for example.

[0035] An electrical cable **127** extends through a wiring aperture **103** in the cover **126**. The electrical cable **127** terminates in a plug **132** that mates with a receptacle **133** that is mounted inside the housing **105** adjacent the access aperture **129** for convenient field access.

[0036] As illustrated, the example cover **126** comprises two notches **123**, **124** that each receives a respective screw **128** for holding the cover **126** in place. The notch **123** is disposed on the right side of the cover **126** and is sized to receive one of the screws **128**. Meanwhile, the notch **124** is disposed on a left side of the cover **126** and is sized to receive the other screw **128**.

[0037] The left notch **124** and the right notch **123** are oriented so that the cover **126** is rotatable about the right screw **128** when the right screw **128** is loosely disposed in the right notch **123**. In other words, cover rotation can occur when the right screw **128** is in the right notch **123** with threads engaged but prior to tightening. In this position, the cover **126** can rotate clockwise about the right screw **128**. Thus, the right screw **128** provides an axis of rotation for the cover **126**. This clockwise rotation facilitates convenient manipulation of the cover **126** by a person working the cover **126** to cover the access aperture **129**, with the screws **128** engaged but not fully tightened. The clockwise rotation of the cover **126** about the right screw **128** provides the person with a capability to slide the left notch **124** of the cover **126** conveniently under the head of the left screw **128**. Once the cover **126** is rotated so the left notch **124** is under the head of the left screw **128**, the person (for example an installer) can tighten the two screws **128** to secure the cover **126**.

[0038] To remove the cover **126**, the person loosens the two screws **128** and then rotates the cover **126** counterclockwise about the right screw **128** so that the left notch **124** moves out from under the head of the left screw **128**. Once the left notch **124** is free from the left screw **128**, the installer can pull the right notch **123** out from under the right screw **128** to fully remove the cover **126**.

[0039] As best seen in the views of FIGS. **1**A, **1**C, **1**F, and **1**G, the lens **120** of the luminaire **100** is positioned adjacent the lower, exit side of the light-emitting aperture **115**. As illustrated, the lens **120** can mix and blend light emitted by two groups of light emitting diodes **150**, **155**, with each

group having a different color temperature. In some embodiments, the two groups of light emitting diodes **150**, **155** may have color temperatures that differ by at least 500 Kelvin, for example. The group of light emitting diodes **150** can be characterized as one light emitting diode light source, while the group of light emitting diodes **155** can be characterized as another light emitting diode light source. Other embodiments of a light emitting diode light source may have a single light emitting diode or more light emitting diodes than the embodiment illustrated in FIG. **1**. A reflector **130** is disposed in and lines the aperture **115** to guide and manage the emitted light between the light emitting diodes **150**, **155** and the lens **120**. In some embodiments, an upper lens (not illustrated) replaces the reflector **130**.

[0040] The light emitting diodes **150**, **155** are mounted on a substrate **125**, for example a circuit board, and form part of a circuit **200**. In the illustrated embodiment, the light emitting diodes **150**, **155** are interspersed. In other embodiments, the light emitting diodes **150**, **155** may be separated from one another or spatially segregated according to color temperature or other appropriate parameter. As discussed in further detail below, the circuit **200** supplies electricity to the light emitting diodes **150**, **155** with a level of flexibility that facilitates multiple configurations suited to different applications and installation parameters.

[0041] Turning to FIGS. **2**, **3**, and **4**, some example embodiments of the circuit **200** will be discussed in further detail with example reference to the luminaire **100**. The circuit **200** can be applied to other indoor and outdoor luminaires.

[0042] Referring now to FIG. **2**, this figure illustrates an embodiment of the circuit **200** in an example block diagram form. The circuit **200** comprises a DC power supply **205** for supplying electrical energy that the circuit **200** delivers to the light emitting diodes **150**, **155**. In an example embodiment, the circuit **200** comprises a light emitting diode driver.

[0043] The dual inline pin switch **131** comprises individual switches **210** that provide an input for configuring the luminaire **100** to operate at a selected color temperature. In the illustrated embodiment, the circuit **200** comprises two manual switches **210**. Other embodiments may have fewer or more switches **210**. In various embodiments, the switches **210** can be mounted to the housing **105** of the luminaire **100**, for example within the housing **105** (as illustrated in FIG. **1** and discussed above) or on an exterior surface of the housing **105**. In some embodiments, the switches **210** are mounted on the substrate **125**. In some embodiments, the switches **210** are implemented via firmware or may be solid state.

[0044] As an alternative to the illustrated dual inline pin switch **131**, the input can comprise multiple DIP switches, one or more single in-line pin packages (SIP or SIPP), one or more rocker switches, one or more reed switches, one or more magnetic switches, one or more rotary switches, one or more rotary dials, one or more selectors or selector switches, one or more slide switches, one or more snap switches, one or more thumbwheels, one or more toggles or toggle switches, one or more keys or keypads, or one or more buttons or pushbuttons, to mention a few representative examples without limitation.

[0045] As further discussed below, a controller **215** operates the light emitting diodes **150**, **155** according to state of the switches **210**. In some example embodiments, the controller **215** comprises logic implemented in digital circuitry, for example discrete digital components or integrated circuitry. In some example embodiments, the controller **215** utilizes microprocessor-implemented logic with instructions stored in firmware or other static or non-transitory memory.

[0046] In the illustrated embodiment, the outputs of the controller **215** are connected to two metal-oxide-semiconductor field-effect transistors (MOSFETs) **160** to control electrical flow through two light emitting diodes **150**, **155**. The illustrated MOSFETs **160** provide one example and can be replaced with other appropriate current control devices or circuits in various embodiments. The switches **210** thus configure the luminaire **100** to operate with either or both of the light emitting diodes **150**, **155**. The light emitting diodes **150**, **155** illustrated in FIG. **2** may represent two single light emitting diodes or two groups of light emitting diodes, for example.

[0047] FIG. **3** illustrates a representative table **300** describing operation of the circuit **100** according to some example embodiments. In the example of FIG. **3**, the light emitting diode **150** produces light having a color temperature of 3,000 Kelvin, and the light emitting diode **155** produces light having a color temperature of 4,000 Kelvin.

[0048] As shown in the example table **300**, when both of the switches **210** are in the on state, the controller **215** causes the light emitting diode **155** to be off and the light emitting diode **150** to be on. Accordingly, the luminaire **100** emits illumination having a color temperature of 3,000 Kelvin.

[0049] When both of the switches **210** are in the off state, the controller **215** causes the light emitting diode **155** to be on and the light emitting diode **150** to be off. Accordingly, the luminaire **100** emits illumination having a color temperature of 4,000 Kelvin.

[0050] When one of the switches **210** is in the off state and the other of the switches **210** is on the on state, the controller **215** causes the light emitting diode **155** to be on and the light emitting diode **150** to be on. The luminaire **100** thus emits illumination having a color temperature of 3,500 Kelvin. In some other example embodiments, the controller **215** can adjust the light output of one or both of the light emitting diodes **150**, **155** to set the color temperature to a specific value with the range of 3,000 to 4,000 Kelvin.

[0051] Accordingly, the controller **215** maps the four configurations of the two switches **210** to three states for configuring the two light emitting diodes **150**, **155** for permanent or long-term operation. Mapping two switch configurations to a single mode of long-term operation can simplify configuration instructions and reduce errors during field configuration. The resulting configurations support multiple color temperatures of illumination from a single luminaire **100**.

[0052] Some example embodiments support fewer or more than three states of illumination. For example, in one embodiment, the luminaire **100** comprises three strings of light emitting diodes **150** that have different color temperatures, such as 3,000 Kelvin, 2,700 Kelvin, and 4,000 Kelvin. In this example, in addition to the states illustrated in FIG. **3** and discussed above, the switching logic can support a fourth state in which only the 2,700 Kelvin string is on.

[0053] FIG. **4** illustrates a schematic of an example embodiment of the circuit **200**. The schematic of FIG. **4** provides one example implementation of the block diagram illustrated in FIG. **3**.

[0054] As illustrated in FIG. **4** in schematic form, the circuit **200** conforms to the foregoing discussion of the block diagram format of FIG. **3**. In FIG. **4**, the light emitting

diodes **150**, **155** of FIG. **3** are respectively represented with groups of light emitting diodes **150**, **155**. Additionally, the schematic details include a thermal protective switch **305** for guarding against overheating. FIG. **4** thus provides one example schematic for an embodiment of the electrical system of the luminaire **100** illustrated in FIG. **1** and discussed above.

[0055] Example embodiments can also be used to control one or more other characteristics of the output of a light fixture, in addition to or aside from CCT. For instance, example embodiments can be used to control lumen output of a light fixture. FIG. **5** shows a system diagram of such a light fixture **502** in accordance with certain example embodiments. Referring to FIGS. **1A-5**, the light fixture **502** of FIG. **5** includes a power supply **540**, an example control module **504**, and one or more light sources **542**. The power supply **540** and the light sources **542** of FIG. **5** are described in more detail below with respect to the power supply **740** and the light sources **742** of FIG. **7**A.

[0056] The example control module **504** can include one or more of a number of components. For example, as shown in FIG. **5**, the control module **504** can include a switch **570** and multiple resistors **575** coupled in series with the switch **570** and in parallel with each other. In this case, there are N resistors **575** (e.g., resistor **575-1**, resistor **575**-N). The switch **570** can be a single switch or multiple switches. The switch **570** and the resistors **575** of FIG. **5** are described in more detail below with respect to the switch **770** and the resistors **775** of FIG. **7**B. The communication links **505** between the power supply **540**, the switch **570**, the resistors **575**, and the light sources **542** are also described in more detail below with respect to the communication links **505** of FIG. **7**A.

[0057] FIG. **6** shows a portion of a circuit board assembly **690** of a light fixture with lumen control in accordance with certain example embodiments. Referring to FIGS. **1A-6**, the circuit board assembly **690** of FIG. **6** includes a circuit board **679** on which a number of discrete components are disposed. For example, in this case, the circuit board **679** has three resistors **675**, a switch **670**, a number of communication links **605** in the form of traces, and a number of light sources **642**. As discussed above with respect to FIG. **5**, the resistors **675**, the switch **670**, the communication links **605**, and the light sources **642** of FIG. **6** are described in more detail below with respect to their counterparts of FIGS. **7**A and **7**B.

[0058] FIGS. **7**A and **7**B show a lighting system **700** that includes a light fixture **702** having a control module **704** in accordance with certain example embodiments. The lighting system **700** can include a power source **795**, a user **750**, a network manager **780**, and the light fixture **702**. In addition to the control module **704** (also sometimes called a lumen control module **704**), the light fixture **702** can include a power supply **740**, a number of light sources **742**, and one or more optional sensors **760**. The lumen control module **704** controls the amount of power (e.g., current) that is delivered to the light sources **742**, thereby controlling the lumen output of the light sources **742**. This function performed by the control module **704** can sometimes be referred to as current steering or current routing.

[0059] As shown in FIG. **7**B, the control module **704** can include one or more of a number of components. Such components, can include, but are not limited to, a controller **706**, an isolated driver **707**, a communication module **708**, a timer **710**, an energy metering module **711**, a power module **712**, a storage repository **730**, a hardware processor **720**, a memory **722**, a transceiver **724**, an application interface **726**, one or more switches **770**, multiple resistors **775**, and, optionally, a security module **728**. The components shown in FIG. **7**B are not exhaustive, and in some embodiments, one or more of the components shown in FIG. **7**B may not be included in an example light fixture. Any component of the example light fixture **702** can be discrete or combined with one or more other components of the light fixture **702**.

[0060] Referring to FIGS. **1-7**B, a user **750** may be any person that interacts with light fixtures (e.g., light fixture **702**) and/or example control modules (e.g., control module **704**). Examples of a user **750** may include, but are not limited to, an engineer, an electrician, an instrumentation and controls technician, a mechanic, an operator, a property manager, a homeowner, a tenant, an employee, a consultant, a contractor, and a manufacturer's representative. The user **750** can use a user system (not shown), which may include a display (e.g., a GUI). The user **750** interacts with (e.g., sends data to, receives data from) the control module **704** of the light fixture **702** via the application interface **726** (described below). The user **750** can also interact with a network manager **780**, the power source **795**, and/or one or more of the sensors **760**. Interaction between the user **750**, the light fixture **702**, the network manager **780**, and the sensors **760** can be conducted using communication links **705**.

[0061] Each communication link **705** can include wired (e.g., Class 1 electrical cables, Class 2 electrical cables, Ethernet cables, electrical connectors, electrical conductors and/or wireless (e.g., Wi-Fi, visible light communication, cellular networking, Bluetooth, Bluetooth Low Energy (BLE), Zigbee, WirelessHART, ISA100, Power Line Carrier, RS485, DALI) technology. For example, a communication link **705** can be (or include) a wireless link between the control module **704** and the user **750**. The communication link **705** can transmit signals (e.g., power signals, communication signals, control signals, data) between the light fixture **702** and the user **750**, the power source **795**, the network manager **780**, and/or one or more of the sensors **760**.

[0062] The network manager **780** is a device or component that controls all or a portion (e.g., a communication network) of the system **700** that includes the control module **704** of the light fixture **702**, the power source **795**, the user **750**, and the sensors **760**. The network manager **780** can be substantially similar to the control module **704**, or portions thereof, as described below. For example, the network manager **780** can include a controller. Alternatively, the network manager **780** can include one or more of a number of features in addition to, or altered from, the features of the control module **704** described below. As described herein, communication with the network manager **780** can include communicating with one or more other components (e.g., another light fixture) of the system **700**. In such a case, the network manager **780** can facilitate such communication.

[0063] The power source **795** of the system **700** provides AC mains or some other form of power to the light fixture **702**, as well as to one or more other components (e.g., the network manager **780**) of the system **700**. The power source **795** can include one or more of a number of components. Examples of such components can include, but are not limited to, an electrical conductor, a coupling feature (e.g.,

an electrical connector), a transformer, an inductor, a resistor, a capacitor, a diode, a transistor, and a fuse. The power source **795** can be, or include, for example, a wall outlet, an energy storage device (e.g. a battery, a supercapacitor), a circuit breaker, and/or an independent source of generation (e.g., a photovoltaic solar generation system). The power source **795** can also include one or more components (e.g., a switch, a relay, a controller) that allow the power source **795** to communicate with and/or follow instructions from the user **750**, the control module **704**, and/or the network manager **780**.

[0064] The power source **795** can be coupled to the power supply **740** of the light fixture **702**. In this case, the power source **795** includes one or more communication links **705** (e.g., electrical conductors), at the distal end of which can be disposed a coupling feature (e.g., an electrical connector). The power supply **740** of the light fixture **702** can also include one or more communication links **705** (e.g., electrical conductors, electrical connectors) that complement and couple to the power source **795**. In this way, the AC mains provided by the power source **795** is delivered directly to the power supply **740** of the light fixture **702**.

[0065] The one or more optional sensors **760** can be any type of sensing device that measure one or more parameters. Examples of types of sensors **760** can include, but are not limited to, a passive infrared sensor, a photocell, a differential pressure sensor, a humidity sensor, a pressure sensor, an air flow monitor, a gas detector, and a resistance temperature detector. Parameters that can be measured by a sensor **760** can include, but are not limited to, movement, occupancy, ambient light, infrared light, temperature within the light fixture housing, and ambient temperature. The parameters measured by the sensors **760** can be used by the controller **706** of the control module **704** and/or by one or more other components (e.g., the power supply **740**) of the light fixture **702** to operate the light fixture **702**.

[0066] The controller **706** of the control module **704** can be configured to communicate with (and in some cases control) the sensor **760**. In some other cases, a sensor **760** can be part of the control module **704**, where the controller **706** of the control module **704** can be configured to communicate with (and in some cases control) the sensor **760**. As yet another alternative, a sensor **760** can be a new device that is added to the light fixture **702**, where the controller **706** of the control module **704** is configured to communicate with (and in some cases control) the sensor **760**. The controller **706** and a sensor **760** can be coupled to each other using communication links **705**. Each sensor **760** can use one or more of a number of communication protocols **732** that are known and used by the control module **704**.

[0067] The user **750**, the network manager **780**, the power source **795**, and/or the sensors **760** can interact with the control module **704** of the light fixture **702** using the application interface **726** in accordance with one or more example embodiments. Specifically, the application interface **726** of the control module **704** receives data (e.g., information, communications, instructions, updates to firmware) from and sends data (e.g., information, communications, instructions) to the user **750**, the network manager **780**, the power source **795**, and/or each sensor **760**. The user **750**, the network manager **780**, the power source **795**, and/or each sensor **760** can include an interface to receive data from and send data to the control module **704** in certain example embodiments. Examples of such an interface can include, but are not limited to, a graphical user interface, a touchscreen, an application programming interface, a keyboard, a monitor, a mouse, a web service, a data protocol adapter, some other hardware and/or software, or any suitable combination thereof.

[0068] The control module **704**, the user **750**, the network manager **780**, the power source **795**, and/or the sensors **760** can use their own system or share a system in certain example embodiments. Such a system can be, or contain a form of, an Internet-based or an intranet-based computer system that is capable of communicating with various software. A computer system includes any type of computing device and/or communication device, including but not limited to the control module **704**. Examples of such a system can include, but are not limited to, a desktop computer with a Local Area Network (LAN), a Wide Area Network (WAN), Internet or intranet access, a laptop computer with LAN, WAN, Internet or intranet access, a smart phone, a server, a server farm, an android device (or equivalent), a tablet, smartphones, and a personal digital assistant (PDA). Such a system can correspond to a computer system as described below with regard to FIG. **8**.

[0069] Further, as discussed above, such a system can have corresponding software (e.g., user software, sensor software, controller software, network manager software). The software can execute on the same or a separate device (e.g., a server, mainframe, desktop personal computer (PC), laptop, PDA, television, cable box, satellite box, kiosk, telephone, mobile phone, or other computing devices) and can be coupled by the communication network (e.g., Internet, Intranet, Extranet, LAN, WAN, or other network communication methods) and/or communication channels, with wire and/or wireless segments according to some example embodiments. The software of one system can be a part of, or operate separately but in conjunction with, the software of another system within the system **700**.

[0070] The light fixture **702** can include a light fixture housing. The light fixture housing can include at least one wall that forms a light fixture cavity. In some cases, the light fixture housing can be designed to comply with any applicable standards so that the light fixture **702** can be located in a particular environment. The light fixture housing can form any type of light fixture **702**, including but not limited to a troffer light fixture, a down can light fixture, a recessed light fixture, and a pendant light fixture. The light fixture housing can also be used to combine the light fixture **702** with some other device, including but not limited to a ceiling fan, a smoke detector, a broken glass detector, a garage door opener, and a wall clock.

[0071] The light fixture housing of the light fixture **702** can be used to house or be located proximate to one or more components of the light fixture **702**, including the control module **704** and one or more sensors **760**. For example, the control module **704** (which in this case includes the controller **706**, the isolated driver **707**, the communication module **708**, the timer **710**, the energy metering module **711**, the power module **712**, the storage repository **730**, the hardware processor **720**, the memory **722**, the transceiver **724**, the application interface **726**, the switches **770**, and the optional security module **728**) can be disposed within the cavity formed by the housing of the light fixture **702**. In alternative embodiments, any one or more of these or other

components (e.g., a sensor **760**) of the light fixture **702** can be disposed on or remotely from the housing of the light fixture **702**.

[0072] The control module **704** can include a housing (not shown in FIGS. 7A and 7B). Such a housing can include at least one wall that forms a cavity. One or more of the various components (e.g., controller **706**, hardware processor **720**) of the control module **704** can be disposed within the cavity formed by such a housing. Alternatively, a component of the control module **704** can be disposed on such a housing or can be located remotely from, but in communication with, such a housing. As yet another alternative, the control module **704** can be a number of discrete components that are disposed on a circuit board.

[0073] The storage repository **730** can be a persistent storage device (or set of devices) that stores software and data used to assist the control module **704** in communicating with the user **750**, the network manager **780**, the power source **795**, and one or more sensors **760** within the system **700**. In one or more example embodiments, the storage repository **730** stores one or more communication protocols **732**, operational protocols **733**, and sensor data **734**. The communication protocols **732** can be any of a number of protocols that are used to send and/or receive data between the control module **704** and the user **750**, the network manager **780**, the power source **795**, and one or more sensors **760**. One or more of the communication protocols **732** can be a time-synchronized protocol. Examples of such time-synchronized protocols can include, but are not limited to, a highway addressable remote transducer (HART) protocol, a wirelessHART protocol, and an International Society of Automation (ISA) 100 protocol. In this way, one or more of the communication protocols **732** can provide a layer of security to the data transferred within the system **700**.

[0074] The operational protocols **733** can be any algorithms, formulas, logic steps, and/or other similar operational procedures that the controller **706** of the control module **704** follows based on certain conditions at a point in time. An example of an operational protocol **733** is directing the controller **706** to provide power and to cease providing power to the power supply **740** at pre-set points of time. Another example of an operational protocol **733** is directing the controller **706** to adjust the amount of power delivered to the power supply **740**, thereby acting as a dimmer. Yet another example of an operational protocol **733** is to instruct the controller **706** how and when to tune the color output by one or more of the light sources **742** of the light fixture **702**. Still another example of an operational protocol **733** is to check one or more communication links **705** with the network manager **780** and, if a communication link **705** is not functioning properly, allow the control module **704** to operate autonomously from the rest of the system **700**.

[0075] As another example of an operational protocol **733**, configurations of the control module **704** can be stored in memory **722** (e.g., non-volatile memory) so that the control module **704** (or portions thereof) can operate regardless of whether the control module **704** is communicating with the network manager **780** and/or other components in the system **700**. Still another example of an operational protocol **733** is identifying an adverse condition or event (e.g., excessive humidity, no pressure differential, extreme pressure differential, high temperature) based on measurements taken by a sensor **760**. In such a case, the controller **706** can notify the network manager **780** and/or the user **750** as to the adverse condition or event identified. Yet another example of an operational protocol **733** is to have the control module **704** operate in an autonomous control mode if one or more components (e.g., the communication module **708**, the transceiver **724**) of the control module **704** that allows the control module **704** to communicate with another component of the system **700** fails.

[0076] Sensor data **734** can be any data associated with (e.g., collected by) each sensor **760** that is communicably coupled to the control module **704**. A sensor **760** can be newly added or pre-existing as part of the light fixture **702**. Such data can include, but is not limited to, a manufacturer of the sensor **760**, a model number of the sensor **760**, communication capability of a sensor **760**, power requirements of a sensor **760**, and measurements taken by the sensor **760**. Examples of a storage repository **730** can include, but are not limited to, a database (or a number of databases), a file system, a hard drive, flash memory, some other form of solid state data storage, or any suitable combination thereof. The storage repository **730** can be located on multiple physical machines, each storing all or a portion of the communication protocols **732**, the operational protocols **733**, and/or the sensor data **734** according to some example embodiments. Each storage unit or device can be physically located in the same or in a different geographic location.

[0077] The storage repository **730** can be operatively connected to the controller **706**. In one or more example embodiments, the controller **706** includes functionality to communicate with the user **750**, the network manager **780**, the power source **795**, and the sensors **760** in the system **700**. More specifically, the controller **706** sends information to and/or receives information from the storage repository **730** in order to communicate with the user **750**, the network manager **780**, the power source **795**, and the sensors **760**. As discussed below, the storage repository **730** can also be operatively connected to the communication module **708** in certain example embodiments.

[0078] In certain example embodiments, the controller **706** of the control module **704** controls the operation of one or more components (e.g., the communication module **708**, the timer **710**, the transceiver **724**) of the control module **704**. For example, the controller **706** can activate the communication module **708** when the communication module **708** is in "sleep" mode and when the communication module **708** is needed to send data received from another component (e.g., a sensor **760**, the user **750**) in the system **700**. As another example, the controller **706** can operate one or more sensors **760** to dictate when measurements are taken by the sensors **760** and when those measurements are communicated by the sensors **760** to the controller **706**. As another example, the controller **706** can acquire the current time using the timer **710**. The timer **710** can enable the control module **704** to control the light fixture **702** even when the control module **704** has no communication with the network manager **780**.

[0079] As another example, the controller **706** can check one or more communication links **705** between the control module **704** and the network manager **780** and, if a communication link **705** is not functioning properly, allow the control module **704** to operate autonomously from the rest of the system **700**. As yet another example, the controller **706** can store configurations of the control module **704** (or portions thereof) in memory **722** (e.g., non-volatile memory)

so that the control module **704** (or portions thereof) can operate regardless of whether the control module **704** is communicating with the network controller **780** and/or other components in the system **700**.

[0080] As still another example, the controller **706** can obtain readings from an adjacent sensor if the sensor **760** associated with the light fixture **702** malfunctions, if the communication link **705** (which can include electrical conductor **439** and/or coupling feature **459**) between the sensor **760** and the control module **704** fails, and/or for any other reason that the readings of the sensor **760** associated with the light fixture **702** fails to reach the control module **704**. To accomplish this, for example, the network manager **780** can instruct, upon a request from the controller **706**, the adjacent sensor **760** to communicate its readings to the controller **706** of the control module **704** using communication links **705**.

[0081] As still another example, the controller **706** can cause the control module **704** to operate in an autonomous control mode if one or more components (e.g., the communication module **708**, the transceiver **724**) of the control module **704** that allows the control module **704** to communicate with another component of the system **700** fails. Similarly, the controller **706** of the control module **704** can control at least some of the operation of one or more adjacent light fixtures in the system **700**. As yet another example, the controller **706** can provide power and/or control (e.g., 0V-10V), by operating the switches **770** to correspond to a particular resistance of the resistors **775**, to the light sources **742** based on instructions received from a user **750** or a network manager **780**, and/or based on instructions stored in the storage repository **730**.

[0082] In some cases, the instructions received by the controller **706** can be within a range of voltage (e.g., 0V-10V), where signals within a subrange (e.g., 2V-3V) corresponds to a specific instruction (e.g., open switches **3** and **4**, and close switches **1** and **2**). While some examples provided herein are in terms of volts, such as the examples above, those of ordinary skill in the art will appreciate that a range of currents can be provided to the light sources **742** by manipulating the switches **770** to correspond to a particular resistance of the resistors **775**.

[0083] As still another example, the controller **706** can determine, using the energy metering module **711**, when power is received from the power supply **740**. The controller **706** can also determine, using the energy metering module **711**, the quality of the power received from the power supply **740**. The controller **706** can further determine whether the power source **795**, through the power supply **740**, is providing any instructions for operating the light fixture **702**.

[0084] The controller **706** can provide control, communication, and/or other similar signals to the user **750**, the network manager **780**, the power source **795**, the power supply **740**, and one or more of the sensors **760**. Similarly, the controller **706** can receive control, communication, and/or other similar signals from the user **750**, the network manager **780**, the power source **795**, the power supply **740**, and one or more of the sensors **760**. The controller **706** can control each sensor **760** automatically (for example, based on one or more algorithms stored in the storage repository **730**) and/or based on control, communication, and/or other similar signals received from another device through a communication link **705**. The controller **706** may include a printed circuit board, upon which the hardware processor **720** and/or one or more discrete components of the control module **704** are positioned.

[0085] In certain example embodiments, the controller **706** can include an interface that enables the controller **706** to communicate with one or more components (e.g., power supply **740**) of the light fixture **702**. For example, if the power supply **740** of the light fixture **702** operates under IEC Standard 62386, then the power supply **740** can include a digital addressable lighting interface (DALI). In such a case, the controller **706** can also include a DALI to enable communication with the power supply **740** within the light fixture **702**. Such an interface can operate in conjunction with, or independently of, the communication protocols **732** used to communicate between the control module **704** and the user **750**, the network manager **780**, the power source **795**, and the sensors **760**.

[0086] The controller **706** (or other components of the control module **704**) can also include one or more hardware components and/or software elements to perform its functions. Such components can include, but are not limited to, a universal asynchronous receiver/transmitter (UART), a serial peripheral interface (SPI), a direct-attached capacity (DAC) storage device, an analog-to-digital converter, an inter-integrated circuit (I^2C), and a pulse width modulator (PWM).

[0087] The isolated driver **707** of the control module **704** can be configured to isolate an electrical ground associated with the instructions received by the control module **704** from a user **750** and/or the network manager **780**. In other words, the isolated driver **707** can be used to help prevent faults, surges, false signals, and other adverse conditions that can alter the instructions and/or prevent the control module **704** from operating properly.

[0088] The isolated driver **707** can include one or more of a number of components. Such components can include, but are not limited to, a capacitor, a resistor, a transformer, a Zener diode, and a transistor. In certain example embodiments, the isolated driver **707** can be part of an isolation zone **795** that electrically isolates the switches **770** of the control module **704** from transient signals that could alter the instructions, thereby causing the one or more of the switches **770** to operate incorrectly or inconsistently with the instructions provided by a user **750** and/or the network manager **780**.

[0089] In certain example embodiments, the one or more switches **770** of the control module **704** is used to select one of a number of lumens or other output characteristics (e.g., CCT) of the light fixture **702**. The switches **770** can be any of a number of types of switches, including but not limited to one or more DIP switches, one or more SIPP switches, one or more rocker switches, one or more reed switches, one or more magnetic switches, one or more rotary switches, one or more rotary dials, one or more selectors or selector switches, one or more slide switches, one or more snap switches, one or more thumbwheels, one or more toggles or toggle switches, one or more keys or keypads, one or more buttons or pushbuttons, part of an integrated circuit, logic implemented in software, one or more transistors (e.g., MOSFETs), and one or more of a number of discrete components that are coupled to each other. In other words, a switch **770** can be tangible or virtual, and can be a single discrete component or a number of components coupled to each other.

[0090] As discussed above, the control module **704** can include multiple switches **770**. A switch can be manually controlled by a user **750**. When the position of a switch **770** is manually controlled, the housing of the light fixture **702** can have an access panel (e.g., access aperture **129** described above) or other similar configuration to allow access by a user **750** to change the position of one or more switches **770**. In addition, or in the alternative, a switch **770** can be controlled by the controller **706** of the control module **704**.

[0091] When there are multiple switches **770**, each switch **770** can be used to control, using the resistors **775**, one or more light sources **742** (also called an array of light sources **742**) of the light fixture **702**. The controller **706** can be coupled to each of the switches **770** using communication links **705** (e.g., electrical conductors, wire traces). Each switch **770** has an open position and a closed position. When there are multiple switches **770**, different combinations of positions of the various switches **770**, which correspond to different resistances of the resistors **775**, can alter the lumen output of the light fixture **702**.

[0092] As shown above with respect to FIG. **5**, each switch **770** is coupled to multiple resistors **775**. Each resistor **775** can be a discrete component with a known resistance (e.g., 1 kΩ, 5 MΩ). In some cases, a resistor **775** can have a variable resistance (e.g., a potentiometer, a variable resistor) that has a user-selectable resistance within a range of resistances. A resistor **775** that corresponds to a particular combination of positions of the various switches **770** can be a single resistive component or multiple resistive components that are connected in series and/or in parallel with each other. Each selection of a switch **770** corresponds to a particular resistance of a downstream resistor **775**, which in turn determines the amount of current that flows from the power supply **740**, through the switch **770** and the corresponding resistor **775** (based on the configuration of the switch **770**), and on to the light sources **742**.

[0093] The communication module **708** of the control module **704** determines and implements the communication protocol (e.g., from the communication protocols **732** of the storage repository **730**) that is used when the controller **706** communicates with (e.g., sends signals to, receives signals from) the user **750**, the network manager **780**, the power source **795**, and/or one or more of the sensors **760**. In some cases, the communication module **708** accesses the sensor data **734** to determine which communication protocol is used to communicate with the sensor **760** associated with the sensor data **734**. In addition, the communication module **708** can interpret the communication protocol of a communication received by the control module **704** so that the controller **706** can interpret the communication.

[0094] The communication module **708** can send and receive data between the network manager **780**, the power source **795**, and/or the users **750** and the control module **704**. The communication module **708** can send and/or receive data in a given format that follows a particular communication protocol **732**. The controller **706** can interpret the data packet received from the communication module **708** using the communication protocol **732** information stored in the storage repository **730**. The controller **706** can also facilitate the data transfer between one or more sensors **760** and the network manager **780**, the power source **795**, and/or a user **750** by converting the data into a format understood by the communication module **708**.

[0095] The communication module **708** can send data (e.g., communication protocols **732**, operational protocols **733**, sensor data **734**, operational information, error codes, threshold values, algorithms) directly to and/or retrieve data directly from the storage repository **730**. Alternatively, the controller **706** can facilitate the transfer of data between the communication module **708** and the storage repository **730**. The communication module **708** can also provide encryption to data that is sent by the control module **704** and decryption to data that is received by the control module **704**. The communication module **708** can also provide one or more of a number of other services with respect to data sent from and received by the control module **704**. Such services can include, but are not limited to, data packet routing information and procedures to follow in the event of data interruption.

[0096] The timer **710** of the control module **704** can track clock time, intervals of time, an amount of time, and/or any other measure of time. The timer **710** can also count the number of occurrences of an event, whether with or without respect to time. Alternatively, the controller **706** can perform the counting function. The timer **710** is able to track multiple time measurements concurrently. The timer **710** can track time periods based on an instruction received from the controller **706**, based on an instruction received from the user **750**, based on an instruction programmed in the software for the control module **704**, based on some other condition or from some other component, or from any combination thereof.

[0097] The timer **710** can be configured to track time when there is no power delivered to the control module **704** (e.g., the power module **712** malfunctions) using, for example, a super capacitor or a battery backup. In such a case, when there is a resumption of power delivery to the control module **704**, the timer **710** can communicate any aspect of time to the control module **704**. In such a case, the timer **710** can include one or more of a number of components (e.g., a super capacitor, an integrated circuit) to perform these functions.

[0098] The energy metering module **711** of the control module **704** measures one or more components of power (e.g., current, voltage, resistance, VARs, watts) at one or more points (e.g., output of the power supply **740**) associated with the light fixture **702**. The energy metering module **711** can include any of a number of measuring devices and related devices, including but not limited to a voltmeter, an ammeter, a power meter, an ohmmeter, a current transformer, a potential transformer, and electrical wiring. The energy metering module **711** can measure a component of power continuously, periodically, based on the occurrence of an event, based on a command received from the controller **706**, and/or based on some other factor.

[0099] The power module **712** of the control module **704** provides power to one or more other components (e.g., timer **710**, controller **706**) of the control module **704**. In addition, in certain example embodiments, the power module **712** can provide power to the light sources **742** of the light fixture **702**. The power module **712** can include one or more of a number of single or multiple discrete components (e.g., transistor, diode, resistor), and/or a microprocessor. The power module **712** may include a printed circuit board, upon which the microprocessor and/or one or more discrete components are positioned. In some cases, the power module **712** can include one or more components that allow the

power module **712** to measure one or more elements of power (e.g., voltage, current) that is delivered to and/or sent from the power module **712**.

[0100] The power module **712** can include one or more components (e.g., a transformer, a diode bridge, an inverter, a converter) that receives power (e.g., AC mains) from the power supply **740** and/or some other source of power (e.g., a battery, a source external to the light fixture **702**). The power module **712** can use this power to generate power of a type (e.g., alternating current, direct current) and level (e.g., 12V, 24V, 120V) that can be used by the other components of the control module **704** and the light sources **742**. In addition, or in the alternative, the power module **712** can be a source of power in itself to provide signals to the other components of the control module **704** and/or the light sources **742**. For example, the power module **712** can be a battery or other form of energy storage device. As another example, the power module **712** can be a localized photovoltaic solar power system.

[0101] In certain example embodiments, the power module **712** of the control module **704** can also provide power and/or control signals, directly or indirectly, to one or more of the sensors **760**. In such a case, the controller **706** can direct the power generated by the power module **712** to the sensors **760** and/or the light sources **742** of the light fixture **702**. In this way, power can be conserved by sending power to the sensors **760** and/or the light sources **742** of the light fixture **702** when those devices need power, as determined by the controller **706**.

[0102] The hardware processor **720** of the control module **704** executes software, algorithms, and firmware in accordance with one or more example embodiments. Specifically, the hardware processor **720** can execute software on the controller **706** or any other portion of the control module **704**, as well as software used by the user **750**, the network manager **780**, the power source **795**, the power supply **740**, and/or one or more of the sensors **760**. The hardware processor **720** can be an integrated circuit, a central processing unit, a multi-core processing chip, SoC, a multi-chip module including multiple multi-core processing chips, or other hardware processor in one or more example embodiments. The hardware processor **720** is known by other names, including but not limited to a computer processor, a microprocessor, and a multi-core processor.

[0103] In one or more example embodiments, the hardware processor **720** executes software instructions stored in memory **722**. The memory **722** includes one or more cache memories, main memory, and/or any other suitable type of memory. The memory **722** can include volatile and/or non-volatile memory. The memory **722** is discretely located within the control module **704** relative to the hardware processor **720** according to some example embodiments. In certain configurations, the memory **722** can be integrated with the hardware processor **720**.

[0104] In certain example embodiments, the control module **704** does not include a hardware processor **720**. In such a case, the control module **704** can include, as an example, one or more field programmable gate arrays (FPGA), one or more insulated-gate bipolar transistors (IGBTs), and/or one or more integrated circuits (ICs). Using FPGAs, IGBTs, ICs, and/or other similar devices known in the art allows the control module **704** (or portions thereof) to be programmable and function according to certain logic rules and thresholds without the use of a hardware processor. Alternatively, FPGAs, IGBTs, ICs, and/or similar devices can be used in conjunction with one or more hardware processors **720**.

[0105] The transceiver **724** of the control module **704** can send and/or receive control and/or communication signals. Specifically, the transceiver **724** can be used to transfer data between the control module **704** and the user **750**, the network manager **780**, the power source **795**, the power supply **740**, and/or the sensors **760**. The transceiver **724** can use wired and/or wireless technology. The transceiver **724** can be configured in such a way that the control and/or communication signals sent and/or received by the transceiver **724** can be received and/or sent by another transceiver that is part of the user **750**, the network manager **780**, the power source **795**, the power supply **740**, and/or the sensors **760**. The transceiver **724** can use any of a number of signal types, including but not limited to radio frequency signals and visible light signals.

[0106] When the transceiver **724** uses wireless technology, any type of wireless technology can be used by the transceiver **724** in sending and receiving signals. Such wireless technology can include, but is not limited to, Wi-Fi, visible light communication, cellular networking, BLE, Zigbee, and Bluetooth. The transceiver **724** can use one or more of any number of suitable communication protocols (e.g., ISA100, HART) when sending and/or receiving signals. Such communication protocols can be stored in the communication protocols **732** of the storage repository **730**. Further, any transceiver information for the user **750**, the network manager **780**, the power source **795**, the power supply **740**, and/or the sensors **760** can be part of the communication protocols **732** (or other areas) of the storage repository **730**.

[0107] Optionally, in one or more example embodiments, the security module **728** secures interactions between the control module **704**, the user **750**, the network manager **780**, the power source **795**, the power supply **740**, and/or the sensors **760**. More specifically, the security module **728** authenticates communication from software based on security keys verifying the identity of the source of the communication. For example, user software may be associated with a security key enabling the software of the user **750** to interact with the control module **704**. Further, the security module **728** can restrict receipt of information, requests for information, and/or access to information in some example embodiments.

[0108] As mentioned above, aside from the control module **704** and its components, the light fixture **702** can include one or more sensors **760**, a power supply **740**, and one or more light sources **742**. The sensors **760** are described above. The light sources **742** of the light fixture **702** are devices and/or components typically found in a light fixture to allow the light fixture **702** to operate. The light sources **742** emit light using power provided by the power supply **740**. The light fixture **702** can have one or more of any number and/or type (e.g., light-emitting diode, incandescent, fluorescent, halogen) of light sources **742**. A light source **742** can vary in the amount and/or color of light that it emits.

[0109] The power supply **740** of the light fixture **702** receives power (also called primary power or AC mains power) from the power source **795**. The power supply **740** uses the power it receives to generate and provide power (also called final power herein) to the control module **704**. The power supply **740** can be called by any of a number of other names, including but not limited to a driver, a LED

driver, and a ballast. The power supply **740** can include one or more of a number of single or multiple discrete components (e.g., transistor, diode, resistor), and/or a microprocessor. The power supply **740** may include a printed circuit board, upon which the microprocessor and/or one or more discrete components are positioned.

[0110] In some cases, the power supply **740** can include one or more components (e.g., a transformer, a diode bridge, an inverter, a converter) that receives power from the power source **795** and generates power of a type (e.g., alternating current, direct current) and level (e.g., 12V, 24V, 120V) that can be used by the control module **704**. In addition, or in the alternative, the power supply **740** can be a source of power in itself. For example, the power supply **740** can or include be a battery, a localized photovoltaic solar power system, or some other source of independent power.

[0111] While not expressly shown or described herein, the light fixture **702** with an example control module **704** can also include one or more of a number of other components that are not critical to the use of example embodiments. Examples of such other components can include, but are not limited to, a heat sink, an electrical conductor or electrical cable, a terminal block, a lens, a diffuser, a reflector, an air moving device, a baffle, a potting compound, and a circuit board.

[0112] As stated above, the light fixture **702** can be placed in any of a number of environments. In such a case, the housing of the light fixture **702**, which includes the example control module **704**, can be configured to comply with applicable standards for any of a number of environments. For example, the light fixture **702** can be rated as a Division **1** or a Division **2** enclosure under NEC standards. Similarly, the control module **704**, any of the sensors **760**, or other devices communicably coupled to the light fixture **702** can be configured to comply with applicable standards for any of a number of environments.

[0113] FIG. **8** illustrates one embodiment of a computing device **818** that implements one or more of the various techniques described herein, and which is representative, in whole or in part, of the elements described herein pursuant to certain example embodiments. Computing device **818** is one example of a computing device and is not intended to suggest any limitation as to scope of use or functionality of the computing device and/or its possible architectures. Neither should computing device **818** be interpreted as having any dependency or requirement relating to any one or combination of components illustrated in the example computing device **818**.

[0114] Computing device **818** includes one or more processors or processing units **814**, one or more memory/storage components **815**, one or more input/output (I/O) devices **816**, and a bus **817** that allows the various components and devices to communicate with one another. Bus **817** represents one or more of any of several types of bus structures, including a memory bus or memory controller, a peripheral bus, an accelerated graphics port, and a processor or local bus using any of a variety of bus architectures. Bus **817** includes wired and/or wireless buses.

[0115] Memory/storage component **815** represents one or more computer storage media. Memory/storage component **815** includes volatile media (such as random access memory (RAM)) and/or nonvolatile media (such as read only memory (ROM), flash memory, optical disks, magnetic disks, and so forth). Memory/storage component **815** includes fixed media (e.g., RAM, ROM, a fixed hard drive, etc.) as well as removable media (e.g., a Flash memory drive, a removable hard drive, an optical disk, and so forth).

[0116] One or more I/O devices **816** allow a customer, utility, or other user to enter commands and information to computing device **818**, and also allow information to be presented to the customer, utility, or other user and/or other components or devices. Examples of input devices include, but are not limited to, a keyboard, a cursor control device (e.g., a mouse), a microphone, a touchscreen, and a scanner. Examples of output devices include, but are not limited to, a display device (e.g., a monitor or projector), speakers, outputs to a lighting network (e.g., DMX card), a printer, and a network card.

[0117] Various techniques are described herein in the general context of software or program modules. Generally, software includes routines, programs, objects, components, data structures, and so forth that perform particular tasks or implement particular abstract data types. An implementation of these modules and techniques are stored on or transmitted across some form of computer readable media. Computer readable media is any available non-transitory medium or non-transitory media that is accessible by a computing device. By way of example, and not limitation, computer readable media includes "computer storage media".

[0118] "Computer storage media" and "computer readable medium" include volatile and non-volatile, removable and non-removable media implemented in any method or technology for storage of information such as computer readable instructions, data structures, program modules, or other data. Computer storage media include, but are not limited to, computer recordable media such as RAM, ROM, EEPROM, flash memory or other memory technology, CD-ROM, digital versatile disks (DVD) or other optical storage, magnetic cassettes, magnetic tape, magnetic disk storage or other magnetic storage devices, or any other medium which is used to store the desired information and which is accessible by a computer.

[0119] The computer device **818** is connected to a network (not shown) (e.g., a LAN, a WAN such as the Internet, the cloud, or any other similar type of network) via a network interface connection (not shown) according to some example embodiments. Those skilled in the art will appreciate that many different types of computer systems exist (e.g., desktop computer, a laptop computer, a personal media device, a mobile device, such as a cell phone or personal digital assistant, or any other computing system capable of executing computer readable instructions), and the aforementioned input and output means take other forms, now known or later developed, in other example embodiments. Generally speaking, the computer system **818** includes at least the minimal processing, input, and/or output means necessary to practice one or more embodiments.

[0120] Further, those skilled in the art will appreciate that one or more elements of the aforementioned computer device **818** is located at a remote location and connected to the other elements over a network in certain example embodiments. Further, one or more embodiments is implemented on a distributed system having one or more nodes, where each portion of the implementation (e.g., controller **706**) is located on a different node within the distributed system. In one or more embodiments, the node corresponds to a computer system. Alternatively, the node corresponds to a processor with associated physical memory in some

example embodiments. The node alternatively corresponds to a processor with shared memory and/or resources in some example embodiments.

[0121] As will be appreciated by those of ordinary skill, the textual and illustrated disclosure provided herein supports a wide range of embodiments and implementations. In some non-limiting example embodiments of the disclosure, a luminaire can comprise: a housing; a substrate disposed in the housing; a first plurality of light emitting diodes that are mounted to the substrate and that have a first color temperature; a second plurality of light emitting diodes that are mounted to the substrate and that have a second color temperature; and a plurality of manual switches that are disposed at the housing for permanently configuring the luminaire to: provide illumination of the first color temperature by enabling the first plurality of light emitting diodes; provide illumination of the second color temperature by enabling the second plurality of light emitting diodes; and provide illumination of a third color temperature that is between the first color temperature and the second color temperature by enabling the first plurality of light emitting diodes and the second plurality of light emitting diodes.

[0122] In some example embodiments of the luminaire, the housing can comprise an aperture that is configured for emitting area illumination, and the substrate is oriented to emit light through the aperture. In some example embodiments of the luminaire, the plurality of manual switches are mounted to the substrate. In some example embodiments of the luminaire, the plurality of manual switches are mounted in the housing. In some example embodiments of the luminaire, the plurality of manual switches are mounted to the housing. In some example embodiments of the luminaire, the plurality of manual switches comprise a dual inline pin (DIP) switch.

[0123] In some example embodiments of the luminaire, the plurality of manual switches provide two switch states, and each of the two switch states provides illumination of the third color temperature by enabling the first plurality of light emitting diodes and the second plurality of light emitting diodes. In some example embodiments of the luminaire, the housing is circular and comprises a lip configured for extending around an aperture in a ceiling. In some example embodiments of the luminaire, the housing comprises a wiring port disposed on a side of the housing. In some example embodiments of the luminaire, the housing comprises a light-emitting aperture in which the substrate is disposed.

[0124] In some example embodiments, the luminaire further comprises: an aperture disposed at a lower side of the housing; a lens disposed at the aperture for refracting light emitted by the first and second light emitting diodes; and a reflector that is disposed between the lens and the light emitting diodes and that is operative to reflect light between the first and second light emitting diodes and the lens. In some example embodiments of the luminaire, the housing is circular and comprises a lip configured for extending around an aperture in a ceiling. In some example embodiments of the luminaire, the housing comprises a wiring port disposed on a side of the housing. In some example embodiments of the luminaire, the housing forms a cavity associated with the aperture. In some example embodiments of the luminaire, the first and second light source are mounted to a substrate that is disposed at an end of the cavity. In some example embodiments, the luminaire further comprises a reflector that is disposed in the cavity between the lens and the first and second light sources, the reflector operative to reflect light between the first and second light sources and the lens.

[0125] Technology for providing a configurable a luminaire has been described. Many modifications and other embodiments of the disclosures set forth herein will come to mind to one skilled in the art to which these disclosures pertain having the benefit of the teachings presented in the foregoing descriptions and the associated drawings. Therefore, it is to be understood that the disclosures are not to be limited to the specific embodiments disclosed and that modifications and other embodiments are intended to be included within the scope of this application. Although specific terms are employed herein, they are used in a generic and descriptive sense only and not for purposes of limitation.

What is claimed is:

1. A luminaire comprising:

a power supply that receives AC mains power from a power source and delivers intermediate power; and

a lumen control module coupled to the power supply, wherein the lumen control module receives the intermediate power from the power source, wherein the lumen control module comprises:

at least one first switch that has multiple positions; and

a plurality of resistors coupled to the at least one first switch, wherein each position of the at least one first switch corresponds to a resistance of the plurality of resistors, wherein the intermediate power received by the plurality of resistors is translated to a current level of a plurality of current levels based on the resistance; and

at least one light source coupled to the lumen control module, wherein the at least one light source emits a lumen output based on the current level received from the lumen control module.

2. The luminaire of claim **1**, wherein the lumen control module further comprises a controller.

3. The luminaire of claim **2**, wherein the controller of the lumen control module selects a position of the multiple positions of the at least one first switch.

4. The luminaire of claim **3**, wherein the controller comprises a transceiver, wherein the transceiver receives instructions from a user, wherein the instructions determine the position of the at least one first switch.

5. The luminaire of claim **4**, wherein the instructions are received from a remote control.

6. The luminaire of claim **1**, further comprising:

a second switch disposed in parallel with the at least one first switch between the power supply and the plurality of resistors.

7. The luminaire of claim **1**, wherein the at least one first switch is a physical switch that is manipulated by a user to select the position of the at least one switch.

8. The luminaire of claim **7**, wherein the at least one first switch is disposed within a housing of the luminaire.

9. The luminaire of claim **8**, wherein the housing has an access mechanism that allows the user to access the at least one first switch without disassembling the luminaire.

10. The luminaire of claim **7**, wherein the at least one first switch is disposed on a housing of the luminaire.

11. The luminaire of claim **10**, wherein the at least one first switch is removably coupled to the housing.

12. The luminaire of claim **7**, wherein the at least one first switch is inaccessible when the luminaire is installed.

13. A lumen control module for controlling lumens output by light sources of a luminaire, the lumen control module comprising:

at least one switch having a plurality of positions, and

a plurality of resistors coupled to the at least one switch and having a plurality of resistances, wherein each position of the at least one switch corresponds to a resistance of the plurality of resistors,

wherein the at least one switch is configured to receive power from a power supply of the luminaire,

wherein the plurality of resistors are configured to deliver, using the power received by the at least one switch, a current level of a plurality of current levels to the light sources of the luminaire,

wherein the current level is based on the resistance of the plurality of resistors.

14. The lumen control module of claim **13**, further comprising:

a controller coupled to the at least one switch, wherein the controller controls the plurality of positions of the at least one switch.

15. The lumen control module of claim **14**, further comprising:

a transceiver coupled to the controller, wherein the transceiver is configured to receive instructions for selecting the lumens output by the light sources of the luminaire.

16. The lumen control module of claim **15**, wherein the transceiver communicates using wireless technology.

17. The lumen control module of claim **14**, further comprising:

a memory storing a plurality of instructions; and

a hardware processor coupled to the memory, wherein the hardware processor executes the plurality of instructions for the controller.

18. The lumen control module of claim **13**, wherein the plurality of resistors comprises a plurality of discrete resistors coupled in parallel to each other and in series with the at least one switch.

19. The lumen control module of claim **13**, wherein a first resistor and a second resistor of the plurality of resistors are connected in series with each other, wherein a third resistor of the plurality of resistors is connected in parallel with the first resistor.

20. The lumen control module of claim **13**, wherein at least one resistor of the plurality of resistors is a variable resistor.

* * * * *