IN THE UNITED STATES PATENT AND TRADEMARK OFFICE

In re Patent of:	Stephen Barbour	
U.S. Patent No.:	11,574,372	Attorney Docket No.: 54598-0001PS1
Issue Date:	February 7, 2023	
Appl. Serial No.:	16/484,728	
Filing Date:	January 6, 2020	
Title:	BLOCKCHAIN MINE AT OIL OR GAS FACILITY	

Mail Stop Patent Board
Patent Trial and Appeal Board
U.S. Patent and Trademark Office
P.O. Box 1450
Alexandria, VA 22313-1450

PETITION FOR POST-GRANT REVIEW OF UNITED STATES PATENT NO. 11,574,372 PURSUANT TO 37 C.F.R. §42.200 *et seq.*

TABLE OF CONTENTS

I. INTRODUCTION 1

II. REQUIREMENTS FOR PGR 2
- **A.** Grounds for Standing and PGR Eligibility 2
- **B.** Challenge and Relief Requested 2
- **C.** CLAIM CONSTRUCTION 4
  1. "blockchain mining device" 4
  2. "mining processor" 6
  3. "a continuous flow of combustible gas" 6
  4. "sales gas line" 7
- **D.** Level of Ordinary Skill in the Art 7

III. THE '372 PATENT 8
- **A.** Brief Description of the '372 Patent Specification 8
- **B.** Prosecution History of the '372 Patent 10

IV. THE CHALLENGED CLAIMS ARE UNPATENTABLE UNDER 35 U.S.C § 103 12
- **A.** GROUND 1 (Dickerson and CryptoKube, in view of Szmigielski and Kheterpal) 12
  1. Overview of Dickerson 12
  2. Overview of the CryptoKube system 15
  3. Overview of Szmigielski 16
  4. Overview of Kheterpal 17
  5. The combination of Dickerson and CryptoKube 19
  6. Analysis 21
- **B.** GROUND 2 (Dickerson, CryptoKube, and Belady-989 in view of Szmigielski and Kheterpal) 48
  1. Overview of Belady-989 48
  2. The combination of Dickerson, CryptoKube, and Belady-989 50
  3. Analysis 52
- **C.** GROUND 3 (Dickerson, CryptoKube, Belady-989, and Boot in view of Szmigielski and Kheterpal) 64
  1. Overview of Boot 64
  2. The combination of Dickerson, CryptoKube, Belady-989, and Boot 67
  3. Analysis 68
- **D.** GROUND 4 (MAGS + Polivka miner) 77

1. Overview of Pioneer Energy's MAGS system 77
2. Overview of the Polivka miner 79
3. The combination of MAGS and Polivka.....81
4. Analysis 83
E. GROUND 5 99
1. The combination of MAGS, Polivka, and Belady-989 99
2. Analysis 100

V. THE CHALLENGED CLAIMS ARE UNPATENTABLE UNDER 35 U.S.C § 101.....112
A. The '372 Patent Is Ineligibly Abstract.....114
B. The '372 Patent Contains No "Inventive Concept" to Transform the Abstract Idea into a Patent-Eligible Application. 116
C. Claim 1 Is Representative of the Entire '372 Patent. 118

VI. PTAB DISCRETION SHOULD NOT PRECLUDE INSTITUTION.....119
A. Factor 1: Either Party May Request Stay 119
B. Factor 2: The Trial Schedule is Unclear 119
C. Factor 3: Petitioner's Diligence and Investment in PGR Outweighs the Parties' Minimal Investment in Litigation.....120
D. Factor 4: The Petition's Grounds Are Materially Different From Any That Might Be Raised in Litigation 120
E. Factor 5: Party Overlap.....120
F. Factor 6: The Merits of this Petition Strongly Favor Institution 120
G. Considerations Implicated by 35 U.S.C. § 325(d).....121
1. The Art and Arguments Presented are Not the Same or Substantially the Same as those Previously Presented to the Office 121
2. The Office Erred in a Manner Material to the Patentability of the Challenged Claims 123

VII. CONCLUSION.....124

VIII. PAYMENT OF FEES 124

IX. MANDATORY NOTICES UNDER 37 C.F.R § 42.8(a)(1).....124
A. Real Party-In-Interest Under 37 C.F.R. § 42.8(b)(1).....124
B. Related Matters Under 37 C.F.R. § 42.8(b)(2) 124
A. Lead And Back-Up Counsel Under 37 C.F.R. § 42.8(b)(3).....124
B. Service Information 125

LIST OF EXHIBITS

EX1001	U.S. Patent No. 11,574,372 to Stephen Barbour et al. ("the '372 Patent")
EX1002	Excerpts from the Prosecution History of the '372 Patent ("the Prosecution History")
EX1003	Declaration and Curriculum Vitae of Michael Nikolaou
EX1004	Declaration and Curriculum Vitae of Vernon Kasdorf
EX1005	WO2015123257A1 (Dickerson)
EX1006	CryptoKube brochure from the WaybackMachine dated March 5, 2016 ("CryptoKube Brochure")
EX1007	CryptoKube Bitcoin Mining Data Center Tour(CC) ("CryptoKube Video-Part1")
EX1008	CryptoKube Bitcoin Mining Data Center Tour Transcript
EX1009	Szmigielski, Albert. Bitcoin Essentials. Packt Publishing Ltd, 2016 ("Szmigielski")
EX1010	U.S. Patent Publication No. 2016/0125040 ("Kheterpal")
EX1011	PCT Patent Publication No. WO2015072989 ("Belady-989")
EX1012	U.S. Patent No. 9,394,770 ("Boot")
EX1013	Sanders, Gerald, and Johnson Space Center. "Gas Conversion Systems Reclaim Fuel for Industry." ("Sanders")
EX1014	US Patent Publication No. 2015/0368566 ("Young")
EX1015	Mining Container ~100kW by Polivka GmbH ("Bitcointalk Forum Post")

EX1016 Mining with free natural gas _ r_Bitcoin ("Reddit")

EX1017 U.S. Patent Publication No. 2014/0096837 ("Belady-837")

EX1018 U.S. Patent Publication No. 2018/0109541 ("Gleifchauf")

EX1019 Polivka Mining Container Setup on Vimeo ("Polivka Video")

EX1020 Declaration of June Ann Munford

EX1021 U.S. Patent No. 6,161,386 ("Lokhandwala")

EX1022 "Crypto you can mine from a home computer," Brave New Coin (bravenewcoin.com) (July 18, 2023)

EX1023 CryptoKube Bitcoin Mining Data Center Tour(CC) ("CryptoKube Video-Part2")

EX1024-1099 [RESERVED]

EX1100 Complaint for Patent Infringement, *Upstream Data Inc. v. Crusoe Energy Systems LLC*, Case No. 1:23-cv-01252 (D. Colo. May 18, 2023)

CLAIM LISTING

Limitation	Claim language
[1pre]	A system comprising:
[1a]	a source of combustible gas produced from a facility selected from a group consisting of a hydrocarbon production, storage, or processing facility;
[1b]	a generator connected to the source of combustible gas to receive a continuous flow of combustible gas to power the generator; and
[1c]	blockchain mining devices connected to the generator; in which:
[1c_i]	the blockchain mining devices each have a mining processor and are connected to a network interface;
[1c_ii]	the network interface is connected to receive and transmit data through the internet to a network that stores or has access to a blockchain database;
[1c_iii]	the mining processors are connected to the network interface and adapted to mine transactions associated with the blockchain database and to communicate with the blockchain database;
[1c_iv]	the network is a peer-to-peer network;
[1c_v]	the blockchain database is a distributed database stored on plural nodes in the peer-to-peer network; and
[1c_vi]	the blockchain database stores transactional information for a digital currency.
[2.0]	The system of claim 1 isolated from a sales gas line and an external electrical power grid.
[3.0]	The system of claim 1 in which: the source of combustible gas and the facility comprise a remote well selected from a group consisting of a remote oil or gas well; and the remote well is connected to produce the continuous flow of combustible gas to power the generator.
[4.0]	The system of claim 3 further comprising a combustion engine connected to the source of combustible gas and connected to drive the generator.
[7.0]	The system of claim 1 in which: the facility comprises a unit selected from a group consisting of an oil storage or processing unit; the source of combustible gas comprises the unit, which has a gas outlet connected to supply combustible gas to operate the

	generator; and the unit is connected to receive oil produced from a remote oil well.
[8.0]	The system of claim 1 in which the generator and blockchain mining devices are located adjacent to the facility.
[9.0]	The system of claim 1 in which the facility comprises a plurality of remote wells selected from a group consisting of remote oil or gas wells, and one or both of the following conditions are satisfied: the plurality of remote wells are located on a multi-well pad; or the plurality of remote wells include a satellite well.
[10.0]	The system of claim 1 in which the system is configured to modulate a power load level exerted by the blockchain mining devices on the generator, by increasing or decreasing the mining activity of the mining processor.
[11.0]	The system of claim 10 in which the system is configured to modulate the power load level by selecting one or more actions from a group of actions consisting of increasing or decreasing a maximum number of mining processors that are engaged in mining transactions.
[12.0]	The system of claim 10 in which the system is configured to modulate the power load level in response to variations in a production rate of combustible gas from the hydrocarbon production well, storage, or processing facility.
[15.0]	The system of claim 10 in which: a production rate of combustible gas from the hydrocarbon production well, storage, or processing facility varies between a daily minimum production rate and a daily maximum production rate; the controller is set to limit the power load level to above a power level producible by the generator when the production rate is at the daily minimum production rate; and a backup source, selected from a group consisting of fuel or electricity, is connected make up a shortfall in fuel or electricity, respectively, required to supply the blockchain mining devices with the power load level.
[16.0]	The system of claim 1 in which a controller is connected to operate a cooling system to maintain the blockchain mining devices within a predetermined operating range of temperature.
[17.0]	The system of claim 1 in which the blockchain mining devices are housed in a portable enclosure that is structured to one or more of form a skid or be mounted on a trailer.

[18.0]	The system of claim 17 in which the portable enclosure comprises a generator driven by an engine, which is connected to the source of combustible gas.
[19.0]	The system of any claim 18 in which the engine comprises a turbine.
[20.0]	The system of claim 17 in which the portable enclosure comprises an intermodal transport container.
[21.0]	The system of claim 17 in which the portable enclosure has the form of a box with walls, a top, and a base, with one or more access doors formed in the walls.
[22.0]	The system of claim 1 further comprising a combustible gas disposal device, at the facility, the combustible gas disposal device being connected to receive combustible gas from the source of combustible gas.
[23.0]	The system of claim 22 further comprising a valve connected upstream of the generator to receive the continuous flow of gas from the source of combustible gas, and selectively supply the continuous flow of gas to the generator, the combustible gas disposal device, or both the generator and the combustible gas disposal device, to selectively divert the continuous flow of gas to the combustible gas disposal device, the generator, or both the generator and the combustible gas disposal device, respectively.
[24pre]	A method comprising:
[24a]	producing electricity using a generator and a source of combustible gas produced at a facility selected from the group consisting of a hydrocarbon production well, storage, or processing facility, and
[24b]	operating blockchain mining devices located at the facility, respectively, using the electricity, in which:
[24c]	the generator is connected to the source of combustible gas, in which the facility is connected to produce a continuous flow of combustible gas to power the generator;
[24d_i]	the blockchain mining devices each have a mining processor and are connected to a network interface;
[24d_ii]	the network interface is connected to receive and transmit data through the internet to a network that stores or has access to a blockchain database;

[24d_iii]	the mining processors are connected to the network interface and adapted to mine transactions associated with the blockchain database and to communicate with the blockchain database;
[24d_iv]	the network is a peer-to-peer network;
[24d_v]	the blockchain database is a distributed database stored on plural nodes in the peer-to-peer network; and
[24d_vi]	the blockchain database stores transactional information for a digital currency.
[25.0]	The method of claim 24 further comprising, prior to using the source of combustible gas: one or both disconnecting or diverting the source of combustible gas from a combustible gas disposal device at the facility; and connecting the source of combustible gas to operate the blockchain mining devices.
[26.0]	The method of claim 25 in which the combustible gas disposal device comprises one or more of a flare, a vent to the atmosphere, an incinerator, or a burner.
[27.0]	The method of claim 24 further comprising: connecting the source of combustible gas to operate the blockchain mining devices; and diverting gas from a combustible gas disposal device to operate the blockchain mining devices.
[28.0]	The method of claim 24 in which the facility is selected from a group consisting of an oil or gas well that is isolated from a sales gas line and an external electrical power grid.
[29.0]	The method of claim 24 in which the source of combustible gas is a remote well selected from a group consisting of a remote oil or gas well.
[30.0]	The method of claim 24 in which producing further comprises supplying combustible gas to a combustion engine that is connected to drive the generator.
[34.0]	The method of claim 29 further comprising operating the blockchain mining devices to: mine transactions with the blockchain mining devices; and communicate wirelessly through the internet to communicate with a blockchain database.
[35.0]	The method of claim 34 further comprising modulating a power load level exerted by the blockchain mining devices on the generator, by selecting an action from a group of actions consisting

	of increasing or decreasing, a mining activity of the blockchain mining devices.
[36.0]	The method of claim 35 in which: modulating comprises modulating the power load level by increasing or decreasing a maximum number of mining processors that are engaged in mining transactions.
[37.0]	The method of claim 36 in which modulating comprises modulating the power load level in response to variations in a production rate of combustible gas from the hydrocarbon production well, storage, or processing facility.
[40.0]	The method of claim 35 in which: a production rate of combustible gas from the hydrocarbon production well, storage, or processing facility varies between a daily minimum production rate and a daily maximum production rate; modulating comprises limiting the power load level to above a power level produced by the generator when the production rate is at the daily minimum production rate; and supplying from a backup source, which is selected from a group consisting of a backup fuel or electricity source a shortfall in fuel or electricity, respectively, required to supply the blockchain mining devices with the power load level.

TABLE OF AUTHORITIES

Cases

142 S. Ct. 1113 (2022) 107
Advanced Bionics, LLC v. MED-EL Elektromedizinische Geräte GmbH, IPR20109-01469, Paper 6 at 8 (PTAB Feb. 13, 2020) 116
Alice Corp. Pty. v. CLS Bank Int'l, 573 U.S. 208, 216 (2014) 107, 113
Am. Axle & Mfg., Inc. v. Neapco Holdings LLC, 967 F.3d 1285, 1296 (Fed. Cir. 2020) 107, 108, 112
Apple Inc. v. Fintiv, Inc., IPR2020-00019, Paper 11, 5-6 (P.T.A.B. May 13, 2020) 114, 115
Apple Inc. v. Seven Networks LLC et al., IPR2020-00156, Paper 10 at 11-12 (P.T.A.B. June 15, 2020) 115
Bilski v. Kappos, 561 U.S. 593, 612 (2010) 113
Content Extraction & Transmission LLC v. Wells Fargo Bank, Nat. Ass'n, 776 F.3d 1343, 1348 (Fed. Cir. 2014) 112
Enfish, LLC v. Microsoft Corp., 822 F.3d 1327, 1336 (Fed. Cir. 2016) 108
Mayo Collaborative Services v. Prometheus Laboratories, Inc., 132 S.Ct. 1289, 1297 (2012) 108, 110, 111
Phillips v. AWH Corp., 415 F.3d 1303 (Fed. Cir. 2005) 4
Sand Revolution II, LLC v. Cont'l Intermodal Group – Trucking LLC, IPR2019-01393, Paper 24 at 7 (P.T.A.B. June 16, 2020) 114, 115
Sanderling Mgmt. Ltd. v. Snap Inc., 65 F.4th 698, 704-05 (Fed. Cir. 2023) 108, 112
SAP Am., Inc. v. Versata Dev. Grp., Inc., CBM2012-00001, 29 (Trial Decision, Jan. 9, 2013) 111
Solutran, Inc. v. Elavon, Inc., 931 F.3d 1161, 1167 (Fed. Cir. 2019) 108
Ultramercial, Inc. v. Hulu, LLC, 772 F.3d 709, 715 (Fed. Cir. 2014) 108, 109
Upstream Data Inc. v. Crusoe Energy Systems LLC, Case No. 1:23-cv-01252 (D. Colo. May 18, 2023) 119
Wellman v. Eastman Chem. Co., 642 F.3d (Fed. Cir. 2011) 4
Yu v. Apple Inc., 1 F.4th 1040, 1043 (Fed. Cir. 2021) 107, 109, 110, 112

Statutes

§ 103 115
112 4
35 U.S.C. § 325(d) 116, 118
35 U.S.C. §§ 101 4

Regulations

37 C.F.R. §42.100 4

Crusoe Energy Systems, LLC ("Petitioner") petitions for Post-Grant Review ("PGR") of claims 1-4, 7-12, 15-30, 34-37, and 40 ("Challenged Claims") of U.S. Patent 11,574,372 ("'372 patent"), assigned to Upstream Data Inc. ("Upstream" or "Patent Owner").

I. INTRODUCTION

The Challenged Claims are directed to systems and methods that include two main components: (1) a generator that runs on a combustible gas, and (2) a blockchain mining device connected to the generator. Of course, by Upstream's earliest possible priority date (February 8, 2017), neither blockchain mining devices nor generators were new.[1] Indeed, as described below, Upstream conceded as much during prosecution. [EX1002, 222-223]. The alleged novelty in Upstream's "invention" was co-locating the two devices at an oil facility, in order to utilize combustible gas produced at the facility (for example, stranded natural gas that—if allowed by regulation—might otherwise be vented into the atmosphere or burned via flaring).

As described in this Petition, not only had this been done before, but a person of skill in the art, in 2017, would have been motivated to co-locate a

[1] For the purposes of this proceeding, Petitioner does not concede that Patent Owner is entitled to this priority date.

blockchain mining device (e.g., for mining Bitcoin-brand digital currency)[2] at a source of inexpensive power, and would have done so with a reasonable expectation of success of arriving at the Challenged Claims.

Crusoe respectfully submits that PGR should be instituted, and that the Challenged Claims should be canceled as unpatentable.

II. REQUIREMENTS FOR PGR

A. Grounds for Standing and PGR Eligibility

Petitioner certifies that the '372 Patent is available for PGR. Petitioner is not barred or estopped from requesting review, has not filed a civil action regarding the '372 patent, and this Petition is being filed within nine months of the '372 patent's issuance. 37 CFR 42.201-202.

B. Challenge and Relief Requested

Petitioner requests PGR of the Challenged Claims for patent ineligible and obvious, as explained below. Dr. Michael Nickolaou and Mr. Vernon Kasdorf provide supporting explanations in their supporting declarations cited throughout this petition. EX1003 and EX1004.

---

[2] "Bitcoin" is the most popular of many available digital currency (aka cryptocurrency) brands, each of which uses a public ledger distributed across many different computing devices (i.e., a blockchain) via a network such as the Internet.

Ground	Claims	Invalidity Basis
1	1-4, 8, 16-30, 34	Obvious over Dickerson and CryptoKube, in view of Szmigielski and Kheterpal
2	1-4, 8, 10-12, 15-30, 34-37, 40	Obvious over Dickerson, CryptoKube, and Belady-989, in view of Szmigielski and Kheterpal
3	1-4, 7-12, 15-30, 34-37, 40	Obvious over Dickerson, CryptoKube, Belady-989, and Boot, in view of Szmigielski and Kheterpal
4	1-4, 8, 16-22, 24-30, 34	Obvious over MAGS and Polivka, in view Szmigielski and Kheterpal
5	1-4, 8, 10-12, 15-30, 34-37, 40	Obvious over MAGS, Polivka, and Belady-989, in view of Szmigielski and Kheterpal

The earliest claimed priority date of the '372 patent is February 8, 2017. Each of the prior art references applied in the above-listed Grounds qualifies as prior art as shown below:

Reference	Dates	Prior Art Under
Dickerson	August 20, 2015 (publication)	35 U.S.C. § 102(a)(1)
CryptoKube brochure	March 5, 2016 (publication)	35 U.S.C. § 102(a)(1)
CryptoKube video	December 18, 2014 (publication)	35 U.S.C. § 102(a)(1)
Szmigielski	February 2016 (publication)	35 U.S.C. § 102(a)(1)
Kheterpal	May 5, 2016 (publication)	35 U.S.C. § 102(a)(1)

Reference	Dates	Prior Art Under
Belady-989	May 21, 2015 (publication)	35 U.S.C. § 102(a)(1)
Boot	July 19, 2016 (issue)	35 U.S.C. § 102(a)(1)
Sanders	2015 (publication)	35 U.S.C. § 102(a)(1)
Young	December 24, 2015 (publication)	35 U.S.C. § 102(a)(1)
Bitcointalk forum post	December 18, 2015 (publication)	35 U.S.C. § 102(a)(1)
Polivka video	February 9, 2015 (publication)	35 U.S.C. § 102(a)(1)

C. CLAIM CONSTRUCTION

All claim terms should be construed according to the *Phillips* standard. *Phillips*, 415 F.3d 1303; 37 C.F.R. §42.100. Besides the specific constructions described below, no formal claim constructions are presently necessary since "claim terms need only be construed to the extent necessary to resolve the controversy." *Wellman,* 642 F.3d at 1361.

Petitioner reserves the right to respond to any constructions offered by Upstream or adopted by the Board in accordance with due process. Furthermore, Petitioner does not concede that the Challenged Claims satisfy all statutory requirements, including those under 35 U.S.C. §§ 101 and 112.

1. "blockchain mining device"

The term "blockchain mining device" should be construed as "any computing device that is capable of performing blockchain mining without regard

to processor speed or power." [EX1004, 49-50]. The '372 patent explains that "[a] blockchain is a form of database, which may be saved as a distributed ledger in a network of **nodes**," where each node "maintains a continuously-growing list of records called blocks." [EX1001, 11:46-47]. The nodes 122 are said to be "electronic devices 126, for example desktop computers, laptop computers, tablet computers, cellular telephones, servers, or other suitable devices." [EX1001, 14:30-33].

The '372 patent further explains that "mining" refers to the "computational review process performed on each block of data in a blockchain" required to "maintain[]a blockchain database." [EX1001, 13:5-7]. Importantly, in order for a node 122 (computing device) to operate as a miner with respect to a blockchain, it must simply include "mining circuitry 130 … to perform data mining operations." [EX1001, 14:44-48]. Unsurprisingly, the '372 patent admits that such "mining circuitry" may simply be "an integrated circuit chip" (i.e., a processor) with "various mining circuitry examples includ[ing] CPU (central processing unit), GPU (graphics processing unit), FPGA (Field-Programmable Gate Array), and ASIC (application specific integrated circuit)." [EX1001, 14:61-63; 17:12-15]. In other words, no special purpose hardware is required to mine blockchain transactions. Indeed, several brands of digital currencies still exist to this day that can be profitably mined using a standard computer. For example, the website

Brave New Coin reports that, although Bitcoin-brand[3] digital currency can no longer be profitably mined with a standard PC, there still exists other brands of "[c]rypto you can mine from a home computer in 2023." EX1022.

2. "mining processor"

The term "mining processor" should be construed as "any processor that is capable of performing blockchain mining without regard to processor speed or power." [EX1004, 51]. See discussion regarding "blockchain mining device" above.

3. "a continuous flow of combustible gas"

The term "a continuous flow of combustible gas" should be construed as "a flow of combustible gas that is continuous for at least a time period (e.g., an hour, a day, a week, a month, or longer)." [EX1003, 54]. This construction is supported by the '372 patent specification, which states that the load may be limited to a power level producible by the generator "for a period of time of eight, twelve, twenty-four, or more hours." [EX1001, 18:58-67]. A POSITA would have understood that the gas supply from any given oil filed is limited, and will eventually dry up. [EX1003, 54].

[3] Notably, the claims of the '372 patent are not limited to Bitcoin-brand digital currency.

4. "sales gas line"

The term "sales gas line" should be construed as "a pipeline for long-distance transportation of sales gas meeting sales-gas specifications from a hydrocarbon production, storage, or processing facility to a customer connected to the pipeline." [EX1003, 55-56]. This construction is supported by the '372 patent specification, which clearly sets out the meaning of this term: "A sales gas line may be a pipeline of more than ten km of length, in some cases more than fifty, a hundred, or two hundred, kilometers in length, and connecting between an oil and gas site and travelling to an end user, a processing site, or a distribution site." [EX1001, 7:29-33, 7:1-34]. Moreover, "[r]aw natural gas may require processing before it can be sold via a sales gas line." [EX1001, 7:1-2]. Specifically, "gas treating facilities must be designed to convert a particular raw gas mixture into a sales gas that meets the sales-gas specifications," which "may vary by jurisdiction." [EX1001, 7:20-28].

D. Level of Ordinary Skill in the Art

A POSITA would have a degree in chemical engineering, petroleum engineering, process engineering, mechanical engineering, or a similar field with 1-2 years of experience in designing power generation systems, Blockchain mining systems, or other comparable hands-on experience. [EX1003, 19]. Alternatively, a person having 3-5 years of experience in the Blockchain mining industry would

also qualify as a POSITA. *Id*. Additional education could substitute for professional experience, or vice versa. *Id*.

III. THE '372 PATENT

A. Brief Description of the '372 Patent Specification

The '372 Patent is directed to "operating a blockchain mining device using natural gas produced at a hydrocarbon production, storage, or processing site/facility." [EX1001, Abstract]; [EX1003, 30-36]. By way of background, the '372 Patent explains that "[a]t remote oil and gas facilities, excess natural gas is often wasted, for example vented to atmosphere or burned via flaring." [EX1001, 1:11-13].

Figures 1 and 2 illustrate systems for "powering a blockchain [mining device (12)] at a remote oil well [14]," with a generator (28). [EX1001, 5:53-62; 8:35-48]. Figure 1 shows "a generator [28] retrofitted to a prime mover [24], which operates a drivehead to pump oil up from the reservoir." [EX1001, 5:53-56]. That is, the blockchain mining device (12) is connected to a generator (28), which is retrofitted to an engine (24).

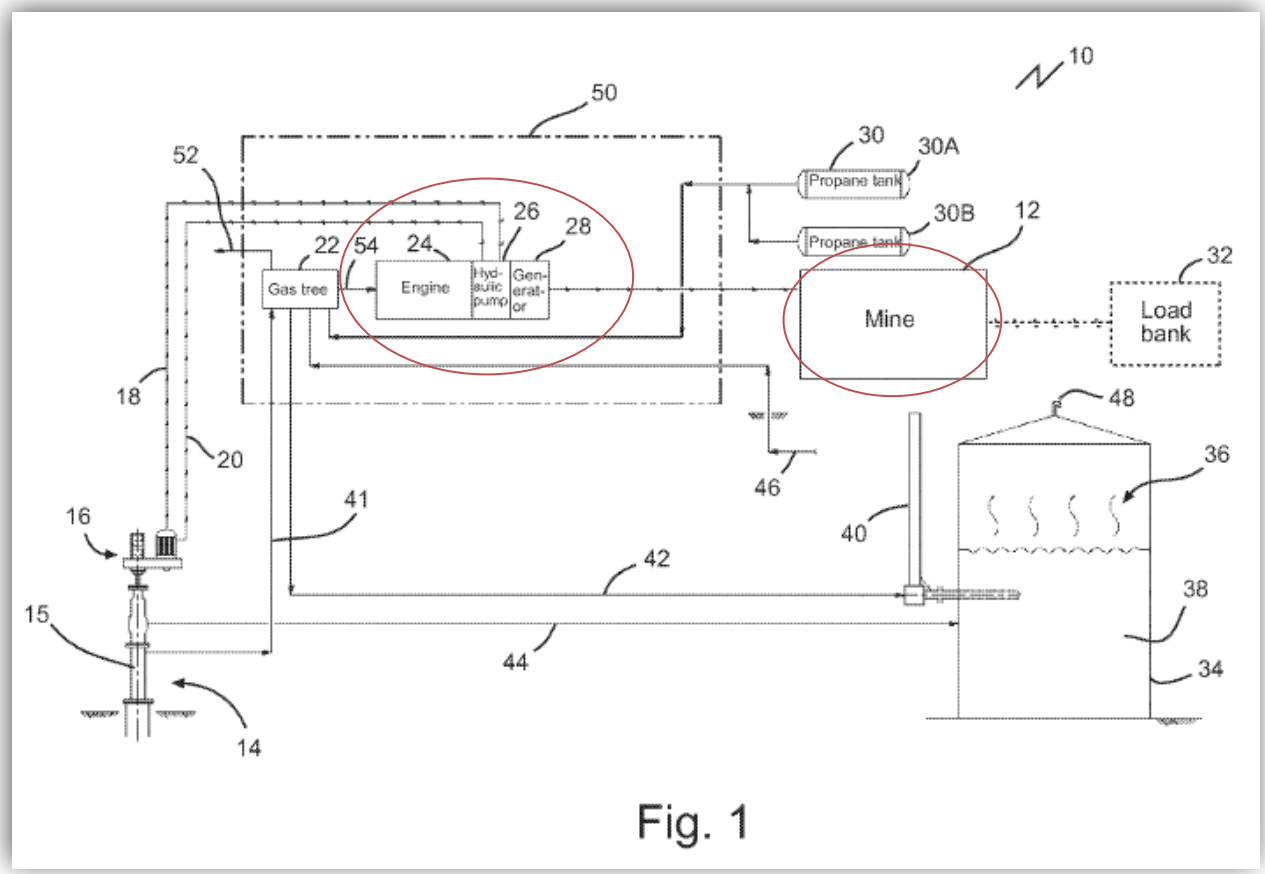

Fig. 1

Figure 2 is similar to Figure 1, but this embodiment includes two engines—one that (with a generator) powers the blockchain mining device, and one that operates the drive head. [EX1001, 5:57-62].

In another embodiment, depicted in Figure 3, "a generator and engine are connected to be powered by combustible gas taken off an oil storage unit to power the blockchain main." [EX1001, 5:63-67].

The commonality is that in each case, a blockchain mining device is connected to a generator that runs on combustible gas, namely, natural gas at an oil

well or oil storage unit. [EX1003, 34].

B. Prosecution History of the ’372 Patent

The ’372 Patent was filed with 41 claims. EX1002, 686-691. Before any office actions had been mailed, a third-party submission cited a prior art Reddit posting. [EX1016; EX1002, 439-447]. According to the submitter, the Reddit posting “discloses a source of combustible gas, a generator that generate[s] electricity from combustion of the gas, and a blockchain mining device.” EX1002, 440. In response, the Office informed applicant that the submission “reads adequately on the independent claims,” and suggested that “[m]oving forward, [applicant should] draft[] independent claims that clearly unite the combustible gas production elements and the block chain mining elements.” [EX1002, 348]. Regarding the dependent claims, the Office indicated that “[a]llowable subject matter may reside in dependent claims 12–18,” but that “further searching [would be] required.” [EX1002, 348].

Subsequently, the Office issued an Office Action rejecting the claims as obvious over Belady-837 and Gleifchauf. EX1002, 336. The Office took the position that Belady-837 disclosed using a gas generator to power a data center, and Gleifchauf disclosed using servers for blockchain mining and verification. EX1002, 336-337. The Office noted that combining the two would have been obvious because Belady-837 discloses that “data centers are being located in areas

where natural resources, from which electrical power can be derived, are abundant and can be obtained inexpensively. For example, natural gas is a byproduct of oil drilling operations and is often considered a waste byproduct since it cannot be economically captured and brought to the market." [EX1002, 336-337 (quoting EX1017, [0004])].

To overcome the obviousness rejection, Upstream amended the claims to their present form, and argued that its system uses "flare gas" as opposed to "sales gas." [EX1002, 222-223]. Applicant also argued that blockchain mining is different from traditional data-processing because it requires more energy. [EX1002, 222-223]. Applicant argued that its "discovery amounts to a new use for previously known individual components (a common precursor for patentability), and may provide numerous benefits including the reduction of greenhouse gas emissions and capture of revenue where gas disposal is otherwise a capital loss (for example paragraphs 33, 34, 48, and 73). [EX1002, 223].

On August 31, 2022, a notice of allowance was mailed. EX1002, 4-9. In the "Reasons for Allowance," the Office indicated that:

> The assertions and arguments provided by the Applicant credibly declare and make clear that the independent claims and the limitations contained therein are allowable either in part or taken as a whole over the prior art of record. None of the art of record, taken individually or combination, disclose at least the method step or system components contained within the independent claims.… Moreover, even though the

> individual references applied in the prior art may teach each individual limitation sufficiently, there does not appear to be sufficient grounds for combining or modifying the prior art of record to adequately arrive at the claimed invention.

The ’372 patent issued shortly after a Rule 312 amendment (amending claims 15, 16, 18, 31, 37, 38, 40 to recite “hydrocarbon production well, storage, or processing facility”). [EX1002, 20-29]; [EX1003, 37-47].

IV. THE CHALLENGED CLAIMS ARE UNPATENTABLE UNDER 35 U.S.C § 103

A. GROUND 1 (Dickerson and CryptoKube, in view of Szmigielski and Kheterpal)

1. Overview of Dickerson

PCT Publication No. 2015/123,257 (“Dickerson”) describes a mobile power generation system that can generate electricity using flare gas (raw natural gas that is to be flared) at an oil and gas production facility. [EX1005, Abstract, [0002]]; [EX1003, 58-64]. Dickerson explains that “[g]as flared as a byproduct of oil drilling in the Bakken Field releases millions of tons of carbon dioxide into the atmosphere every year, causing considerable environmental concerns” and “a number of oil and gas field facilities where gas is being flared rely on diesel-powered electrical generating units for electricity needed to run the facilities.” [EX1005, [0003], [0004]].

Dickerson discloses that it seeks to “reduce costs associated with diesel-

powered electrical generating units, to eliminate undesirable emissions generated by **flaring natural gas**, and to reduce emissions from the generation of electricity used to operate oil and gas field facilities, since electricity produced by gas engines results in fewer harmful emissions than electricity produced by diesel-fuel engines."[4] [EX1005, [0010]].

Dickerson's system includes (1) one membrane separation unit for separating useful fuel gas from raw natural gas produced at an oil or gas production facility, (2) a gas engine that uses the fuel gas to generate electricity that is returned to the facility, and (3) a control panel for operating the apparatus. [EX1005, [0005]]. FIG. 1 of Dickerson shows one setup of its combined gas conditioning and power generation system. [EX1005, [0008]]. As shown in FIG. 1, gas genset 102 includes a gas engine 110 and a generator 112 that is driven by the engine 110. [EX1005, [0026]].

[4] Unless indicated otherwise, bold means emphasis added.

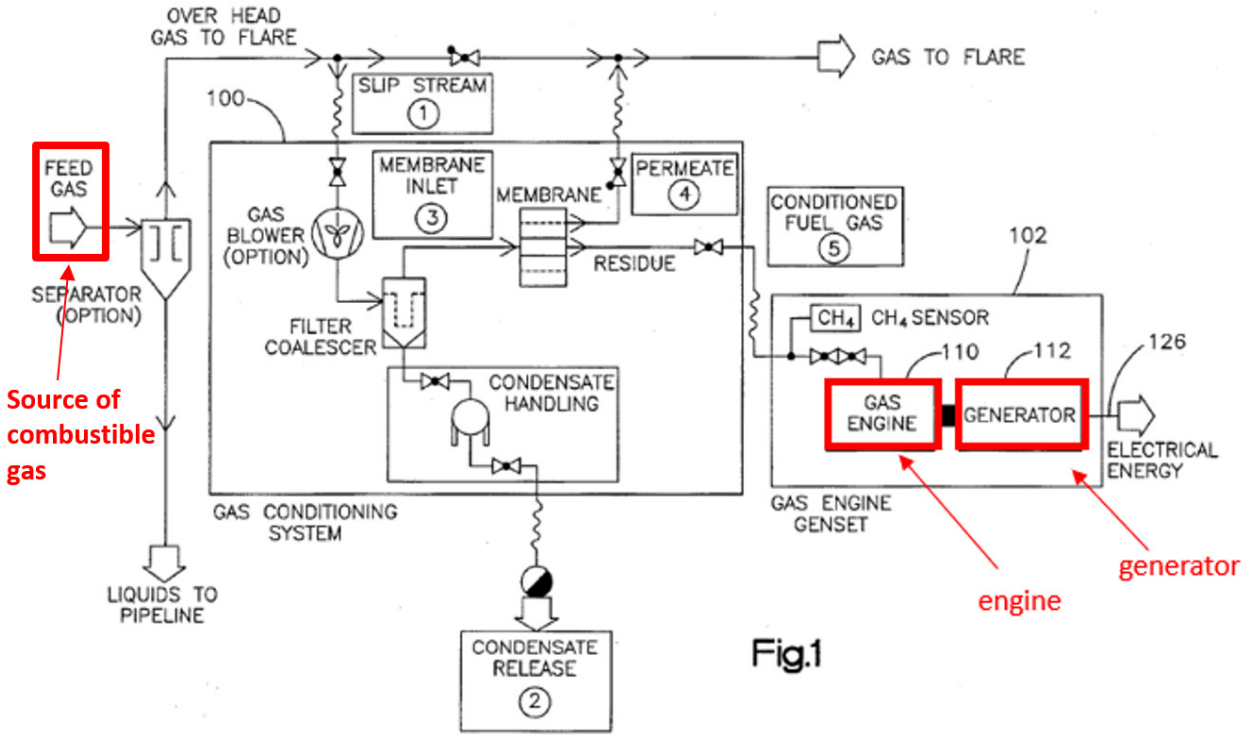

[EX1005, FIG. 1 (annotated)].

Dickerson further discloses that a chiller unit can be included to remove natural gas liquids (NGLs) from the raw natural gas stream, and to further reduce the flaring of raw natural gas. [EX1005, [0022]].

Dickerson discloses that its mobile power generation system can be delivered in a 40-foot-long ISO container. [EX1005, [0014]]. Dickerson explains that the container and its contents together define a self-contained, mobile flare gas processing unit that provides a user with electrical power output but requires only feed gas input from the user. [EX1005, [0026]]. Dickerson envisions using the generated electricity for both local consumption and for export. [EX1005, [0039]]; [EX1003, 64].

2. Overview of the CryptoKube system

The CryptoKube system ("CryptoKube") is a commercialized industrial Bitcoin mining system that can be easily shipped to any location that has cheap power and can mine Bitcoin or other digital currencies. [EX1006, 1-4]; [EX1003, 65-67]; [EX1004, 63-64]. CryptoKube is built inside an ISO shipping container and is filled with spondooliestech SP35 servers. [EX1006, 4]. CryptoKube uses fans (fresh air cooling) to move large volumes of air through the data center to cool the servers and remove the hot air exhaust. [EX1006, 1, 4].

CryptoKube is built inside an ISO shipping container with walls, a top, and a base, with an access door formed in the walls. CyptoKube can run inside a large warehouse, outside in a parking lot or in a server pod farm where the power is cheapest. [EX1006, 1-4]; [EX1007, 0:01:08]; [EX1004, 64].

[EX1007, 0:01:08].

3. Overview of Szmigielski

Szmigielski is a book titled "Bitcoin Essentials," where the author reviewed the mining of Bitcoin—how new Bitcoins are created and how transactions are accepted into the Bitcoin blockchain. [EX1009, 12]; [EX1003, 68-71]; [EX1004, 65-67]. Chapter 1 reviews Bitcoin wallets and mining software. Chapters 2-5 cover CPU, GPU, FPGA, and ASIC mining. Chapter 6 talks about solo versus pool mining. Chapter 7 talks about large scale mining, and Chapter 8 discusses the future of Bitcoin mining. [EX1009, 13].

The Bitcoin database that stores all the transaction data is called a

"blockchain." [EX1009, 17]. Mining software coordinates and manages the work of different mining devices. [EX1009, 29]. Electricity is a big part of the cost of mining, and it is very important to set up a mining operation where electricity is cheap or perhaps even free. [EX1009, 86].

Industrial miners face almost the same issues as data centers: access to **relatively cheap power**, **good network access**, access to latest hardware, and stable political climate. [EX1009, 88]. One of the biggest costs for Blockchain miners is the cost of electricity. [EX1009, 90]. Electricity is needed in both running the hardware and the associated cooling systems, be it fans or air conditioning. *Id*. Miners, therefore, seek out locations where electricity is fairly priced. *Id*. In North America, the biggest industrial Blockchain mine is located in eastern Washington state due to the abundance of inexpensive hydroelectric power. *Id*.

4. Overview of Kheterpal

US Patent Publication No. 2016/0125,040 ("Kheterpal") discloses the design and operation of a digital currency miner chip. [EX1010, Abstract]; [EX1003, 72-75]; [EX1004, 68-70]. FIG. 1 is an illustrative diagram of a peer-to-peer network 100 that may operate according to the Bitcoin protocol. [EX1010, [0030]]. Network 100 includes plural nodes 10 that are coupled to other nodes via paths 12 (e.g., Internet) and nodes 10 may be electronic devices such as desktop computers, laptop computers, cellular telephones, servers, or other electronic devices that

implement the Bitcoin protocol. *Id*.

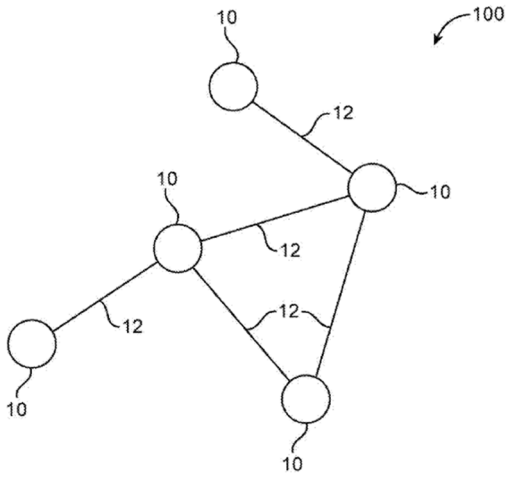

FIG. 1

[EX1010, FIG. 1]

Nodes 10 may communicate to maintain a public, global ledger (e.g., Bitcoin database) of all official transactions, and each node 10 may store a copy of the global ledger (e.g., a complete copy or only a partial copy). [EX1010, [0031]]; [EX1004, 69]. Transactions added to the global ledger by each node 10 may be verified by other nodes 10 to help ensure validity of the ledger. *Id*.

The Bitcoin protocol defines a system in which the creation and distribution of the Bitcoin digital currency is governed by consensus among a peer-to-peer network. [EX1010, [0004]]. The network maintains a public ledger distributed across multiple computing devices in which new transactions are verified and recorded by members of the network via cryptography. *Id*. The operations of

verifying and recording transactions of cryptocurrencies such as transactions in the Bitcoin digital currency are sometimes referred to as mining, because completion of each mining operation typically rewards the miner with newly created digital currency (e.g., Bitcoins). *Id*. Verified transactions and newly created Bitcoins are recorded in the public ledger. *Id*. The public ledger serves as an official history of transactions. *Id*. The amount of digital currency owned by any entity may be determined from the public ledger. *Id*.

5. The combination of Dickerson and CryptoKube

A POSITA would have been motivated to combine Dickerson with CryptoKube, among other reasons, because Dickerson discloses a mobile power generation system that can generate electricity using flare gas (raw natural gas that is to be flared) at an oil and gas production facility. [EX1003, 91-99]; [EX1004, 89-97]; [EX1005, Abstract, [0002]]. Dickerson discloses that the power generated may be more than the power required on an oil field pumping site, and that its system can provide power not only for local consumption but also for export to the grid at the same time if utility power lines are accessible. [EX1005, [0039]]. Dickerson also discloses that oil and gas production facilities are typically located in remote areas where no utility power is available. [EX1005, [0024]]. Thus, a POSITA would have understood that Dickerson's system can generate free or cheap excess electricity while being isolated from the grid (e.g., because no utility

power lines are accessible). [EX1003, 91-93]; [EX1004, 89-91].

Smigielski discloses that access to cheap power is desired because one of the biggest costs for digital currency miners is the cost of electricity.[EX1009, 90]. A POSITA would have been motivated to couple a device capable of digital currency mining to Dickerson's system to utilize the free excess electricity. [EX1003, 94-95]; [EX1004, 92-93]. CryptoKube discloses a mobile Bitcoin miner that can be easily transported to a remote oil and gas production facility. [EX1006, 1-4]. A POSITA would have found it obvious to couple CryptoKube with Dickerson's system to utilize the free excess electricity. [EX1003, 96-97]; [EX1004, 94-95].

Both the Dickerson system and CryptoKube are containerized and built inside an ISO shipping container to confer better mobility. [EX1005, [0014]]; [EX1006, 1-4]. Thus, it is easy to combine the two by (1) connecting the two systems or (2) placing the respective equipment of the two containers into a single container. [EX1003, 98]; [EX1004, 96].

In the Dickerson-CryptoKube combination, the combined device would have (1) Dickerson's mobile power generation system; and (2) CryptoKube's mobile Bitcoin miner, wherein the Bitcoin mining devices (spondooliestech SP35 servers) are connected to and powered by Dickerson's generator. [EX1003, 99]; [EX1004, 97].

6. Analysis

Limitation [1pre]

To the extent the preamble is limiting, the Dickerson-CryptoKube combination renders [1pre] obvious. [EX1003, 101]. For example, Dickerson describes a mobile power generation system that can generate electricity using flare gas (raw natural gas that is to be flared) at an oil and gas production facility. [EX1005, Abstract, [0002]]. CryptoKube also discloses a Bitcoin miner system. [EX1006, 1-4].

Limitation [1a]

Dickerson discloses a mobile system "for processing and using raw natural gas that is normally flared at the site of oil and gas field operation facilities." [EX1005, [0002].] Specifically, Dickerson discloses a membrane separation unit for separating useful fuel gas from **raw natural gas produced at an oil or gas production facility** (i.e., the claimed "hydrocarbon production" facility), and a gas engine that uses the fuel gas to generate electricity. [EX1005, [0006]]. Thus, Dickerson discloses [1a]. [EX1003, 102-103].

Limitation [1b]

Dickerson discloses that the "gas genset 102 includes a gas engine 110 and a generator 112 that is driven by the engine 110." [EX1005, [0026]]. As shown in FIG. 1, the generator 112 is connected (via the gas conditioning system 100) to the

source of combustible gas to receive a continuous flow of combustible gas to power the generator. [EX1003, 104].

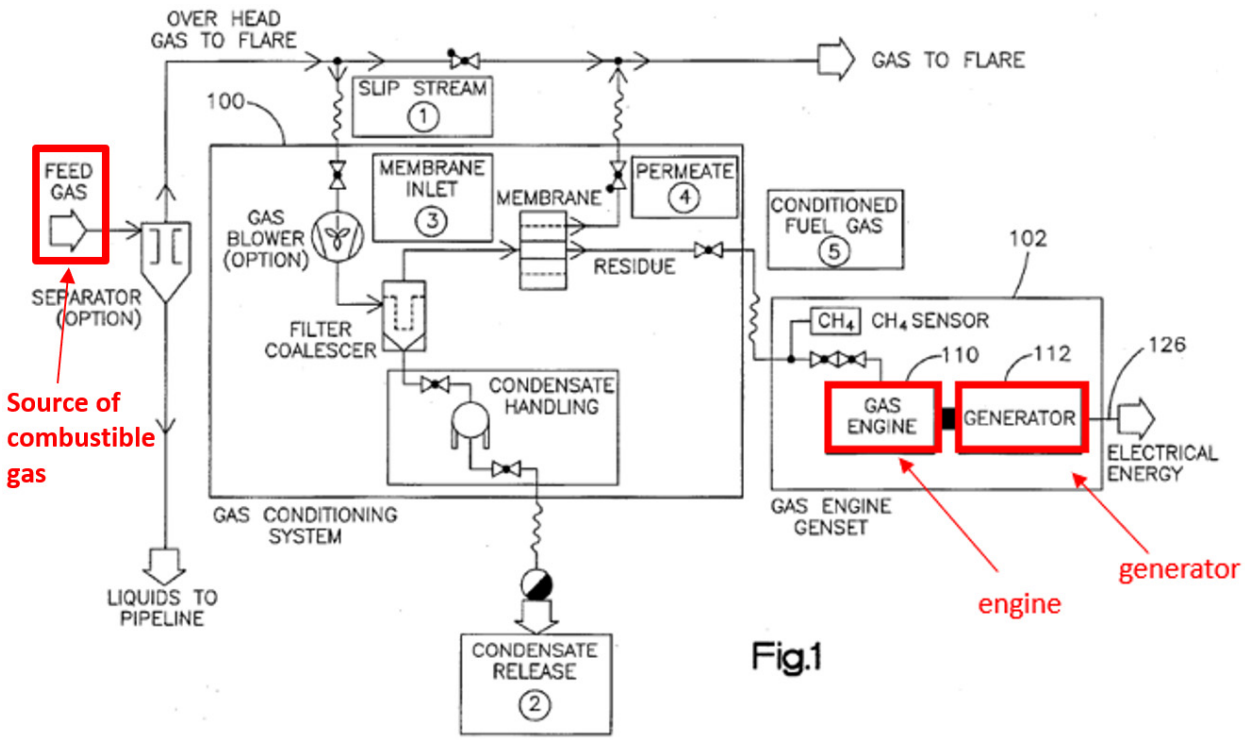

[EX1005, FIG. 1 (annotated)].

To the extent that Upstream argues the generator needs to be "directly" connected to the source of combustible gas, Dickerson also discloses that "the gas may be of sufficient quality to burn directly out of the well without any membrane treatment." [EX1005, [0039]]; [EX1003, 105].

Dickerson further discloses a continuous flow of combustible gas (e.g., natural gas) because it discloses that "[i]n an application where the facility operator contemplates times when raw natural gas flow will be interrupted, a stand-by diesel generator is provided." [EX1005, [0021]]; [EX1003, 106].

Thus, Dickerson discloses [1b]. [EX1003, 104-107].

Limitation [1c]

As discussed above in Section IV.A.5, in the Dickerson-CryptoKube combination, the combined device would have (1) Dickerson's mobile power generation system; and (2) CryptoKube's mobile Bitcoin miner, wherein the Bitcoin mining devices (spondooliestech SP35 servers) are connected to and powered by Dickerson's generator. [EX1003, 108-109].

Limitation [1c_i]

CryptoKube is built inside an ISO shipping container and is filled with spondooliestech SP35 servers, that is, blockchain mining devices, each necessarily having a mining processor. [EX1006, 1-4]. CryptoKube also provides "a best of class internet firewall." [EX1006, 4]. CryptoKube contains routers. [EX1023, 00:00:11]

[EX1023, 00:00:11].

A POSITA would have understood that to mine digital currency, the miners need to be connected to a network interface (e.g., a modem or a router) in order to access a distributed, blockchain database that is shared across a network. [EX1004, 104-105]. Thus, CryptoKube meets [1c_i].

Limitation [1c_ii]

CryptoKube is built inside an ISO shipping container and is filled with Bitcoin miners, namely, spondooliestech SP35 servers. [EX1006, 1-4]. A POSITA would have understood that to mine Bitcoin, the Bitcoin miner needs to receive and transmit data through the internet to a network that stores or has access to a blockchain database, that is, a distributed database that is shared across a network

and stores information in blocks. For example, Kheterpal explains that the Bitcoin protocol defines a system in which the creation and distribution of the Bitcoin digital currency is governed by consensus among a peer-to-peer network. [EX1004, 106-107]; [EX1010, [0004]].

Limitation [1c_iii]

CryptoKube is built inside an ISO shipping container and is filled with Bitcoin miners such as spondooliestech SP35 servers. [EX1006, 1-4]. A POSITA would have understood that to mine Bitcoin, the mining processors need to be connected to a network interface and adapted to mine transactions associated with the blockchain database and to communicate with the blockchain database, which is implemented as a public ledger distributed among many peer-to-peer devices connected to the Internet. [EX1004, 108-109]; [EX1010, [0004]].

Limitation [1c_iv]

A POSITA would have understood that Bitcoin mining is conducted on a peer-to-peer network, because the Bitcoin protocol defines a system in which the creation and distribution of Bitcoin digital currency is governed by consensus among a peer-to-peer network. [EX1004, 110]; [EX1010, [0004]]. Thus, a POSITA would have found it obvious that the network is a peer-to-peer network. [EX1004, 111].

Limitation [1c_v]

A POSITA would have understood that in the Bitcoin network, the blockchain database is necessarily a distributed database stored on plural nodes in the peer-to-peer network. Indeed, that is the very definition of "blockchain." [EX1004, 112-113]; [EX1010, [0004]].

Limitation [1c_vi]

A POSITA would have understood that in a Bitcoin network, the blockchain database stores transactional information for a digital currency, which is sole purpose of the Bitcoin-brand digital currency. [EX1004, 114-115]; [EX1010, [0004]].

Limitation [2.0]

Dickerson discloses a mobile system "for processing and **using raw natural gas that is normally flared at the site** of oil and gas field operation facilities." [EX1005, [0002]]. Dickerson explains that the gas needs to be flared "because of the lack of gas pipeline takeaway capacity." [CROSUE-1005, [0003]]. Dickerson also discloses that its system allows "utilizing field gas directly and avoids [the need] to move the gas from a remote float/station to a processing field line before utilizing." [EX1005, [0036]]. Thus, Dickerson discloses that, because none is available, the system is isolated from a sales gas line. [EX1003, 116].

Dickerson also discloses that "the system can provide power for both local consumption and also for export to the grid at the same time **if the power lines are**

accessible from the site." [EX1005, [0039]]. Dickerson also discloses that oil and gas production facilities are typically located in remote areas where no utility power is available. [EX1005, [0024]]. Dickerson also discloses that the "generated electricity powers either a **local grid (island [meaning "isolated"] operation)** or will be fed into the main grid." [EX1005, claim 4]. A POSITA would have understood that Dickerson covers both situations – the generated electricity can be consumed locally and fed to a power grid provided one is available, or, when no power grid is available (i.e., Dickerson's system is isolated from any external electrical power grid), the generated electricity will be consumed locally only.

Thus, Dickerson discloses the situation that the system is isolated from an external electrical power grid. [EX1003, 117].

As such, Dickerson discloses [2.0].

Limitation [3.0]

Dickerson describes a mobile power generation system that can generate electricity using "flare gas" (raw natural gas that is to be flared) at an oil and gas production facility. [EX1005, Abstract, [0002]]. Dickerson explains that oil and gas production facilities are typically located in **remote** areas where no utility power is available. [EX1005, [0024]]. Dickerson discloses that one or more power-generating containers can be moved as an operator expands or contracts its drilling sites to different or additional **remote** locations. [EX1005, [0024]]; [EX1003, 119].

Dickerson further discloses that the gas engine genset is compact, containerized/skid mounted, and mobile which makes the system particularly suitable for **remote** sites. [EX1005, [0027]]. Dickerson discloses that its system allows "utilizing field gas directly and avoids [the need] to move the gas from a **remote float/station** to a processing field line before utilizing." [EX1005, [0036]]; [EX1003, 120].

Dickerson further discloses a continuous flow of combustible gas (e.g., natural gas) because it discloses that "[i]n an application where the facility operator contemplates times when raw natural gas flow will be interrupted, a stand-by diesel generator is provided." [EX1005, [0021]]; [EX1003, 121].

Thus, Dickerson discloses [3.0].

Limitation [4.0]

Dickerson discloses that the "gas genset 102 includes a gas engine 110 and a generator 112 that is driven by the engine 110." [EX1005, [0026]]. As shown in FIG. 1, the generator 112 is connected (via the gas conditioning system 100) to the source of combustible gas to receive a continuous flow of combustible gas to power the generator. [EX1003, 123].

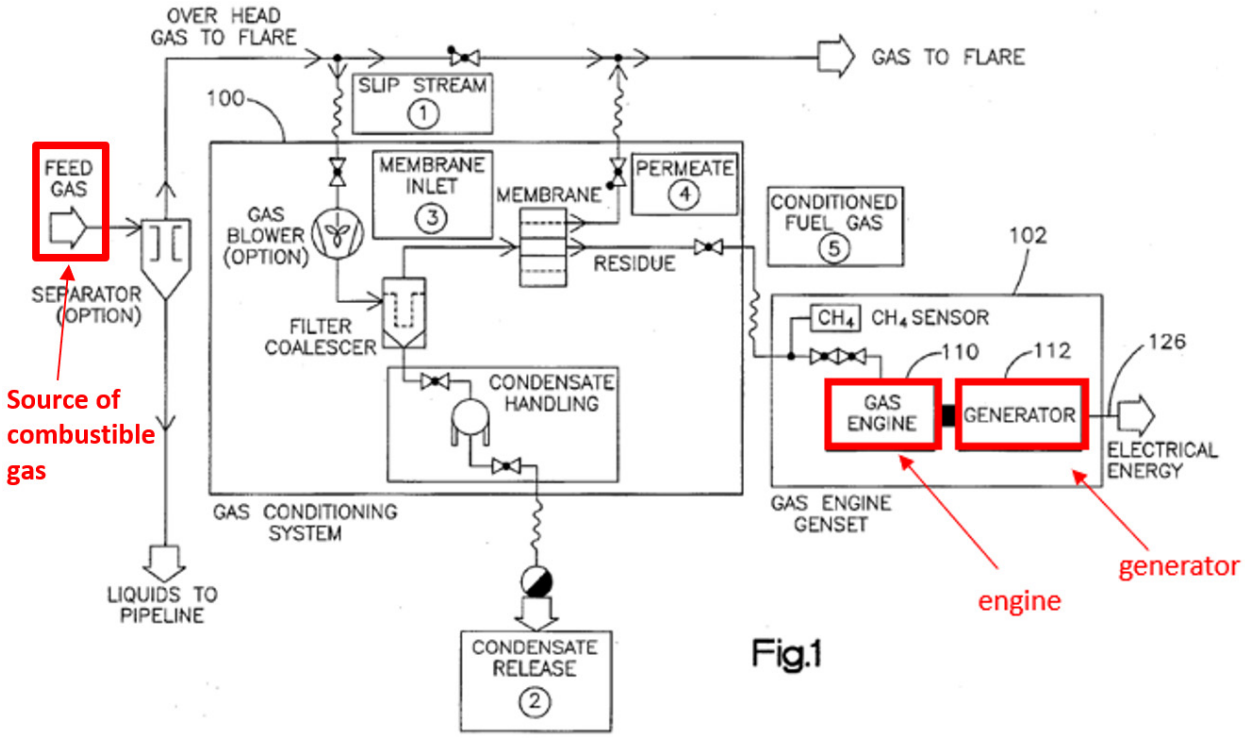

[EX1005, FIG. 1 (annotated)].

To the extent that Upstream argues the generator needs to be "directly" connected to the source of combustible gas, Dickerson also discloses that "the gas may be of sufficient quality to burn directly out of the well without any membrane treatment." [EX1005, [0039]]; [EX1003, 124].

Dickerson discloses that examples of suitable gas engines are illustrated in U.S. Patent 6,161,386 (depicting a **combustor**, turbine, and electricity generator). [EX1005, [0021]]. Thus, Dickerson discloses a combustion engine (gas engine 110) connected to the source of combustible gas and connected to drive the generator (generator 112). [EX1003, 123-126].

Limitation [8.0]

As discussed above, in the Dickerson-CryptoKube combination, the combined device would have (1) Dickerson's mobile power generation system; and (2) CryptoKube's mobile Bitcoin miner, wherein the Bitcoin mining devices (spondooliestech SP35 servers) are connected to and powered by Dickerson's generator. Both the Dickerson system and CryptoKube are containerized and built inside an ISO shipping container to confer better mobility. [EX1005, [0014]]; [EX1006, 1-4]; [EX1003, 128].

Dickerson discloses that the gas engine genset is compact, containerized/skid mounted, and mobile which makes the system particularly suitable for remote sites. [EX1005, [0027]]. Dickerson discloses that its system allows "utilizing field gas directly and avoids [the need] to move the gas from a remote float/station to a processing field line before utilizing." [EX1005, [0036]]; [EX1003, 129].

CryptoKube is built inside an ISO shipping container that is easy to relocate and CyptoKube can run inside a large warehouse, outside in a parking lot or in a server pod farm where the power is cheapest. [EX1006, 1-4]; [EX1003, 130].

Thus, the combined device is mobile, and in order to save infrastructure costs and to avoid transporting the flare gas over a long distance, a POSITA would have found it obvious that the generator and blockchain mining devices are located adjacent to the facility (e.g., within one hundred meters). [EX1003, 127-132].

Limitation [16.0]

CryptoKube uses fans (fresh air cooling) to move large volumes of air through the data center to cool the servers and remove the hot air exhaust. [EX1006, 1, 4]; [EX1004, 125-129].

CryptoKube includes a programmable logic controller (PLC) and a fan controller (which controls the speed of the fans), to keep the temperatures automatically. [EX1007, 0:05:41]; [EX1004, 126].

[EX1007, 0:05:41].

Further, CryptoKube includes one or more temperature sensors to help maintain the operating temperature of the blockchain mining devices. [EX1004,

127].

[EX1023, 0:02:00].

Thus, CryptoKube includes a connected controller operating a cooling system to maintain the blockchain mining devices within a predetermined operating range of temperature. [EX1004, 128-129].

Limitation [17.0]

Both the Dickerson system and CryptoKube are containerized and built inside an ISO shipping container to confer better mobility. [EX1005, [0014]]; [EX1006, 1-4]. Thus, it is easy to combine the two by simply placing the respective equipment of the two ISO shipping containers into a single container. A

POSITA would have been motivated to do so because it would save on transportation costs and reduce the system footprint. [EX1003, 134]; [EX1004, 130]. Dickerson discloses that the gas engine genset is compact, **containerized/skid mounted**, and mobile which makes the system particularly suitable for remote sites. [EX1005, [0027]]. Dickerson discloses that the mobile platform (container) is a part of a vehicle trailer. [EX1005, claim 3]. CryptoKube is built inside an ISO shipping container that is easy to relocate. [EX1006, 1-4]; [EX1007, 0:01:08].

[EX1007, 0:01:08].

Thus, in the combined device, the blockchain mining devices are housed in a

portable enclosure that is structured to one or more of form a skid or be mounted on a trailer. [EX1003, 134-136]; [EX1004, 130-132].

Limitation [18.0]

Both the Dickerson system and CryptoKube are containerized and built inside an ISO shipping container to confer better mobility. [EX1005, [0014]]; [EX1006, 1-4]. Thus, it is easy to combine the two by simply placing the respective equipment of the two ISO shipping containers into a single container. A POSITA would have been motivated to do so because it would save transportation costs and reduce system footprint. [EX1003, 137]; [EX1004, 133]. Dickerson discloses that the gas engine genset is compact, **containerized/skid mounted**, and mobile which makes the system particularly suitable for remote sites. [EX1005, [0027]]. Dickerson discloses that the mobile platform (container) is a part of a vehicle trailer. [EX1005, claim 3].

Dickerson's system includes (1) one membrane separation unit for separating useful fuel gas from raw natural gas produced at an oil or gas production facility, (2) a gas engine that uses the fuel gas to generate electricity that is returned to the facility, and (3) a control panel for operating the apparatus. [EX1005, [0005]]. FIG. 1 of Dickerson shows one setup of its combined gas conditioning and power generation system. [EX1005, [0008]]. As shown in FIG. 1, gas genset 102 includes a gas engine 110 and a generator 112 that is driven by the

engine 110. [EX1005, [0026]].

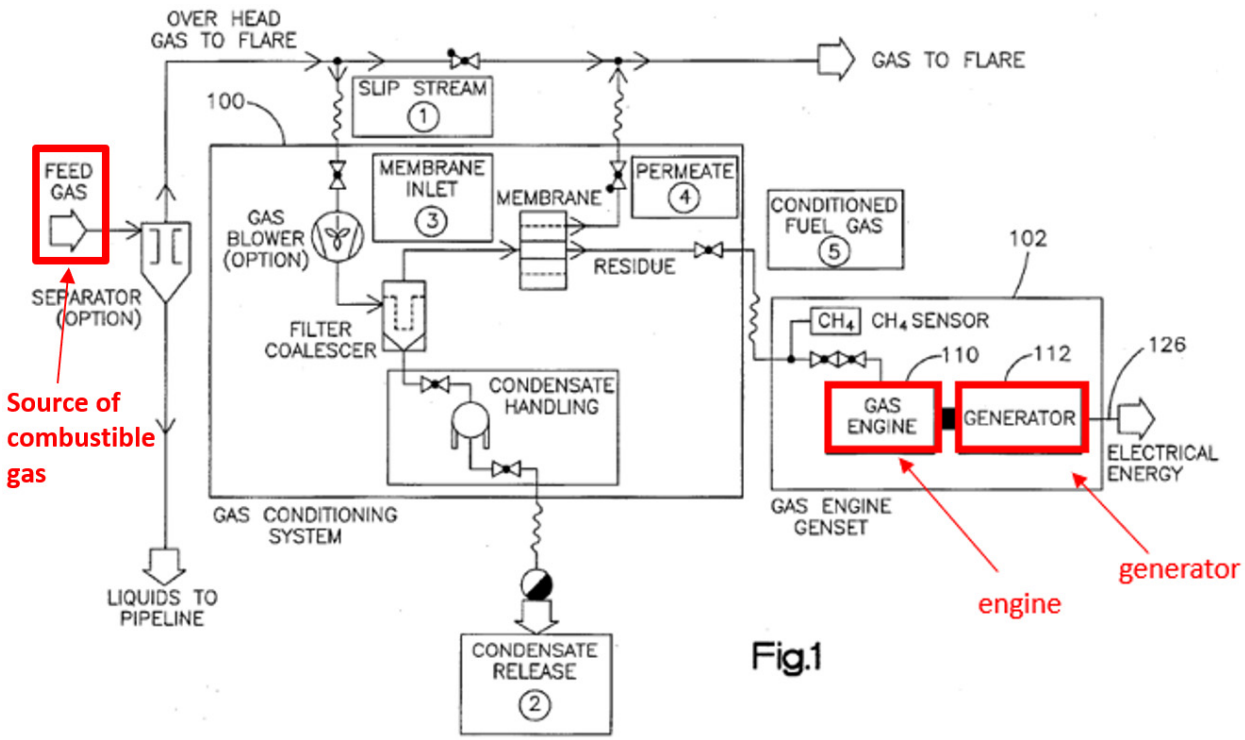

[EX1005, FIG. 1 (annotated)]

Thus, in the combined device, the portable enclosure (ISO container) comprises a generator driven by an engine, which is connected to the source of combustible gas. [EX1003, 137-140]; [EX1004, 133-136].

Limitation [19.0]

Dickerson discloses that examples of suitable gas engines are illustrated in Lokhandwala (See FIG. 1 of Lokhandwala, depicting a combustor 105, **turbine 108**, and electricity generator 111). [EX1005, [0021]] (citing [EX1021, FIG. 1]). Thus, Dickerson discloses a combustion engine (gas engine 110) connected to the

source of combustible gas and connected to drive the generator (generator 112). [EX1003, 142].

Thus, Dickerson discloses that the engine comprises a turbine. [EX1003, 141-143].

Limitation [20.0]

Both Dickerson and CryptoKube are containerized and built inside an ISO shipping container to confer better mobility. [EX1005, [0014]]; [EX1006, 1-4]. Dickerson discloses that the gas engine genset is compact, containerized/skid mounted, and mobile which makes the system particularly suitable for remote sites. [EX1005, [0027]]. CryptoKube is built inside an ISO shipping container with walls, a top, and a base, with an access door formed in the walls. [EX1007, 0:01:08]. [EX1003, 144]; [EX1004, 138].

[EX1007, 0:01:08].

Thus, in the combined device, the portable enclosure comprises an intermodal transport container (an ISO container). [EX1003, 144-146]; [EX1004, 138-140].

Limitation [21.0]

Both the Dickerson system and CryptoKube are containerized and built inside an ISO shipping container to confer better mobility. [EX1005, [0014]]; [EX1006, 1-4]. Dickerson discloses that the gas engine genset is compact, containerized/skid mounted, and mobile which makes the system particularly suitable for remote sites. [EX1005, [0027]]. CryptoKube is built inside an ISO

shipping container in the form of a box with walls, a top, and a base, with an access door formed in the walls. [EX1007, 0:01:08]. [EX1003, 147]; [EX1004, 141].

[EX1007, 0:01:08].

Thus, in the combined device, the portable enclosure has the form of a box with walls, a top, and a base, with one or more access doors formed in the walls. [EX1003, 147-149]; [EX1004, 141-143].

Limitation [22.0]

Dickerson's system includes a gas disposal device at least because it includes a flare, which is one of the types of gas disposal devices disclosed in the

‘372 patent. [EX1001, 11:41-44; EX1005, [0028]]; [EX1003, 150-155]. FIG. 1 of Dickerson shows one setup of its combined gas conditioning and power generation system. [EX1005, [0008]]. As shown in FIG. 1, the inlet gas enters the filter coalescer which removes any liquid condensates/aerosols (#2) formed and the overhead gas next enters the membrane vessels, which split the inlet (#3) into two streams—the membranes preferentially permeate the heavy hydrocarbons, CO2, water and H2S, and the resulting permeate stream (#4) is flared. [EX1005, [0028]]; [EX1003, 151].

Thus, Dickerson discloses a combustible gas disposal device (a flare), at the facility, the combustible gas disposal device being connected to receive combustible gas from the source of combustible gas. [EX1003, 152].

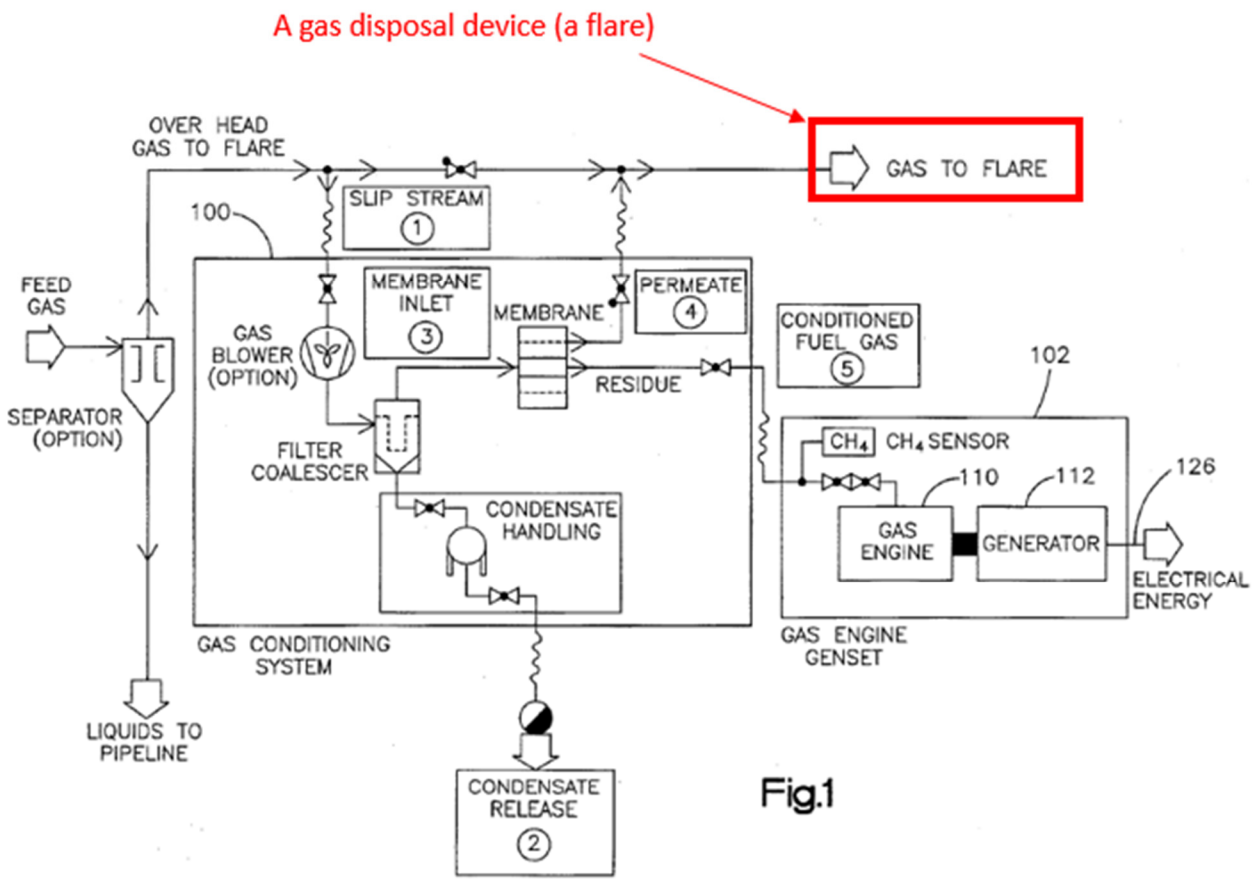

[EX1005, FIG. 1 (annotated)].

Limitation [23.0]

FIG. 1 of Dickerson shows one setup of its combined gas conditioning and power generation system. [EX1005, [0008]]. As shown in FIG. 1, a valve is connected upstream of the generator 112, and can selectively supply the continuous flow of gas from the feed gas either (1) to the flare, or (2) to the gas conditioning system 100, or both. [EX1003, 156].

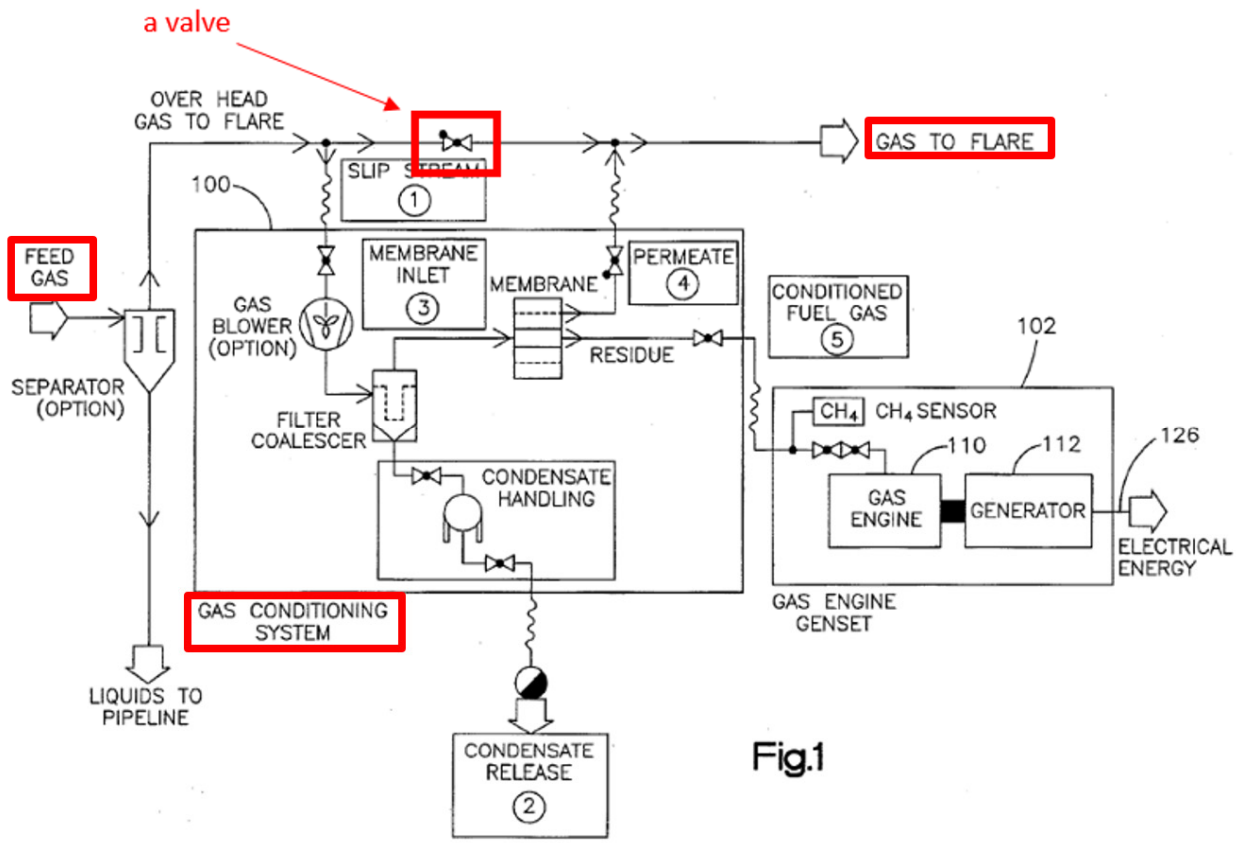

[EX1005, FIG. 1].

Thus, Dickerson discloses a valve connected upstream of the generator to receive the continuous flow of gas from the source of combustible gas, and selectively supply the continuous flow of gas to the generator (genset 102), the combustible gas disposal device (the flare), or both the generator and the combustible gas disposal device, to selectively divert the continuous flow of gas to the combustible gas disposal device, the generator, or both the generator and the combustible gas disposal device, respectively. [EX1003, 156-158]. By adjusting this valve, Dickerson can selectively supply and selectively divert the continuous

flow of gas to either one or both of the flare and the generator. *Id*.

Limitation [24pre]

To the extent the preamble is limiting, the Dickerson-CryptoKube combination renders [24pre] obvious. For example, Dickerson describes a method to generate electricity using flare gas (raw natural gas that is to be flared) at an oil and gas production facility. [EX1005, Abstract, [0002]]. [EX1003, 159].

Limitation [24a]

Dickerson describes a method to generate electricity using flare gas (raw natural gas that is to be flared) at an oil and gas production facility. [EX1005, Abstract, [0002]]. Dickerson discloses that the gas genset 102 includes a gas engine 110 and a generator 112 that is driven by the engine 110. [EX1005, [0026]]. Thus, Dickerson discloses [24a]. [EX1003, 160-161].

Limitation [24b]

As discussed above in Section IV.A.5, in the Dickerson-CryptoKube combination, the combined device would have (1) Dickerson's mobile power generation system; and (2) CryptoKube's mobile Bitcoin miner, wherein the Bitcoin mining devices (spondooliestech SP35 servers) are connected to and powered by Dickerson's generator. Thus, the Dickerson-CryptoKube combination discloses [24b]. [EX1003, 162-163].

Limitation [24c]

Dickerson discloses that the "gas genset 102 includes a gas engine 110 and a generator 112 that is driven by the engine 110." [EX1005, [0026]]. As shown in FIG. 1, the generator 112 is connected (via the gas conditioning system 100) to the source of combustible gas to receive a continuous flow of combustible gas to power the generator. [EX1003, 164].

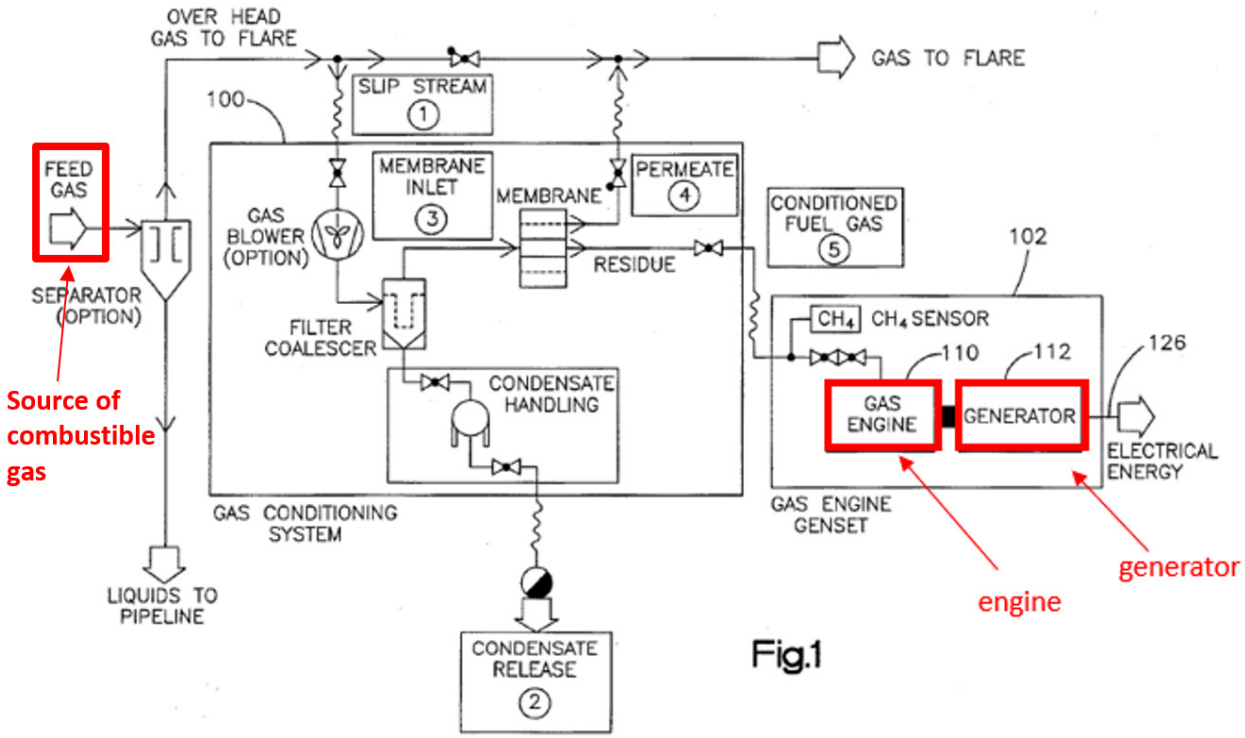

[EX1005, FIG. 1 (annotated)].

To the extent that Upstream argues the generator needs to be "directly" connected to the source of combustible gas, Dickerson also discloses that "the gas may be of sufficient quality to burn directly out of the well without any membrane treatment." [EX1005, [0039]]; [EX1003, 165].

Dickerson further discloses a continuous flow of combustible gas (e.g.,

natural gas) because it discloses that "[i]n an application where the facility operator contemplates times when raw natural gas flow will be interrupted, a stand-by diesel generator is provided." [EX1005, [0021]]; [EX1003, 166].

Thus, Dickerson discloses [24c]. [EX1003, 164-167].

Limitation [24d_i]

See [1c_i].

Limitation [24d_ii]

See [1c_ii].

Limitation [24d_iii]

See [1c_iii].

Limitation [24d_iv]

See [1c_iv].

Limitation [24d_v]

See [1c_v].

Limitation [24d_vi]

See [1c_vi].

Limitation [25.0]

Dickerson describes a mobile power generation system that can generate electricity using flare gas (raw natural gas that is to be burned) at an oil and gas production facility. [EX1005, Abstract, [0002]]. Dickerson discloses "delivering the apparatus to an oil or gas production facility, **connecting** and operating the

apparatus while the facility is generating raw natural gas, and disconnecting and removing the apparatus from the site when raw natural gas is no longer being generated." [EX1005, Abstract]. A POSITA would have understood that prior to using the source of combustible gas, the source of combustible gas needed to be disconnected or diverted from a combustible gas disposal device (a flare) to operate the Dickerson's system and to operate the blockchain mining devices in CryptoKube. [EX1003, 174].

Thus, Dickerson renders obvious [25.0]. [EX1003, 175].

Limitation [26.0]

Dickerson's system includes a gas disposal device in the form of a flare. [EX1005, [0028]]; [EX1003, 176]. FIG. 1 of Dickerson shows one setup of its combined gas conditioning and power generation system. [EX1005, [0008]]. As shown in FIG. 1, the inlet gas enters the filter coalescer which removes any liquid condensates/aerosols (#2) formed and the overhead gas next enters the membrane vessels, which split the inlet (#3) into two streams—the membranes preferentially permeate the heavy hydrocarbons, CO2, water and H2S, and the resulting permeate stream (#4) is flared. [EX1005, [0028]].

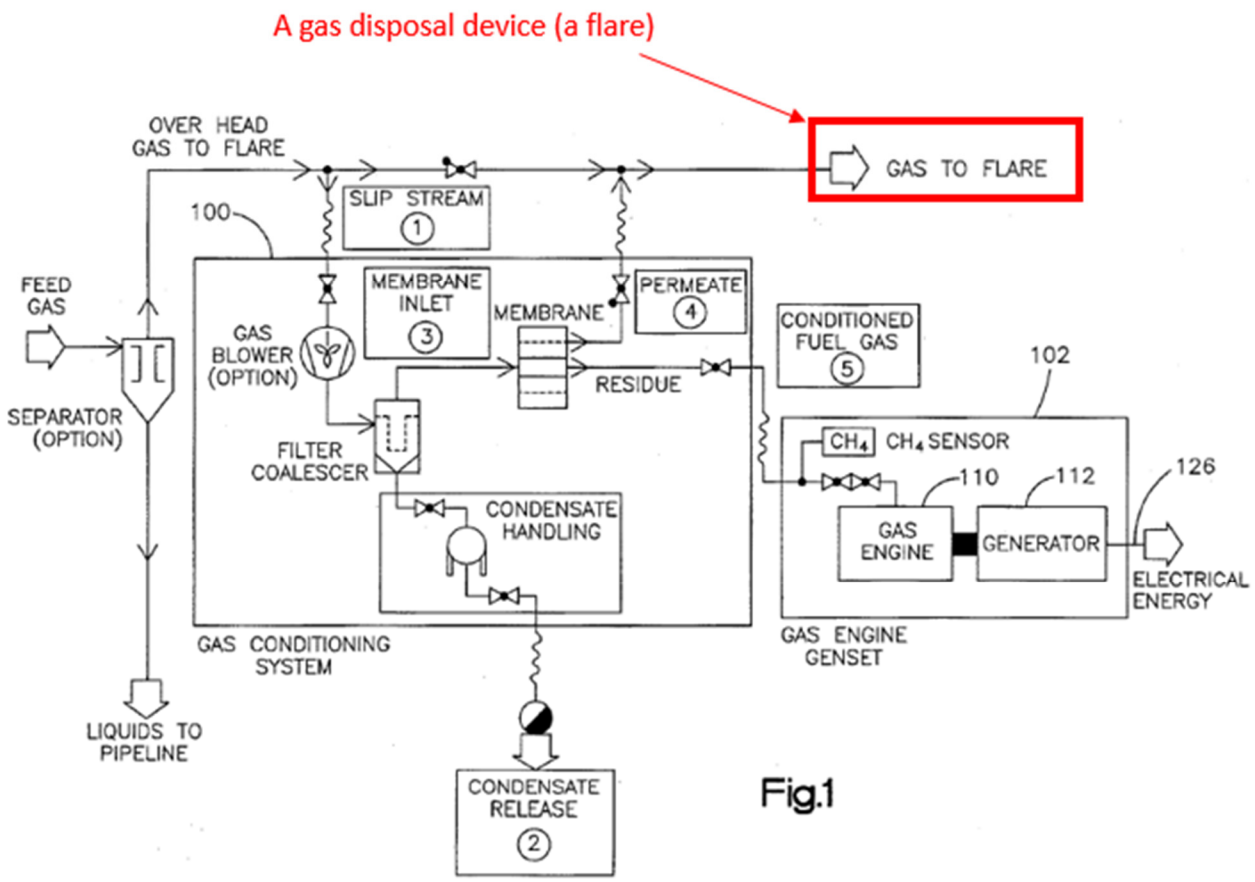

[EX1005, FIG. 1 (annotated)].

Thus, Dickerson discloses a gas disposal device in the form of a flare. [EX1003, 176-178].

Limitation [27.0]

FIG. 1 of Dickerson shows one setup of its combined gas conditioning and power generation system. [EX1005, [0008]]. As shown in FIG. 1, a valve is connected upstream of the generator, and can selectively supply the gas to flare either (1) to the flare, or (2) to the gas conditioning system 100 and the gas genset 102. [EX1003, 179].

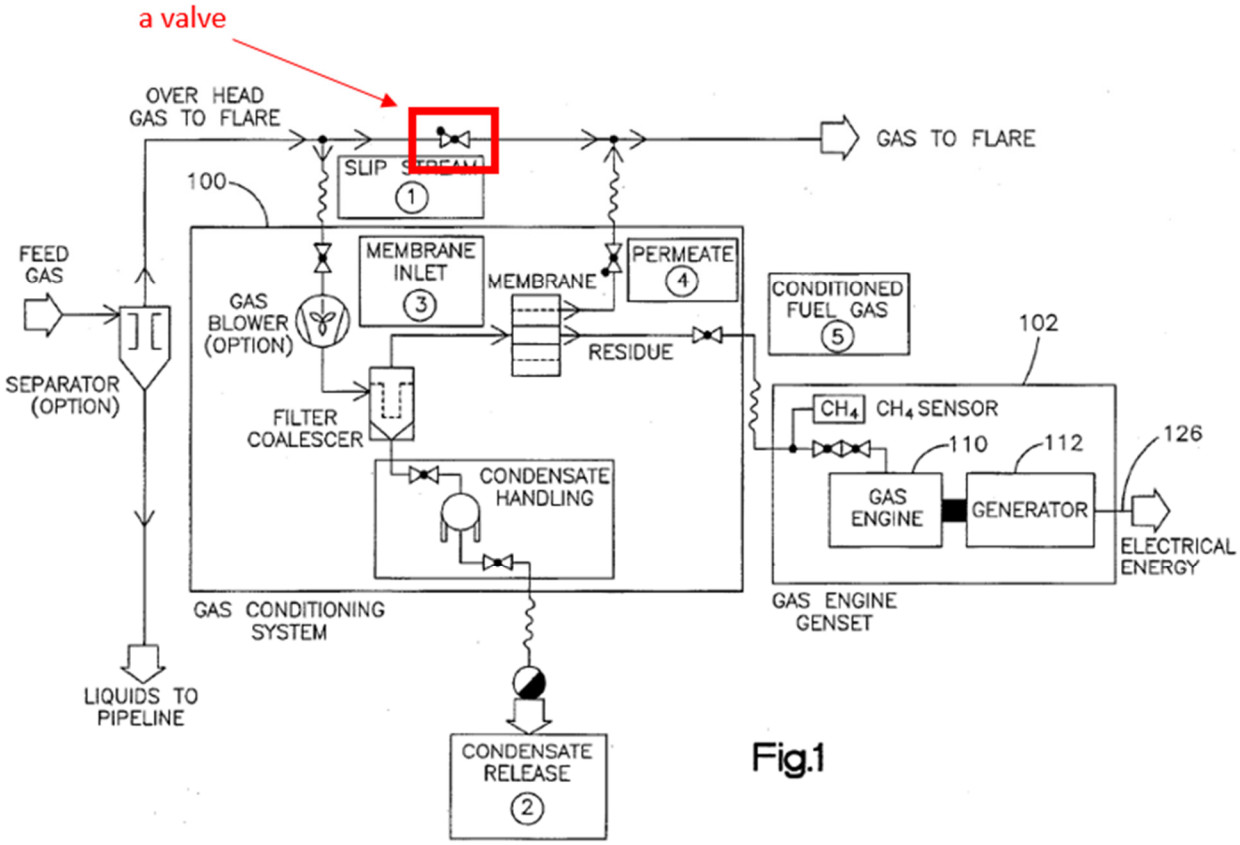

Fig.1

[EX1005, FIG. 1].

Thus, Dickerson discloses connecting the source of combustible gas to operate the blockchain mining devices; and diverting gas from a combustible gas disposal device (a flare) to operate the blockchain mining devices. [EX1003, 179-181].

Limitation [28.0]

See [2.0] above.

Limitation [29.0]

See [3.0] above.

Limitation [30.0]

See [4.0] above.

Limitation [34.0]

As discussed above regarding [24d_iii], the mining processors are connected to the network interface and adapted to mine transactions associated with the blockchain database and to communicate with the blockchain database. A POSITA would have found it obvious that the network interface connection could be a wireless connection. [EX1004, 163]. For example, Kheterpal discloses that "[n]odes 10 of network 100 may be coupled via any desired underlying communications technology such as **wired or wireless** network technologies." [EX1010, [0030]]. Thus, using a wireless network connection is an obvious design choice. [EX1004, 163-164].

B. GROUND 2 (Dickerson, CryptoKube, and Belady-989 in view of Szmigielski and Kheterpal)

1. Overview of Belady-989

Belady-989 describes a gas supply shock absorber (containing a gas storage) that is used to improve a data center system powered by a natural gas generator. [EX1011, Abstract]; [EX1003, 76-78]. If the shock absorber has sufficient gas, a co-located data center utilizes such gas for increased electrical power generation during increased processing activity, which can be requested or generated. [EX1011, Abstract]. Conversely, if the shock absorber has insufficient gas, and a negative pressure spike occurs, the data center throttles down or offloads

processing. [EX1011, Abstract]. FIG. 1 illustrates Belady-989's system. [EX1003, 77].

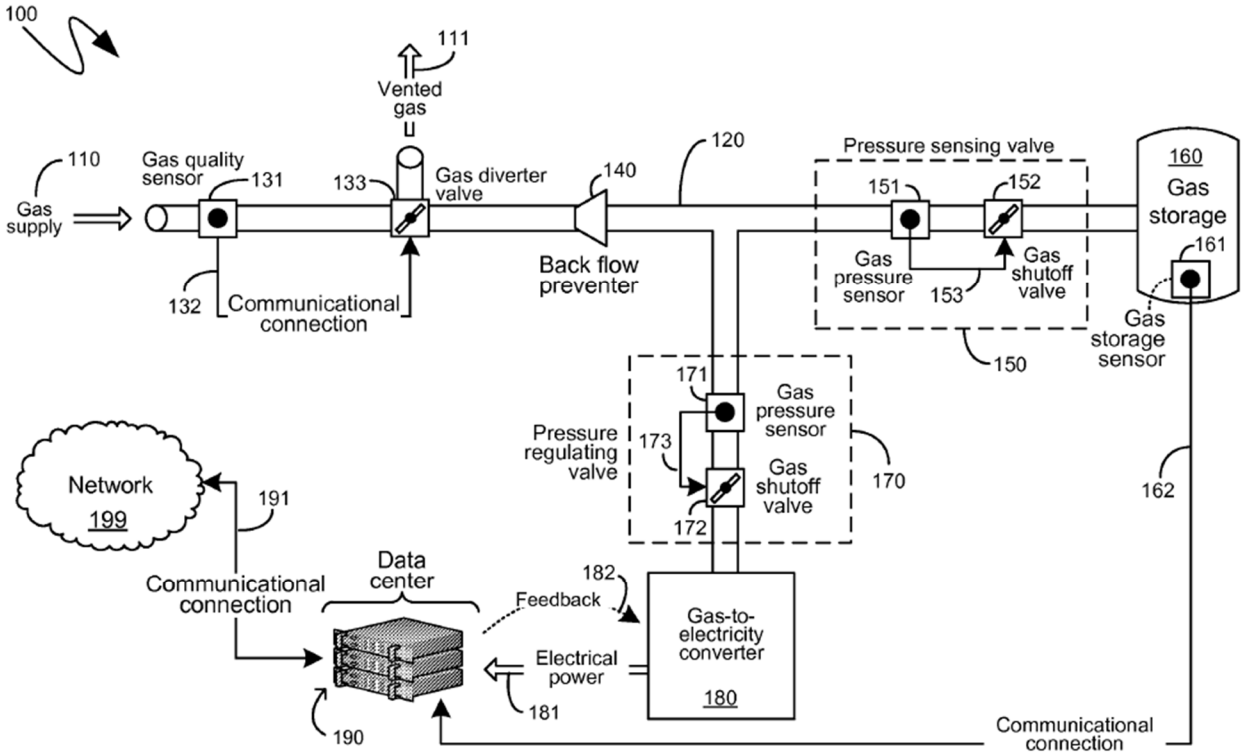

Figure 1

[EX1011, FIG. 1]

As shown in FIG. 1, the data center 190 is connected to network 199, and is powered by a gas-to-electricity converter 180, which can be a gas generator. [EX1011, [0019]]; [EX1003, 78]. Belady-989's data center system "can be located in an area where gas supply 110 can be plentiful or otherwise available at a minimal cost, but such a gas supply 110 can also experience pressure spikes." [EX1011, [0019]]. The gas supplied by the gas supply 110 can include natural gas,

biogas, methane, propane or other hydrocarbons, hydrogen, or any other fuel that can be accepted by gas-to-electricity converter 180, such as a generator. [EX1011, [0019]]; [EX1003, 78].

2. The combination of Dickerson, CryptoKube, and Belady-989

A POSITA would have been motivated to combine Dickerson, CryptoKube, and Belady-989. [EX1003, 187-195]; [EX1004, 166-174]. As discussed above, in the Dickerson-CryptoKube combination, the combined device would have (1) Dickerson's mobile power generation system; and (2) CryptoKube's mobile Bitcoin miner, wherein the Bitcoin mining devices (spondooliestech SP35 servers) are connected to and powered by Dickerson's generator. [EX1003, 191].

Belady-989 describes a gas supply shock absorber (containing a gas storage) that is used to improve a data center system powered by a natural gas generator. [EX1011, Abstract]; [EX1003, 192]. If the shock absorber has sufficient gas, a co-located data center utilizes such gas for increased electrical power generation during increased processing activity, which can be requested or generated. [EX1011, Abstract]. Conversely, if the shock absorber has insufficient gas, and a negative pressure spike occurs, the data center throttles down or offloads processing. [EX1011, Abstract].

Dickerson discloses that "auxiliary means for providing electricity is

provided when there will likely be periods when the production facility will require electricity but **will be generating no or low levels of raw natural gas**." [EX1005, [0021]]. A POSITA would have understood that the flow of raw natural gas from the oil and gas facility may fluctuate and would have been motivated to further improve the Dickerson-CryptoKube combination by employing Belady-989's gas supply shock absorber, among other reasons, because doing so will improve the energy usage efficiency. [EX1003, 193]. Indeed, Belady-989 discloses that data centers often consume large quantities of electrical power, and should be located in areas where natural resources (e.g., flare gas), from which electrical power can be derived, are abundant and can be obtained inexpensively. [EX1003, 193]; [EX1011, [0004]]. Szmigielski also discloses that "[i]ndustrial miners face almost the same issues as data centers: access to relatively cheap power, good network access…" [EX1009, 103]. Thus, a POSITA would have been motivated to combine Dickerson, CryptoKube and Belady-989, to use Belady-989's gas supply shock absorber to improve energy usage efficiency. [EX1003, 193-194].

In the Dickerson-CryptoKube-Belady-989 combination, the combined device would have (1) Dickerson's mobile power generation system; (2) CryptoKube's mobile Bitcoin miner, wherein the Bitcoin mining devices (spondooliestech SP35 servers) are connected to and powered by Dickerson's generator; and (3) Belady-989's gas supply shock absorber. [EX1003, 195].

3. Analysis

Limitation [1pre]

See Ground 1.

Limitation [1a]

See Ground 1.

Belady-989 further discloses data centers often consume large quantities of electrical power, and should be located in areas where natural resources (e.g., flare gas), from which electrical power can be derived, are abundant and can be obtained inexpensively. [EX1011, [0004]]. Belady-989 further discloses that gas supply 110 can be from gas produced as a waste product of oil drilling. [EX1011, [0028]]; [EX1003, 198-200].

Limitation [1b]

See Ground 1.

Belady-989 further discloses that gas-to-electricity converter 180 can be a generator. [EX1011, [0019]]; [EX1003, 201-203].

Limitation [1c]

See Ground 1.

Limitation [1c_i]

See Ground 1.

Further, Belady-989 discloses that "the data center 190 can comprise a communication connection 191 to a network 199." [EX1011, [0029]]; [EX1003,

205-206].

Limitation [1c_ii]

See Ground 1.

Limitation [1c_iii]

See Ground 1.

Limitation [1c_iv]

See Ground 1.

Limitation [1c_v]

See Ground 1.

Limitation [1c_vi]

See Ground 1.

Limitation [2.0]

See Ground 1.

Belady-989 further discloses that data centers often consume large quantities of electrical power, and should be located in areas where natural resources (e.g., flare gas), from which electrical power can be derived, are abundant and can be obtained inexpensively. [EX1011, [0004]]. Specifically, Belady-989 explains that "natural gas is a byproduct of oil drilling operations and is often considered a waste byproduct since it cannot be economically captured and brought to market." *Id*. Belady-989 further discloses that gas supply 110 can be from gas produced as a waste product of oil drilling. [EX1011, [0028]]; [EX1003, 202-204].

Limitation [3.0]

See Ground 1.

Belady-989 further discloses that it has become more practical to perform digital data processing at a location **remote** from the location where such data is initially generated, and where the processed data will be consumed. [EX1011, [0002]]; [EX1003, 215-217].

Limitation [4.0]

See Ground 1.

Limitation [8.0]

See Ground 1.

Limitation [10.0]

As discussed above, in the Dickerson-CryptoKube-Belady-989 combination, the combined device would have (1) Dickerson's mobile power generation system; (2) CryptoKube's mobile Bitcoin miner, wherein the Bitcoin mining devices (spondooliestech SP35 servers) are connected to and powered by Dickerson's generator; and (3) Belady-989's gas supply shock absorber. [EX1003, 220].

Belady-989 describes a gas supply shock absorber (containing a gas storage) that is used to improve a data center system powered by a natural gas generator. [EX1011, Abstract]. If the shock absorber has sufficient gas, a co-located data center utilizes such gas for increased electrical power generation during increased

processing activity, which can be requested or generated. [EX1011, Abstract]. Conversely, if the shock absorber has insufficient gas, and a negative pressure spike occurs, the data center throttles down or offloads processing. [EX1011, Abstract]. CryptoKube discloses a monitoring server running Data Center Infrastructure Management ("DCIM") software that can be customized to monitor and control the individual miners. [EX1023, 0:00:08]; [EX1003, 221]. A POSITA would have been found it obvious to adapt CryptoKube's DCIM software to adjust the mining activity of the mining processors (e.g., by turning off a certain number of mining processors) based on input from Belady-989's tank pressure sensor. [EX1003, 221]; [EX1004, 192].

Thus, in the Dickerson-CryptoKube-Belady-989 combination, the system is configured to modulate a power load level exerted by the blockchain mining devices on the generator, by increasing or decreasing the mining activity of the mining processor. [EX1003, 220-223]; [EX1004, 191-194].

Limitation [11.0]

As discussed above for [10.0], a POSITA would have found it obvious to adapt CryptoKube's DCIM software to regulate the mining activity of the mining processors (e.g., by turning off a certain number of mining processors) based on input from Belady-989's tank pressure sensor. [EX1003, 224]; [EX1004, 195]. For example, a POSITA would have found it obvious to adjust the mining activity of

the mining processors by increasing or decreasing a maximum number of mining processors that are engaged in mining transactions. [EX1003, 224]; [EX1004, 195].

Thus, Belady-989 renders obvious [11.0]. [EX1003, 224-225]; [EX1004, 195-196].

Limitation [12.0]

As discussed above for [10.0], a POSITA would have found it obvious to adapt CryptoKube's DCIM software to adjust the mining activity of the mining processors (e.g., by turning off a certain number of mining processors) based on input from Belady-989's tank pressure sensor. [EX1003, 226]; [EX1004, 197].

Belady-989 discloses that its gas supply shock absorber comprises **pressure sensing valves and pressure regulating valves**, which can detect positive pressure spikes in the gas supply and enable such overly pressurized gas to charge the gas storage, and which can also detect negative pressure spikes in the gas supply and, in response, make available the gas stored in the gas storage to compensate for such negative pressure spikes. [EX1011, [0015]]. Belady-989 further discloses that **if the gas storage has a sufficient quantity of gas** stored therein, the data center can utilize such gas to provide increased electrical power during periods of increased processing activity and workload. [EX1011, [0015]]. Conversely, **if the gas storage has an insufficient quantity of gas** stored therein,

and the gas supply experiences a negative pressure spike, the computing devices of the data center can be throttled down to consume less electrical power. [EX1011, [0015]]. A POSITA would have found it obvious that Belady-989's gas pressure sensor regulates the power load level of the digital currency miners (e.g., by turning off a certain number of mining processors) based on input from Belady-989's tank pressure sensor in response to variations in a production rate of combustible gas. [EX1003, 227]; [EX1004, 198].

Thus, in the Dickerson-CryptoKube-Belady-989 combination, the system is configured to modulate the power load level in response to variations in a production rate of combustible gas from the hydrocarbon production well, storage, or processing facility. [EX1003, 226-229]; [EX1004, 197-200].

Limitation [15.0]

As discussed above for [10.0], a POSITA would have found it obvious to adapt CryptoKube's DCIM software to adjust the mining activity of the mining processors (e.g., by turning off a certain number of mining processors) based on input from Belady-989's tank pressure sensor. [EX1003, 230]; [EX1004, 201].

Further, Belady-989 discloses that "**positive gas pressure spikes** can occur with an average frequency such as, for example, occurring, on average, once every couple of hours or once every couple of days" [EX1011 [0036]]. This corresponds to the available fuel spikes in FIG. 5A in the '372 patent. [EX1003, 231].

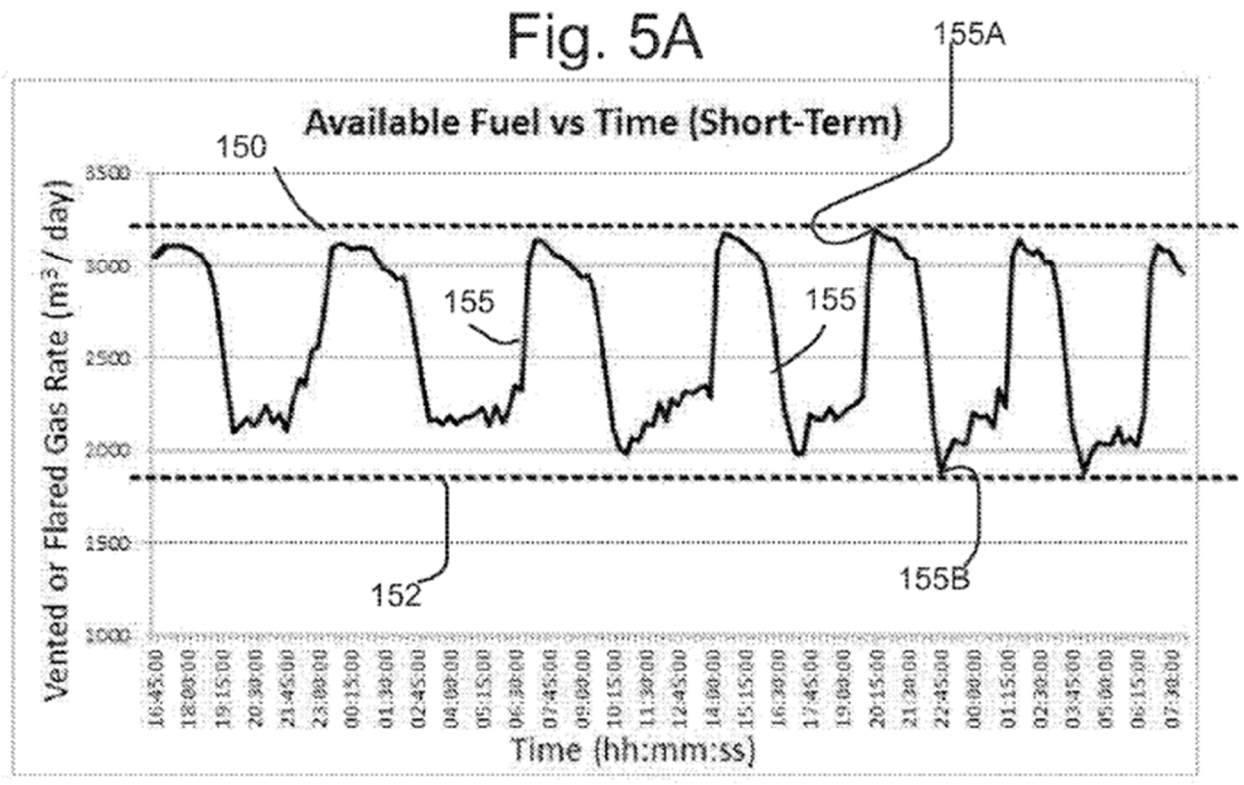

[’372 patent, FIG. 5A].

Thus, Belady-989 discloses that, in the Dickerson-CryptoKube-Belady-989 combination, a production rate (positive gas pressure) of combustible gas from the hydrocarbon production well, storage, or processing facility **varies between a daily minimum production rate and a daily maximum production rate**. [EX1003, 232].

Belady-989 further discloses that such historical data (of positive gas pressure spikes) can be taken into account to control the power load level of the data center. [EX1011, [0036]]. For example, if there is no anticipated positive gas pressure spike, one or more individual processing units can be throttled down, to

reduce the overall energy consumption of the data center. [EX1011, [0036]]. When there are anticipated positive gas pressure spikes, a POSITA would have found it obvious to limit the power load level to above a power level producible by the generator when the production rate is at the daily minimum production rate, to fully make use of the generated electricity. [EX1003, 233].

Belady-989 discloses a backup source of fuel in the form of gas storage 160. [EX1003, 224]. Specifically, Belady-989 discloses that "[**s]hould the gas supply 110 subsequently experience a negative gas pressure spike**, such that the pressure of the gas supplied by the gas supply 110 decreases, in one embodiment, the gas pressure sensor 151 of the pressure sensing valve 150 can detect such a decrease in the gas pressure and can cause the gas shutoff valve 152 to open to enable gas from the gas storage 160 to flow into the piping 120, thereby increasing the gas pressure in the piping 120 and **providing the gas-to-electricity converter 180 with a sufficient pressure to continue to provide sufficient electrical power 181 to the data center**." [EX1011, [0025]].

Thus, Belady-989 discloses a backup source is connected make up a shortfall in fuel required to supply the blockchain mining devices with the power load level. [EX1003, 230-236].

Limitation [16.0]

See Ground 1.

Limitation [17.0]

See Ground 1.

Limitation [18.0]

See Ground 1.

Limitation [19.0]

See Ground 1.

Limitation [20.0]

See Ground 1.

Limitation [21.0]

See Ground 1.

Limitation [22.0]

See Ground 1.

Belady-989 further discloses that the gas diverter valve 133 can be triggered and the gas provided by the gas supply 110 can be vented as vented gas 111. [EX1011, FIG. 1, [0028]]; [EX1003, 243-245].

Limitation [23.0]

See Ground 1.

Belady-989 further discloses that the gas diverter valve 133 can be triggered and the gas provided by the gas supply 110 can be vented as vented gas 111. [EX1011, FIG. 1, [0028]]; [EX1003, 246-248].

Limitation [24pre]

See Ground 1.

Limitation [24a]

See Ground 1.

Belady-989 further discloses that data centers often consume large quantities of electrical power, and should be located in areas where natural resources (e.g., flare gas), from which electrical power can be derived, are abundant and can be obtained inexpensively. [EX1011, [0004]]. Belady-989 further discloses that gas-to-electricity converter 180 can be a generator. [EX1011, [0019]]. Belady-989 further discloses that gas supply 110 can be from gas produced as a waste product of oil drilling. [EX1011, [0028]]; [EX1003, 250-252].

Limitation [24b]

See Ground 1.

Limitation [24c]

See Ground 1.

Limitation [24d_i]

See Ground 1.

Further, Belady-989 discloses that "the data center 190 can comprise a communication connection 191 to a network 199." [EX1011, [0029]]; [EX1003, 255-256].

Limitation [24d_ii]

See Ground 1.

Limitation [24d_iii]

See Ground 1.

Limitation [24d_iv]

See Ground 1.

Limitation [24d_v]

See Ground 1.

Limitation [24d_vi]

See Ground 1.

Limitation [25.0]

See Ground 1.

Limitation [26.0]

See Ground 1.

Belady-989 further discloses that the gas diverter valve 133 can be triggered and the gas provided by the gas supply 110 can be vented as vented gas 111. [EX1011, FIG. 1, [0028]]; [EX1003, 263-265].

Limitation [27.0]

See Ground 1.

Belady-989 further discloses that the gas diverter valve 133 can be triggered and the gas provided by the gas supply 110 can be vented as vented gas 111. [EX1011, FIG. 1, [0028]]; [EX1003, 266-268].

Limitation [28.0]

See Ground 1.

Belady-989 further discloses data centers often consume large quantities of electrical power, and should be located in areas where natural resources (e.g., flare gas), from which electrical power can be derived, are abundant and can be obtained inexpensively. [EX1011, [0004]]. Specifically, Belady-989 explains that "natural gas is a byproduct of oil drilling operations and is often considered a waste byproduct since it cannot be economically captured and brought to market." *Id*. Belady-989 further discloses that gas supply 110 can be from gas produced as a waste product of oil drilling. [EX1011, [0028]]; [EX1003, 269-271].

Limitation [29.0]

See Ground 1.

Belady-989 further discloses that it has become more practical to perform digital data processing at a location **remote** from the location where such data is initially generated, and where the processed data will be consumed. [EX1011, [0002]]; [EX1003, 272-274].

Limitation [30.0]

See Ground 1.

Limitation [34.0]

See Ground 1.

Limitation [35.0]

See [10.0].

Limitation [36.0]

See [11.0].

Limitation [37.0]

See [12.0].

Limitation [40.0]

See [15.0].

C. GROUND 3 (Dickerson, CryptoKube, Belady-989, and Boot in view of Szmigielski and Kheterpal)

1. Overview of Boot

U.S. Patent No. 9,394,770 ("Boot") describes a mobile power generation system that can generate electricity using flare gas (raw natural gas that is to be flared) at an oil and gas production facility that is isolated from a power grid. [EX1012, Abstract, 1:5-10, 4:6-7]; [EX1003, 79-83]. Boot explains that "[t]he driver is preferably an engine that is provided with combustible gases from the petroleum products of the well" and "[i]n the past, such gas have often been vented or flared at the well 118." [EX1012, 1:55-57, 4:6-7].

As shown in FIG. 1, Boot's system includes a genset 102, a fuel source 104, an integrated control system 106, a load bank 110, and one or more loads 108. [EX1012, 2:23-28]. The genset 102 includes a driver (engine) 112 coupled to a

generator 114. [EX1012: 29-35]. The loads 108 are general references for devices or systems that consume electrical power (e.g., electric motors, computers). [EX1012, 35-41].

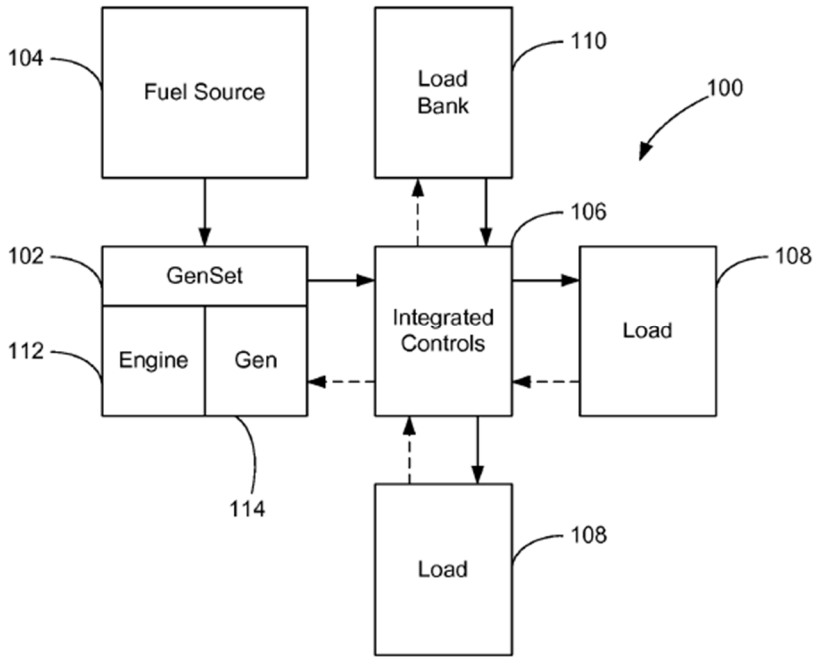

[EX1012, FIG. 1].

Boot explains that the load bank 110 can be activated to take-up any excess power to maintain a minimum load to keep the engine 112 within its preferred operating parameters. [EX1012, 3:8-14]. Boot's system can be positioned on a common platform or skid 130, which is configured to be rolled on and off a conventional lowboy trailer. [EX1012, 4:27-37].

In FIG. 2, Boot further discloses that the flare gas can be derived from more than one well heads (well 118). [EX1012, FIG. 2, 3:42-46]; [EX1003, 83]. Boot

further discloses that the electric submersible pumping system 116 pushes pumped fluids out of the well 118 to surface facilities 120 (e.g., phase separators, storage batteries and gathering lines), which output the flare gas to the genset 102 to generate electricity. [EX1012, 3:37-42]; [EX1003, 83].

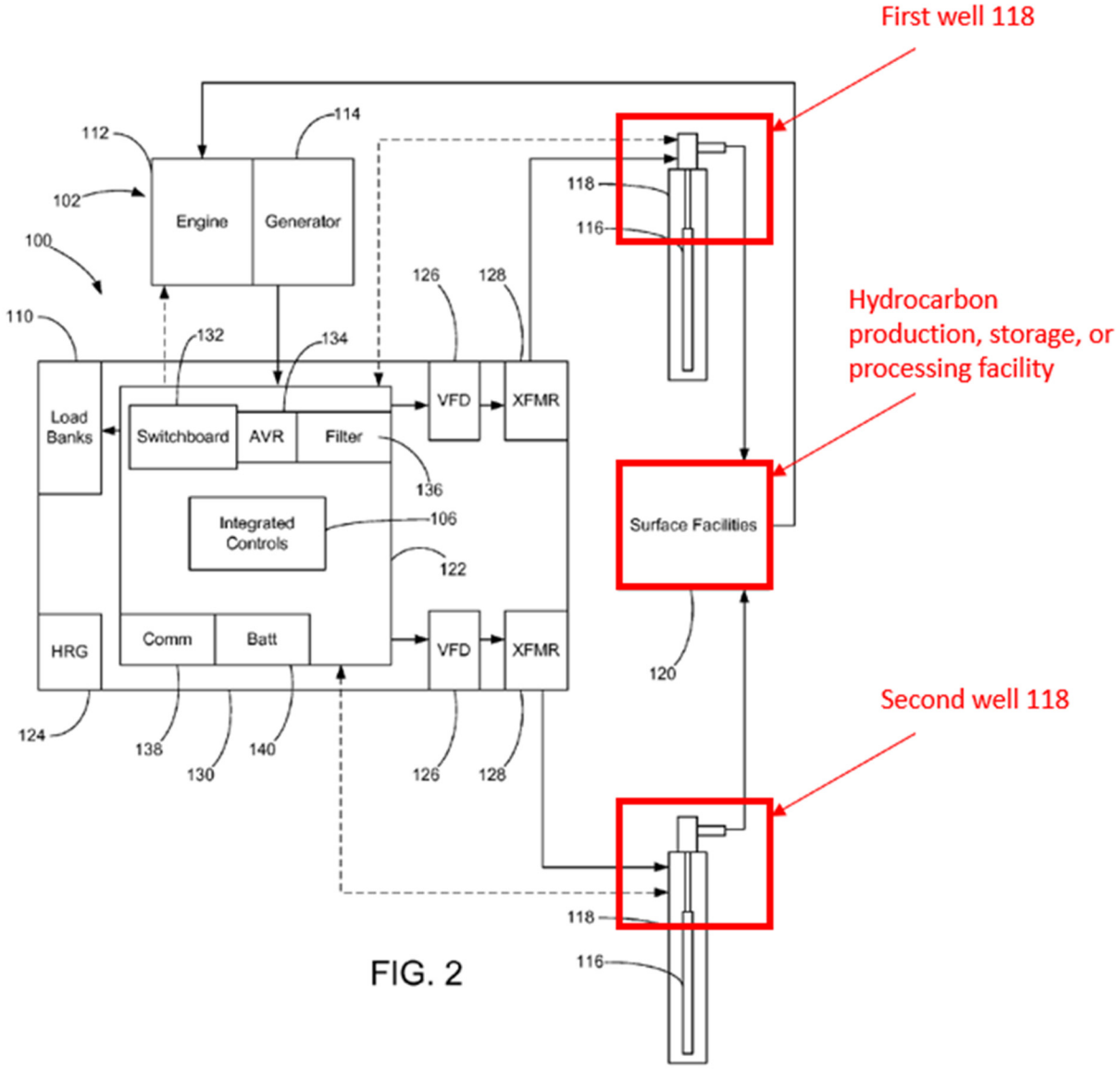

FIG. 2

[EX1012, FIG. 2 (annotated)].

2. The combination of Dickerson, CryptoKube, Belady-989, and Boot

A POSITA would have been motivated to combine Dickerson, CryptoKube, Belady-989, and Boot. [EX1003, 282-286]; [EX1004, 234-238]. Similar to Dickerson, Boot discloses a mobile power generation system that can generate electricity using flare gas (raw natural gas that is to be flared) at an oil and gas production facility that is isolated from a power grid. [EX1012, Abstract, 1:5-10, 4:6-7]. Boot discloses that the power generated may be more than the power required on an oil field pumping site, and that the excess power can be dissipated as heat in a load bank 110. [EX1012, 3:8-14]. Boot further discloses in FIG. 2 that the flare gas can be derived from more than one oil pumps or more than one well heads. [EX1012, FIG. 2, 3:42-46]; [EX1003, 283].

A POSITA would have found it obvious to improve the Dickerson-CryptoKube-Belady-989 combination by further including Boot's teachings including using Boot's load bank to absorb excess power, and gathering oil and gas from multiple wells on a multi-well pad. [EX1003, 284]; [EX1004, 236]. A POSITA would have been motivated to include Boot's load bank because Boot teaches that the load bank can help keep the engine within its preferred operating parameters (for instance not running at too low a speed and hence too low a temperature). [EX1003, 285]; [EX1004, 237]; [EX1012, 3:8-14]. A POSITA

would have been motivated to gather oil and gas from multiple wells on a multi-well pad because doing so can increase gas supply and increase the amount of electricity generated. [EX1003, 286]; [EX1004, 238].

3. Analysis

Limitation [1pre]

To the extent the preamble is limiting, the Dickerson-CryptoKube-Belady-989-Boot combination renders [1pre] obvious. [EX1003, 288]. For example, Boot describes a mobile power generation system that can generate electricity using flare gas (raw natural gas that is to be flared) at an oil and gas production facility. [EX1012, Abstract, 1:5-10, 4:6-7]. CryptoKube also discloses a Bitcoin miner system. [EX1006, 1-4].

Limitation [1a]

As shown in FIG. 2, Boot discloses that the electric submersible pumping system 116 pushes pumped fluids out of the well 118 to surface facilities 120 (e.g., phase separators, storage batteries and gathering lines). [EX1012, 3:37-42]. Boot discloses that the engine 112 operates on methane, ethane or other gases produced in the surface facilities 120 (e.g., phase separators), scavenged from the well 118. [EX1012, 3:62-4:2]. Boot explains that its system "will find particular utility in providing power to electric submersible pumping systems disposed in wells drilled in remote locations for the production of petroleum products." [EX1012, 3:25-31].

A POSITA would have understood that Boot's system discloses a source of combustible gas produced from a hydrocarbon production, storage, or processing facility in the form of surface facilities 120. [EX1003, 289].

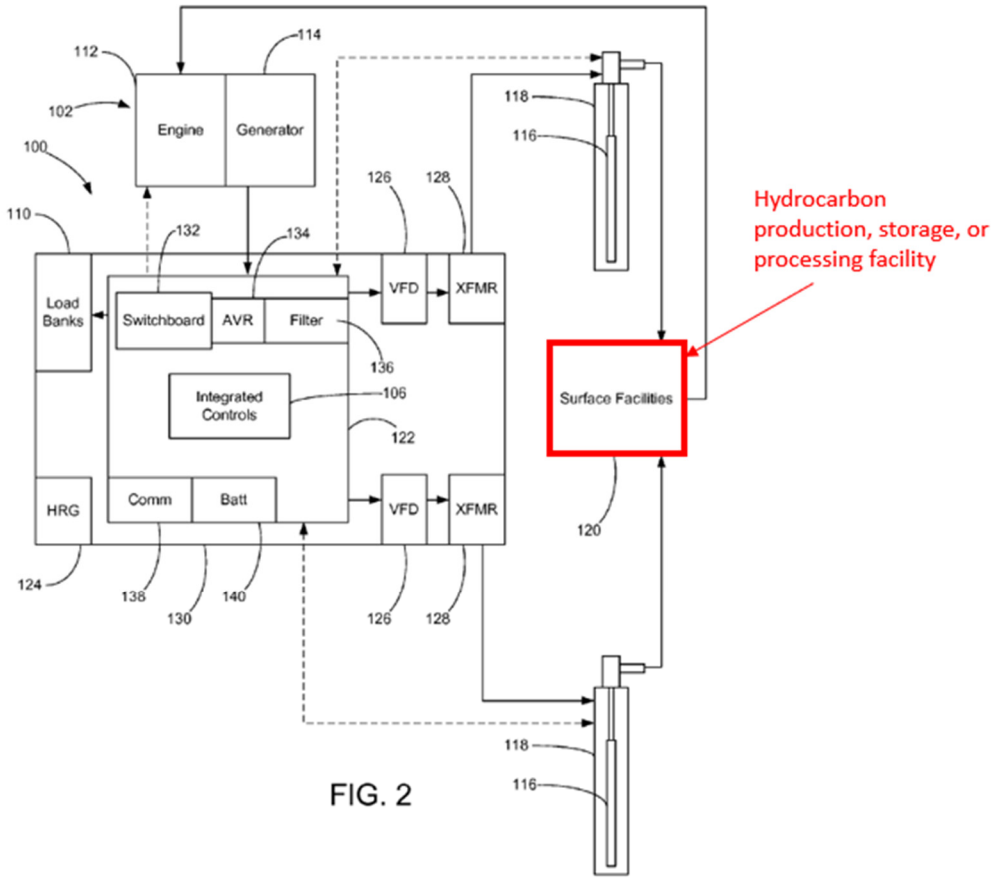

[EX1012, FIG. 2 (annotated)].

Limitation [1b]

Boot discloses that the genset 102 includes a driver (engine) 112 coupled to a generator 114. [EX1012, 2: 29-30]. As discussed above, Boot further discloses that the engine 112 operates on methane, ethane or other gases produced in the surface facilities 120 (e.g., phase separators), scavenged from the well 118.

[EX1012, 3:62-4:2].

Boot further discloses adjusting the output of the generator to accommodate the demand of the electrical loads. [EX1012, 3:4-7, 5:36-42, claim 1]. A POSITA would have found this requires a continuous flow of combustible gas to power the generator. [EX1003, 291-293].

Limitation [1c]

See Ground 2 above.

Limitation [1c_i]

See Ground 2 above.

Limitation [1c_ii]

See Ground 2 above.

Limitation [1c_iii]

See Ground 2 above.

Limitation [1c_iv]

See Ground 2 above.

Limitation [1c_v]

See Ground 2 above.

Limitation [1c_vi]

See Ground 2 above.

Limitation [2.0]

Boot discloses that its system is adapted for providing power to electric

submersible pumping systems and associated auxiliary systems installed in locations without access to an established power grid. [EX1012, 1:5-10]. Boot further discloses that "[t]he driver is preferably an engine that is provided with combustible gases from the petroleum products of the well" and "[i]n the past, such gas have often been vented or flared at the well 118." [EX1012, 1:55-57, 4:6-7]; [EX1003, 301-303].

Limitation [3.0]

Boot describes a mobile power generation system that can generate electricity using flare gas (raw natural gas that is to be flared) at an oil and gas production facility that is isolated from a power grid. [EX1012, Abstract, 1:5-10, 4:6-7]. Boot explains that its system "will find particular utility in providing power to electric submersible pumping systems disposed in wells drilled in remote locations for the production of petroleum products." [EX1012, 3:25-31]; [EX1003, 304].

Boot further discloses adjusting the output of the generator to accommodate the demand of the electrical loads. [EX1012, 3:4-7, 5:36-42, claim 1]. A POSITA would have found this requires a continuous flow of combustible gas to power the generator. [EX1003, 304-306].

Limitation [4.0]

Boot discloses that the genset 102 includes a driver (engine) 112 coupled to

a generator 114, where the engine produces mechanical power to drive the generator. [EX1012, 2: 29-35]. As discussed above, Boot further discloses that the engine 112 operates on methane, ethane or other gases produced in the surface facilities 120 (e.g., phase separators), scavenged from the well 118. [EX1012, 3:62-4:2]. Boot explains that "[t]hrough use of emission catalysts within the engine 112, the exhaust gases generated by **combustion within the engine 112** present a significant environmental benefit." [EX1012, 4:8-11]. Thus, Boot discloses a combustion engine (engine 112) connected to the source of combustible gas (surface facilities 120) and connected to drive the generator (generator 114). [EX1003, 307-308].

Limitation [7.0]

As shown in FIG. 2, Boot discloses that the electric submersible pumping system 116 pushes pumped fluids out of the well 118 to surface facilities 120 (e.g., phase separators, storage batteries and gathering lines). [EX1012, 3:37-42]; [EX1003, 309]. Boot discloses that the engine 112 operates on methane, ethane or other gases produced in the surface facilities 120 (e.g., phase separators), scavenged from the well 118. [EX1012, 3:62-4:2]. Thus, a POSITA would have understood that Boot's facility comprises an oil processing unit (surface facilities 120); the source of combustible gas comprises the unit, which has a gas outlet connected to supply combustible gas to operate the generator (generator 114); and

the unit is connected to receive oil produced from a remote oil well (well 118).

[EX1003, 309-310].

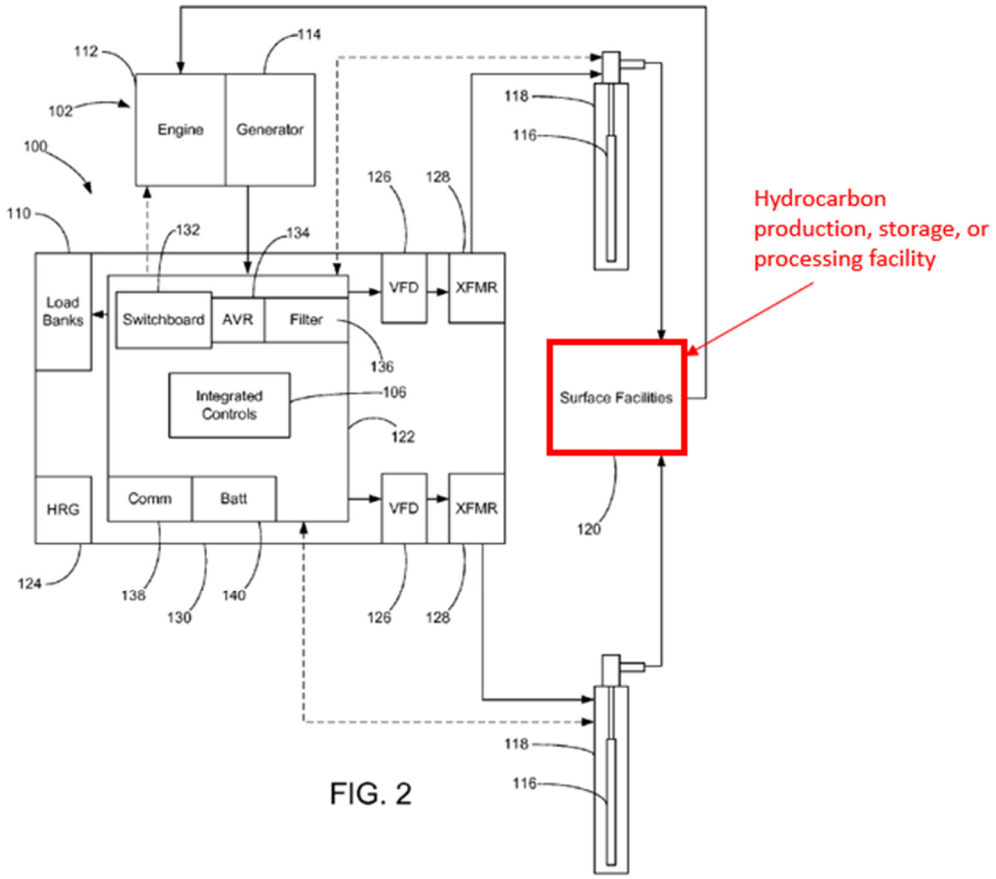

FIG. 2

[EX1012, FIG. 2 (annotated)].

Limitation [8.0]

See Ground 2 above.

Limitation [9.0]

Boot discloses that "[a]lthough two electric submersible pumping system 116 are depicted in FIG. 2, it will be appreciated that **fewer or greater numbers of electric submersible pumping systems 116** may be connected to a single

independent power system 100." [EX1012, 3:42-46]. A POSITA would have understood that Boot's system comprises a plurality of remote oil wells, which can be located on a multi-well pad. [EX1003, 312-313].

Limitation [10.0]

See Ground 2 above.

Limitation [11.0]

See Ground 2 above.

Limitation [12.0]

See Ground 2 above.

Limitation [15.0]

See Ground 2 above.

Limitation [16.0]

See Ground 2 above.

Limitation [17.0]

See Ground 2 above.

Limitation [18.0]

See Ground 2 above.

Limitation [19.0]

Boot discloses that the engine 112 can be a turbine engine, which can be from General Electric Company and can be configured to operate on a variety of fuels. [EX1012, 4:22-26]; [EX1003, 321-322].

Limitation [20.0]

See Ground 2 above.

Limitation [21.0]

See Ground 2 above.

Limitation [22.0]

See Ground 2 above.

Limitation [23.0]

See Ground 2 above.

Limitation [24pre]

See Ground 2 above.

Limitation [24a]

Boot describes a method to generate electricity using flare gas (raw natural gas that is to be burned) at an oil and gas production facility. [EX1012, Abstract, 1:5-10, 4:6-7, claim 1]; [EX1003, 328-329].

Limitation [24b]

See Ground 2 above.

Limitation [24c]

Boot discloses that the genset 102 includes a driver (engine) 112 coupled to a generator 114. [EX1012, 2: 29-30]. Boot further discloses that the engine 112 operates on methane, ethane or other gases produced in the surface facilities 120 (e.g., phase separators), scavenged from the well 118. [EX1012, 3:62-4:2]. Boot

further discloses adjusting the output of the generator to accommodate the demand of the electrical loads. [EX1012, 3:4-7, 5:36-42, claim 1]. A POSITA would have understood that this requires a continuous flow of combustible gas to power the generator. [EX1003, 331-333].

Limitation [24d_i]

See Ground 2 above.

Limitation [24d_ii]

See Ground 2 above.

Limitation [24d_iii]

See Ground 2 above.

Limitation [24d_iv]

See Ground 2 above.

Limitation [24d_v]

See Ground 2 above.

Limitation [24d_vi]

See Ground 2 above.

Limitation [25.0]

See Ground 2 above.

Limitation [26.0]

See Ground 2 above.

Limitation [27.0]

See Ground 2 above.

Limitation [28.0]

See [2.0] above.

Limitation [29.0]

See [3.0] above.

Limitation [30.0]

See [4.0] above.

Limitation [34.0]

See Ground 2 above.

Limitation [35.0]

See [10.0] above.

Limitation [36.0]

See [11.0] above.

Limitation [37.0]

See [12.0] above.

Limitation [40.0]

See [15.0] above.

D. GROUND 4 (MAGS + Polivka miner)

1. Overview of Pioneer Energy's MAGS system

Pioneer Energy's Mobile Alkane Gas Separator (MAGS) system ("MAGS" for short) separates **flare gases** that naturally occur at drilling sites into three

streams: one can be captured in tanks and shipped off for sale, another **powers generators** that run the drilling operation, and a third powers MAGS itself. [EX1013, 2]; [EX1003, 84-85]. Pioneer sold its first MAGS unit in late 2014 to a company operating in North Dakota, where flare gases were most often simply burned onsite, the gases wasted. [EX1013, 2].

[EX1013, 2].

Some of the engineering details of MAGS are described in US Patent Publication No. 2015/0368566 ("Young"). [EX1014, Abstract, [0059]]; [EX1003, 85]. For example, as described in Young, the ethane-enriched B-gas is combusted in an internal engine 719a and the mechanical shaft power is transmitted to a 480 VAC internal generator 719b. [EX1014, [0198]]. Young also discloses that MAGS

is containerized to fit on a trailer to confer better mobility. [EX1014, [0162], FIG. 4]; [EX1003, 85].

2. Overview of the Polivka miner

The Polivka miner ("Polivka" for short) is a mobile crypto-currency miner. [EX1003, 86-89]; [EX1004, 84-87]. Polivka is described in a Bitcointalk forum post thread that was kept in a May 11, 2015, WayBackMachine snapshot ("the Bitcointalk forum post"). [EX1015]; [EX1004, 84]. Polivka is also depicted in a Youtube video dated February 9, 2015 ("Polivka video"). [EX1019]; [EX1004, 84].

Polivka is adapted from a standard intermodal shipping container, and can be easily transported to remote well sites. [EX1015, 1-10]; [EX1019, 0:00:08]; [EX1004, 85]. The container can be loaded and unloaded without crane using the pictured pillars and an air-suspended truck only (Almost all of the trucks in Europe have air suspension). [EX1015, 10].

[EX1015, 1]

As shown in the below figure, Polivka contains a cooling fan, multiple digital currency miners on a rack, and a power distribution box on the left side. [EX1004, 86].

[EX1015, 31].

Polivka can carry various miners including Spondoolies-Tech SP31 and Bitmain Antminer S19. [EX1015, 17]. Cheap electricity is desired and required. [EX1015, 15, 21]; [EX1004, 87]. Polivka can be powered by gas using a combustion engine. [EX1015, 18]; [EX1004, 87].

3. The combination of MAGS and Polivka

A POSITA would have been motivated to combine MAGS and Polivka. [EX1003, 353-361]; [EX1004, 291-299]. MAGS separates **flare gases** that

naturally occur at drilling sites into three streams: one can be captured in tanks and shipped off for sale, another **powers generators** that run the drilling operation, and a third powers MAGS itself. [EX1013, 2]. Thus a POSITA would have understood that MAGS can produce cheap or free electricity using flare gases that would be otherwise flared at the well site. [EX1003, 353-355]; [EX1004, 291-293].

Smigielski discloses that one of the biggest costs for digital currency miners is the cost of electricity and access to cheap power is desired. [EX1009, 90]. Cheap electricity is desired and sometimes even required to run a digital currency miner. [EX1015, 15, 21]. Thus, a POSITA would have been motivated to couple a digital currency miner to MAGS to utilize the cheap or free electricity generated from flare gas. [EX1003, 356-357]; [EX1004, 294-295]. Polivka discloses a mobile Bitcoin miner that can be easily transported to a remote oil and gas production facility. [EX1015, 1-10]. Polivka can be powered by gas using a combustion engine. [EX1015, 18]. Thus, a POSITA would have found it obvious to couple the Polivka system with MAGS to utilize the cheap/free electricity. [EX1003, 358-359]; [EX1004, 296-297].

Both MAGS and the Polivka system are containerized to confer better mobility. [EX1014, [0162], FIG. 4]; [EX1015, 1-10]. Thus, it would have been easy to combine the two by (1) connecting the two systems, or (2) placing the respective equipment of the two systems into a single container. [EX1003, 360]. A

POSITA would have had a reasonable expectation of success in the combination at least because "the first MAGS field unit was tested in the spring of 2014 and units were sent to North Dakota later that fall." [EX1003, 360]; [EX1004, 298]; [EX1013, 3].

In the MAGS-Polivka combination, the combined device would have (1) the MAGS mobile power generation system; and (2) the Polivka mobile Bitcoin miner, wherein the Bitcoin mining devices (e.g., spondooliestech SP35 servers) are connected to and powered by the MAGS mobile power generation system. [EX1003, 361]; [EX1004, 299].

4. Analysis

Limitation [1pre]

To the extent the preamble is limiting, the MAGS-Polivka combination renders [1pre] obvious. [EX1003, 363]. For example, MAGS is a mobile power generation system that can generate electricity using flare gas (raw natural gas that is to be flared) at an oil and gas production facility. [EX1013, 2]. Polivka also discloses a Bitcoin miner system. [EX1015, 1-10].

Limitation [1a]

Pioneer Energy's Mobile Alkane Gas Separator (MAGS) system separates **flare gases** that naturally occur at drilling sites into three streams: one can be captured in tanks and shipped off for sale, another **powers generators** that run the

drilling operation, and a third powers MAGS itself. [EX1013, 2]. Thus, MAGS discloses [1a]. [EX1003, 364-365].

Limitation [1b]

MAGS separates **flare gases** that naturally occur at drilling sites into three streams: one can be captured in tanks and shipped off for sale, another **powers generators** that run the drilling operation, and a third powers MAGS itself. [EX1013, 2]. Thus, MAGS discloses [1b]. [EX1003, 366-367].

Limitation [1c]

As discussed above in Section IV.C.3, in the MAGS-Polivka combination, the combined device would have (1) the MAGS mobile power generation system; and (2) the Polivka mobile Bitcoin miner, wherein the Bitcoin mining devices (e.g., spondooliestech SP35 servers) are connected to and powered by the MAGS mobile power generation system. [EX1003, 368-369].

Limitation [1c_i]

Polivka can carry various miners including Spondoolies-Tech SP31 and Bitmain Antminer S19. [EX1015, 17]. Digital currency mining requires access to Internet. [EX1015, 13]. A POSITA would have found it obvious that the blockchain mining devices (e.g., Spondoolies-Tech SP31) each have a mining processor and are connected to a network interface (e.g., a modem or a router). [EX1004, 306-307]. MAGS also includes a network interface in the form of a

wireless router. [EX1014, FIG. 18, [0273]].

Limitation [1c_ii]

Polivka can carry various miners including Spondoolies-Tech SP31 and Bitmain Antminer S19. [EX1015, 17]. Digital currency mining requires access to Internet. [EX1015, 13]; [EX1004, 308]. A POSITA would have understood that to mine digital currency, the miner needs to receive and transmit data through the internet to a network that stores or has access to a blockchain database. [EX1010, [0004]]; [EX1004, 308-311].

Limitation [1c_iii]

Polivka can carry various miners including Spondoolies-Tech SP31 and Bitmain Antminer S19. [EX1015, 17]. Digital currency mining requires access to Internet. [EX1015, 13]. A POSITA would have understood that to mine digital currency, the mining processors need to be connected to the network interface and adapted to mine transactions associated with the blockchain database and to communicate with the blockchain database. [EX1010, [0004]]; [EX1004, 312-315].

Limitation [1c_iv]

A POSITA would have understood that Bitcoin mining is conducted on a peer-to-peer network, because the Bitcoin protocol defines a system in which the creation and distribution of the Bitcoin digital currency is governed by consensus

among a peer-to-peer network. [EX1010, [0004]]; [EX1004, 316].

Thus, a POSITA would have found it obvious that the network is a peer-to-peer network. [EX1004, 317-318].

Limitation [1c_v]

A POSITA would have understood that in a digital currency network, the blockchain database is a distributed database stored on plural nodes in the peer-to-peer network. [EX1010, [0004]]; [EX1004, 319-321].

Limitation [1c_vi]

A POSITA would have understood that in a digital currency network, the blockchain database stores transactional information for a digital currency. [EX1010, [0004]]; [EX1004, 322-324].

Limitation [2.0]

MAGS utilizes flare gas that is flared because natural gas pipelines are not in place when the oil well is drilled. [EX1014, [0084], EX1013, 2]. Thus, a POSITA would have understood that the system is isolated from a sales gas line. [EX1003, 376].

In remote drilling sites isolated from an external power grid, MAGS is designed to replace the diesel generators powering the oil drilling rig. [EX1013, 3, Young, [0006], [0133], [0146]]. A POSITA would have understood that diesel-powered generators are needed because the system is isolated from an external

electrical power grid. [EX1003, 377-378].

Limitation [3.0]

MAGS utilizes flare gas that is burned because natural gas pipelines are not in place when the oil well is drilled. [EX1014, [0084], EX1013, 2]; [EX1003, 379]. Young explains that often the locations of such flares are remote and far from human operations. [EX1014, [0010]]. Thus, MAGS is deployed at an oil and gas field system, to utilize the flare gas produced from a remote well. [EX1014, [0011]-[0012], [0056]]. Indeed, Young explains that "[t]he MAGS is designed to receive the wellhead natural gas 701 from a remote field location." [EX1014, [0188]].

Limitation [4.0]

MAGS uses methane to run a generator to replace the diesel generators powering the oil drilling rig. [EX1013, 3]; [EX1003, 381]. As shown in FIG. 8 of Young, MAGS comprises a combustion engine connected to drive the generator. [EX1014, [0323]]; [EX1003, 381-382].

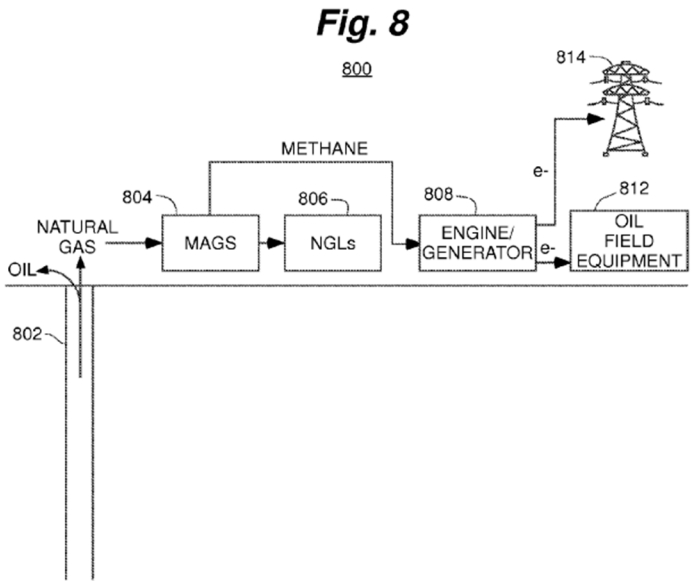

[EX1014, FIG. 8]

Limitation [8.0]

Both MAGS and the Polivka system are containerized to confer better mobility. [EX1014, [0162], FIG. 4]; [EX1015, 1-10]. Thus, it is easy to combine the two by simply placing the respective equipment of the two containerized mobile systems into a single container. Thus, since the combined device is mobile, in order to save infrastructure costs and to avoid transporting the flare gas over a long distance, a POSITA would have found it obvious that the generator and blockchain mining devices are located adjacent to the facility (e.g., within one hundred meters). [EX1003, 383-386].

Limitation [16.0]

Polivka contains a cooling fan, multiple Bitcoin miners on a rack, and a

power distribution box on the left side. [EX1015, 31]; [EX1004, 332].

[EX1015, 31].

Polivka contains a power distribution box that controls the power distribution to various components. [EX1015, 8]; [EX1004, 333].

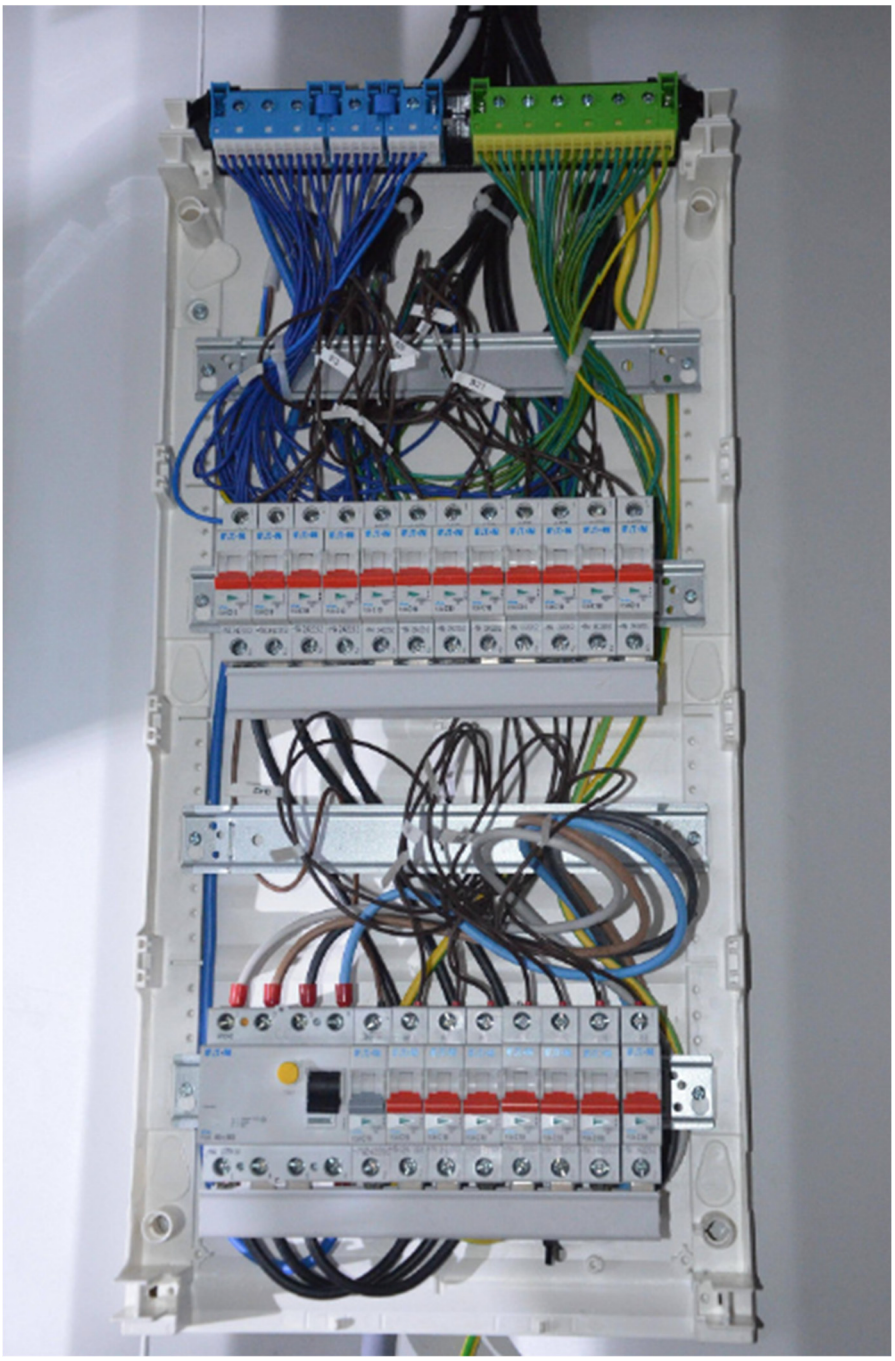

[EX1015, 8].

Thus, a POSITA would have found it obvious that a controller (power distribution box) is connected to operate a cooling system (fans) to maintain the blockchain mining devices within a predetermined operating range of temperature.

[EX1004, 334-335].

Limitation [17.0]

Both MAGS and the Polivka system are containerized to confer better mobility. [EX1014, [0162], FIG. 4]; [EX1015, 1-10]. Polivka is adapted from a standard intermodal shipping container, and can be easily transported to remote well sites. [EX1015, 1-10]; [EX1019, 0:00:08].

[EX1015, 1]

A related video also shows that the Polivka system is mounted on a trailer. [EX1019, 0:00:08]; [EX1003, 388-391]; [EX1004, 336-339].

Limitation [18.0]

Both MAGS and the Polivka system are containerized to confer better mobility. [EX1014, [0162], FIG. 4]; [EX1015, 1-10]. Thus, it is easy to combine

the two by simply placing the respective equipment of the two containerized mobile systems into a single container. A POSITA would have been motivated to do so because it will further save transportation costs. [EX1003, 392].

MAGS uses methane to run a generator to replace the diesel generators powering the oil drilling rig. [EX1013, 3]. As shown in FIG. 8 of Young, MAGS comprises a combustion engine connected to drive the generator. [EX1014, [0323]]; [EX1003, 393-395]; [EX1004, 340-343].

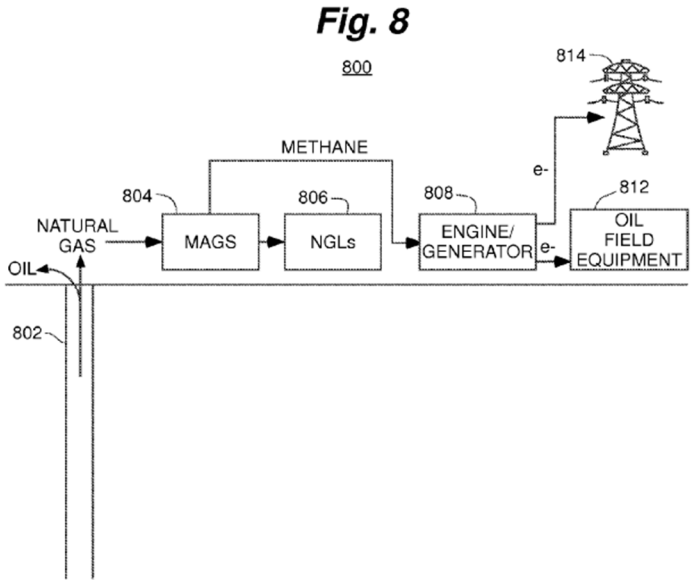

[EX1014, FIG. 8]

Limitation [19.0]

MAGS uses methane to run a generator to replace the diesel generators powering the oil drilling rig. [EX1013, 3]. As shown in FIG. 8 of Young, MAGS comprises a combustion engine connected to drive the generator. [EX1014,

[0323]]. A POSITA would have found it obvious that the onsite power generator is driven by an engine that comprises a turbine. [EX1003, 396-397]; [EX1004, 344].

Limitation [20.0]

Both MAGS and the Polivka system are containerized to confer better mobility. [EX1014, [0162], FIG. 4]; [EX1015, 1-10]. Polivka is adapted from a standard intermodal shipping container, and can be easily transported to remote well sites. [EX1015, 1-10]; [EX1019, 0:00:08].

[EX1015, 1]

A related video also shows that the Polivka system is mounted on a trailer. [EX1019, 0:00:08]; [EX1003, 398-400]; [EX1004, 345-347].

Limitation [21.0]

Both MAGS and the Polivka system are containerized to confer better

mobility. [EX1014, [0162], FIG. 4]; [EX1015, 1-10]. Polivka is adapted from a standard intermodal shipping container, and can be easily transported to remote well sites. [EX1015, 1-10]; [EX1019, 0:00:08].

[EX1015, 1]

As shown in a related video [EX1019], the portable enclosure has the form of a box with walls, a top, and a base, with one or more access doors formed in the walls. [EX1003, 401-403]; [EX1004, 348-350].

[EX1019, 0:00:08].

Limitation [22.0]

MAGS includes a combustible gas disposal device (e.g., compressor 908 or CNG storage cylinders 910), which is connected to receive combustible gas from the source. [EX1014, [0274], FIG. 9]; [EX1003, 404-405]. MAGS also discloses a gas disposal device in the form of a flare—"the remaining ethane-rich gas that is not needed for power generation may be flared." [EX1014, [0142]].

Further, a POSITA would have found it obvious that the drilling site may produce an amount of flare gas that exceeds the capacity of MAGS, and would have found it obvious to have kept the existing flare at the site. [EX1003, 406-407].

Limitation [24pre]

To the extent the preamble is limiting, the MAGS-Polivka combination renders [24pre] obvious. [EX1003, 408]. For example, MAGS provides a method to generate electricity using flare gas (raw natural gas that is to be flared) at an oil and gas production facility. [EX1013, 2].

Limitation [24a]

MAGS separates **flare gases** that naturally occur at drilling sites into three streams: one can be captured in tanks and shipped off for sale, another **powers generators** that run the drilling operation, and a third powers MAGS itself. [EX1013, 2]. MAGS is deployed at an oil and gas field system, to utilize the flare gas produced from a remote well. [EX1014, [0011]-[0012], [0056]]; [EX1003, 409-410].

Limitation [24b]

As discussed above in Section IV.C.3, in the MAGS-Polivka combination, the combined device would have (1) the MAGS mobile power generation system; and (2) the Polivka mobile Bitcoin miner, wherein the Bitcoin mining devices (e.g., spondooliestech SP35 servers) are connected to and powered by the MAGS mobile power generation system. [EX1003, 411-412].

Limitation [24c]

MAGS separates **flare gases** that naturally occur at drilling sites into three

streams: one can be captured in tanks and shipped off for sale, another **powers generators** that run the drilling operation, and a third powers MAGS itself. [EX1013, 2]; [EX1003, 413-414].

Limitation [24d_i]

See [1c_i].

Limitation [24d_ii]

See [1c_ii].

Limitation [24d_iii]

See [1c_iii].

Limitation [24d_iv]

See [1c_iv].

Limitation [24d_v]

See [1c_v].

Limitation [24d_vi]

See [1c_vi].

Limitation [25.0]

A POSITA would have understood that prior to using the source of combustible gas, the source of combustible gas needs to be disconnected or diverted from a combustible gas disposal device (a flare) to MAGS, and to operate the blockchain mining devices in Polivka. [EX1003, 421-422].

Limitation [26.0]

A POSITA would have found it obvious that the drilling site may produce an amount of flare gas that exceeds the capacity of MAGS, and would have found it obvious to have kept the existing flare at the site. [EX1003, 423-424].

Limitation [27.0]

MAGS discloses a gas disposal device in the form of a flare—"the remaining ethane-rich gas that is not needed for power generation may be flared." [EX1014, [0142]]. A POSITA would have found it obvious that the drilling site may produce an amount of flare gas that exceeds the capacity of MAGS, and would have found it obvious to have kept the existing flare at the site and only divert a portion of the gas to operate MAGS and the blockchain mining devices in Polivka. [EX1003, 425-426].

Limitation [28.0]

See [2.0] above.

Limitation [29.0]

See [3.0] above.

Limitation [30.0]

See [4.0] above.

Limitation [34.0]

As [24d_iii] above, the mining processors are connected to the network interface and adapted to mine transactions associated with the blockchain database

and to communicate with the blockchain database. A POSITA would have found it obvious that the network interface connection could be a wireless connection. [EX1014, FIG. 18]; [EX1004, 370-371].

E. GROUND 5

1. The combination of MAGS, Polivka, and Belady-989

A POSITA would have been motivated to combine MAGS, Polivka, and Belady-989. [EX1003, 432-439]; [EX1004, 373-380]. As discussed above, in the MAGS-Polivka combination, the combined device would have (1) the MAGS mobile power generation system; and (2) the Polivka mobile Bitcoin miner, wherein the Bitcoin mining devices (e.g., spondooliestech SP35 servers) are connected to and powered by the MAGS mobile power generation system. [EX1003, 432-436].

Belady-989 describes a gas supply shock absorber (containing a gas storage) that is used to improve a data center system powered by a natural gas generator. [EX1011, Abstract]. If the shock absorber has sufficient gas, a co-located data center utilizes such gas for increased electrical power generation during increased processing activity, which can be requested or generated. [EX1011, Abstract]. Conversely, if the shock absorber has insufficient gas, and a negative pressure spike occurs, the data center throttles down or offloads processing. [EX1011, Abstract].

A POSITA would have understood that the flow of raw natural gas from the oil and gas facility may fluctuate and would have been motivated to further improve the MAGS-Polivka combination by employing Belady-989's gas supply shock absorber because doing so will improve the energy usage efficiency. [EX1003, 437-438]. Indeed, Belady-989 discloses data centers often consume large quantities of electrical power, and should be located in areas where natural resources (e.g., flare gas), from which electrical power can be derived, are abundant and can be obtained inexpensively. [EX1011, [0004]]. Szmigielski also discloses that "[i]ndustrial miners face almost the same issues as data centers: access to relatively cheap power, good network access…" [EX1009, 103]. Thus, a POSITA would have been motivated to combine MAGS, Polivka and Belady-989, to use Belady-989's gas supply shock absorber to improve energy usage efficiency. [EX1003, 438].

In the MAGS-Polivka-Belady-989 combination, the combined device would have (1) the MAGS mobile power generation system; (2) the Polivka mobile Bitcoin miner, wherein the Bitcoin mining devices (e.g., spondooliestech SP35 servers) are connected to and powered by MAGS; and (3) Belady-989's gas supply shock absorber. [EX1003, 439].

2. Analysis

Limitation [1pre]

See Ground 4.

Limitation [1a]

See Ground 4.

Belady-989 further discloses data centers often consume large quantities of electrical power, and should be located in areas where natural resources (e.g., flare gas), from which electrical power can be derived, are abundant and can be obtained inexpensively. [EX1011, [0004]]. Belady-989 further discloses that gas supply 110 can be from gas produced as a waste product of oil drilling. [EX1011, [0028]]; [EX1003, 442-444].

Limitation [1b]

See Ground 4.

Belady-989 further discloses that gas-to-electricity converter 180 can be a generator. [EX1011, [0019]]; [EX1003, 445-447].

Limitation [1c]

See Ground 4.

Limitation [1c_i]

See Ground 4.

Further, Belady-989 discloses that "the data center 190 can comprise a communication connection 191 to a network 199." [EX1011, [0029]]; [EX1003, 449-450].

Limitation [1c_ii]

See Ground 4.

Limitation [1c_iii]

See Ground 4.

Limitation [1c_iv]

See Ground 4.

Limitation [1c_v]

See Ground 4.

Limitation [1c_vi]

See Ground 4.

Limitation [2.0]

See Ground 4.

Belady-989 further discloses data centers often consume large quantities of electrical power, and should be located in areas where natural resources (e.g., flare gas), from which electrical power can be derived, are abundant and can be obtained inexpensively. [EX1011, [0004]]. Specifically, Belady-989 explains that "natural gas is a byproduct of oil drilling operations and is often considered a waste byproduct since it cannot be economically captured and brought to market." *Id*. Belady-989 further discloses that gas supply 110 can be from gas produced as a waste product of oil drilling. [EX1011, [0028]]; [EX1003, 456-458].

Limitation [3.0]

See Ground 4.

Belady-989 further discloses that it has become more practical to perform digital data processing at a location **remote** from the location where such data is initially generated, and where the processed data will be consumed. [EX1011, [0002]]; [EX1003, 459-461].

Limitation [4.0]

See Ground 4.

Limitation [8.0]

See Ground 4.

Limitation [10.0]

Belady-989 describes a gas supply shock absorber (containing a gas storage) that is used to improve a data center system powered by a natural gas generator. [EX1011, Abstract]. If the shock absorber has sufficient gas, a co-located data center utilizes such gas for increased electrical power generation during increased processing activity, which can be requested or generated. [EX1011, Abstract]. Conversely, if the shock absorber has insufficient gas, and a negative pressure spike occurs, the data center throttles down or offloads processing. [EX1011, Abstract]. A POSITA would have found it obvious to control power load level of Polivka (e.g., by turning off a certain number of mining processors) using Belady-989's method based on input from Belady-989's tank pressure sensor to increase

energy usage efficiency. [EX1003, 464-466].

Thus, in the MAGS-Polivka-Belady-989 combination, the system is configured to modulate a power load level exerted by the blockchain mining devices on the generator, by increasing or decreasing the mining activity of the mining processor. [EX1003, 464-467].

Limitation [11.0]

As discussed above for [10.0], A POSITA would have found it obvious to control power load level of Polivka (e.g., by turning off a certain number of mining processors) using Belady-989's method based on input from Belady-989's tank pressure sensor to increase energy usage efficiency. [EX1003, 468-469]. For example, a POSITA would have found it obvious to adjust the mining activity of the mining processors by increasing or decreasing a maximum number of mining processors that are engaged in mining transactions. [EX1003, 468].

Limitation [12.0]

As discussed above for [10.0], a POSITA would have found it obvious to control power load level of Polivka (e.g., by turning off a certain number of mining processors) using Belady-989's method based on input from Belady-989's tank pressure sensor to increase energy usage efficiency. [EX1003, 470-472].

Belady-989 discloses that its gas supply shock absorber comprises **pressure sensing valves and pressure regulating valves**, which can detect positive

pressure spikes in the gas supply and enable such overly pressurized gas to charge the gas storage, and which can also detect negative pressure spikes in the gas supply and, in response, make available the gas stored in the gas storage to compensate for such negative pressure spikes. [EX1011, [0015]]. Belady-989 further discloses that **if the gas storage has a sufficient quantity of gas** stored therein, the data center can utilize such gas to provide increased electrical power during periods of increased processing activity and workload. [EX1011, [0015]]. Conversely, **if the gas storage has an insufficient quantity of gas** stored therein, and the gas supply experiences a negative pressure spike, the computing devices of the data center can be throttled down to consume less electrical power. [EX1011, [0015]]. A POSITA would have found it obvious that Belady-989's gas pressure sensor regulates the power load level of the Bitcoin miners (.g., by turning off a certain number of mining processors) based on input from Belady-989's tank pressure sensor in response to variations in a production rate of combustible gas. [EX1003, 471].

Limitation [15.0]

As discussed above for [10.0], a POSITA would have found it obvious to control power load level of Polivka (e.g., by turning off a certain number of mining processors) using Belady-989's method based on input from Belady-989's tank pressure sensor to increase energy usage efficiency. [EX1003, 473].

Further, Belady-989 discloses "**positive gas pressure spikes** can occur with an average frequency such as, for example, occurring, on average, once every couple of hours or once every couple of days" [EX1011 [0036]]. This corresponds to the available fuel spikes in FIG. 5A in the '372 patent. [EX1003, 474].

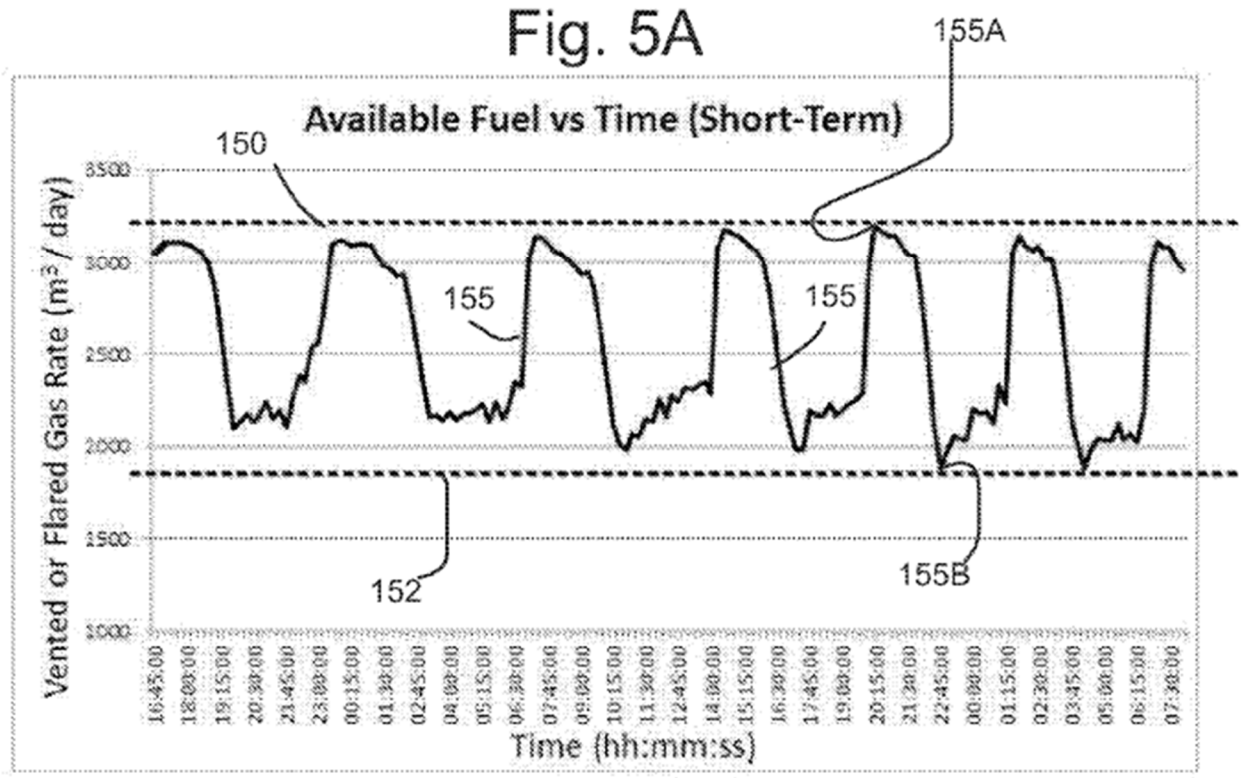

['372 patent, FIG. 5A].

Thus, Belady-989 discloses that a production rate (positive gas pressure) of combustible gas from the hydrocarbon production well, storage, or processing facility **varies between a daily minimum production rate and a daily maximum production rate**. [EX1003, 474].

Belady-989 further discloses that such historical data (of positive gas

pressure spikes) can be taken into account to control the power load level of the data center. [EX1011, [0036]]. For example, if there is no anticipated positive gas pressure spike, one or more individual processing units can be throttled down, to reduce the overall energy consumption of the data center. [EX1011, [0036]]. When there are anticipated positive gas pressure spikes, a POSITA would have found it obvious to limit the power load level to above a power level producible by the generator when the production rate is at the daily minimum production rate, to fully make use of the generated electricity. [EX1003, 475].

Belady-989 discloses a backup source of fuel in the form of gas storage 160. Specifically, Belady-989 discloses that "[**s]hould the gas supply 110 subsequently experience a negative gas pressure spike**, such that the pressure of the gas supplied by the gas supply 110 decreases, in one embodiment, the gas pressure sensor 151 of the pressure sensing valve 150 can detect such a decrease in the gas pressure and can cause the gas shutoff valve 152 to open to enable gas from the gas storage 160 to flow into the piping 120, thereby increasing the gas pressure in the piping 120 and **providing the gas-to-electricity converter 180 with a sufficient pressure to continue to provide sufficient electrical power 181 to the data center**." [EX1011, [0025]]; [EX1003, 476].

Thus, Belady-989 discloses a backup source is connected make up a shortfall in fuel required to supply the blockchain mining devices with the power

load level. [EX1003, 473-478].

Limitation [16.0]

See Ground 4.

Limitation [17.0]

See Ground 4.

Limitation [18.0]

See Ground 4.

Limitation [19.0]

See Ground 4.

Limitation [20.0]

See Ground 4.

Limitation [21.0]

See Ground 4.

Limitation [22.0]

See Ground 4.

Belady-989 further discloses that the gas diverter valve 133 can be triggered and the gas provided by the gas supply 110 can be vented as vented gas 111. [EX1011, FIG. 1, [0028]]; [EX1003, 484-486].

Limitation [23.0]

Belady-989 discloses that the gas diverter valve 133 can be triggered and the gas provided by the gas supply 110 can be vented as vented gas 111. [EX1011,

FIG. 1, [0028]]; [EX1003, 487-489].

Limitation [24pre]

See Ground 4.

Limitation [24a]

See Ground 4.

Belady-989 further discloses data centers often consume large quantities of electrical power, and should be located in areas where natural resources (e.g., flare gas), from which electrical power can be derived, are abundant and can be obtained inexpensively. [EX1011, [0004]]. Belady-989 further discloses that gas-to-electricity converter 180 can be a generator. [EX1011, [0019]]. Belady-989 further discloses that gas supply 110 can be from gas produced as a waste product of oil drilling. [EX1011, [0028]]; [EX1003, 491-493].

Limitation [24b]

See Ground 4.

Limitation [24c]

See Ground 4.

Limitation [24d_i]

See Ground 4.

Further, Belady-989 discloses that "the data center 190 can comprise a communication connection 191 to a network 199." [EX1011, [0029]]; [EX1003,

496-497].

Limitation [24d_ii]

See Ground 4.

Limitation [24d_iii]

See Ground 4.

Limitation [24d_iv]

See Ground 4.

Limitation [24d_v]

See Ground 4.

Limitation [24d_vi]

See Ground 4.

Limitation [25.0]

See Ground 4.

Limitation [26.0]

See Ground 4.

Belady-989 further discloses that the gas diverter valve 133 can be triggered and the gas provided by the gas supply 110 can be vented as vented gas 111. [EX1011, FIG. 1, [0028]]; [EX1003, 504-506].

Limitation [27.0]

See Ground 4.

Belady-989 further discloses that the gas diverter valve 133 can be triggered

and the gas provided by the gas supply 110 can be vented as vented gas 111. [EX1011, FIG. 1, [0028]]; [EX1003, 507-509].

Limitation [28.0]

See Ground 4.

Belady-989 further discloses data centers often consume large quantities of electrical power, and should be located in areas where natural resources (e.g., flare gas), from which electrical power can be derived, are abundant and can be obtained inexpensively. [EX1011, [0004]]. Specifically, Belady-989 explains that "natural gas is a byproduct of oil drilling operations and is often considered a waste byproduct since it cannot be economically captured and brought to market." *Id*. Belady-989 further discloses that gas supply 110 can be from gas produced as a waste product of oil drilling. [EX1011, [0028]]; [EX1003, 510-512].

Limitation [29.0]

See Ground 4.

Belady-989 further discloses that it has become more practical to perform digital data processing at a location **remote** from the location where such data is initially generated, and where the processed data will be consumed. [EX1011, [0002]]; [EX1003, 513-515].

Limitation [30.0]

See Ground 4.

Limitation [34.0]

See Ground 4.

Limitation [35.0]

See [10.0] above.

Limitation [36.0]

See [11.0] above.

Limitation [37.0]

See [12.0] above.

Limitation [40.0]

See [15.0] above.

V. THE CHALLENGED CLAIMS ARE UNPATENTABLE UNDER 35 U.S.C § 101

The U.S. Supreme Court has held that under 35 U.S.C. § 101 "[l]aws of nature, natural phenomena, and abstract ideas are not patentable." *Alice Corp. Pty. v. CLS Bank Int'l*, 573 U.S. 208, 216 (2014). A two-step analysis is used to determine if patent claims are directed to § 101 ineligible abstract ideas. *Yu v. Apple Inc.*, 1 F.4th 1040, 1043 (Fed. Cir. 2021). Step one requires the determination of whether a patent claim is directed to unpatentable subject matter such as an abstract idea. *Id.* (citing *Alice*, 573 U.S. at 217). If so, the inquiry proceeds to step two to determine whether the claim includes an "inventive

concept" transforming the claim into a patent-eligible application of the unpatentable subject matter. *Id.*

In evaluating claims in step one, the claims must claim more than a result—it must claim a way of achieving it. *Am. Axle & Mfg., Inc. v. Neapco Holdings LLC*, 967 F.3d 1285, 1296 (Fed. Cir. 2020). However, when the claim is "directed to a *result or effect* that itself is the abstract idea and *merely invoke*[*s*] generic processes and machinery" to achieve it and not a means to improve the existing technology, the claim is directed to an abstract idea. *Yu*, 1 F.4th at 1043 (emphasis added). In claims that recite generic machinery, the court must question whether the claims are directed to any specific improvements of device operation. *Solutran, Inc. v. Elavon, Inc.*, 931 F.3d 1161, 1167 (Fed. Cir. 2019) (citing *Enfish, LLC v. Microsoft Corp.*, 822 F.3d 1327, 1336 (Fed. Cir. 2016)).

Claims directed to abstract ideas are subject to the scrutiny of the second step to determine whether the claim does *significantly* more than express the abstract idea. *See Ultramercial, Inc. v. Hulu, LLC*, 772 F.3d 709, 715 (Fed. Cir. 2014). To find the "inventive concept" the focus is on the claims and whether they claim transformative elements that change unpatentable subject matter into a patent-eligible application. *Am. Axle*, 967 F.3d at 1293. The claims must go beyond the "application of an abstract idea using conventional and well-understood

techniques." *Sanderling Mgmt. Ltd. v. Snap Inc.*, 65 F.4th 698, 704-05 (Fed. Cir. 2023).

A. The '372 Patent Is Ineligibly Abstract

The '372 Patent centers around the abstract idea of using natural gas to power a blockchain mine. [EX1001, Abstract]; [EX1003, 522-524]. The claims recite nothing more than "generic processes and machinery" to achieve the result of powering a blockchain mine with natural gas. *Yu*, 1 F.4th at 1043 (explaining that reciting generic equipment does not save a claim from being directed to an abstract idea); [EX1003, 522]. Furthermore, the Patent freely admits that generating power from natural gas at well site is not a new idea. [EX1001, 6:56-58, 10:27-29 (stating that well operators already use the gas to power on-site equipment and that existing power equipment may be used to power the blockchain mine)]. The so-called innovation that remains is that the patent is directed to is the application of the abstract idea of using such power for blockchain mining. However, this represents nothing more than a limitation to a particular technological environment, which cannot save the claims. *Ultramercial*, 772 F.3d at 709.

For example, the language of Claim 1 clearly invokes nothing more than combining generic machinery operating as intended to achieve the intended result as in *Yu*. [EX1003, 523]. The recited generator in Claim 1 produces power using

the gas without any limitation, and the specification even explains that existing on-site generators operating—conventionally—suffice. [EX1001, 10:27-29, 11:11-14, 16:44-49]. Furthermore, the recited blockchain mine, despite the listed limitations, only operates as any "digital mine" normally would and consists of standard computer hardware programmed to perform digital transactions over the internet identically to how all blockchain mine operate as described in the specification. [EX1004, 440]; [*Compare* EX1001, Cl. 1 (claiming a blockchain mine), *with* EX1001, 11:55-57, 11:67-12:4, 13:5-7, 13:15-19, 13:22-27, 13:49-52, 15:22-59 (describing the known general composition and operation of blockchain mining devices)].

Claim 1 itself, however, is far broader than the Patent describes as it simply refers to a source of "combustible gas" from either a hydrocarbon production, storage or processing facility. [EX1003, 524]. This is also supported by the Patent's specification. EX1001, 1:17-19, 2:47-48. In fact, Claim 1 is so broad that any means of generation using combustible gas and any computerized means of blockchain mining are claimed. [EX1001, 9:66-10:8, 15:22-40]; [EX1004, 440]. This preempts any innovation within the broad field of using field gas to power any kind of blockchain computer. *Mayo*, 132 S.Ct. at 1297. Nothing in this Patent suggests that it claims any "specific means or method that improves the relevant technology." *Yu*, 1 F.4th at 1043.

B. The ’372 Patent Contains No “Inventive Concept” to Transform the Abstract Idea into a Patent-Eligible Application.

The challenged claims do not fare any better under step two. [EX1003, 525-526]. Limitations that are “well-understood, routine, conventional activity already engaged in by the [relevant] community; and those steps, when viewed as a whole, add nothing significant beyond the sum of their parts taken separately. . . are not sufficient to transform unpatentable [ideas] into patentable applications of those [ideas].” *Mayo,* 132 S.Ct. at 1298. The Board has said that to avoid monopolizing an abstract idea, “the claim must contain more than mere field-of-use limitations, tangential references to technology, insignificant pre- or post-solution activity.” *SAP Am., Inc. v. Versata Dev. Grp., Inc.*, CBM2012-00001, 29 (Trial Decision, Jan. 9, 2013) (Paper 36).

As explained above, the ’372 Patent invokes little more than conventional equipment used in a conventional manner to perform the abstract idea of powering digital currency mining with field gas. While the Patent claims that putting a blockchain mine at an oil or gas facility is inventive, [EX1001, Technical Field], this is not even a threshold limitation for most of the system claims. Claim 1, for example, does not even require the computers be located at or near such a facility. Further, before the priority date, well operators had been using well gas to generate power to run mining facilities. [EX1005, [0024]]; [EX1013, 2].

The purported "innovative" idea behind Upstream's patent can be distilled into geographically locating any energy intensive computing process near a cheap source of energy. [EX1003, 526]. However, this concept is neither innovative nor new. [EX1001, 14:4-7 (stating that locations near hydroelectric power have typically been favored due to its low cost)]; [EX1009, 86]. What is absent from the Patent is the required improvement of, or an innovation to, the underlying claimed conventional technology to create a meaningful limitation. Further, this is not resolved by any additional features described in specification embodiments or dependent claims because the dependent claims only add other conventional components, claim other abstract features, or engage in insignificant pre- or post-solution activity and features added in the specification are irrelevant. *See Am. Axle*, 967 F.3d at 1293. The bottom line is the Patent does not claim a new or unique method of power generation, nor does it claim a new or unique method of blockchain mining. Rather, it claims nothing more than plugging a conventional blockchain miner into a conventional generator system. *Sanderling*, 65 F.4th at 704-05; *see also Yu*, 1 F.4th at 1045 (claiming conventional equipment operating as expected cannot provide the necessary "inventive concept"). Thus, the '372 fails to recite significantly more than an abstract idea.

C. Claim 1 Is Representative of the Entire '372 Patent.

An entire patent's eligibility analysis under § 101 can be conducted using a single representative claim if all the claims are "substantially similar and linked to the same abstract idea." *Content Extraction & Transmission LLC v. Wells Fargo Bank, Nat. Ass'n*, 776 F.3d 1343, 1348 (Fed. Cir. 2014). Here, Claim 1 of the '372 Patent is representative of all the patent claims. [EX1003, 527-530].

First, Claim 24 is the only other independent claim than Claim 1. Claim 24 recites virtually identical limitations as Claim 1 and is merely fashioned as method claim rather than a system claim to perform the same abstract idea. [EX1003, 528].

Second, claims 2-9, 17-23, and 25-34 add no technological improvement to any element of Claim 1 or 24. Rather, they represent various examples of different iterations of how the abstract idea can be used or token post-solution limitations and are thereby linked to the same abstract idea and substantially similar. *See* [EX1003, 529]; *Bilski v. Kappos*, 561 U.S. 593, 612 (2010).

Third, claims 10-15 and 35-41 are directed to the abstract idea of modulating the power load of the blockchain device. These are common-sense insignificant post-solution activities. Just as laptops throttle performance in response to a low battery, or a facility that uses a backup power generation system, these claims are directed to conventional, known, and routine industry practices. [EX1003, 530]. The claims are simply directed to the intended result of modulated power usage

with assumption someone will apply it. This is unpatentable. *See Alice*, 573 U.S. at 221.

VI. PTAB DISCRETION SHOULD NOT PRECLUDE INSTITUTION

Upstream filed its complaint relating to the ’372 Patent on May 18, 2023. EX1100, 13. This petition is being filed before an answer to the complaint or any procedural schedule has been entered. Thus, there are no present deadlines for *Markman* briefing, contentions, or trial. Given Crusoe’s diligence in filing the present petition before answering the complaint, the *Fintiv* factors, and recent Board decisions applying them, weigh against discretionary denial. *Apple Inc. v. Fintiv, Inc*., IPR2020-00019, Paper 11, 5-6 (P.T.A.B. May 13, 2020) (precedential)).

A. Factor 1: Either Party May Request Stay

Factor 1 favors Petitioner because Crusoe is filing a motion to stay in the counterpart litigation either today or tomorrow.

B. Factor 2: The Trial Schedule is Unclear

The trial date has not yet been scheduled. However, because of Petitioner’s diligence in filing this petition within three months of being served with a complaint, the Final Written Decision (“FWD”) will likely issue months before the trial date.

C. Factor 3: Petitioner's Diligence and Investment in PGR Outweighs the Parties' Minimal Investment in Litigation

Petitioner filed this petition at a very early stage of the litigation—a fact that "has weighed against exercising the authority to deny institution under *NHK*." *Apple Inc. v. Seven Networks LLC et al.*, IPR2020-00156, Paper 10 at 11-12 (P.T.A.B. June 15, 2020).

D. Factor 4: The Petition's Grounds Are Materially Different From Any That Might Be Raised in Litigation

The parallel case has barely begun. Any possible overlap between these two proceedings would be completely speculative. As such, this factor supports institution.

E. Factor 5: Party Overlap

As with most PGRs, Petitioner and Upstream are parties to the co-pending litigation.

F. Factor 6: The Merits of this Petition Strongly Favor Institution

The merits of this Petition are particularly strong. As demonstrated in the Petition with reference to testimony from Dr. Michael Nickolaou and Mr. Vernon Kasdorf, institution would result in a finding of unpatentability of the Challenged Claims, which are obvious based on prior art references that materially differ from those considered by the Office during prosecution.

G. Considerations Implicated by 35 U.S.C. § 325(d)

To determine whether to institute Crusoe's Petition, the Board will consider "whether the same or substantially the same" art or arguments were "previously presented to the Office" and, if so, the Board will then also consider whether Petitioner has "demonstrated that the Office erred in a manner material to the patentability of the challenged claims."[5]

The art and arguments presented in this petition are not the same or substantially the same as those previously presented to the office. And, even if the Board deems otherwise, the Office erred in a manner material to the patentability of the challenged claims. Therefore, discretionary denial is not warranted.

1. The Art and Arguments Presented are Not the Same or Substantially the Same as those Previously Presented to the Office

Dickerson, CryptoKube, Szmigielski, Kheterpal, Boot, Pioneer Energy's MAGS system, and Polivka were not considered during examination of the '372 patent. Moreover, Dickerson, CryptoKube, Szmigielski, Kheterpal, Boot, Pioneer Energy's MAGS system, and Polivka are not cumulative of previously considered art, and do not raise previously considered arguments. While Belady-837 (not

[5] *Advanced Bionics, LLC v. MED-EL Elektromedizinische Geräte GmbH*, IPR20109-01469, Paper 6 at 8 (PTAB Feb. 13, 2020) (precedential)

asserted herein), a reference similar to Belady-989 (asserted herein), was discussed during prosecution of the ’372 patent, as discussed below, this reference was used in a very different manner.

On April 19, 2022, the Office rejected the pending claims for obviousness over Belady-837 and Gleifchauf, stating that Belady-837 discloses using a gas generator to power a data center (blockchain mining device), and Gleifchauf discloses using servers for blockchain mining and verification. EX1002, 336-337. Thus, during prosecution the Office used Belady-837 for teaching using a gas generator to power a data center (blockchain mining device). By contrast, Petitioner primarily relies on Belady-989 for its teachings regarding power load control (adjusting the power load level of the data center based on availability of flare gas). See Ground 2 and Ground 5 above.

In summary, there are material differences between the art asserted in Petitioner’s challenges and the prior art involved during examination, and the asserted art is not cumulative to the art involved during examination. Additionally, none of the prior art combinations in Grounds 1-5 were used as a basis for any rejections during examination of the ’372 patent and the arguments made during examination do not overlap with the manner in which Petitioner relies on Belady-989 in the Petition. Accordingly, Petitioner does not present the same or substantially the same prior art or arguments that were previously presented to the

Office and the Board should not deny institution under 35 U.S.C. § 325(d).

2. The Office Erred in a Manner Material to the Patentability of the Challenged Claims

During prosecution, the Office allowed the amended claims because (1) Applicant argued that blockchain mining is meaningfully different from traditional data-processing because it requires more energy; [EX1002, 222-223] and (2) Applicant argued that its "discovery amounts to a new use for previously known individual components (a common precursor for patentability), and may provide numerous benefits including the reduction of greenhouse gas emissions and capture of revenue where gas disposal is otherwise a capital loss (for example paragraphs 33, 34, 48, and 73). [EX1002, 223].

However, as explained by Szmigielski, there is no fundamental difference between a traditional data center and a digital currency miner. [EX1009, 88 ("Industrial miners face almost the same issues as data centers: access to relatively cheap power, good network access, access to latest hardware, and stable political climate.")]. Further, unbeknownst to the Office, using flare gas to generate power to reduce greenhouse gas emission was known to the public well before the priority date of the '372 patent. [EX1005, Abstract, [0002]; EX1013, 2]. Thus, the '372 patent should not have been issued in the first place.

VII. CONCLUSION

Petitioner respectfully requests institution of the PGR and requests that the Board ultimately find the Challenged Claims unpatentable.

VIII. PAYMENT OF FEES

Petitioner authorizes charge of fees to Deposit Account 06-1050.

IX. MANDATORY NOTICES UNDER 37 C.F.R § 42.8(a)(1)

A. Real Party-In-Interest Under 37 C.F.R. § 42.8(b)(1)

Crusoe Energy Systems, LLC is the real party-in-interest.

B. Related Matters Under 37 C.F.R. § 42.8(b)(2)

The '372 Patent is the subject of the following civil action: *Upstream Data Inc. v. Crusoe Energy Systems LLC*, Case No. 1:23-cv-01252 (D. Colo. May 18, 2023). Petitioner is not aware of any disclaimers, reexamination certificates, other than the PGR petition.

A. Lead And Back-Up Counsel Under 37 C.F.R. § 42.8(b)(3)

Petitioner provides the following designation of counsel.

Lead Counsel	Backup counsel
John Phillips, Reg. No. 35,322 FISH & RICHARDSON P.C. 60 South Sixth Street, Suite 3200 Minneapolis, MN 55402 Tel: 858-678-5070 Fax: 877-769-7945 Email: PGR54598-0001PS1@fr.com	Jia Zhu, Limited Rec. No. L1372 FISH & RICHARDSON P.C. 60 South Sixth Street, Suite 3200 Minneapolis, MN 55402 Tel: 858-678-5070 Fax: 877-769-7945 Email: PGR54598-0001PS1@fr.com

B. Service Information

Please address all correspondence and service to the address listed above.

Petitioner consents to electronic service by email at PGR54598-0001PS1@fr.com.

Respectfully submitted,

Dated: July 20, 2023

/John C. Phillips/
John Phillips, Reg. No. 35,322
Jia Zhu, Limited Rec. No. L1372
FISH & RICHARDSON P.C.
60 South Sixth Street, Suite 3200
Minneapolis, MN 55402
Tel: 858-678-5070
Fax: 877-769-7945

(Control No.: PGR2023-00039)

Attorneys for Petitioner

CERTIFICATION UNDER 37 CFR § 42.24

Under the provisions of 37 CFR § 42.24(d), the undersigned hereby certifies that the word count for the foregoing Petition for Post Grant Review totals 18,626 words, which is less than the 18,700 allowed under 37 CFR § 42.24.

Dated: July 20, 2023

/John C. Phillips/
John Phillips, Reg. No. 35,322
Jia Zhu, Limited Rec. No. L1372
FISH & RICHARDSON P.C.
60 South Sixth Street, Suite 3200
Minneapolis, MN 55402
Tel: 858-678-5070
Fax: 877-769-7945

Attorneys for Petitioner

CERTIFICATE OF SERVICE

Pursuant to 37 CFR §§ 42.6(e)(4)(i) *et seq.* and 42.105(b), the undersigned certifies that on July 20, 2023, a complete and entire copy of this Petition for Post Grant Review and all supporting exhibits were provided via Federal Express, to the Patent Owner by serving the correspondence address of record as follows:

NISSEN PATENT LAW
#401, 11044 - 82 Ave. N.W.
Edmonton, AB T6G 0T2
CANADA
(703) 415-2559

/Crena Pacheco/

Crena Pacheco
Fish & Richardson P.C.
60 South Sixth Street, Suite 3200
Minneapolis, MN 55402
pacheco@fr.com