bk medical

User Guide
Type 8808e

Prostate Biplane Transducer

English
BB1856-D
June 2012

CE 0543
For Professional Users Only

Advance Medical Designs, Inc. - EX1007
Advance Medical Designs v. Corbin Clinical Resources, PGR2023-00041

BK MEDICAL
Mileparken 34
2730 Herlev
Denmark
Tel.:+45 4452 8100 / Fax:+45 4452 8199
www.bkmed.com
Email: info@bkmed.dk

The serial number of a BK Medical product contains information about the year of manufacture. To obtain the date of manufacture of a product, please contact your BK Medical representative or write to us at the email address above, including the product's serial number (SN number).

BK Medical Customer Satisfaction

Input from our customers helps us improve our products and services. As part of our customer satisfaction program, we contact a sample of our customers a few months after they receive their orders. If you receive an email message from us asking for your feedback, we hope you will be willing to answer some questions about your experience buying and using our products. Your opinions are important to us. You are of course always welcome to contact us via your BK Medical representative or by contacting us directly.

If you have comments about the user documentation, please write to us at the email address above. We would like to hear from you.

© 2012 BK Medical
Information in this document may be subject to change without notice.

Contents

Introduction 5
Indications for Use 5
General Information 5
Service and Repair 6
Caring for the Transducer. 6
Cleaning and Disinfection 6
Starting Imaging 7
Connecting the Transducer. 7
Changing Frequency. 7
Using a Transducer Cover 7
Using the Transducer Control Button. 8
Changing Orientation 8
Imaging with Type 8808e 8
Imaging Without Puncture or Biopsy 9
Puncture and Biopsy Facilities 9
For Transrectal Puncture 9
For Transperineal Puncture 12
Performing Puncture and Biopsy 13
Cleaning after Puncture and Biopsy 14
Disposal 14

Advance Medical Designs, Inc. - EX1007
Advance Medical Designs v. Corbin Clinical Resources, PGR2023-00041
Page 3 of 16

4

Introduction

This is the user guide for Prostate Biplane Transducer Type 8808e and must be used together with *Care, Cleaning & Safety* which contains important safety information.

Indications for Use

Prostate Biplane Transducer Type 8808e is designed for transrectal prostate imaging.

Figure 1. Prostate Biplane Transducer Type 8808e.

Imaging Plane

The transducer contains two convex arrays — one for transverse (T) imaging, and one for sagittal (S) imaging (see Figure 2). The advantage of being able to view two planes simultaneously with one transducer is that the true position of the needle can be seen during puncture and biopsy and a suspicious lesion can be viewed in both planes.

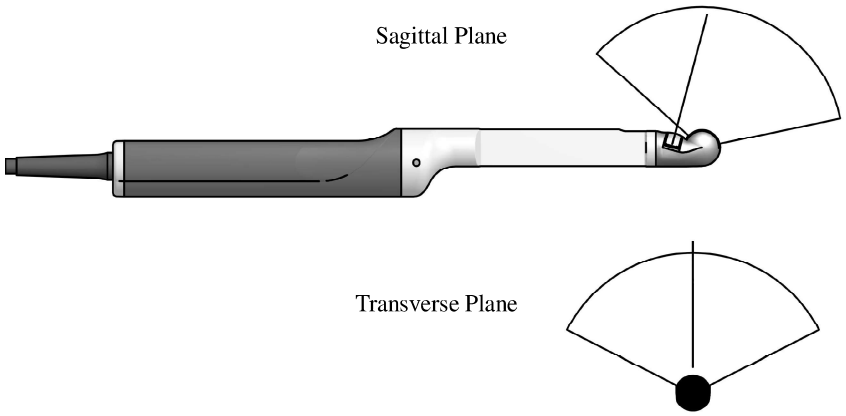

Figure 2. Imaging planes for Prostate Biplane Transducer Type 8808e.

General Information

Product specifications for this transducer can be found in the Product Data sheet that accompanies this user guide.

Acoustic output data and data about EMC (electromagnetic compatibility) for this transducer are in Technical Data (BZ2100) that accompanies this user guide. A full explanation of acoustic output data is given in your system user guide.

Advance Medical Designs, Inc. - EX1007
Advance Medical Designs v. Corbin Clinical Resources, PGR2023-00041
Page 5 of 16

WARNING

If at any time the system malfunctions, or the image is severely distorted or degraded, or you suspect in any way that the system is not functioning correctly:

- Remove all transducers from contact with the patient.
- Turn off the system. Unplug the system from the wall and make sure it cannot be used until it has been checked.
- Do not try to repair the system yourself.
- Contact your BK Medical representative or hospital technician.

WARNING

Always keep the exposure level (the acoustic output level and the exposure time) as low as possible.

Service and Repair

WARNING

Service and repair of BK Medical electromedical equipment must be carried out only by the manufacturer or its authorized representatives. BK Medical reserves the right to disclaim all responsibility, including but not limited to responsibility for the operating safety, reliability and performance of equipment serviced or repaired by other parties. After service or repairs have been carried out, a qualified electrical engineer or hospital technician should verify the safety of all equipment.

Caring for the Transducer

The transducer may be damaged during use or processing, so it must be checked before use for cracks or irregularities in the surface. It should also be checked thoroughly once a month following the procedure in *Care, Cleaning & Safety*.

Cleaning and Disinfection

To ensure the best results when using BK Medical equipment, it is important to maintain a strict cleaning routine.

Full details of cleaning and disinfection procedures can be found in *Care, Cleaning & Safety* that accompanies this user guide. A list of disinfectants and disinfection methods that the transducer can withstand are listed in the Product Data sheet.

Sterile covers are available. See the Product Data sheet for more information.

WARNING

Users of this equipment have an obligation and responsibility to provide the highest degree of infection control possible to patients, co-workers and themselves. To avoid cross contamination, follow all infection control policies for personnel and equipment established for your office, department, or hospital.

Advance Medical Designs, Inc. - EX1007
Advance Medical Designs v. Corbin Clinical Resources, PGR2023-00041
Page 6 of 16

Starting Imaging

All equipment must be cleaned and disinfected before use.

Connecting the Transducer

WARNING

Keep all plugs and sockets absolutely dry at all times.

The transducer is connected to the system using the array Transducer Socket on the system. To connect, the transducer plug's locking lever should first be in a horizontal position. Align the plug to the system socket and insert securely. Turn the locking lever clockwise to lock in place.

When connected, the transducer complies with Type BF requirements of EN60601-1 (IEC 60601-1).

Changing Frequency

The Multi-Frequency Imaging (MFI) facility enables you to select the imaging frequency. See the applicable system user guide for instructions. The selected frequency is displayed at the top of the screen.

Using a Transducer Cover

The transducer should be enclosed in a transducer cover or a standard condom. See the Product Data sheet for a list of available transducer covers.

WARNING

Because of reports of severe allergic reactions to medical devices containing latex (natural rubber), FDA is advising health-care professionals to identify their latex-sensitive patients and be prepared to treat allergic reactions promptly.

Apply sterile gel to the tip of the transducer or fill the cover with 1 to 2 ml of sterile water. This improves the screen images by preventing image artifacts caused by air bubbles.

Pull the transducer cover over the transducer.

Gel also creates a good acoustic contact between the skin and the transducer; therefore, apply a small amount to the outside of the cover prior to imaging. Re-apply the gel frequently to ensure good screen images.

WARNING

Use only water-soluble agents or gels. Petroleum or mineral oil-based materials may harm the cover materials.

Advance Medical Designs, Inc. - EX1007
Advance Medical Designs v. Corbin Clinical Resources, PGR2023-00041
Page 7 of 16

WARNING

Do not use excessive force during insertion. Do not make excessive lateral movements during or after insertion. Risk of injury or tissue damage to the patient could occur under certain circumstances. A digital palpation of the rectum may need to be carried out by a clinician prior to insertion or use of the probe as a precautionary measure.

Using the Transducer Control Button

To change the imaging plane, press the button corresponding to that plane (see Figure 1). Pressing the button activates (starts) or freezes (stops) imaging in that plane. One button enables the sagittal or longitudinal array. A second button enables the transverse array. Each time a button is pressed, a beep is emitted.

Changing Orientation

To change the orientation of the image on the monitor, refer to the applicable system user guide for instructions.

Imaging with Type 8808e

Simultaneous Biplane Imaging

8808e can transmit transverse (T) and sagittal (S) images simultaneously. When you press the system's **Split** key, simultaneous imaging is automatically activated.

Transverse or Sagittal Imaging

Click **Simultan** to toggle simultaneous imaging on or off. When simultaneous imaging is off, you can change which plane is active and which is frozen by pressing the **Split** key or by placing the cursor on the image you want to be active and pressing the **Select** key.

Advance Medical Designs, Inc. - EX1007
Advance Medical Designs v. Corbin Clinical Resources, PGR2023-00041
Page 8 of 16

Imaging Without Puncture or Biopsy

When 8808e is used for transrectal imaging without the puncture facilities, the dummy bracket UA1325 must be in place. This clicks into position on the transducer to cover the open channel (see Figure 3).

Figure 3. Type 8808e and the dummy channel bracket UA1325.

Note: *The dummy bracket must be removed before 8808e is prepared for disinfection. The bracket can be disinfected using the same methods as explained later under UA1326.*

Puncture and Biopsy Facilities

Transrectal and transperineal puncture and biopsy are possible with 8808e. The following pages illustrate the various transrectal and transperineal puncture accessories available and briefly describe usage and operating instructions. The transducer has an open channel into which the appropriate puncture accessories fit when the dummy channel bracket (UA1325) has been removed (see Figure 3).

WARNING

It is essential for the patient's safety that only the correct puncture attachments, as described in this guide, are used. Never use unauthorized combinations of transducers and puncture attachments or other manufacturers' puncture attachments.

For Transrectal Puncture

With 8808e, you can perform transrectal puncture and biopsy by imaging in simultaneous biplane (imaging in both the transverse and sagittal planes).

The biopsy guide is available in both a non-sterile reusable version (light green) and a sterile-packed single-use version (dark green).

Non-sterile biopsy guides (light green)

The dummy channel bracket UA1325 and the reusable biopsy guide (UA1326) are non-sterile when supplied and must be disinfected by immersion in a suitable solution and autoclaved. The dummy channel bracket and reusable biopsy guide may be damaged during use or processing, so they must be checked before use for cracks or irregularities in the surface. They should also be checked thoroughly once a month following the procedure in *Care, Cleaning & Safety.*

Advance Medical Designs, Inc. - EX1007
Advance Medical Designs v. Corbin Clinical Resources, PGR2023-00041
Page 9 of 16

Sterile biopsy guides (dark green)

The sterile single-use biopsy guide UA1322-S and UA1322-S14 come assembled in peel packs. Contents are only sterile if the package is intact.

WARNING

Disposable components are packaged sterile and are intended for single-use only.

Do not use if:

- Integrity of packaging is violated
- Expiration date has passed
- Package label is missing

The sterile-packed biopsy guides must be stored at a temperature range from +15 °C (+57 °F) to +25 °C (+77 °F) and at a storage humidity of 30% to 80%.

WARNING

Sterile-packed components must be stored in a safe environment and kept out of direct sunlight. Large temperature changes during storage may cause condensation and violate the integrity of the packaging.

Please refer to *Care, Cleaning and Safety* for an example of how to open a sterile-packed product.

Simultaneous Biplane

The sterile biopsy guide UA1322-S, UA1322-S14 and reusable biopsy guide UA1326 are used for simultaneous biplane imaging.

Figure 4. Reusable biopsy guide UA1326.

Advance Medical Designs, Inc. - EX1007
Advance Medical Designs v. Corbin Clinical Resources, PGR2023-00041
Page 10 of 16

The puncture line for UA1322-S, UA1322-S14 and UA1326 on 8808e is shown in Figure 5. UA1322-S and UA1326 have a bore diameter of 1.6 mm, suitable for 17-gauge needles. UA1322-S14 has a bore diameter of 2.1 mm, suitable for 14-gauge needles.The puncture line is angled at 19° to the transducer's axis.

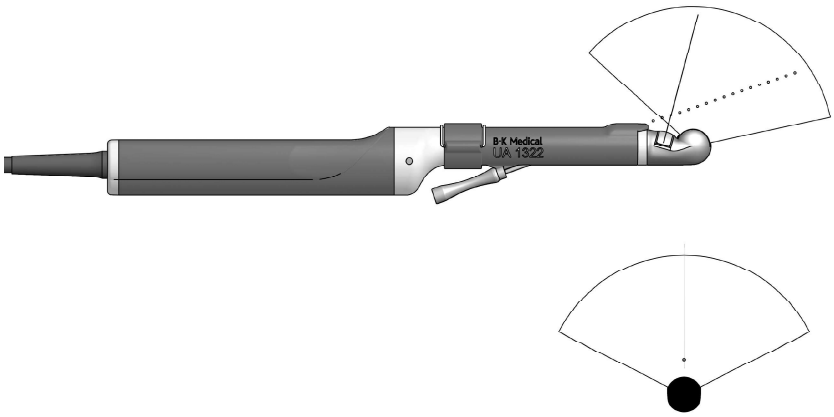

Figure 5. Illustration of the puncture line for biopsy guide UA1322-S, UA1322-S14 and UA1326.

Mounting a Transrectal Biopsy Guide

To mount a biopsy guide on 8808e:

1. If a dummy channel bracket is mounted on the transducer, remove it.
2. Pull a transducer cover or a standard condom containing a suitable amount of imaging gel over the transducer.
3. Slide the needle guide into the biopsy channel bracket.

WARNING

Do not use excessive force when inserting the needle guide.

4. Insert the assembled needle guide and biopsy channel bracket into the open channel on the transducer. A small nodule on the end of the channel bracket fits into an indentation in the channel on the transducer to help you place the bracket correctly. Click the channel bracket into position on the transducer and lock it into place (see Figure 6).

Figure 6. Biopsy channel bracket and needle guide mounted on 8808e.

WARNING

Ensure that the channel bracket and needle guide are correctly positioned. Never insert the needle guide while the transducer is inside the patient.

Advance Medical Designs, Inc. - EX1007
Advance Medical Designs v. Corbin Clinical Resources, PGR2023-00041
Page 11 of 16

To remove the bracket, remove the outer condom, open the lock and lift the bracket off the transducer.

For Transperineal Puncture

The metal puncture attachment UA1324, shown in Figure 7, is designed for transperineal puncture and biopsy. When UA1324 is being used, the dummy channel bracket UA1325 (shown in Figure 3) must be in place.

Puncture attachment UA1324 must be autoclaved or disinfected by immersion in a suitable solution.

UA1324 consists of a needle guide and a mounting ring with clamp. The needle guide comprises 9 parallel guide channels, spaced 5mm apart, each with an internal diameter of 2.1mm, suitable for a 14-gauge needle. The guide is parallel to the centerline of the transducer.

Note: *The needle guide can be adjusted 70 mm lengthwise with respect to the mounting ring, using the adjustment screw.*

Figure 7. Puncture attachment UA1324.

Mounting the Transperineal Puncture Attachment

To mount the transperineal puncture attachment, ensure that the dummy channel bracket UA1325 is in place. Pull a sterile transducer cover over the transducer. Loosen the clamp on UA1324, and slide the attachment over the tip of the transducer until it meets the steel stud on the side of the transducer. The puncture attachment should be correctly positioned so that the groove slides easily over stud. No force should be used when attaching the puncture attachment to the transducer.

Figure 8. Puncture attachment UA1324 mounted on 8808e.

Advance Medical Designs, Inc. - EX1007
Advance Medical Designs v. Corbin Clinical Resources, PGR2023-00041
Page 12 of 16

The puncture lines for UA1324 on 8808e are shown in Figure 9.

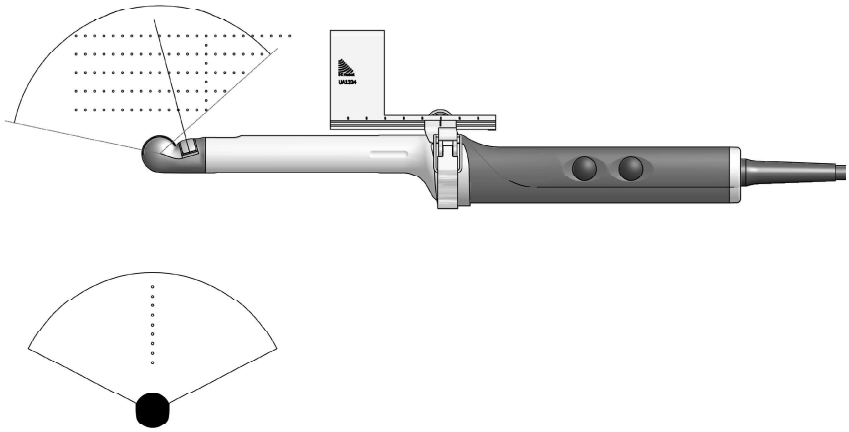

Figure 9. Illustration of the puncture line for puncture attachment UA1324.

Performing Puncture and Biopsy

WARNING

It is essential for the patient's safety that only the correct puncture attachments, as described in this guide, are used. Never use unauthorized combinations of transducers and puncture attachments or other manufacturers puncture attachments.

Before beginning a puncture or biopsy procedure, always check that the type number of the transducer and the type number or description of the puncture attachment match exactly those displayed on the system monitor.

WARNING

The puncture line on the image is an indication of the expected needle path. The needle tip echo should be monitored at all times so any deviation from the desired path can be corrected.

If not sterilized, cover the transducer with a sterile transducer cover.

If the transducer cover is damaged when attaching the puncture attachment, replace it with a new cover.

See the Product Data sheet for a list of available transducer covers.

Superimpose puncture line

Press the system **Puncture** or **Biopsy** control button to superimpose a puncture line on the image.

If more than one puncture line is available, refer to the applicable system user guide for instructions on how to change which one appears.

Move the transducer until the puncture line transects the target. Insert the needle and monitor it as it moves along the puncture line to the target. The needle tip echo will be seen as a bright dot on the screen.

The puncture line will differ depending on the imaging plane orientation. In the sagittal plane, the puncture path is indicated by a line of dots. The distance between each puncture dot is 5mm.

Advance Medical Designs, Inc. - EX1007
Advance Medical Designs v. Corbin Clinical Resources, PGR2023-00041
Page 13 of 16

In the transverse plane, a single dot indicates the point at which the needle will transect the imaging plane.

WARNING

If the needle guide is detached from the transducer during interventional procedures, cover the transducer with a new transducer cover.

If the cover is damaged during interventional procedures, follow the policies of the hospital or clinic for treatment of the patient under such circumstances.

To remove the puncture line from the scan image, refer to the applicable system user guide for instructions.

WARNING

When performing a biopsy, always make sure that the needle is fully drawn back inside the needle guide before moving the probe.

Cleaning after Puncture and Biopsy

If biological materials are allowed to dry on the transducer, disinfection and sterilization processes may not be effective. Therefore, you must clean transducers immediately after use.

Use a suitable brush to make sure that biological material and gel are removed from all channels and grooves. See *Care, Cleaning & Safety* for cleaning instructions.

Disposal

When the transducer is scrapped at the end of its life, national rules for the relevant material in each individual land must be followed. Within the EU, when you discard the transducer, you must send it to appropriate facilities for recovery and recycling. See the applicable system user guide for further details.

WARNING

For contaminated disposals such as transducer covers or needle guides, follow disposal control policies established for your office, department or hospital.

Advance Medical Designs, Inc. - EX1007
Advance Medical Designs v. Corbin Clinical Resources, PGR2023-00041
Page 14 of 16

LEGAL MANUFACTURER : BK Medical ApS, Mileparken 34, 2730 Herlev, Denmark. Tel.: +45 44528100 Fax: +45 44528199 Email: info@bkmed.dk

Innovative Solutions for Life

Analogic Corporation creates innovative technology to improve the health and ensure the safety of people around the world. We are committed to providing ultrasound solutions under the BK Medical brand name that advance medicine and save lives.

Analogic Corporation - Headquarters USA
8 Centennial Drive, Peabody, MA 01960
T. 978-326-4000
analogic.com

BK Medical - Sales and Service USA
8 Centennial Drive, Peabody, MA 01960
T. 978-326-1300
bkmed.com

BK Medical - Europe and Rest of World
Mileparken 34, DK-2730, Herlev, Denmark
T: +45 4452 8100
F: +45 4452 8199
bkmed.com

The name Analogic is a registered trademark of Analogic Corporation. The globe logo is a trademark of Analogic Corporation.