UNITED STATES DISTRICT COURT
NORTHERN DISTRICT OF GEORGIA
ATLANTA DIVISION

ADVANCE MEDICAL DESIGNS, INC., Plaintiff, vs. CORBIN CLINICAL RESOURCES, LLC, Defendant.	Case No. **Jury Trial Demanded**

COMPLAINT FOR DECLARATORY JUDGMENT OF PATENT NONINFRINGEMENT, INVALIDITY, AND VIOLATION OF GEORGIA LAW

Plaintiff Advance Medical Designs, Inc. ("Advance Medical" or "Plaintiff") files this Complaint for Declaratory Judgment of Patent Noninfringement, Invalidity, and violations of Georgia law against Defendant Corbin Clinical Resources, LLC ("Corbin"), and in support of its Complaint alleges as follows:

Nature and Basis of Action

1. This is an action arising under the Declaratory Judgment Act, 28 U.S.C. §§ 2201 and 2202, the United States Patent Act, 35 U.S.C. § 1 *et seq.*, and the Georgia Bad Faith Patent Assertion Act, O.C.G.A. § 10-1-770 *et seq*.

2. Advance Medical seeks declarations and findings that: (i) it and its customers making, using, or selling Advance Medical's SureFire product does not infringe any valid claim of U.S. Patent No. 10,064,681 ("the '681 Patent" or the

Corbin Clinical Resources, LLC, EX2001
Advance Medical Designs, Inc. v. Corbin Clinical Resources, LLC
PGR2023-00041

"Patent-in-Suit"); (ii) each of the claims of the Patent-in-Suit are invalid pursuant to 35 U.S.C. §§ 101, 102, 103 and/or 112; and (iii) Corbin has violated O.C.G.A. §§ 10-1-770 *et seq*., entitling Advance Medical to an injunction, general and punitive damages, and the recovery of attorneys' fees and costs. A true and correct copy of the '681 Patent is attached hereto as Exhibit A.

The Parties

3. Plaintiff Advance Medical is a Georgia Corporation with a principal place of business located at 1120 Atlanta Industrial Dr., Marietta, GA 30066.

4. On information and belief, Defendant Corbin is a Maryland limited liability company with its principal place of business at 110 Luterman Rd., Cumberland, MD 21502.

5. On information and belief, Corbin is the owner of all intellectual property rights associated with the '681 Patent, as confirmed by the demand letters sent by Corbin to Advance Medical.

Jurisdiction and Venue

6. This Court has subject matter jurisdiction under 38 U.S.C. §§ 2201, 2202, 1331 and/or 1338(a), because this action arises under the laws of the United States, in particular the Patent Act of the United States, 35 U.S.C. § 100 *et seq*. and seeks relief under the Federal Declaratory Judgment Act.

7. This Court has supplemental jurisdiction over the state law claim under 38 U.S.C. § 1367 because it is so related to the federal claims that they form part of the same case or controversy.

8. This Court has personal jurisdiction over Corbin. Corbin purposefully directed its conduct at this forum including by sending letters and electronic communication to Advance Medical in this District.

9. Venue is proper in the Northern District of Georgia under 38 U.S.C. § 1391(b) and/or § 1400(a) because a substantial part of the events or omissions giving rise to the claims occurred in the District and because this Court has personal jurisdiction over Corbin.

The SureFire Product

10. Advance Medical's SureFire Product is a transperineal needle guide for a transrectal ultrasound probe. The SureFire Product includes a clamp for mounting the product to a transrectal ultrasound probe and a needle plate with a plurality of channels for receiving a needle at different heights relative to the transrectal probe. The position of the needle plate along the transrectal probe is adjustable.

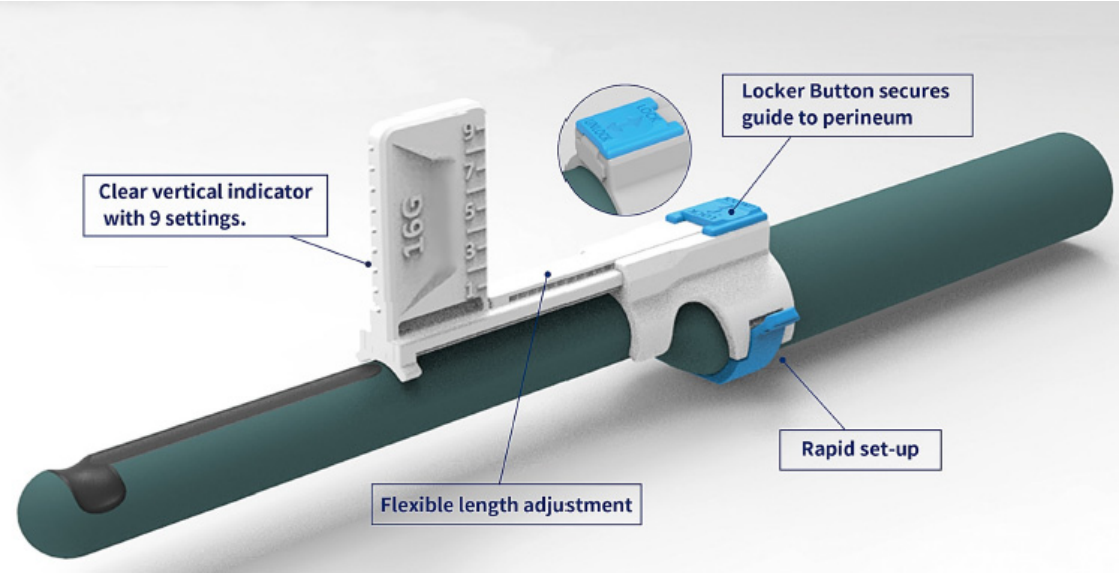

11. In use, the SureFire product is secured onto the ultrasound probe, the ultrasound probe is inserted into the rectum of the patient. Once the ultrasound probe is in position, the needle plate is adjusted horizontally to the correct position and then locked in place. Once the needle plate is locked into position, the needle is inserted through the channel in the needle plate that corresponds with the target as determined by the ultrasound.

12. The needle plate is not configured to slide while the needle is being inserted into one of the plurality of guide channels.

Advance Medical's Interactions with Corbin

13. On or about August 12, 2020, counsel representing Corbin sent a letter to Advance Medical stating that it had recently become aware of Advance Medical's SureFire Product. The August 12, 2020 letter attached a copy of the '681 Patent and alleged that the SureFire product infringes the '681 Patent.

14. While the August 12, 2020 letter stated that the SureFire Product "incorporates all of the features of the '681 Patent, including the upper mount, the lower mount, a platform configured to support an access needle, and a pair of stabilization

bars that enable the platform to move longitudinally along the length of the transrectal probe" the letter did not indicate what features of the SureFire product corresponded to each of these limitations in the '681 Patent claims. The August 12, 2020 letter did not include a claim chart or annotated figure mapping the elements of any claim of the '681 Patent to the SureFire Product.

15. The August 12, 2020 letter demanded that Advance Medical "cease and desist making, using, selling, offering to sell, or importing" the SureFire product within 10 days or Corbin would seek legal action. A copy of the August 12, 2020 letter is attached hereto as Exhibit B.

16. In October of 2020, Advance Medical responded to Corbin's letter. In its response, Advance Medical illustrated that the SureFire Product did not infringe any claim of the '681 Patent, especially in view of the '681 Patent's prosecution history. A copy of Advance Medical's response to Corbin's August 12, 2020 letter is attached as Exhibit C.

17. On or around December 7, 2020, Corbin send a reply letter to Advance Medical's response. In the December 7, 2020 letter, Corbin took an internally inconsistent position regarding the relevance of whether the '681 Patent claims require the "platform configured to slide . . . so as to displace the access needle" to be slidable **when the needle is inserted** into the device. Advance Medical illustrated Corbin's internal inconsistency in a sur-reply letter dated January 14, 2021. The December 7,

2020 letter is attached hereto as Exhibit D and the January 14, 2021 letter is attached hereto as Exhibit E.

18. Corbin did not contact Advance Medical regarding the ’681 Patent after February 2021.

19. On or around September 30, 2021, Advance Medical received correspondence from counsel for Corbin in the Netherlands regarding European Patent No. 3,125,811 (“the ’811 Patent”). In the September 30, 2021 letter, Corbin alleges that the SureFire product infringes the ’811 Patent. The ’811 Patent is substantially similar to the ’681 Patent. Like Corbin’s August 12, 2020 letter regarding the ’681 Patent, the September 30, 2021 letter contained no analysis mapping the claims of the ’811 Patent to the SureFire Product. A copy of the September 30, 2021 letter is attached hereto as Exhibit F.

20. Corbin’s demand letters and threats create an actual case or controversy as to whether Advance Medical infringes any valid claim of the ’681 Patent.

21. Corbin’s demand letters and threats show that there is a substantial controversy between the parties having adverse legal interest of sufficient immediacy and reality to warrant the issuance of a declaratory judgment.

/ / /

The Prior Art

22. Other products incorporating an adjustable needle plate with a plurality of needle guide channels existed prior to the priority date of the ’681 Patent. The references described below are referred to collectively as “the Prior Art.”

23. The earliest claimed priority date of the ’681 Patent is April 3, 2014.

24. The BK Medical UA1324, pictured below, was on sale at least as early as 2010. Therefore, the BK Medical UA1324 is prior art to the ’681 Patent.

Perineal Puncture guide UA1324

- Weight: 125g
- Dimensions: 101 x 95 x 50mm
- Material: stainless steel AISI303

25. The BK Medical UA1324 has a similar mount, platform configured to support an access needle, and stabilization bar that enables the platform to move longitudinally along the length of the transrectal probe as the SureFire Product. Therefore, if the SureFire Product infringes any claim of the ’681 Patent, the BK Medical US1324 invalidates it.

26. US Patent No. 6,443,902 claims priority to a PCT application filed on January 5, 1999. US Patent No. 6,443,902 depicts and describes a puncture guide similar to the BK Medical UA1324 and the SureFire Product and it is prior art to the ’681 Patent. Therefore, US Patent No. 6,443,902 likewise invalidates the ’681 Patent.

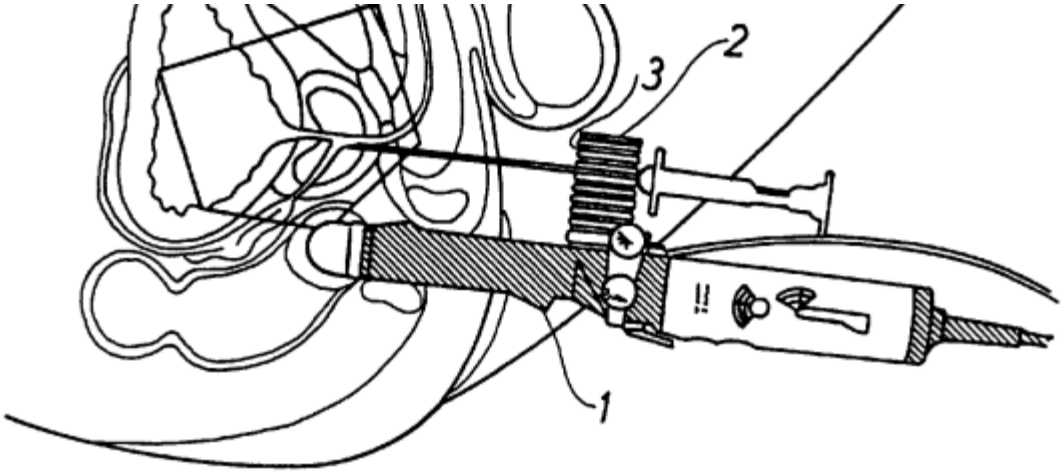

Fig. 1

27. US Patent Pub. No. US 2014/0207168 describes and depicts a puncture apparatus having a guiding member 3 “configured to be movable with respect to the interlocking member.” The guiding member 3 of US Patent Pub. No US 2014/020718

would be obvious to combine with references such as the BK Medical UA1324 or US Patent No. 6,443,902 to render obvious the claims of the ’681 Patent.

COUNT I
Declaratory Judgment of Non-Infringement

28. Plaintiff reincorporates and realleges the allegations of all preceding paragraphs as if fully set forth herein.

29. Corbin has asserted that Advance Medical infringes the Patent-in-Suit by selling and offering for sale the SureFire Product.

30. The SureFire Product does not infringe any valid claim of the Patent-in-Suit because it does not satisfy all limitations of the claims of the Patent-in-Suit.

31. Claim 1 of the ’681 Patent requires “an upper mount and a lower mount configured to couple to each other, the lower mount configured to engage the transrectal probe and secure the upper mount relative to the transrectal probe.” The SureFire Product does not meet this limitation either in its plain and ordinary meaning or the meaning ascribed to this language during prosecution of the ’681 Patent.

32. Claim 1 of the ’681 Patent requires a “platform configured to slide on the pair of stabilization bars along at least a portion of the length so as to displace the access needle along the at least a portion of the length.” Claim 19 similarly requires a “platform configured to slide along at least a portion of the length of the pair of stabilization bars so as to displace the access needle along the at least a portion of the

length." The SureFire Product does not meet this limitation either in its plain and ordinary meaning or the meaning ascribed to this language during prosecution of the '681 Patent.

33. Claim 19 of the '681 Patent requires that "the platform configured to support the access needle" be "in a central position between the pair of stabilization bars." Absent any indication in the '681 specification or file history that the term "between" should be afforded anything other than its plain and ordinary meaning, the SureFire Product does not meet this limitation.

34. Based on Corbin's demand letters and threats against Advance Medical, an actual case or controversy exists as to whether Advance Medical infringes any valid or enforceable claim of the Patent-in-Suit, and Advance Medical is entitled to a declaration that it does not infringe any valid claim of the Patent-in-Suit.

COUNT II
Declaratory Judgment of Invalidity

35. Plaintiff reincorporates and realleges the allegations of all preceding paragraphs as if fully set forth herein.

36. One or more of the claims of the Patent-in-Suit are invalid under the United States Patent Act, 35 U.S.C. § 1 *et seq*., including 35 U.S.C. §§ 101, 102, 103, and/or 112.

37. One or more claims of the Patent-in-Suit are invalid pursuant to 35 U.S.C. § 102 and/or § 103 because they are barred, anticipated, and/or rendered obvious by the Prior Art, including offers for sale made more than one year before the actual or effective filing date of the Patent-in-Suit.

38. Based on Corbin's demand letters and threats against Advance Medical, an actual case or controversy exists as to whether Advance Medical infringes any valid or enforceable claim of the Patent-in-Suit, and Advance Medical is entitled to a declaration that the Patent-in-Suit is invalid.

COUNT III
Violation of Georgia Bad Faith Patent Assertion Act, O.C.G.A. § 10-1-770

39. Plaintiff reincorporates and realleges the allegations of all preceding paragraphs as if fully set forth herein.

40. Upon information and belief, Corbin has made a bad faith assertion of patent infringement against Advance Medical based on its sale of and offers to sell Advance Medical's SureFire Product.

41. Upon information and belief, Corbin failed to conduct an adequate infringement analysis prior to asserting patent infringement claims against Advance Medical. Specifically, Corbin did not conduct a meaningful analysis comparing the claims of the '681 Patent to Advance Medical's SureFire Product in connection with, *inter alia*, whether the SureFire product includes a "platform configured to slide on a

pair of stabilization bars along at least a portion of the length so as to displace the access needle along the at least a portion of the length." Further, even if such an analysis had been conducted, details concerning that analysis have not been provided to Advance Medical.

42. On information and belief, Advance Medical knew or should have known that the '681 Patent, if it reads on the SureFire Product, is invalid. As Advance Medical has informed Corbin, Corbin's assertions of patent infringement against the SureFire product are contrary to the arguments that Corbin made to overcome rejections of the '681 Patent claims in view of U.S. Patent No. 5,494,094 to Onik *et al*. ("Onik"). Nevertheless, Corbin continued to make the same assertions of patent infringement against Advance Medical.

43. On information and belief, Corbin's assertions of patent infringement against Advance Medical are meritless, made in bad faith, and Corbin knew, or should have known that its assertions are meritless.

44. Upon information and belief, Corbin's actions constitute a bad faith assertion of patent infringement in violation of O.C.G.A § 10-1-770 *et seq*.

45. Based on Corbin's unlawful conduct, Advance Medical has suffered injury to its business and its reputation, thereby entitling it to an injunction and the recovery of its damages, including punitive damages and attorneys' fees.

PRAYER FOR RELIEF

WHEREFORE, Advance Medical respectfully requests the following relief:

a. A declaratory judgment that Advance Medical's products do not infringe the '681 Patent;

b. A declaratory judgment that the '681 Patent is invalid;

c. A permanent injunction restraining and enjoining Corbin from further interference with Advance Medical's business relationships;

d. A declaration that this is an exceptional case pursuant to 35 U.S.C. § 285;

e. An award to Advance Medical of its costs, expenses, and fees, including reasonable attorneys' fees, in this action; and

f. Such other relief as this Court may deep just, equitable, and proper.

DEMAND FOR JURY TRIAL

Plaintiff demands a trial by jury on all claims and issues triable to a jury.

/ / /

Dated this 22nd day of October, 2021.

LEE & HAYES, P.C.

s/ *Ryan P. Gentes*

Ryan P. Gentes
GA Bar No. 421695
William B. Dyer III
GA Bar No. 236915
LEE & HAYES, P.C.
75 14th Street NE, Suite 2500
Atlanta, GA 30309
Telephone: (404) 815-1900
Email: ryan.gentes@leehayes.com
Email: bill.dyer@leehayes.com

Attorneys for Plaintiff
Advance Medical Designs, Inc.