US010024049B2

(12) **United States Patent**
Brekke et al.

(10) **Patent No.: US 10,024,049 B2**
(45) **Date of Patent: Jul. 17, 2018**

(54) **HANGER FOR FIRE SEPARATION WALL**

(71) Applicant: **Columbia Insurance Company**, Omaha, NE (US)

(72) Inventors: **Steven Brekke**, Lakeville, MN (US); **Mark R. Rolf**, Fredericksburg, VA (US)

(73) Assignee: **Columbia Insurance Company**, Omaha, NE (US)

(*) Notice: Subject to any disclaimer, the term of this patent is extended or adjusted under 35 U.S.C. 154(b) by 43 days.

(21) Appl. No.: **14/555,049**

(22) Filed: **Nov. 26, 2014**

(65) **Prior Publication Data**

US 2015/0184370 A1 Jul. 2, 2015

Related U.S. Application Data

(60) Provisional application No. 61/922,531, filed on Dec. 31, 2013.

(51) **Int. Cl.**
E04B 1/26 (2006.01)
E04B 1/38 (2006.01)

(52) **U.S. Cl.**
CPC ***E04B 1/2612*** (2013.01)

(58) **Field of Classification Search**
CPC E04B 1/2612; E04B 2001/2644; E04B 2001/2652; E04B 2001/2676; B21D 53/56
USPC 403/230, 231, 232.1; 52/708, 702, 289; 248/300
See application file for complete search history.

(56) **References Cited**

U.S. PATENT DOCUMENTS

414,169 A * 10/1889 Reuschel E04B 1/2612 248/300
478,163 A * 7/1892 Lehman F16B 7/0446 29/897.3
537,504 A * 4/1895 Van Dorn F16B 7/0446 403/190
546,147 A * 9/1895 Gregg E04B 1/2612 182/87
598,135 A * 2/1898 Butz E04B 1/2612 403/232.1
625,427 A * 5/1899 Stewart et al. F16B 7/0446 182/87

(Continued)

FOREIGN PATENT DOCUMENTS

WO 2012060863 A2 5/2012
WO 2013126987 A1 9/2013

OTHER PUBLICATIONS

Installer's Pocket Guide, Simpson Strong-Tie Company Inc. (2009), 60 pages.

(Continued)

Primary Examiner — Joshua J Michener
Assistant Examiner — Keith Minter
(74) *Attorney, Agent, or Firm* — Senniger Powers LLP

(57) **ABSTRACT**

A hanger for connecting a structural component to a wall that can have sheathing mounted thereon either before or after the hanger is connected to the wall. The hanger includes a channel-shaped portion configured to receive the structural component. An extension portion extends from the channel-shaped portion and is configured to extend through the sheathing to engage the wall at a first location. A connection portion is configured for attachment to the wall at a second location spaced from the first location.

13 Claims, 43 Drawing Sheets

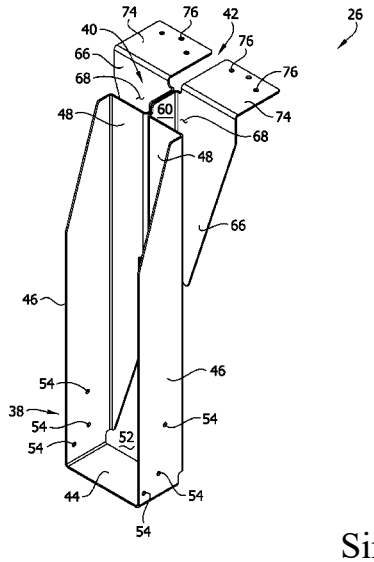

(56) **References Cited**

U.S. PATENT DOCUMENTS

666,918 A * 1/1901 Butz F16B 7/0446 248/300
717,316 A * 12/1902 Avery A47C 23/062 248/239
753,053 A * 2/1904 Eberhardt F16B 7/0446 403/190
770,050 A * 9/1904 Dreyer F16B 7/0446 248/300
783,807 A * 2/1905 Tuteur E04B 1/2612 403/232.1
796,433 A * 8/1905 Kahn F16B 7/0446 182/87
804,451 A * 11/1905 Carlson E04B 1/2612 403/190
828,488 A * 8/1906 Lanz B21D 53/00 29/897.3
874,514 A * 12/1907 Lindow F16B 7/0446 403/190
922,215 A * 5/1909 Tuteur F16B 7/0446 403/190
924,842 A * 6/1909 Seipp F16B 7/0446 403/190
943,847 A * 12/1909 Seipp F16B 7/0446 403/190
1,406,723 A * 2/1922 Caldwell E04B 1/2608 403/232.1
1,728,981 A * 9/1929 Ropp E04B 1/2612 52/702
3,125,785 A * 3/1964 Conville E04B 2/80 52/238.1
3,907,445 A * 9/1975 Wendt E04B 1/2612 403/191
3,945,741 A * 3/1976 Wendt E04B 1/5818 403/191
3,972,169 A 8/1976 Sheppard, Jr.
4,005,942 A 2/1977 Gilb
4,198,175 A * 4/1980 Knepp F16B 15/0046 403/191
4,223,866 A * 9/1980 Black E04G 17/18 249/211
4,230,416 A * 10/1980 Gilb E04B 1/2612 248/300
4,261,155 A * 4/1981 Gilb E04B 1/2612 248/282.1
4,353,664 A * 10/1982 Gilb E04B 1/2612 403/232.1
4,411,548 A * 10/1983 Tschan E04B 1/2612 403/232.1
4,422,792 A * 12/1983 Gilb E04B 1/2612 403/232.1
4,472,916 A * 9/1984 Krebs E04B 1/18 403/174
4,560,301 A * 12/1985 Gilb B21D 53/38 403/232.1
4,584,813 A * 4/1986 Hudson E04B 1/2612 248/214
4,594,017 A * 6/1986 Hills E04B 1/2612 403/232.1
4,665,672 A * 5/1987 Commins E04B 1/0007 403/190
4,920,725 A * 5/1990 Gore E04B 1/2612 403/232.1
5,104,252 A * 4/1992 Colonias E04B 1/2612 403/230
5,111,632 A 5/1992 Turner
5,160,211 A * 11/1992 Gilb E04F 11/181 256/65.02
5,230,198 A * 7/1993 Callies E04B 1/2608 403/232.1
5,249,404 A * 10/1993 Leek E04B 1/0007 182/87
5,341,619 A * 8/1994 Dunagan E04B 1/2612 248/300
5,457,928 A * 10/1995 Sahnazarian E04B 1/2612 403/232.1
5,555,694 A * 9/1996 Commins E04B 1/2612 248/300
5,564,248 A * 10/1996 Callies E04B 1/2612 403/232.1
5,603,580 A * 2/1997 Leek E04B 1/2612 403/168
5,697,725 A * 12/1997 Ballash E04B 1/2608 403/231
5,797,694 A * 8/1998 Breivik E04B 1/2608 403/231
5,896,721 A * 4/1999 Sugiyama E04B 1/2604 403/232.1
6,131,358 A * 10/2000 Wise E04B 1/2612 52/289
6,230,466 B1 5/2001 Pryor
6,463,711 B1 * 10/2002 Callies E04B 1/2612 403/232.1
6,877,291 B2 * 4/2005 Shamroukh E04B 7/022 403/232.1
7,316,098 B1 1/2008 Sackett
7,707,785 B2 * 5/2010 Lin E04B 7/045 52/289
7,971,410 B2 * 7/2011 Jerke E04H 9/14 52/702
8,387,333 B2 3/2013 Brekke
8,677,718 B2 3/2014 Marshall
8,720,155 B1 5/2014 Robell
9,206,594 B1 * 12/2015 Grevious F16B 5/0614
2002/0078656 A1 * 6/2002 Leek E04B 1/2612 52/702
2004/0096269 A1 * 5/2004 Shahnazarian E04B 1/2612 403/232.1
2004/0129845 A1 * 7/2004 Whale E04B 1/2612 248/201
2005/0120669 A1 6/2005 Harrison
2006/0081743 A1 4/2006 Evans et al.
2006/0156682 A1 7/2006 McAndrew et al.
2006/0191233 A1 8/2006 Tamlyn
2007/0119108 A1 * 5/2007 Downard E04B 1/2604 52/289
2007/0294979 A1 12/2007 Lin et al.
2008/0101855 A1 * 5/2008 Lin E04B 1/2612 403/232.1
2008/0237421 A1 10/2008 Szpotowski
2009/0113839 A1 5/2009 Carr
2010/0031601 A1 2/2010 Lin
2011/0146173 A1 6/2011 Visser
2012/0222382 A1 * 9/2012 Brekke E04B 1/2612 52/702
2012/0297724 A1 11/2012 Pope et al.
2013/0067850 A1 3/2013 Sasanecki
2013/0232758 A1 * 9/2013 Pond F16B 17/00 29/428
2014/0338282 A1 11/2014 Sidhu
2015/0167291 A1 * 6/2015 Bundy E04B 1/2612 52/702
2015/0218832 A1 8/2015 Peters et al.
2017/0321418 A1 * 11/2017 Tremblay E04B 1/944

OTHER PUBLICATIONS

Top-Flange Joist Hangers Installed on Walls Over Wood Structural Panel Sheathing or Drywall, Technical Bulletin, Simpson Strong-Tie Company, Inc. (2013), 2 pages.
S/LBV / S/B and S/BA Hangers, Simpson Strong-Tie Company Inc. (2010), 1 page.
Cold-Formed Steel Connectors for Residential and Mid-Rise Construction (C-CFS10), Simpson Strong-Tie Company Inc. (2010), 76 pages.
Wood Construction Connectors Catalog 2013-2014 (C-2013), Simpson Strong-Tie Company Inc., 236 pages.

(56) **References Cited**

OTHER PUBLICATIONS

Office action dated Oct. 26, 2017, U.S. Appl. No. 15/230,926, filed Aug. 8, 2016, 14 pages.
Non-Final Office action, U.S. Appl. No. 15/675,409, dated Jan. 12, 2018, 20 pages.

* cited by examiner

FIG. 1

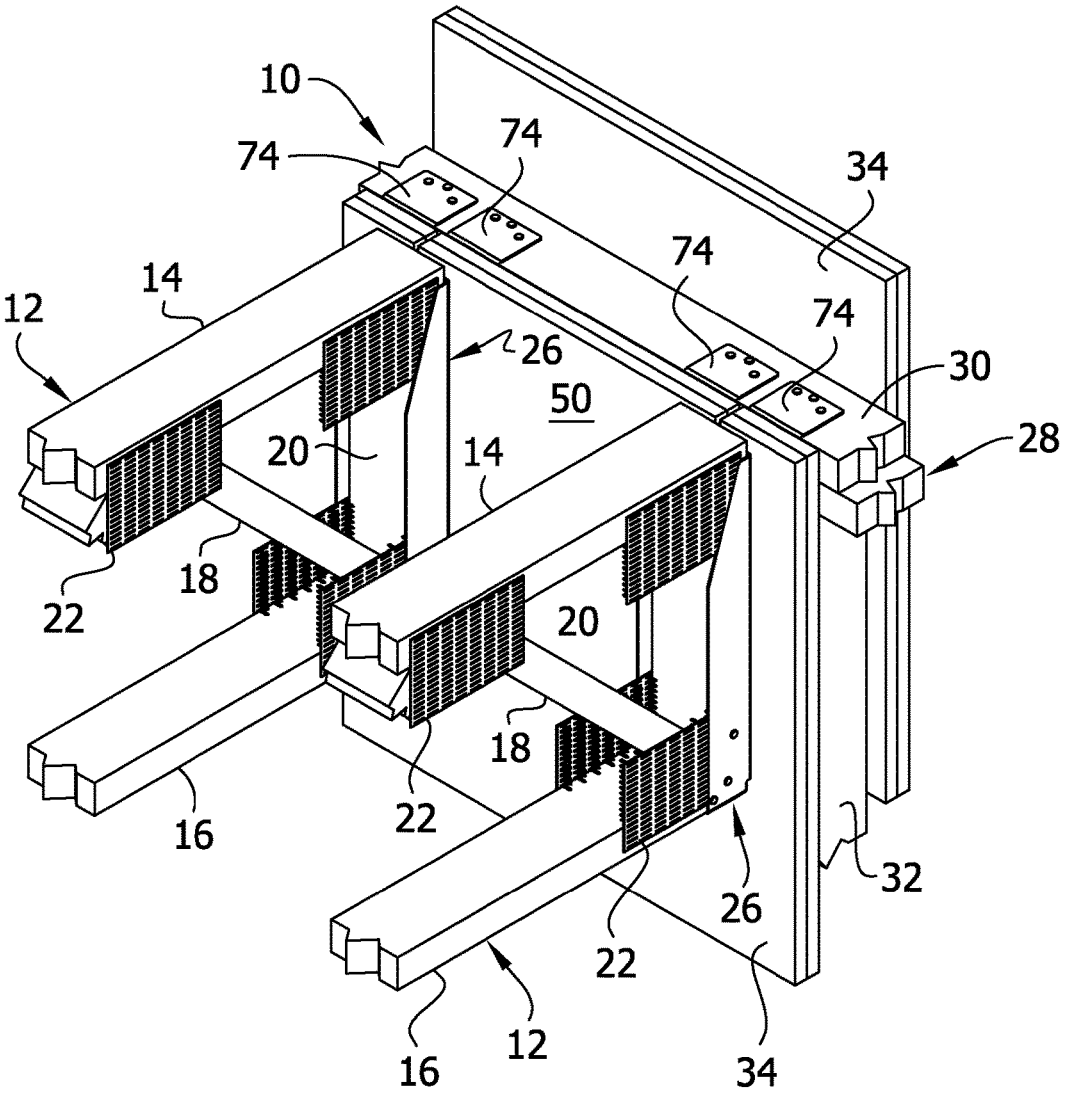
10
74
74
34
74
74
14
12
26
50
30
28
20
14
18
22
20
18
16
22
26
32
22
12
16
34

FIG. 2

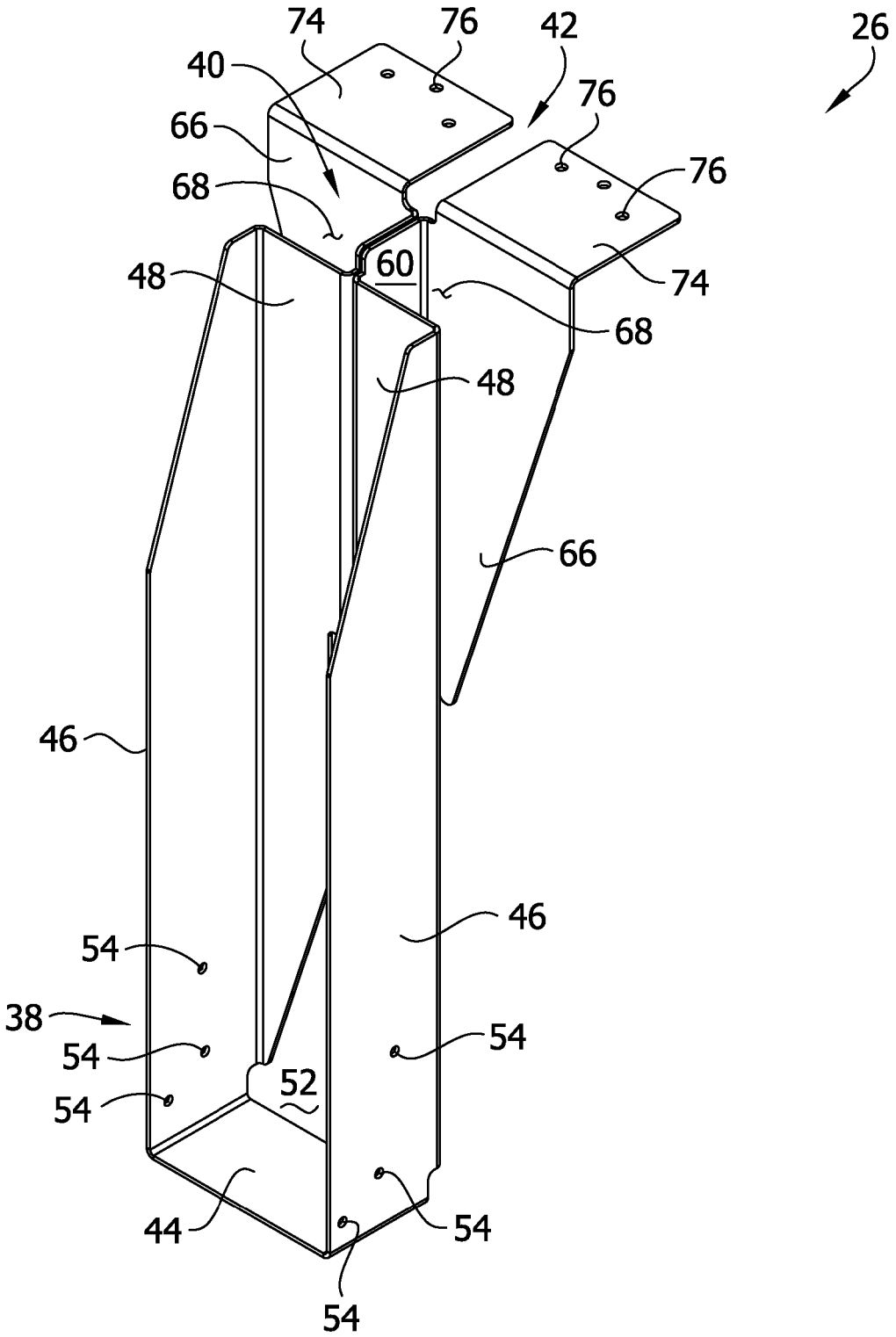
74
76
42
26
40
76
66
76
68
60
74
48
68
48
66
46
46
54
38
54
54
54
52
44
54
54

FIG. 2A

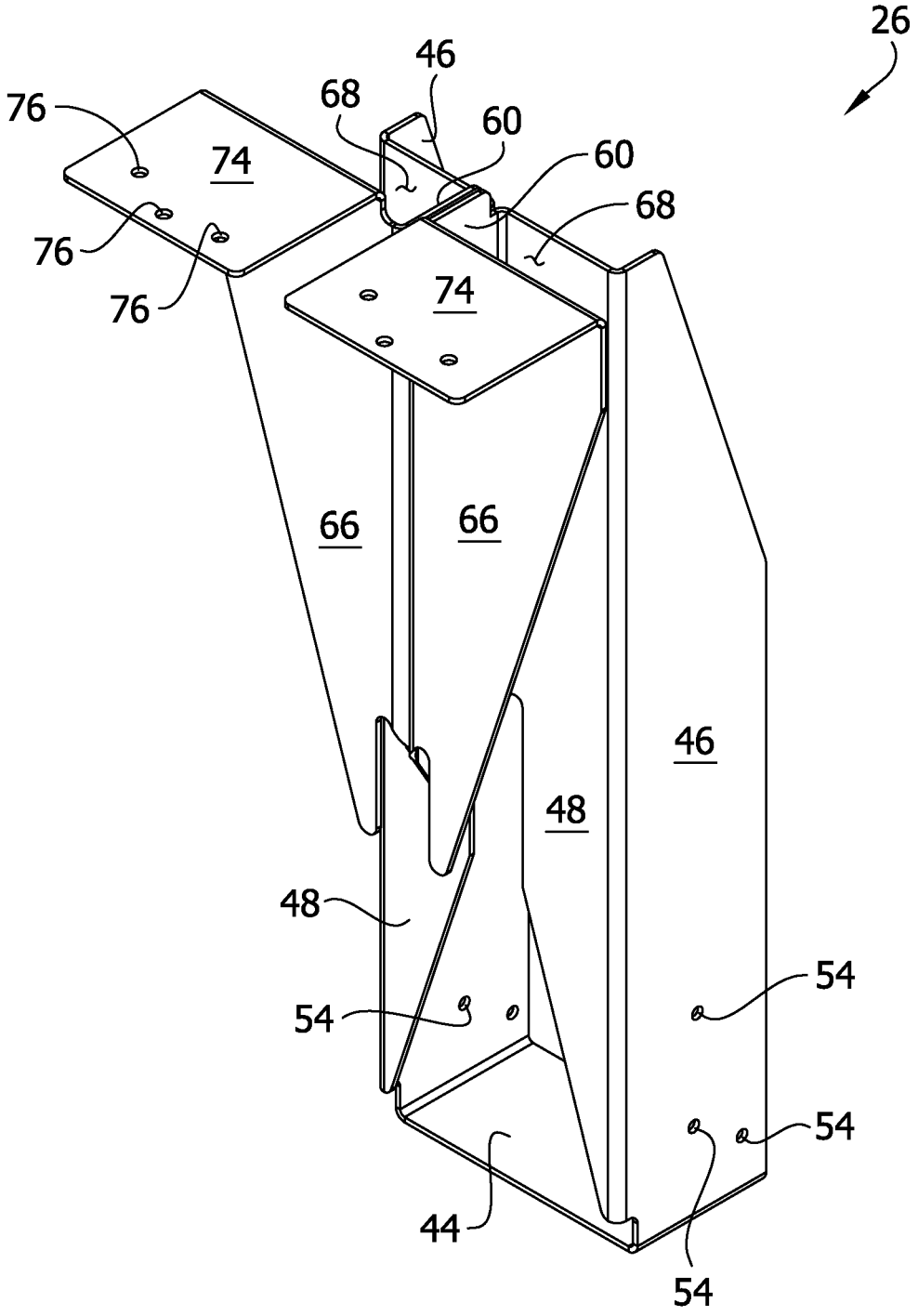

FIG. 3

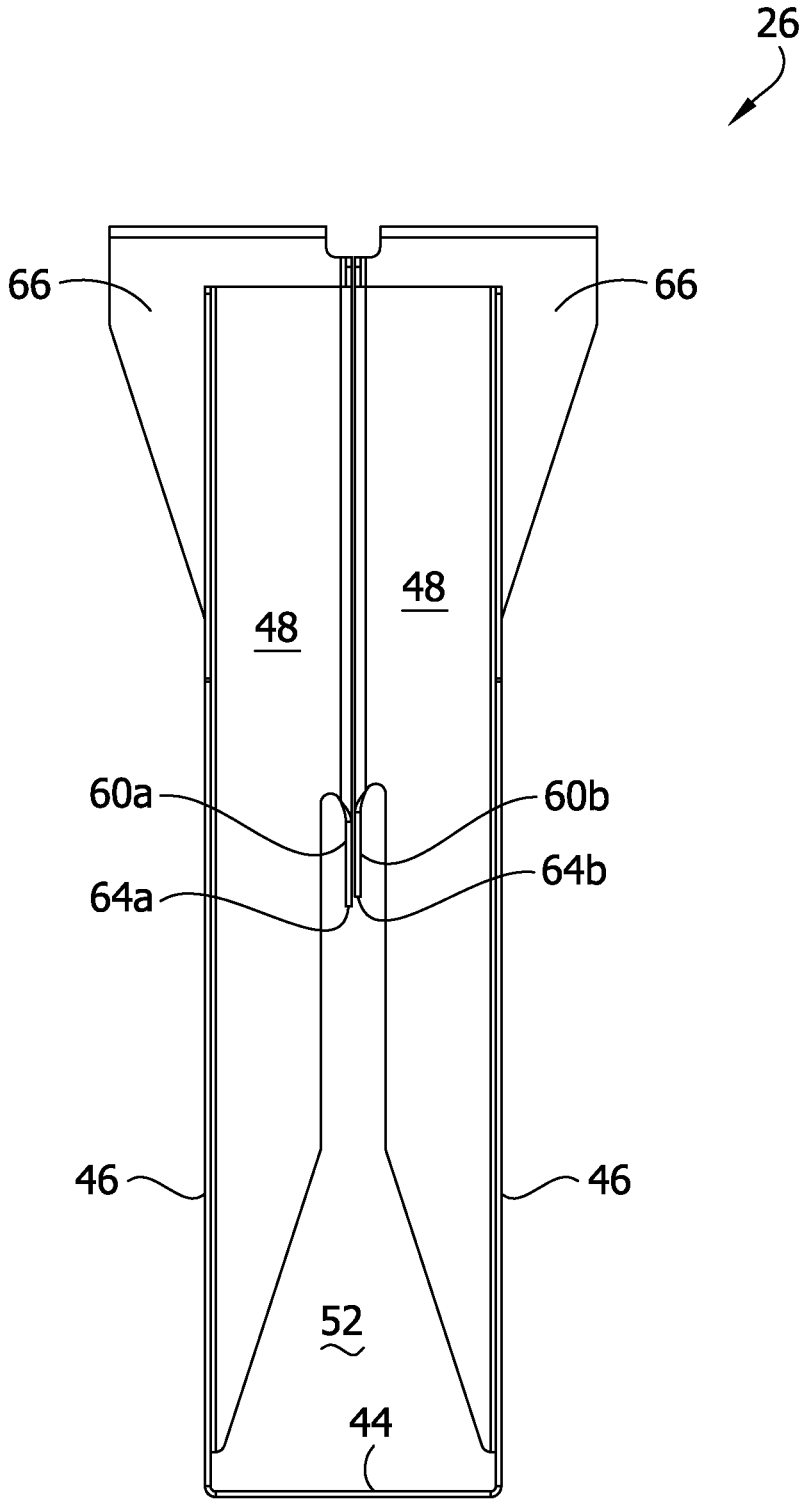

FIG. 4

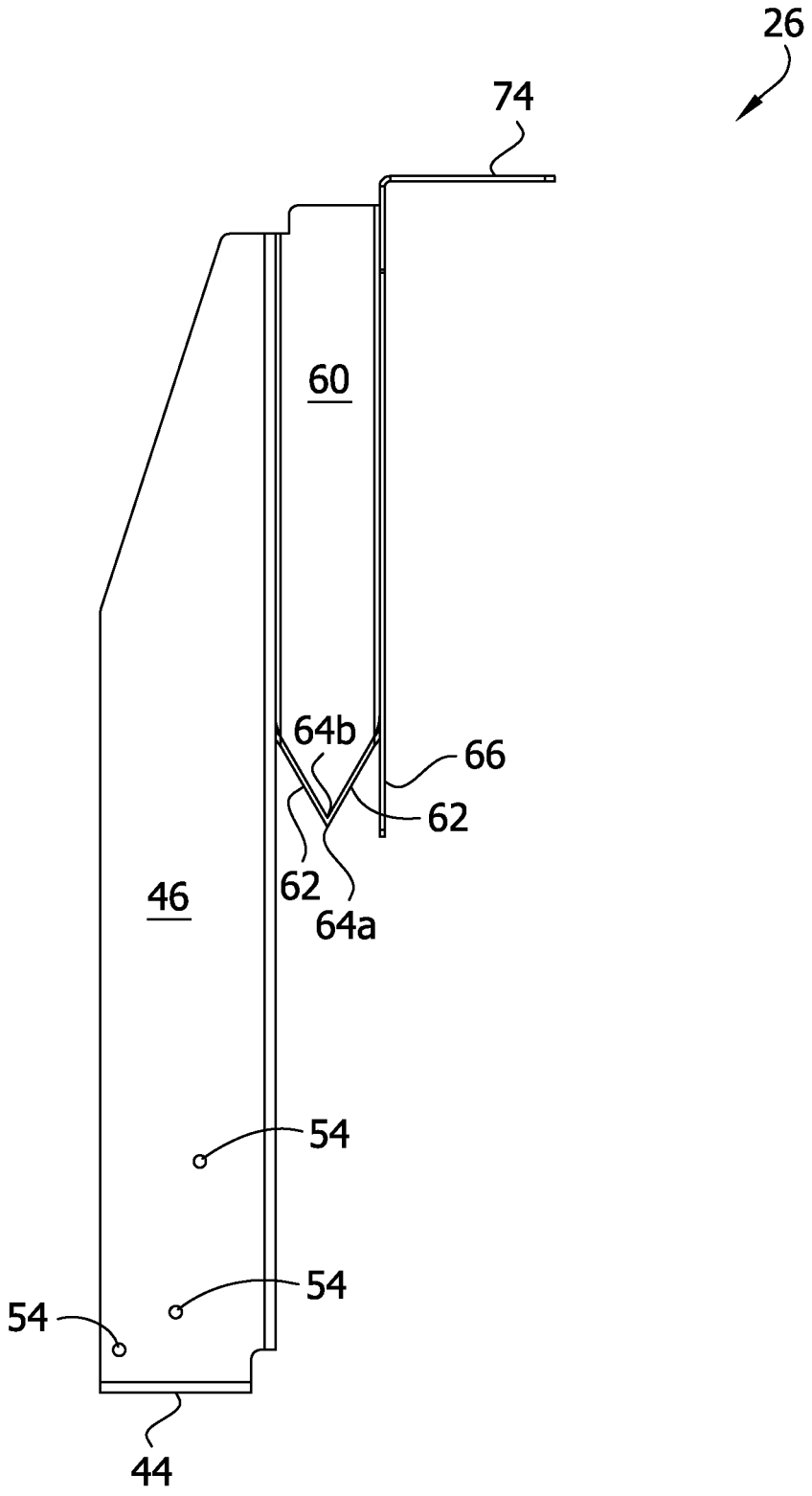

FIG. 5

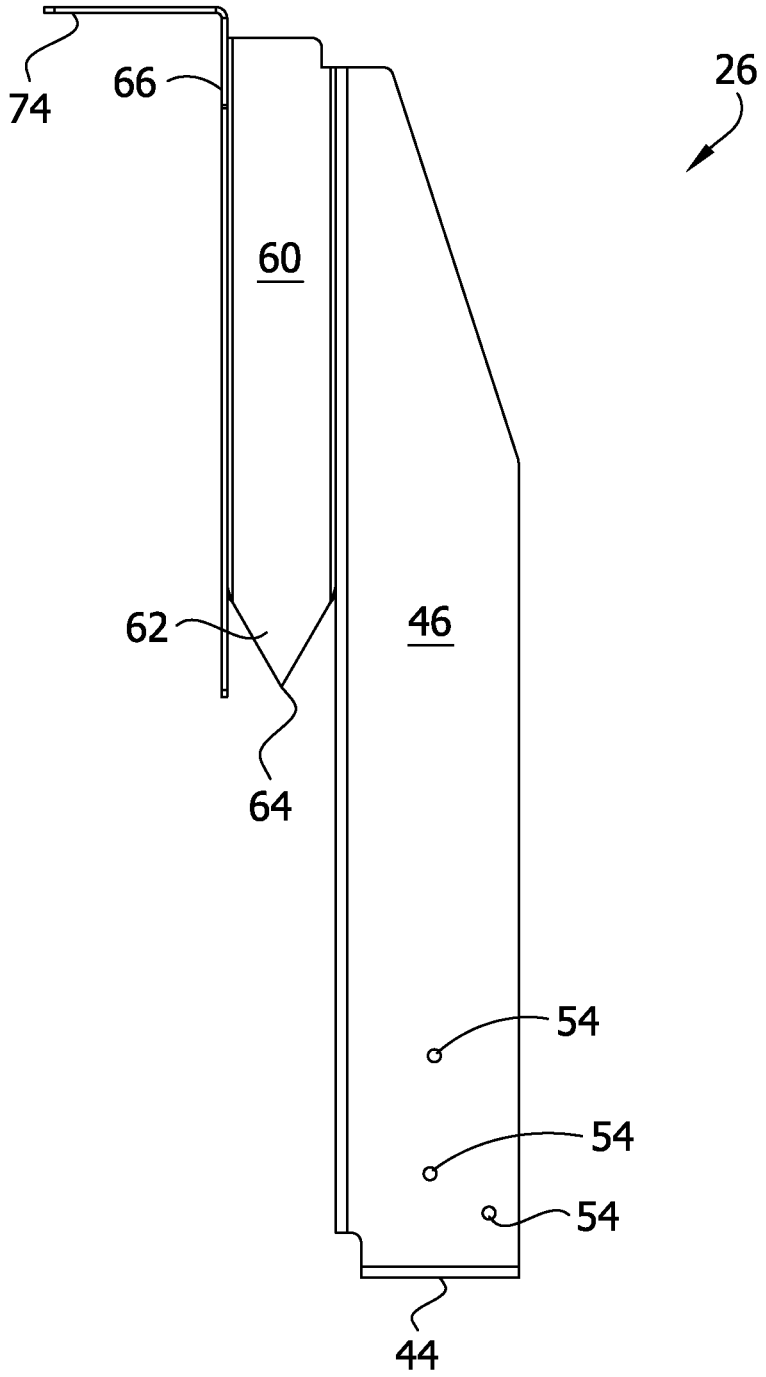

FIG. 6

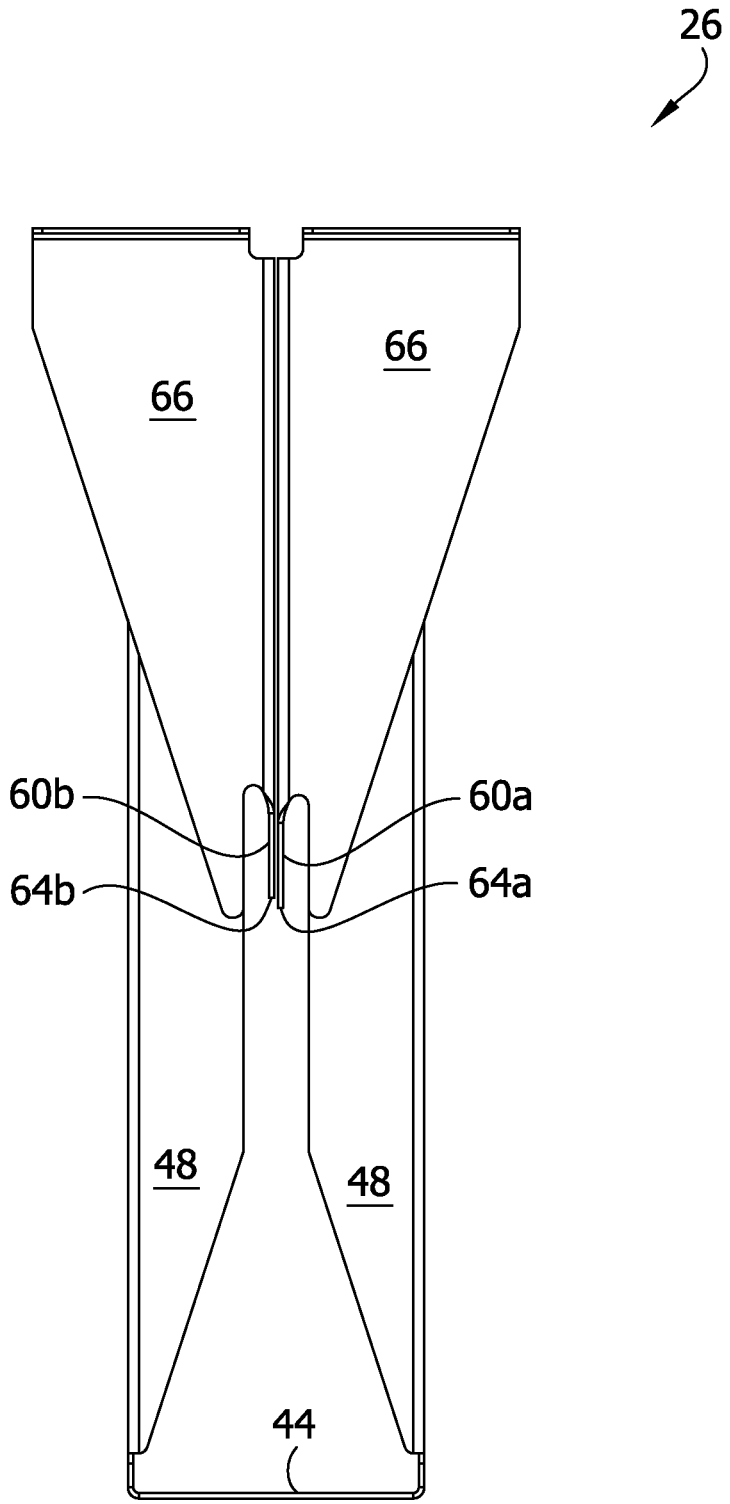

FIG. 7

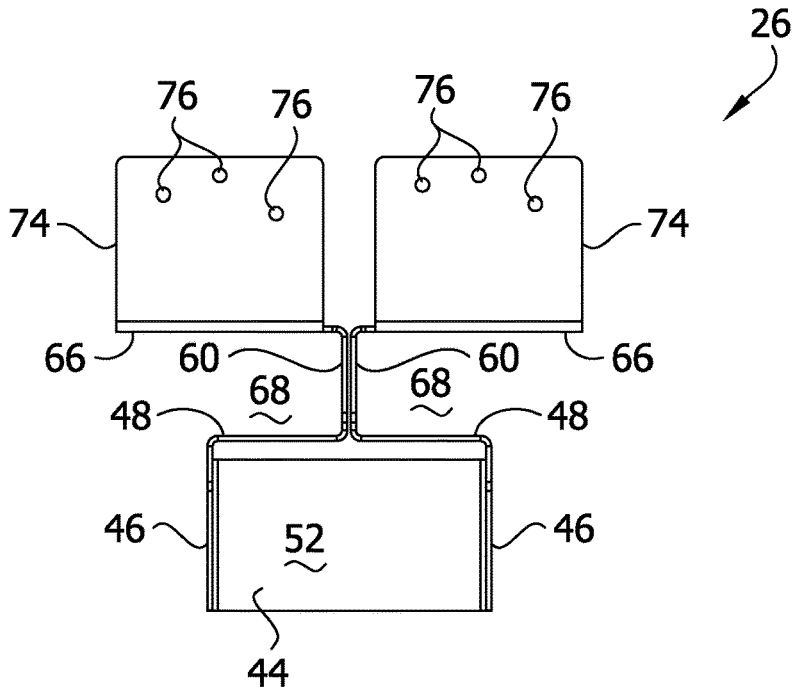
26
76
76
76
76
74
74
66
60
60
66
68
68
48
48
46
46
52
44

FIG. 8

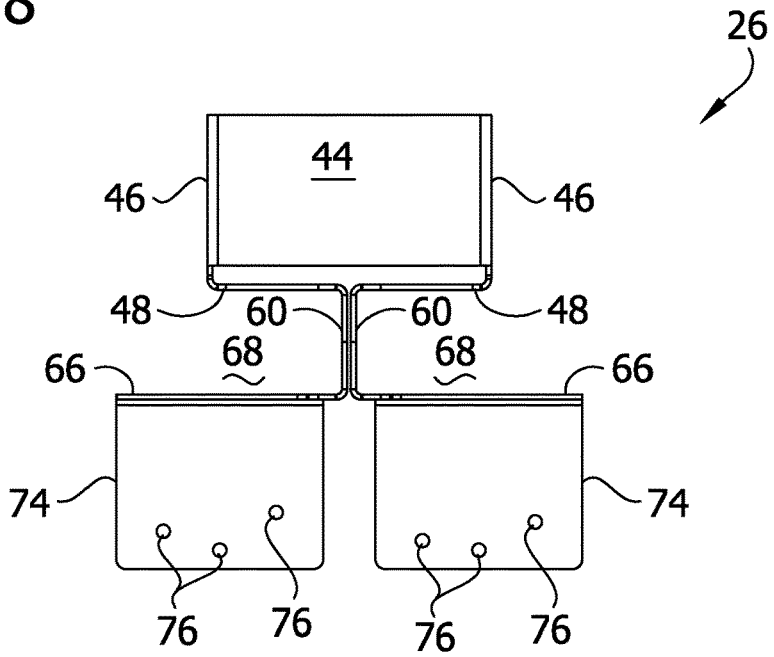
26
44
46
46
48
60
60
48
68
68
66
66
74
74
76
76
76
76

FIG. 9

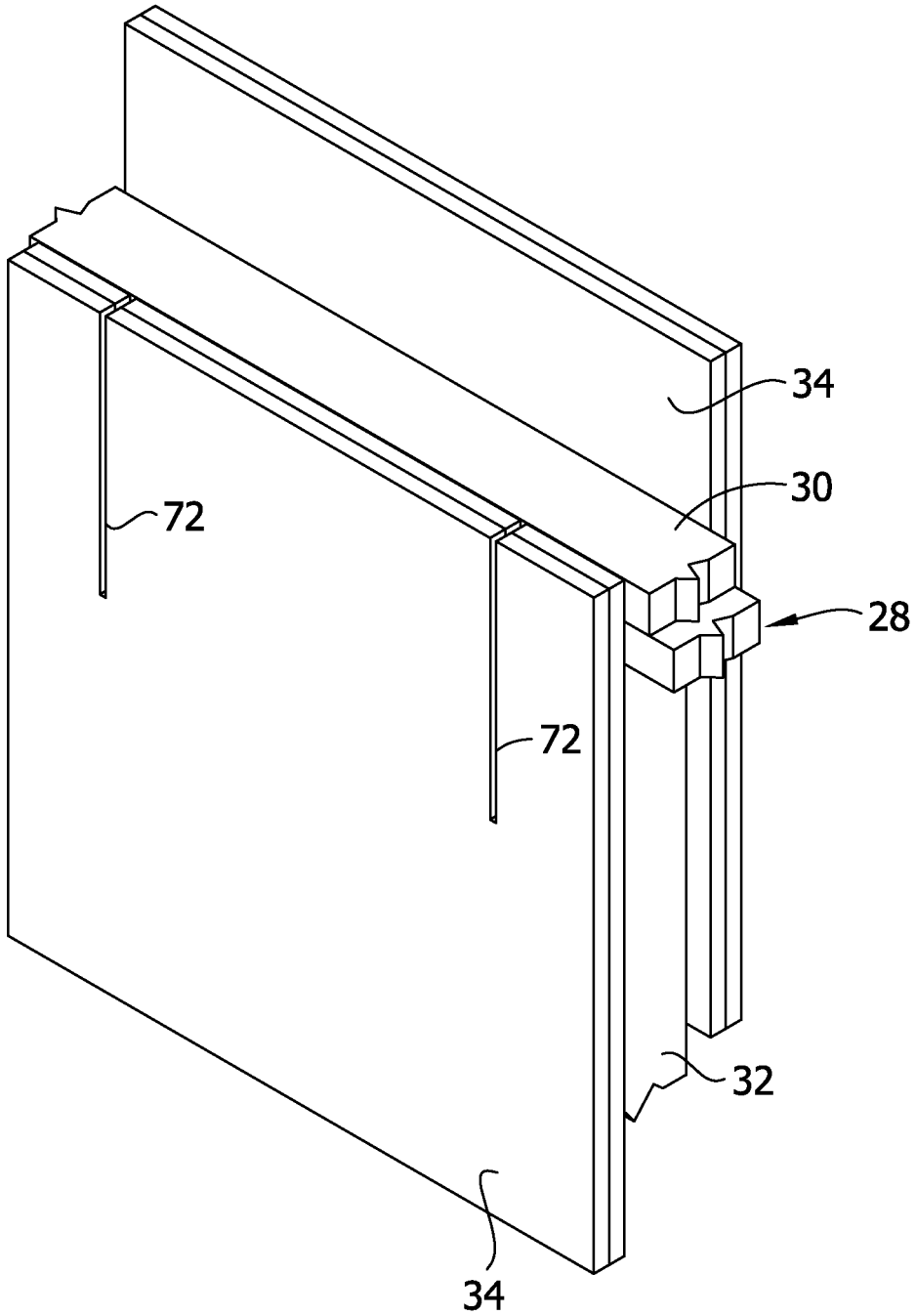

FIG. 10

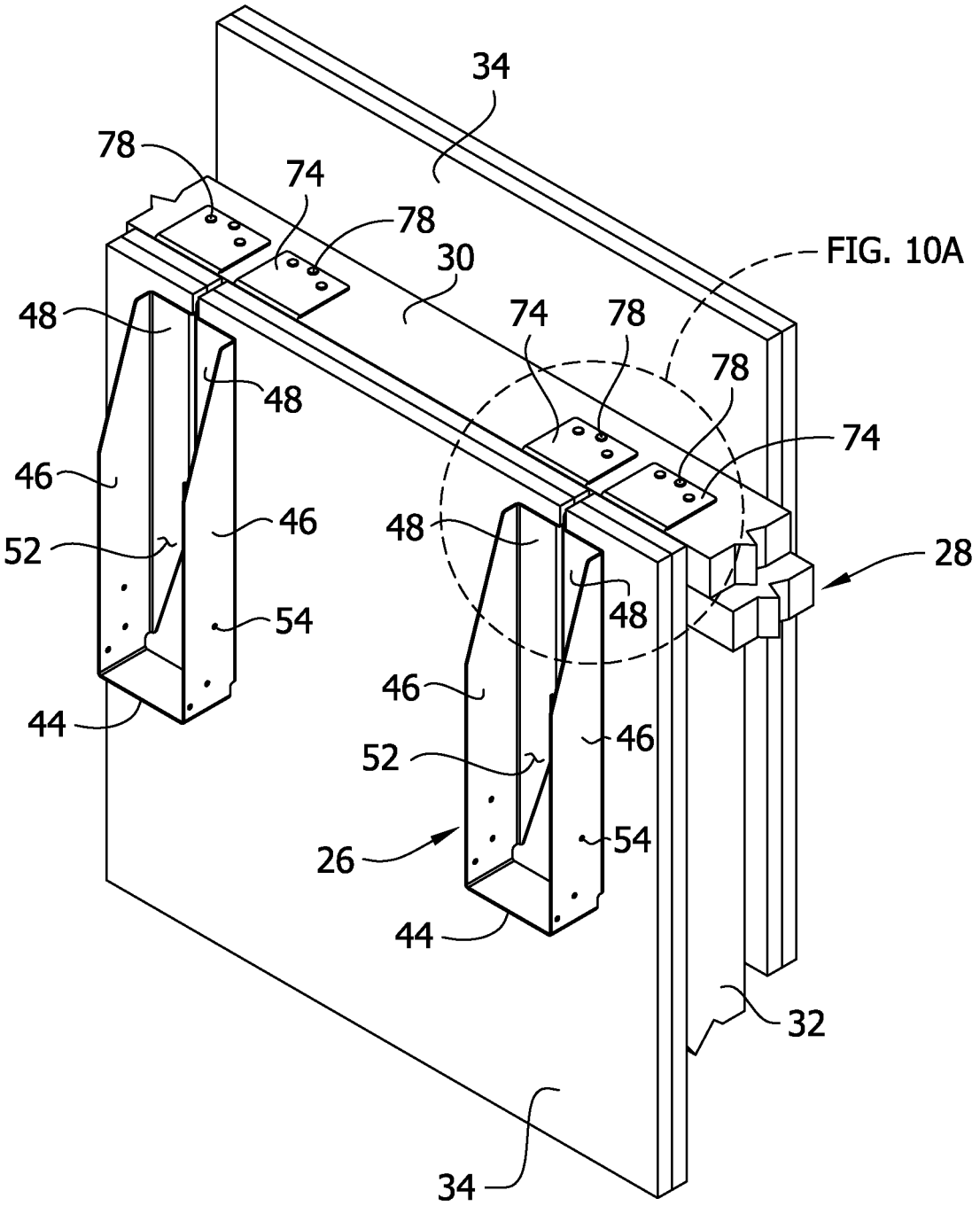
34
78
74
78
30
FIG. 10A
48
74
78
78
48
74
46
46
48
52
28
54
48
46
44
46
52
54
26
44
32
34

FIG. 10A

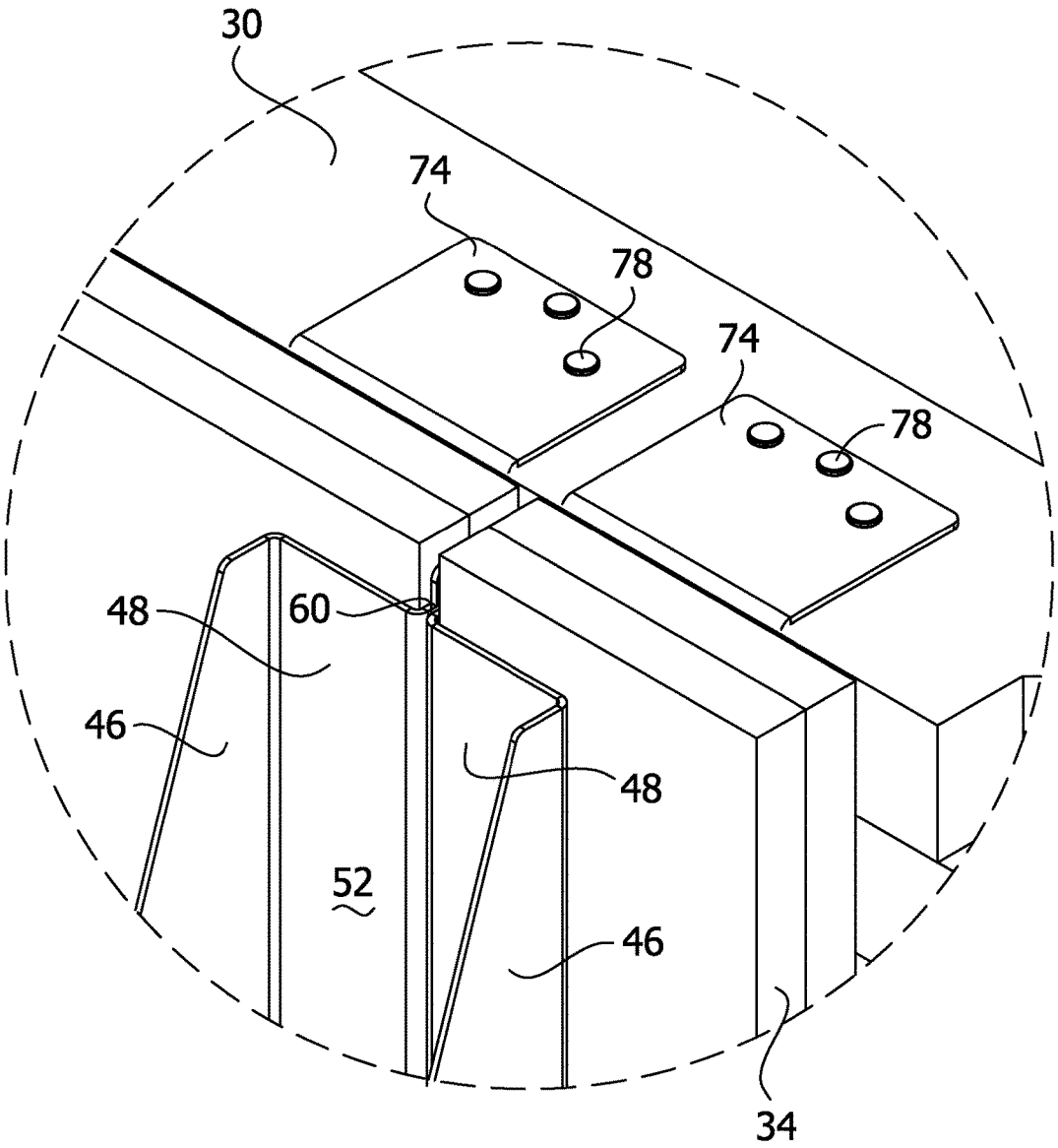

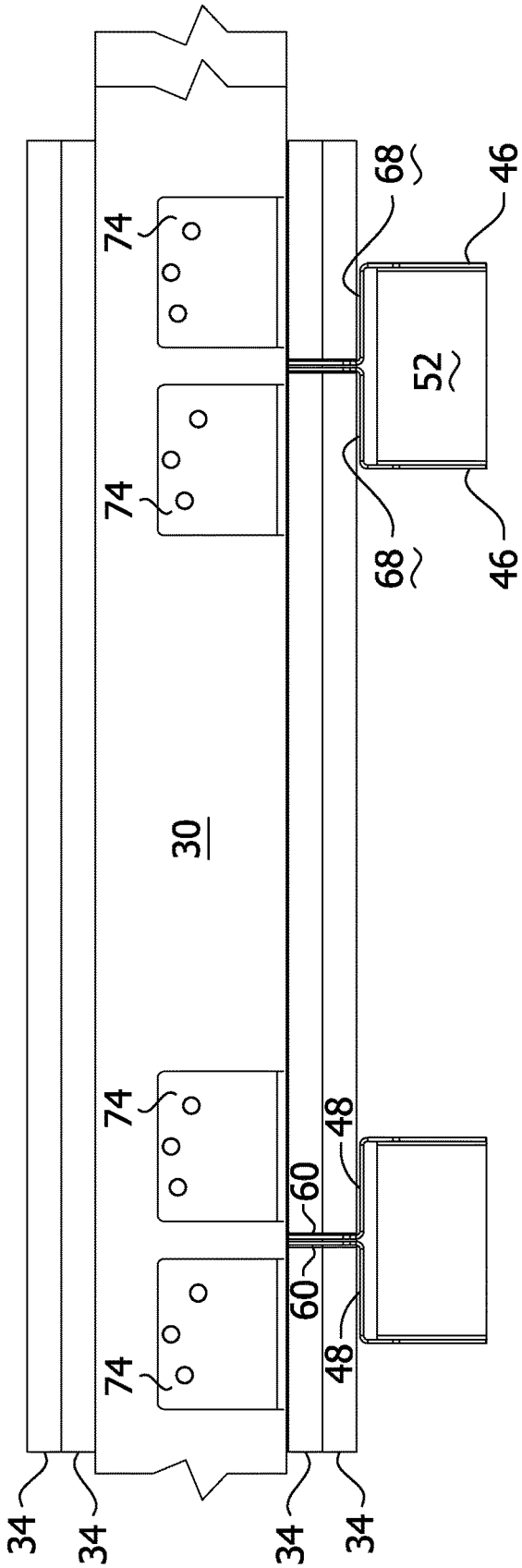

FIG. 11

FIG. 12

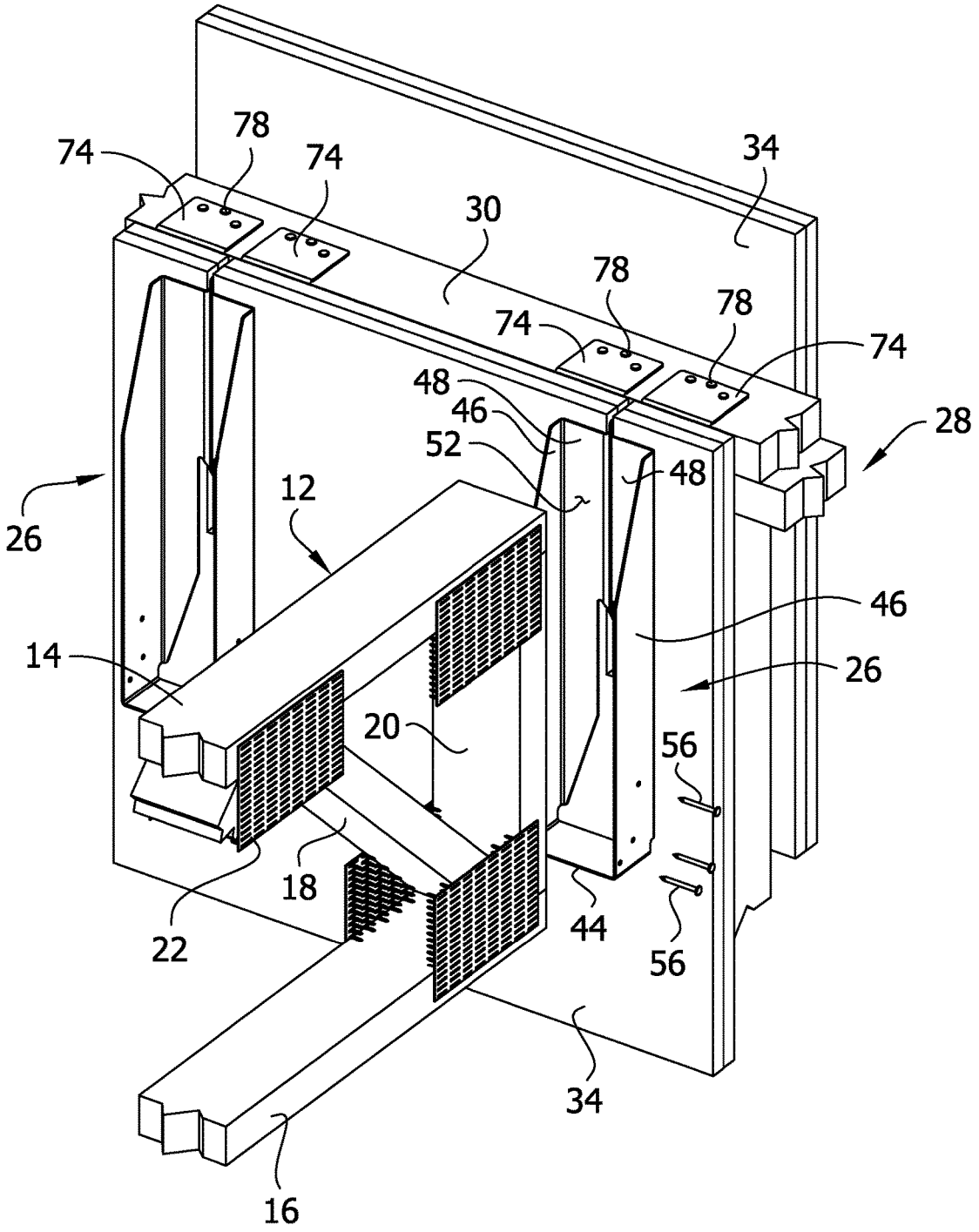
74
78
74
34
30
78
78
74
74
48
46
52
48
28
26
12
46
14
26
20
56
18
22
44
56
34
16

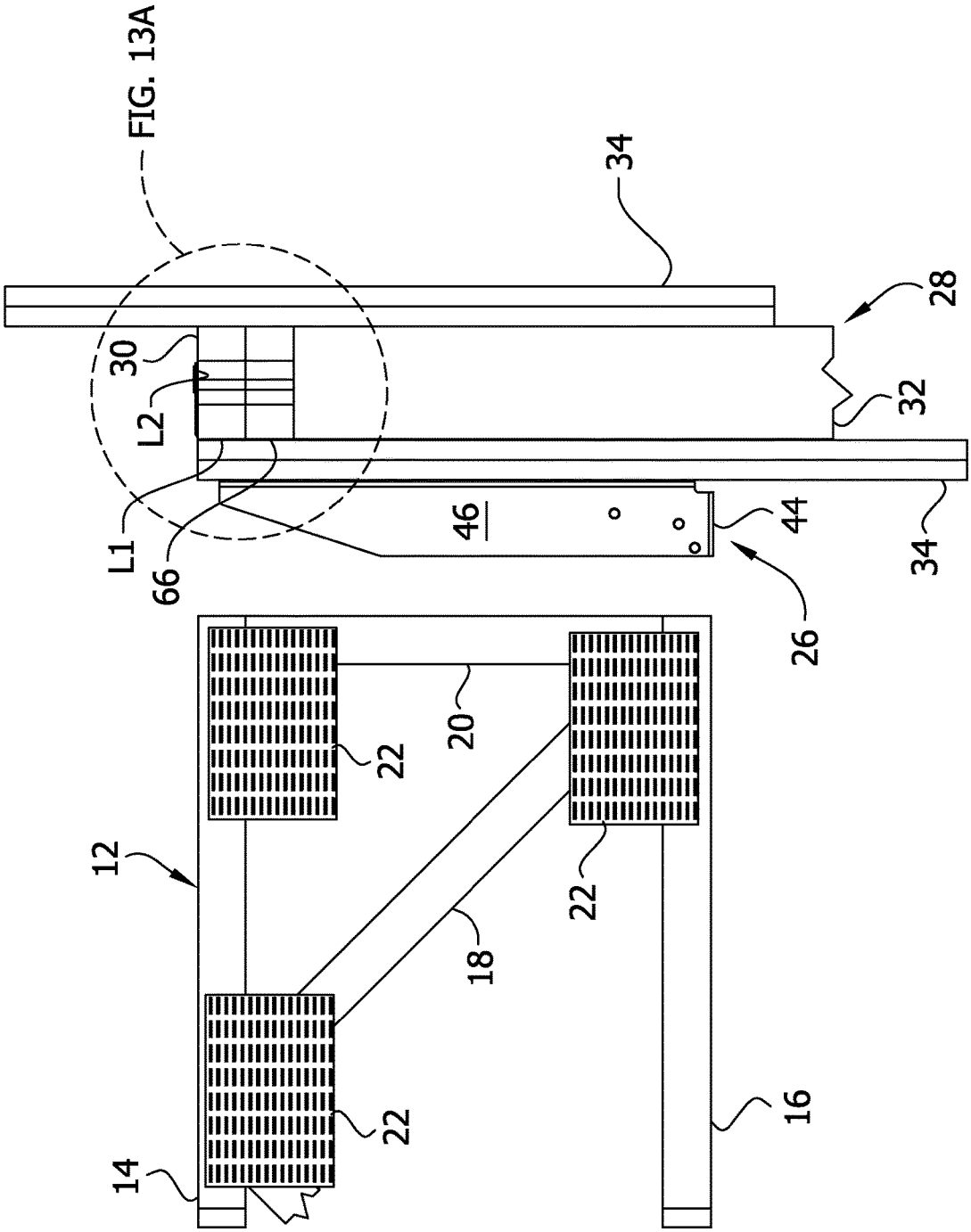

FIG. 13

FIG. 13A

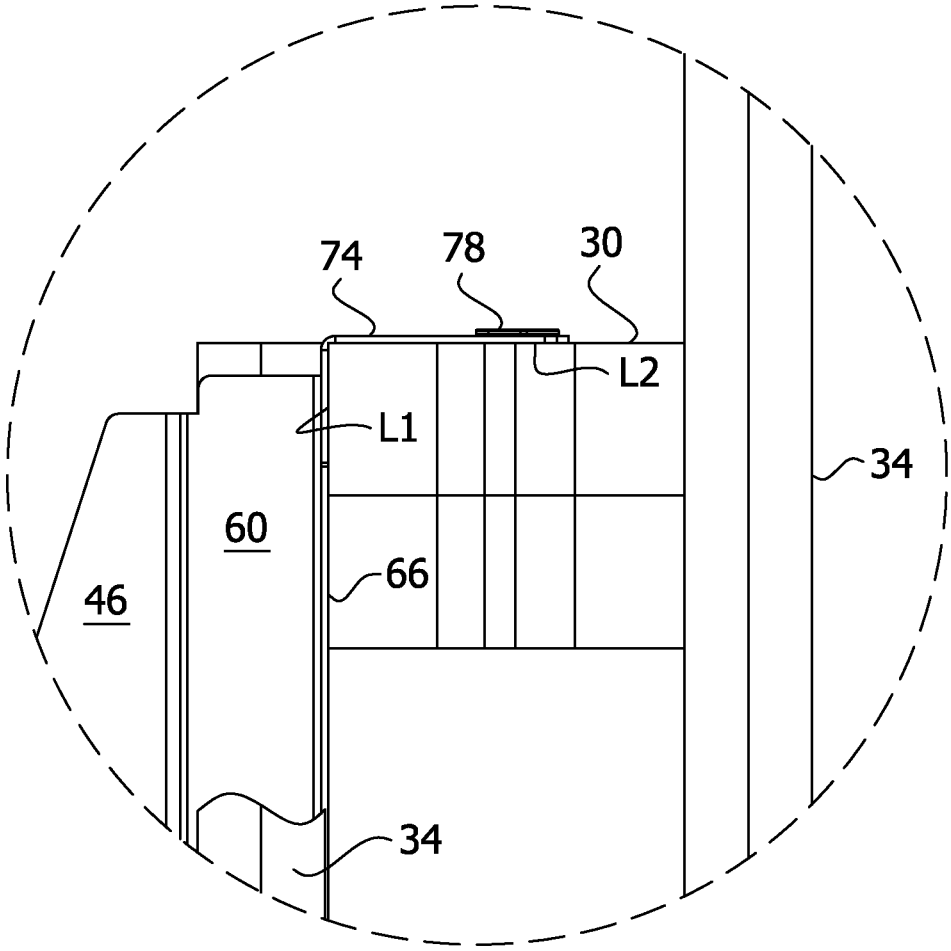

FIG. 14

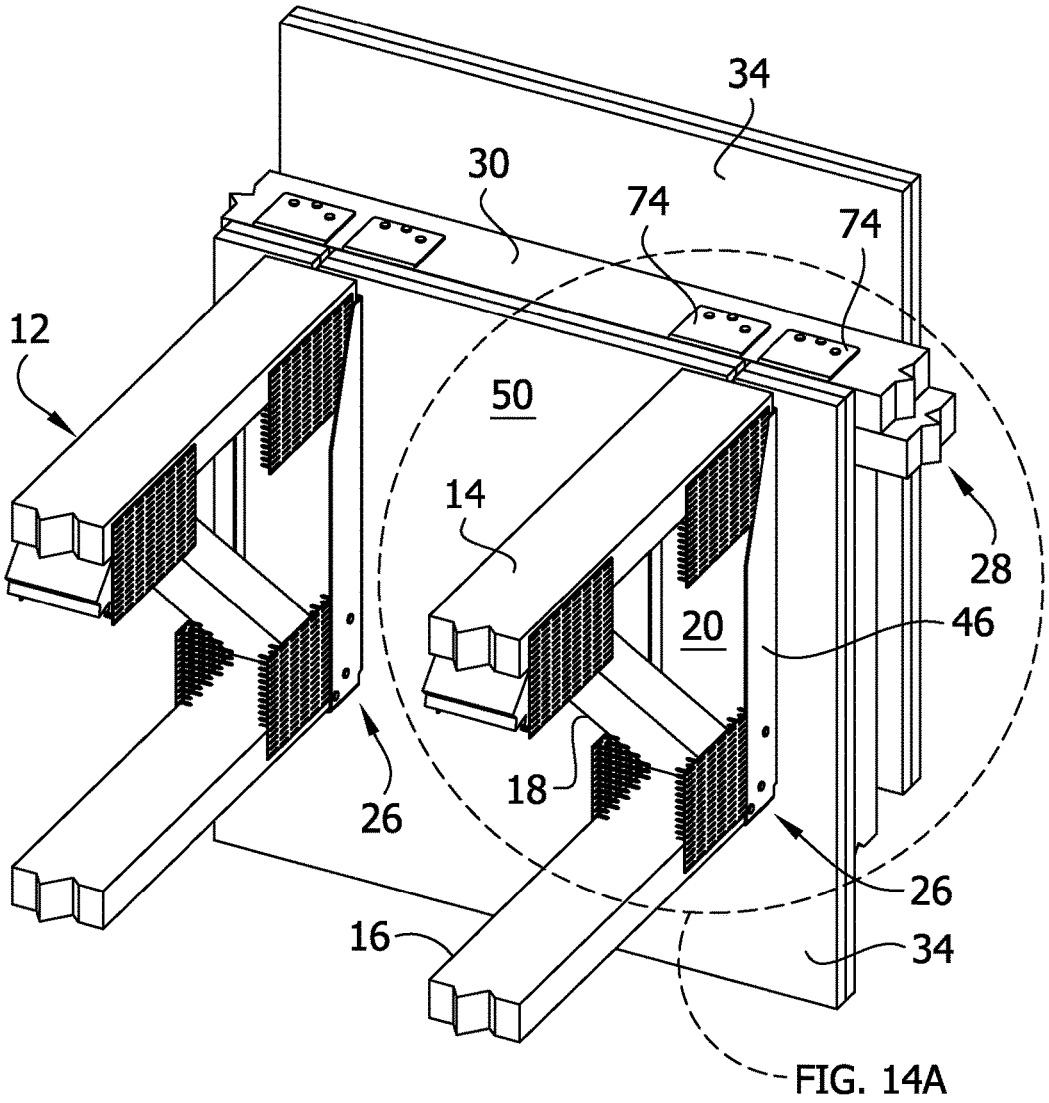

FIG. 14A

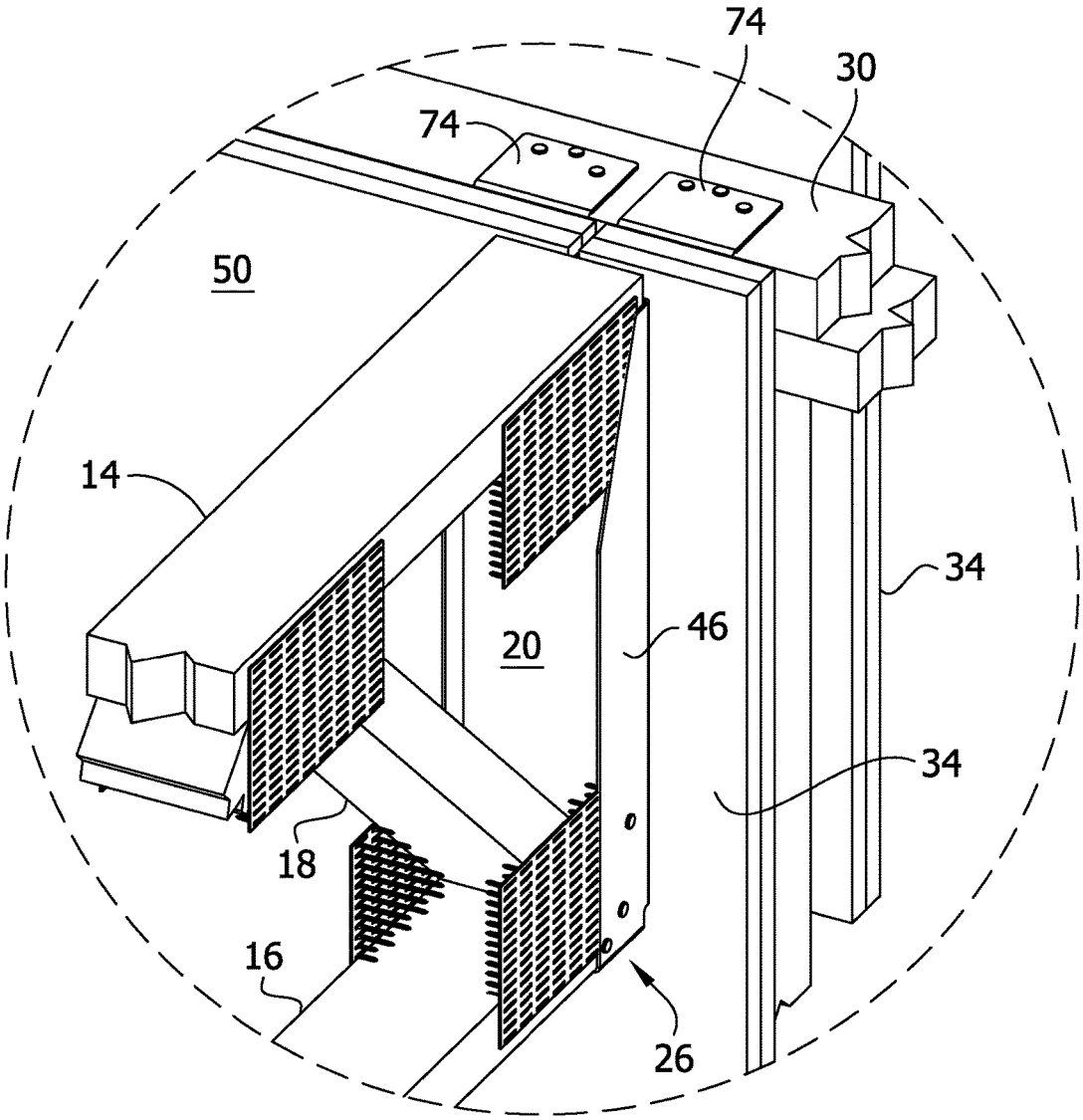

FIG. 15

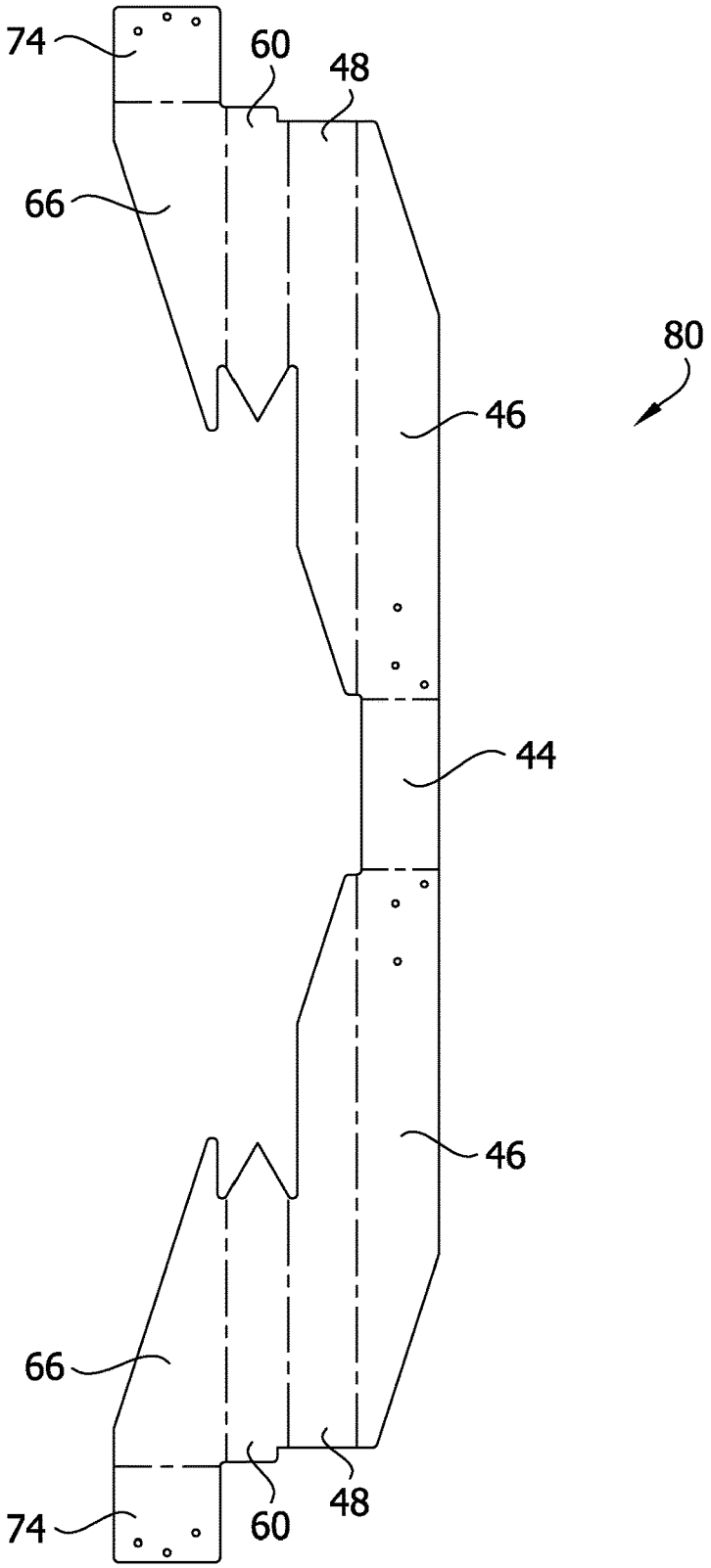

FIG. 16

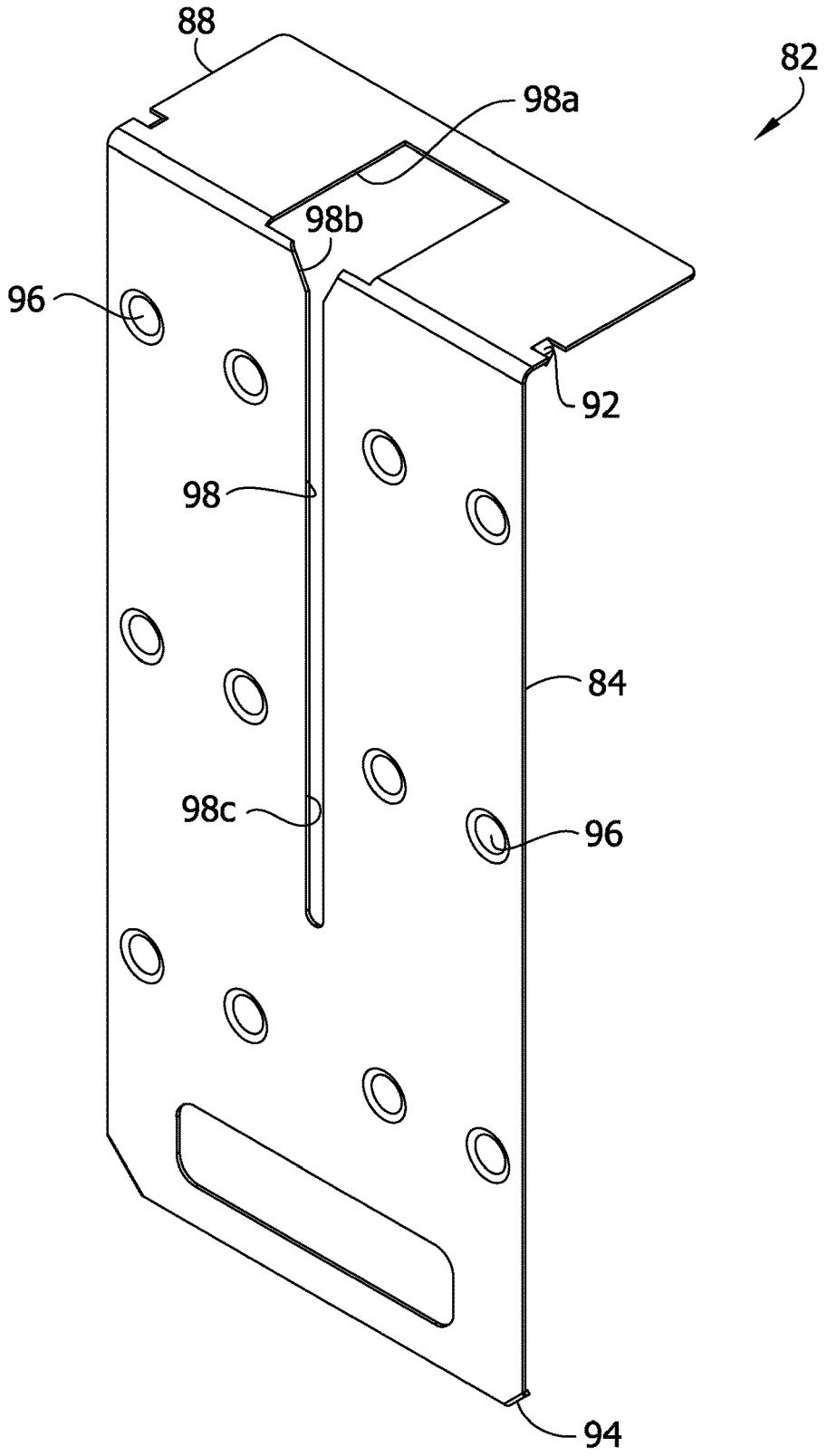

FIG. 17

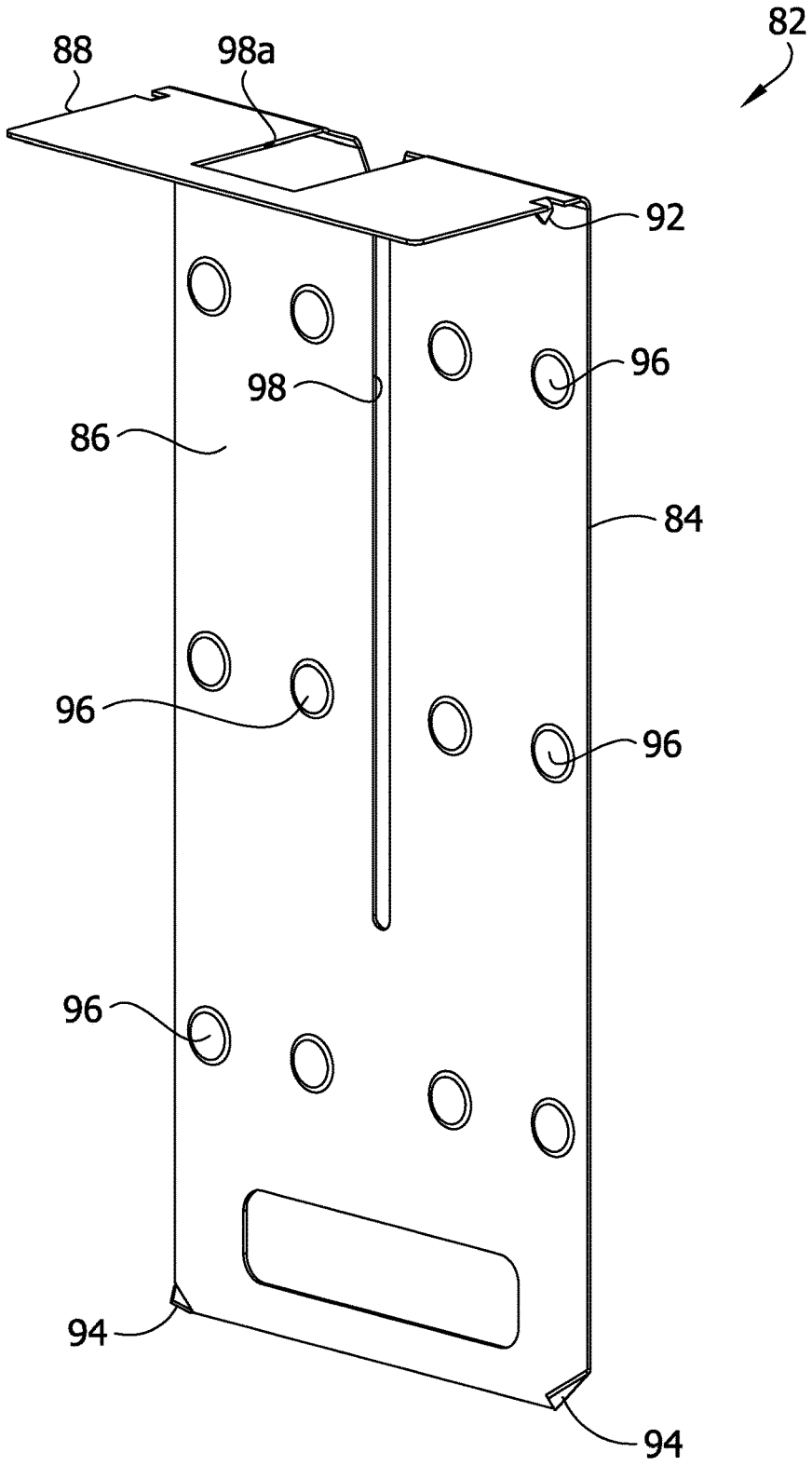

FIG. 18

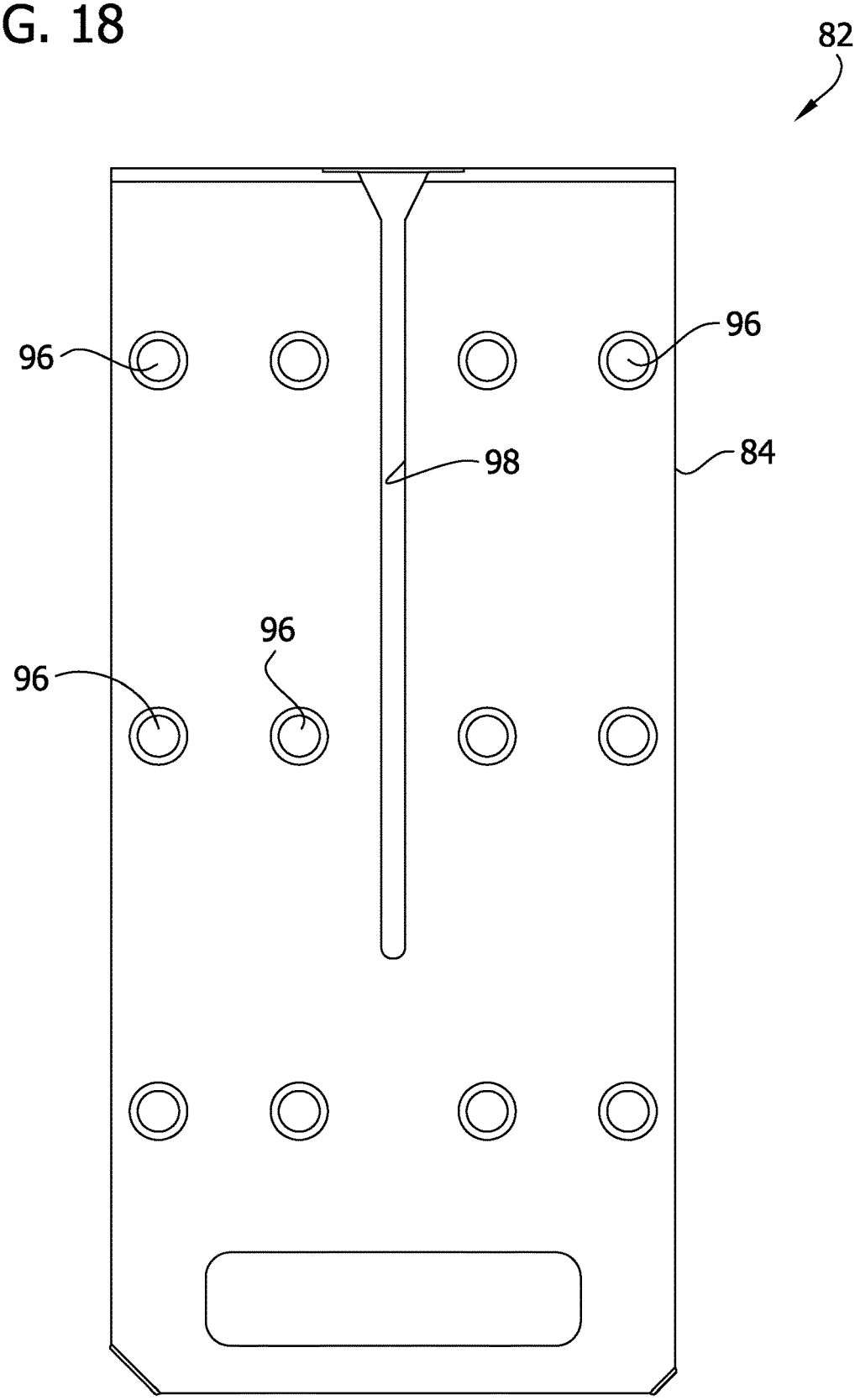

FIG. 19

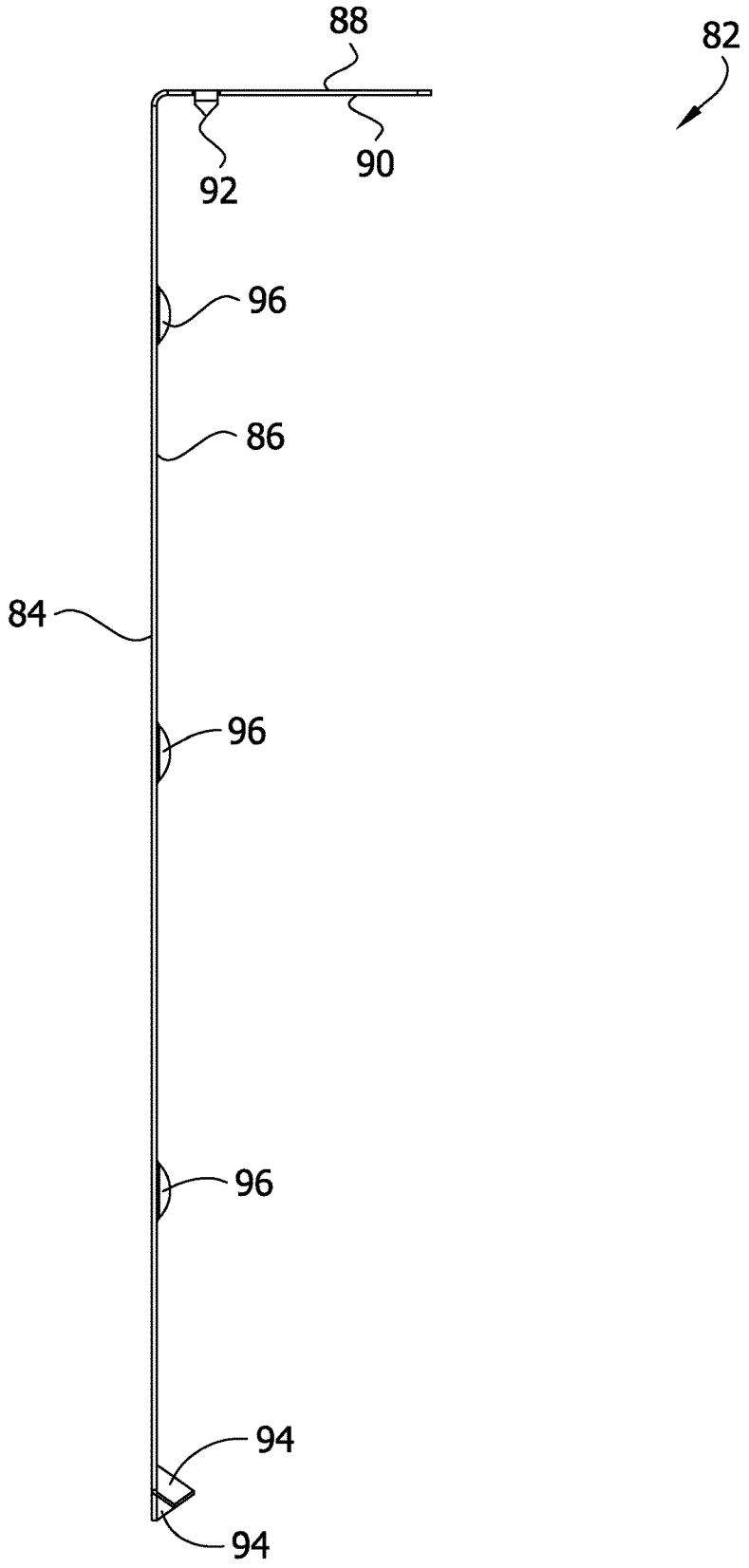

FIG. 20

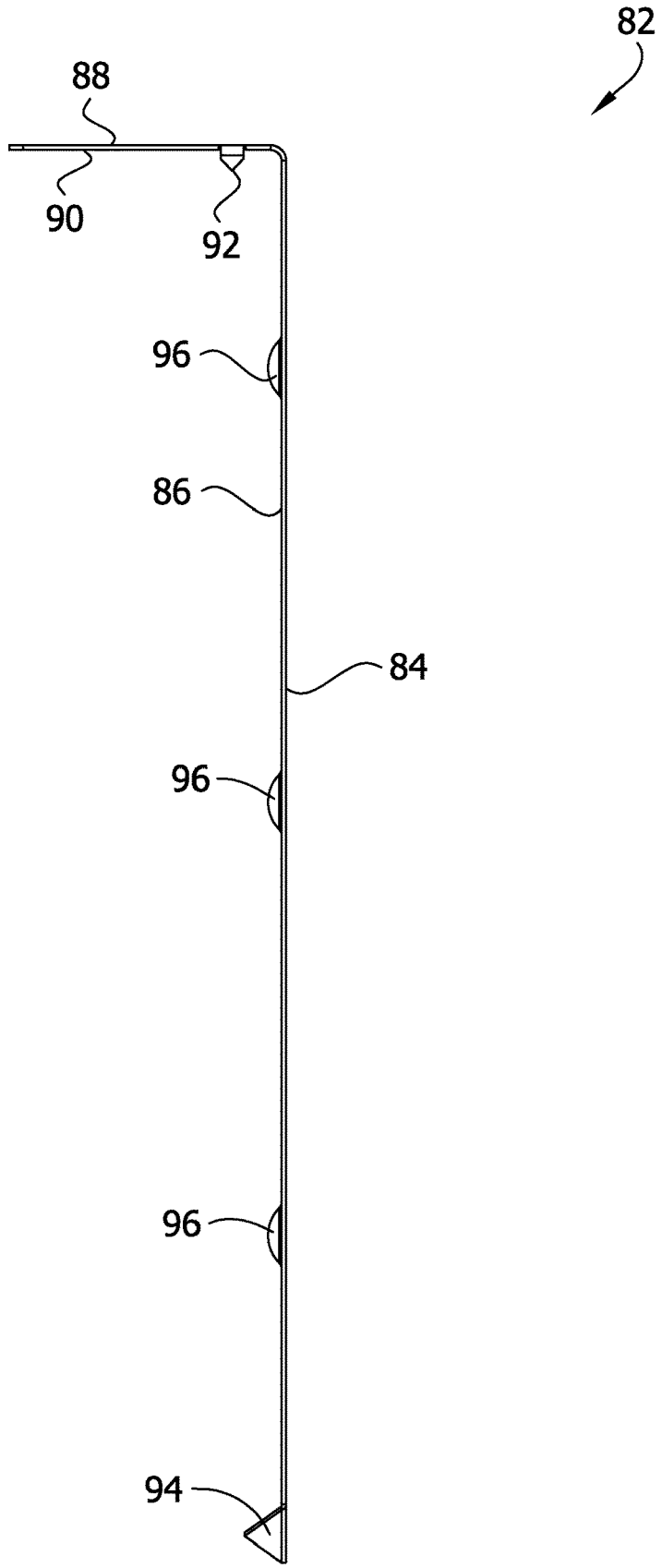

FIG. 21

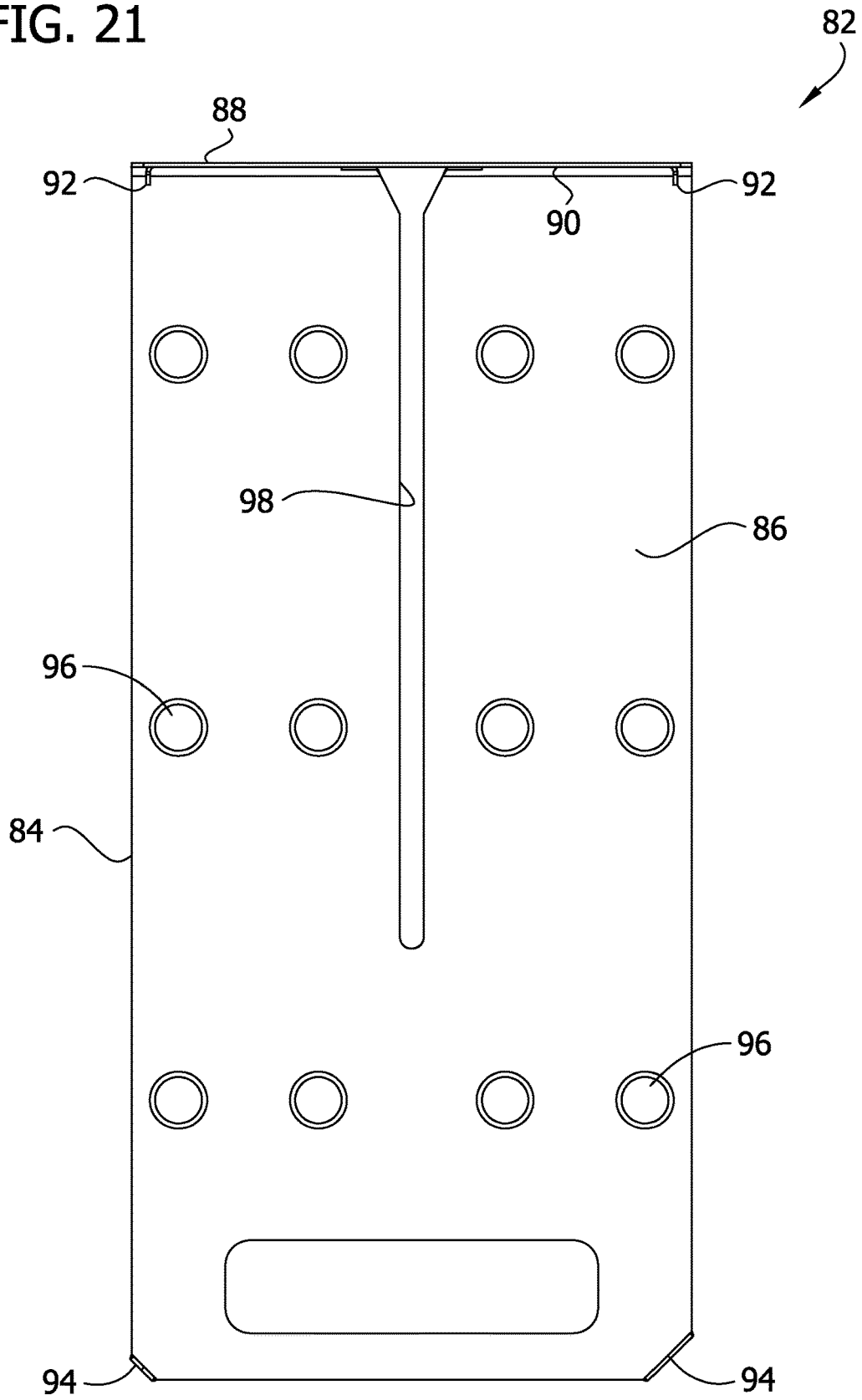

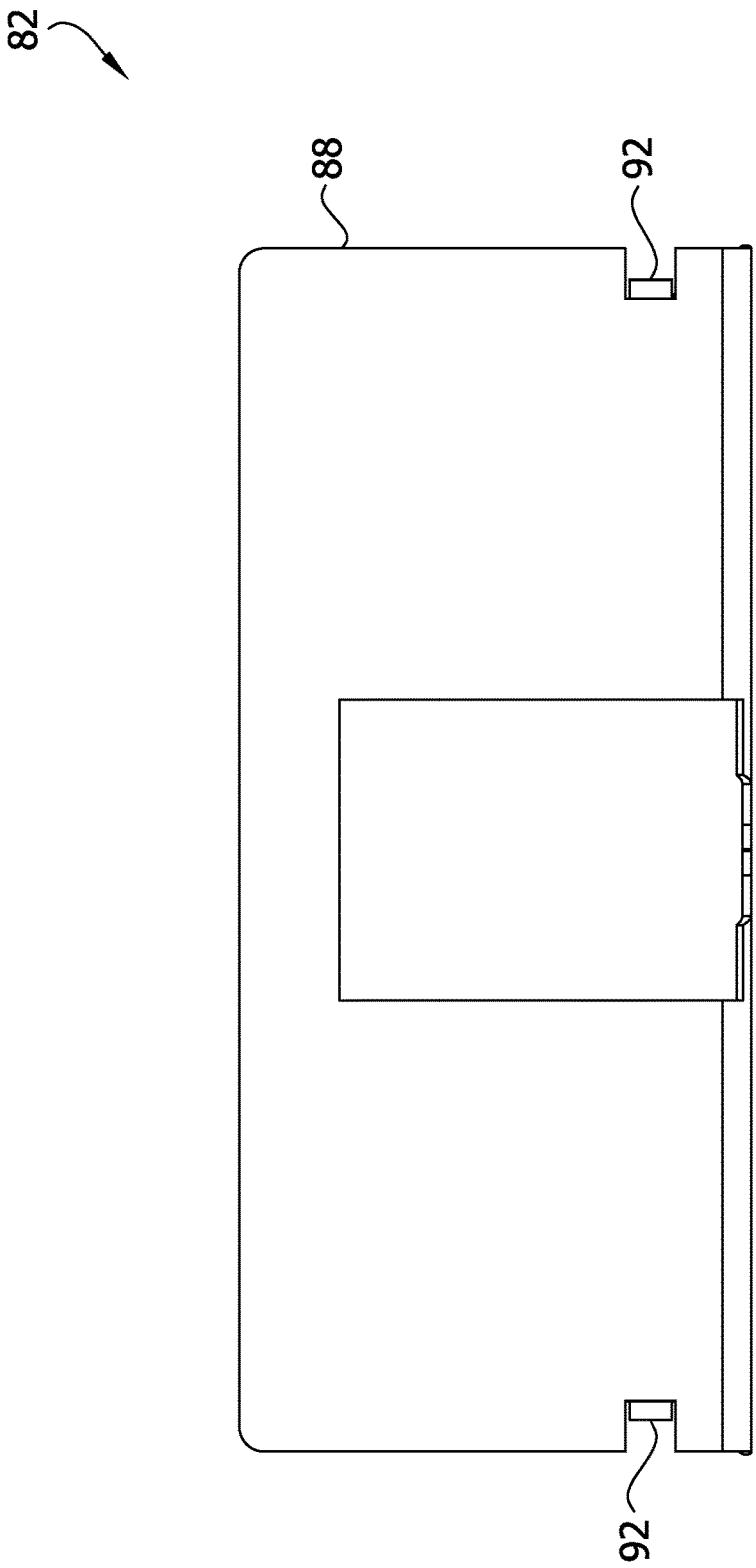

FIG. 22

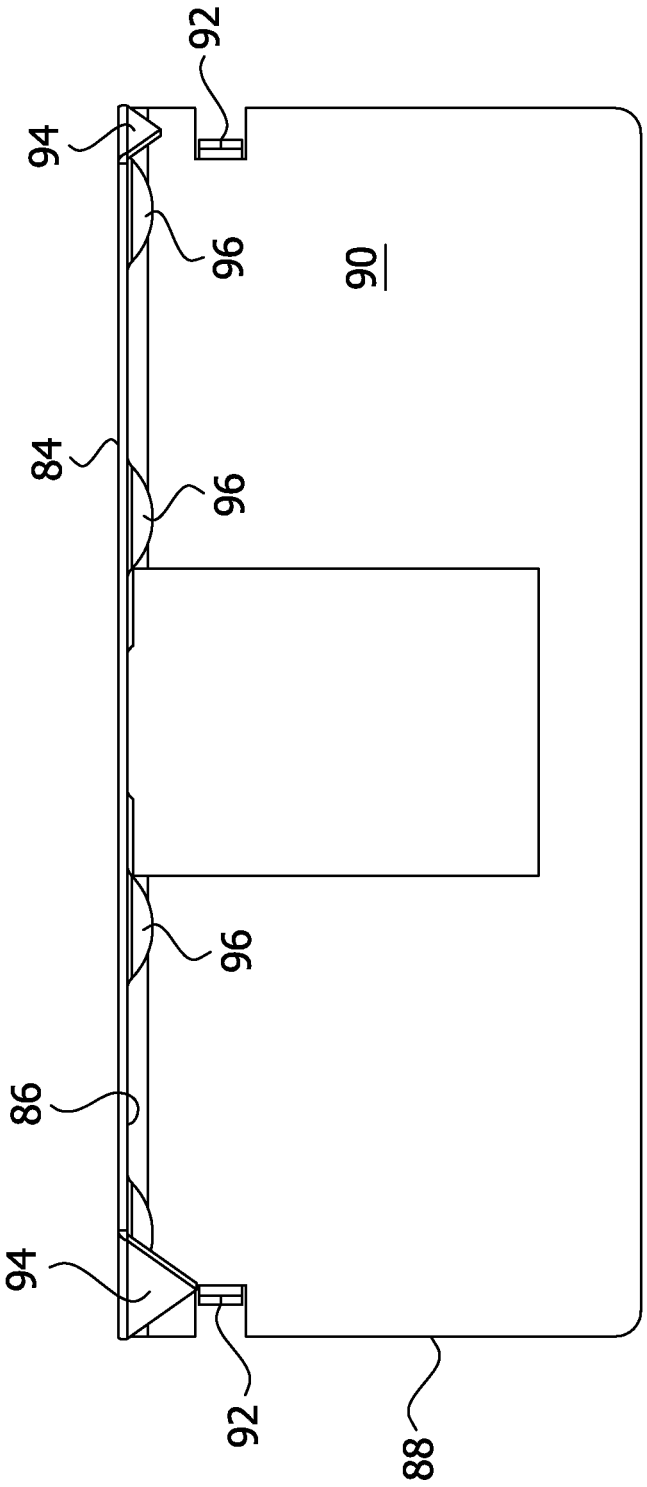

FIG. 23

FIG. 24

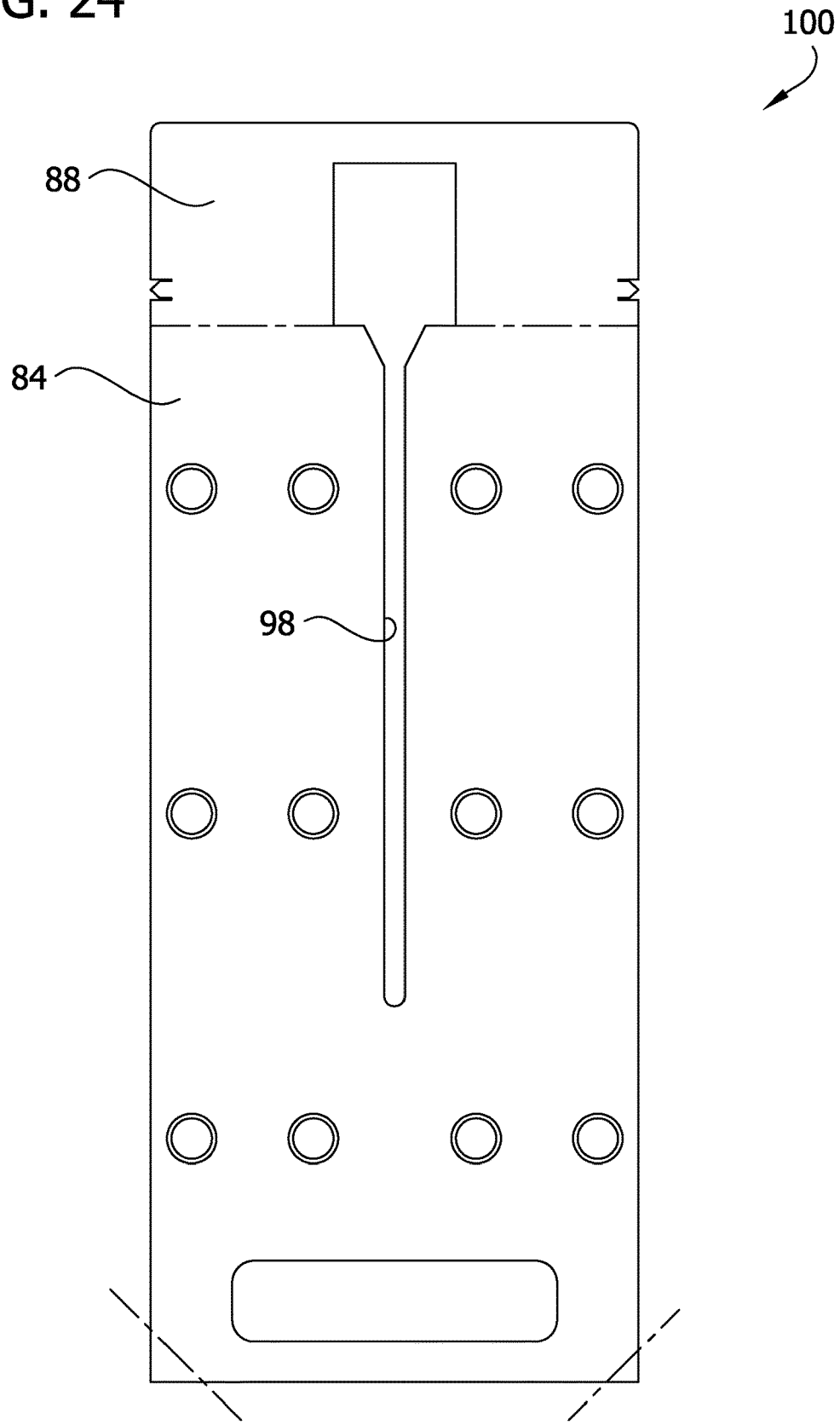

FIG. 25

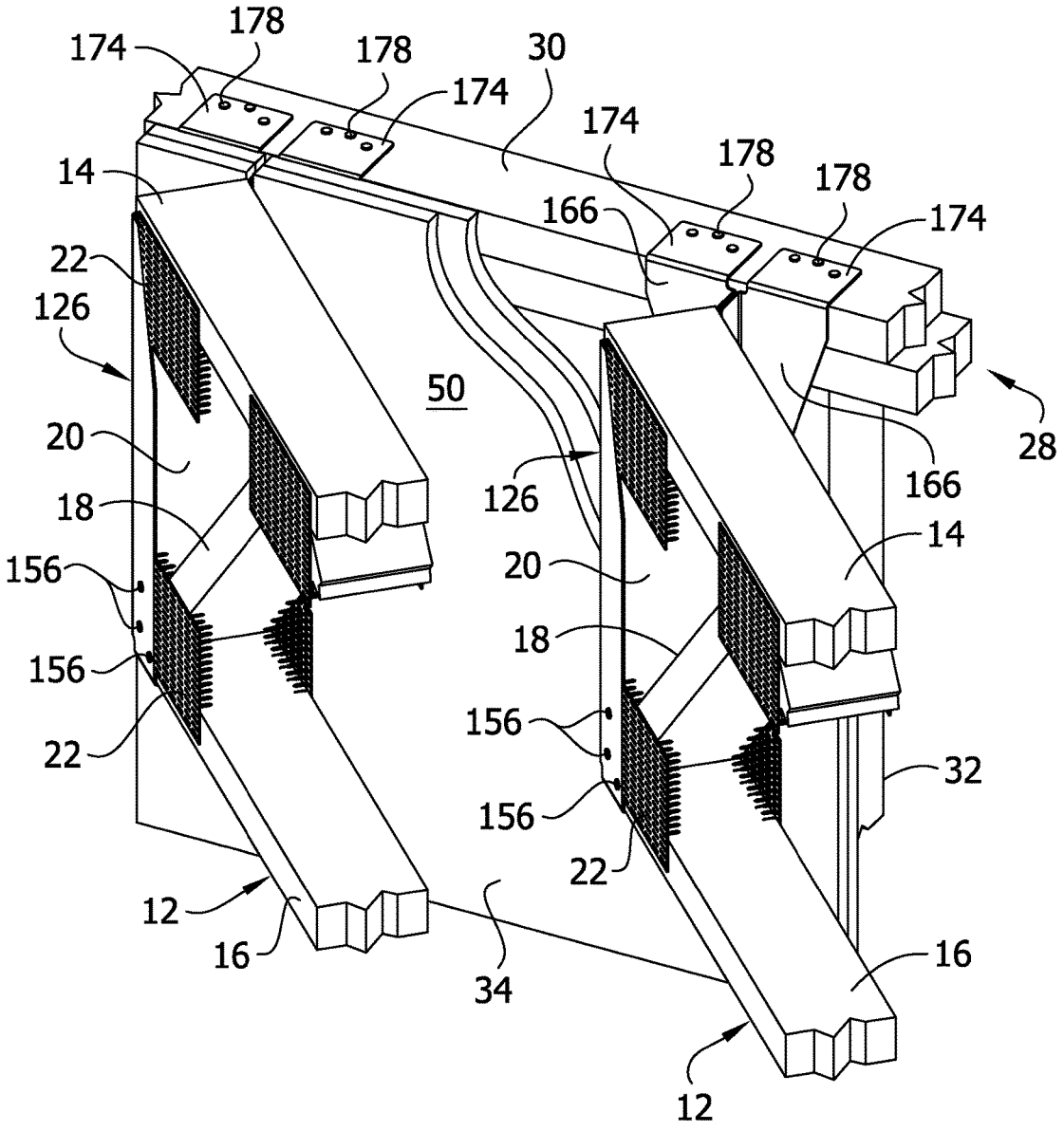
178
174
178
30
174
174
178
178
14
166
174
22
126
50
28
20
126
166
18
14
156
20
18
156
156
22
32
156
22
12
16
34
16
12

FIG. 26

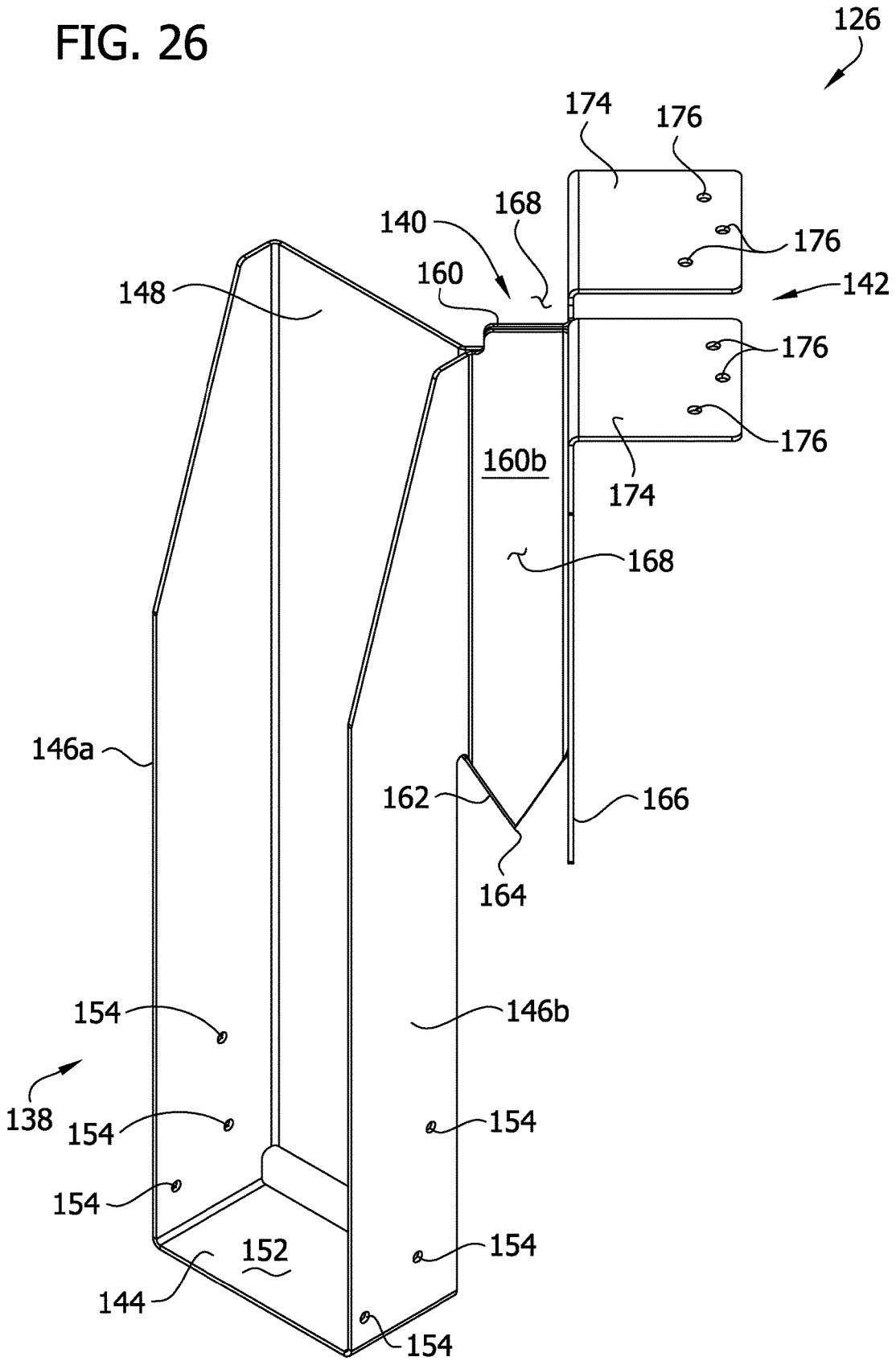
126
174
176
168
140
176
160
142
148
176
176
160b
174
168
146a
162
166
164
154
146b
138
154
154
154
154
152
144
154

FIG. 27

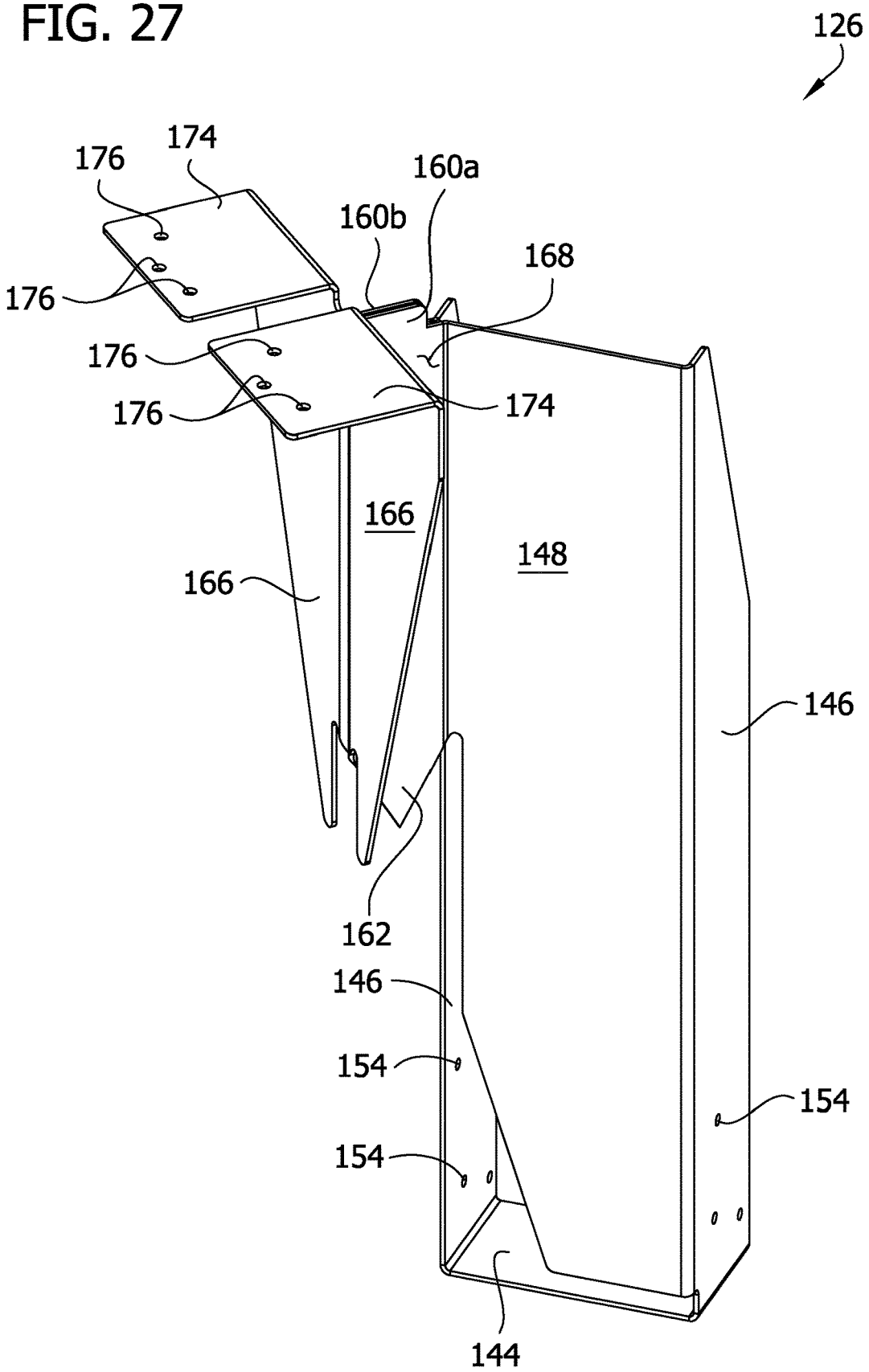
126
174
176
160a
160b
168
176
176
176
174
166
148
166
146
162
146
154
154
154
144

FIG. 28

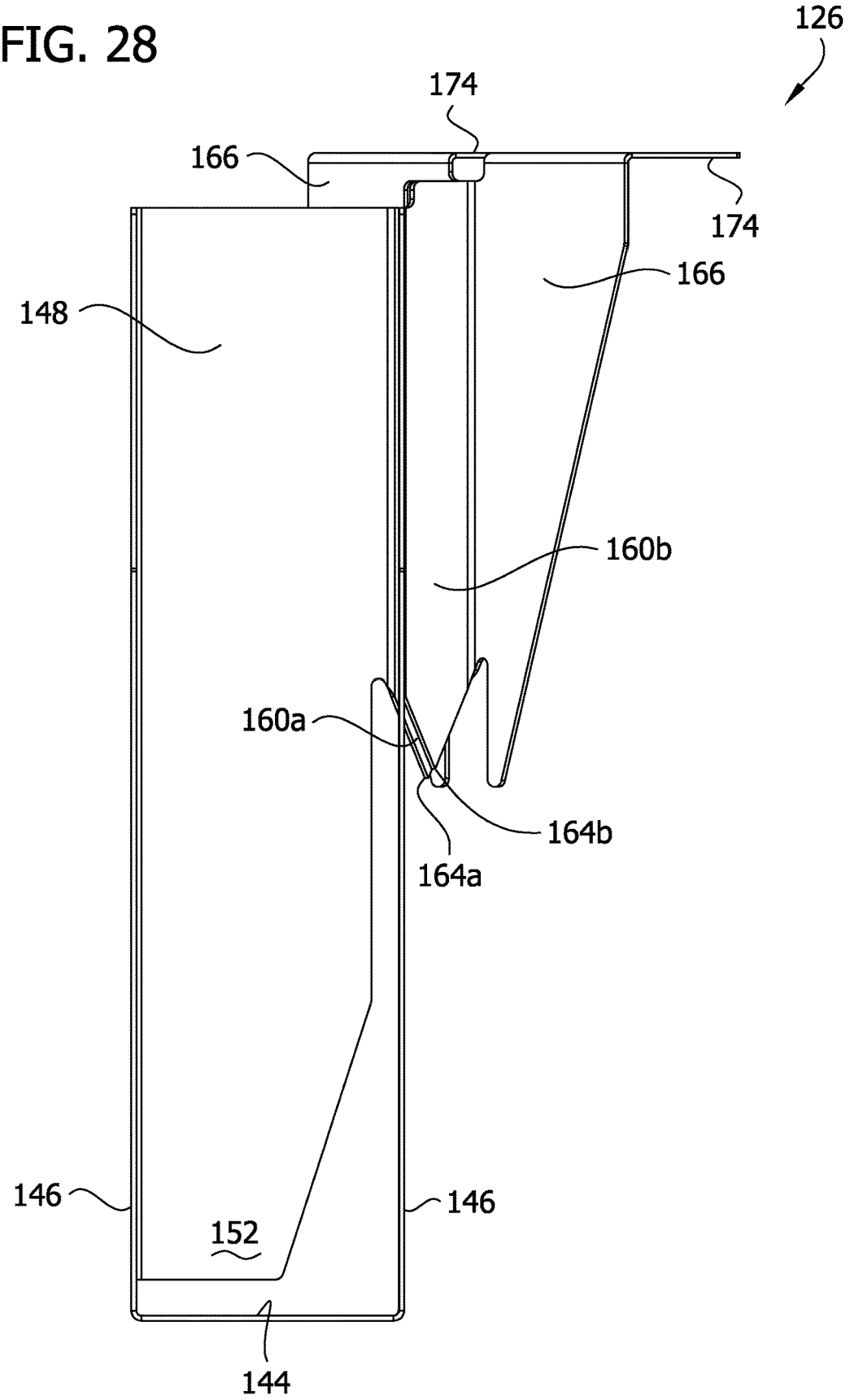

FIG. 29

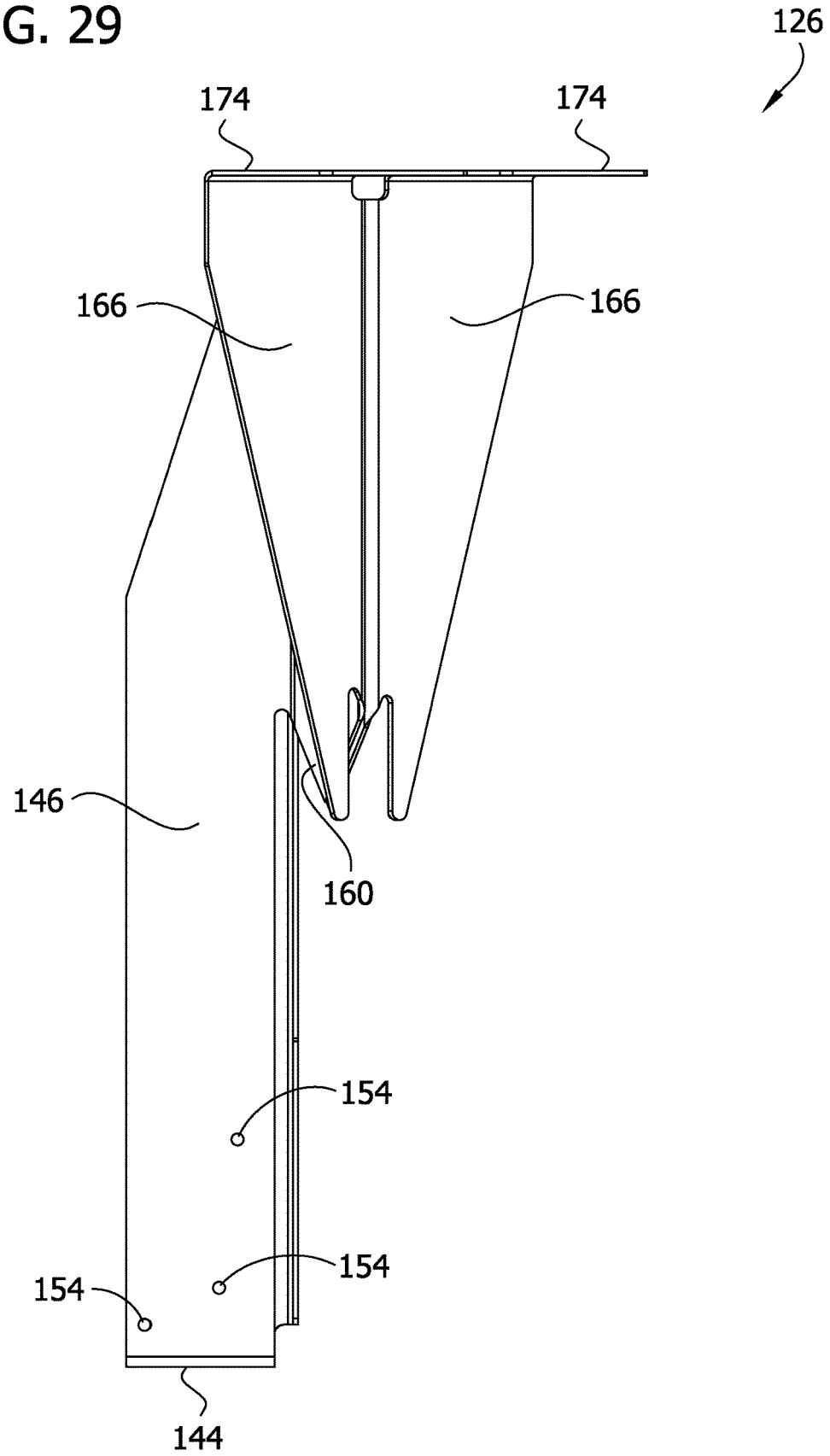

FIG. 30

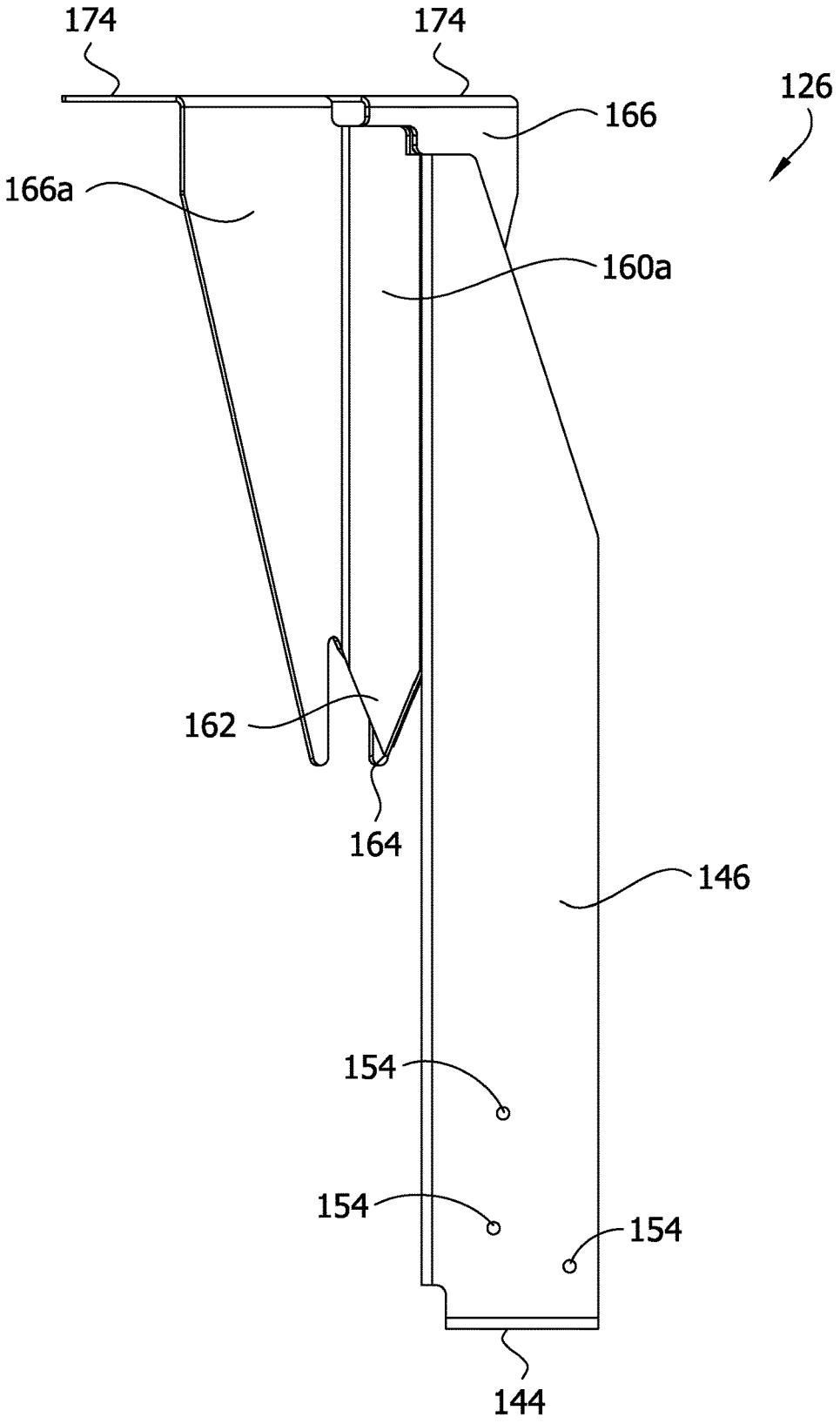

FIG. 31

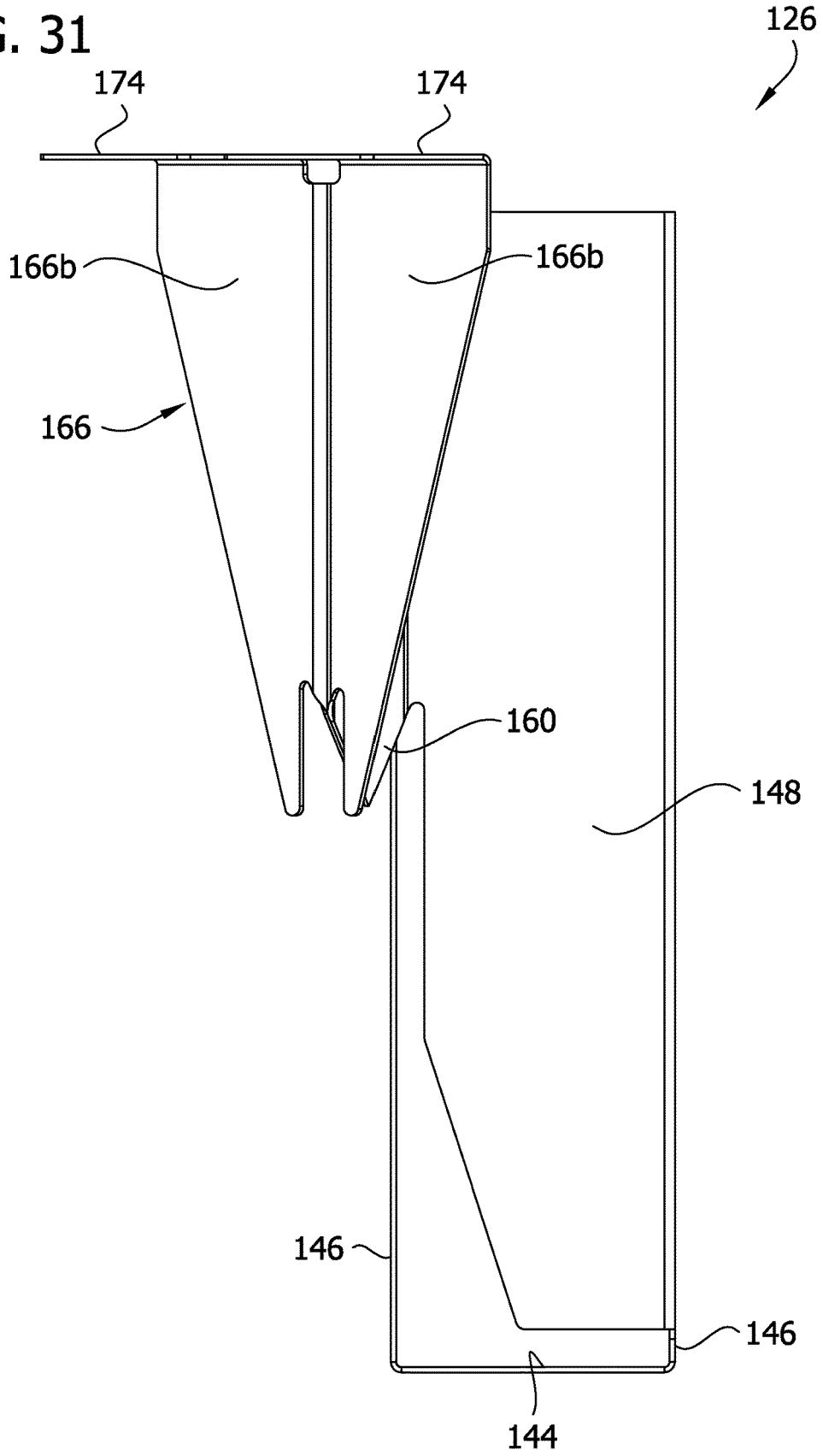

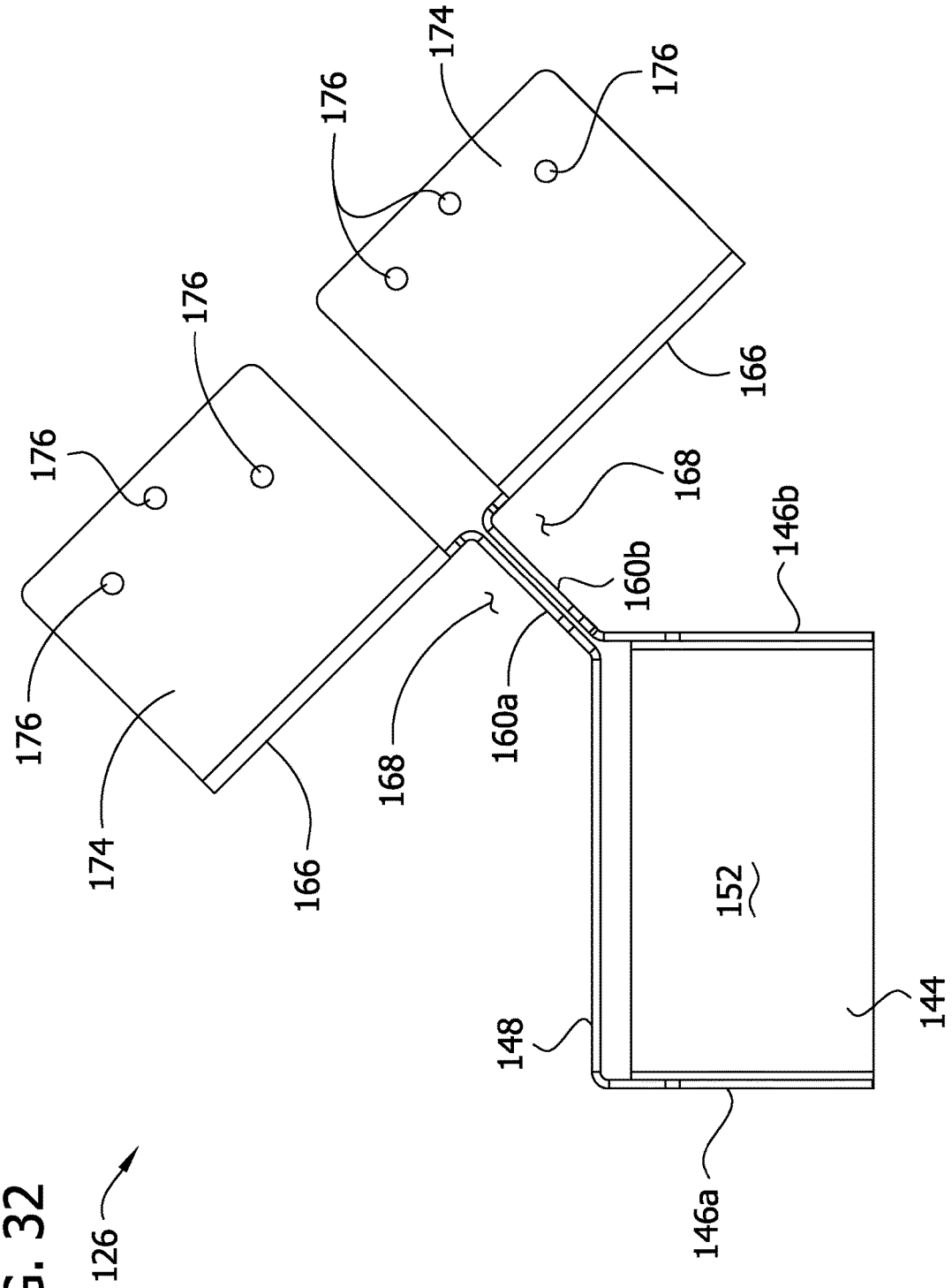
174
176
176
176
176
176
166
168
146b
160b
160a
168
174
166
152
144
148
146a
126

FIG. 32

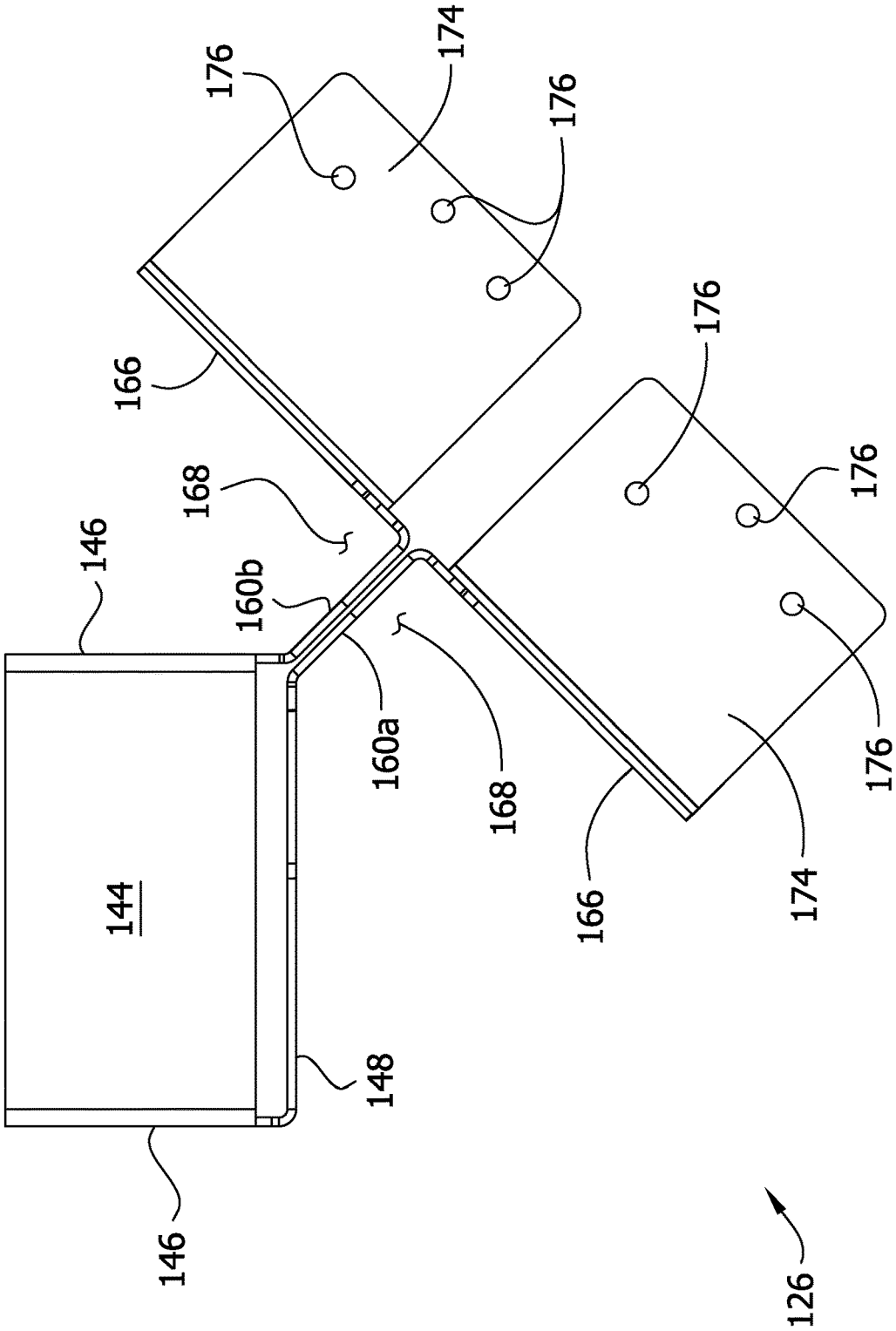
176
174
176
166
168
146
160b
160a
168
144
148
146
176
176
176
166
174
126

FIG. 33

FIG. 34

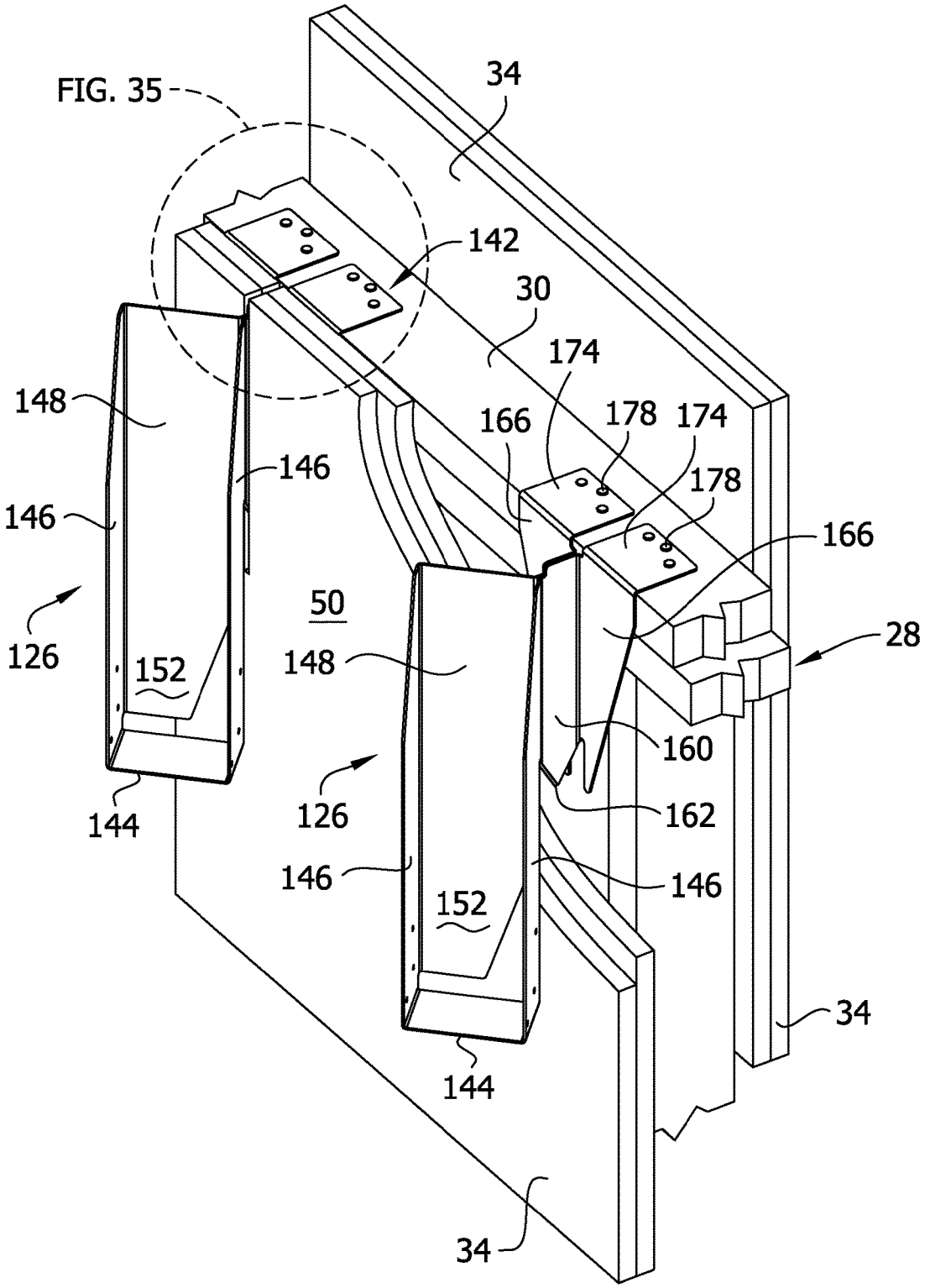
FIG. 35
34
142
30
174
148
166
178
174
146
178
146
166
50
28
126
152
148
160
126
162
144
146
146
152
34
144
34

FIG. 35

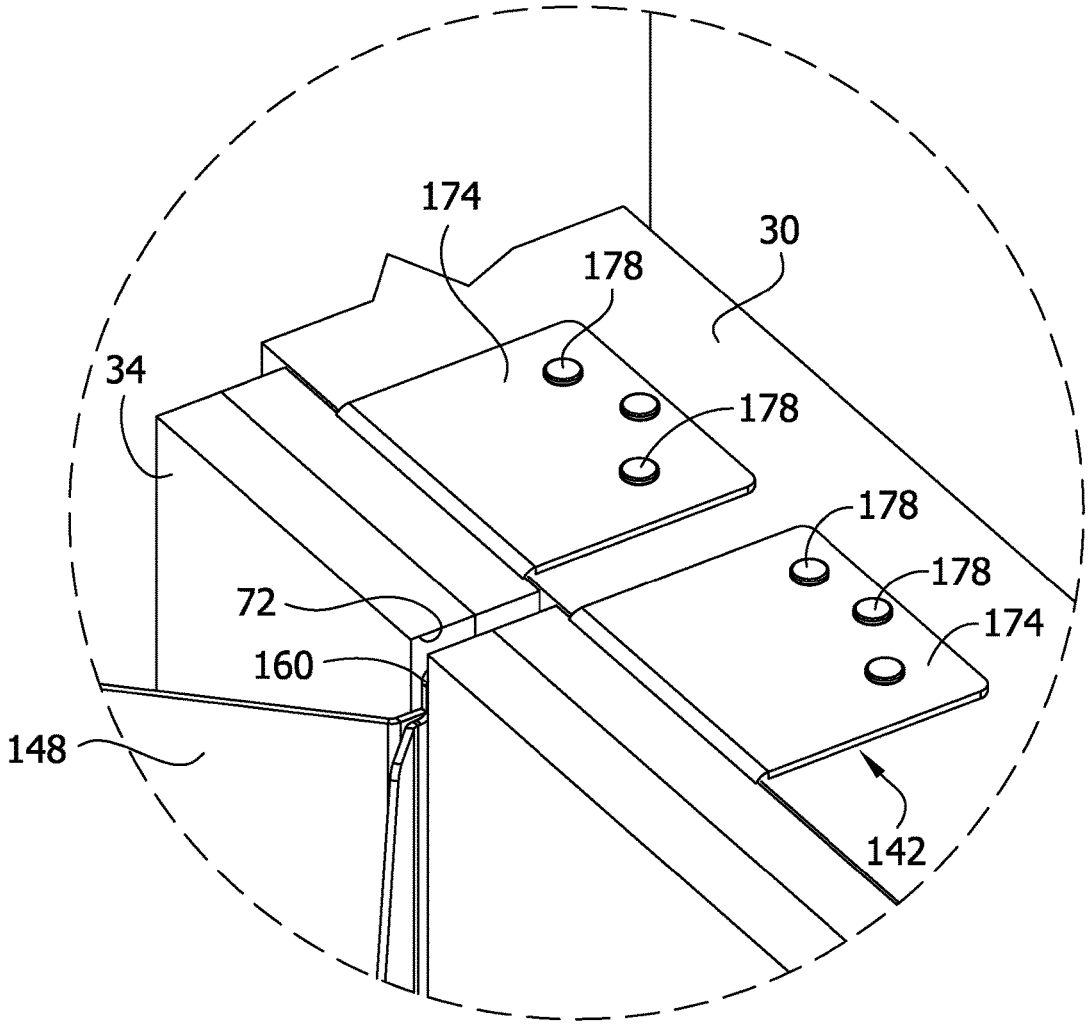

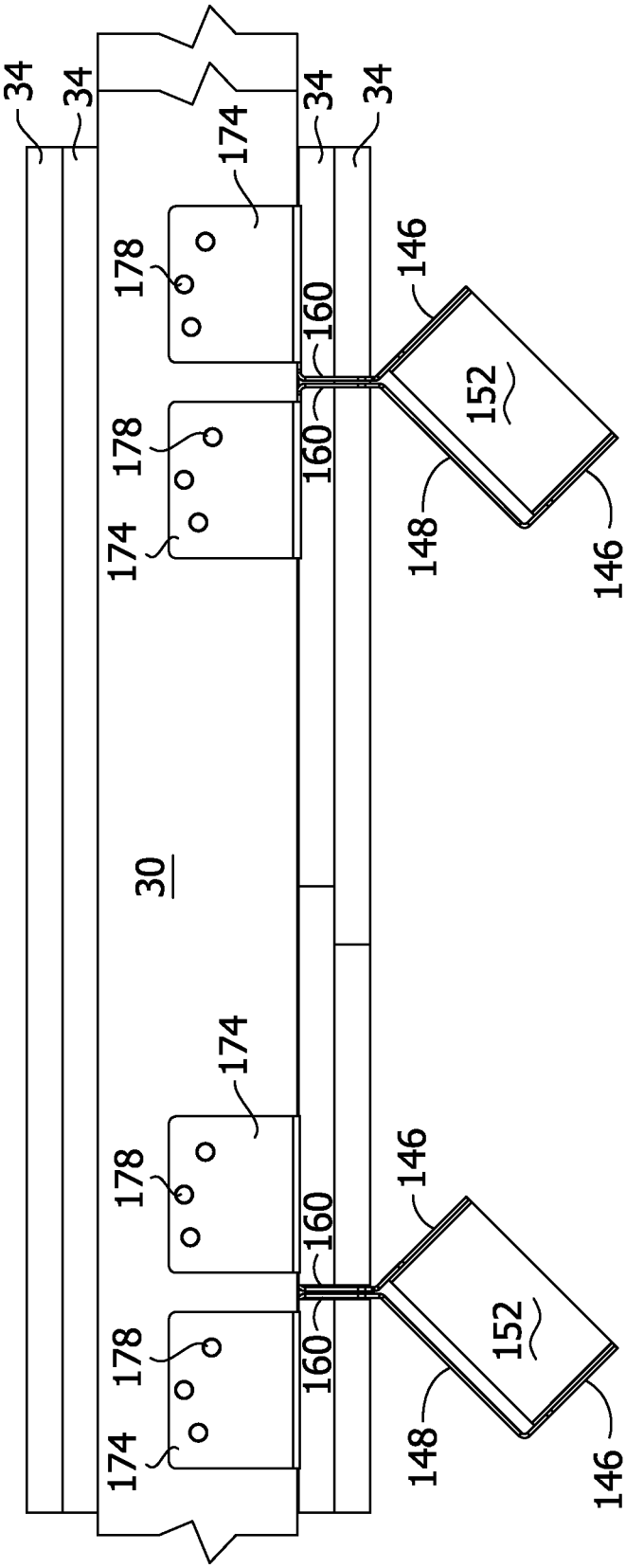
34
34
34
34
174
178
160
146
152
178
160
174
148
146
30
174
178
160
146
152
178
160
174
148
146

FIG. 36

FIG. 37

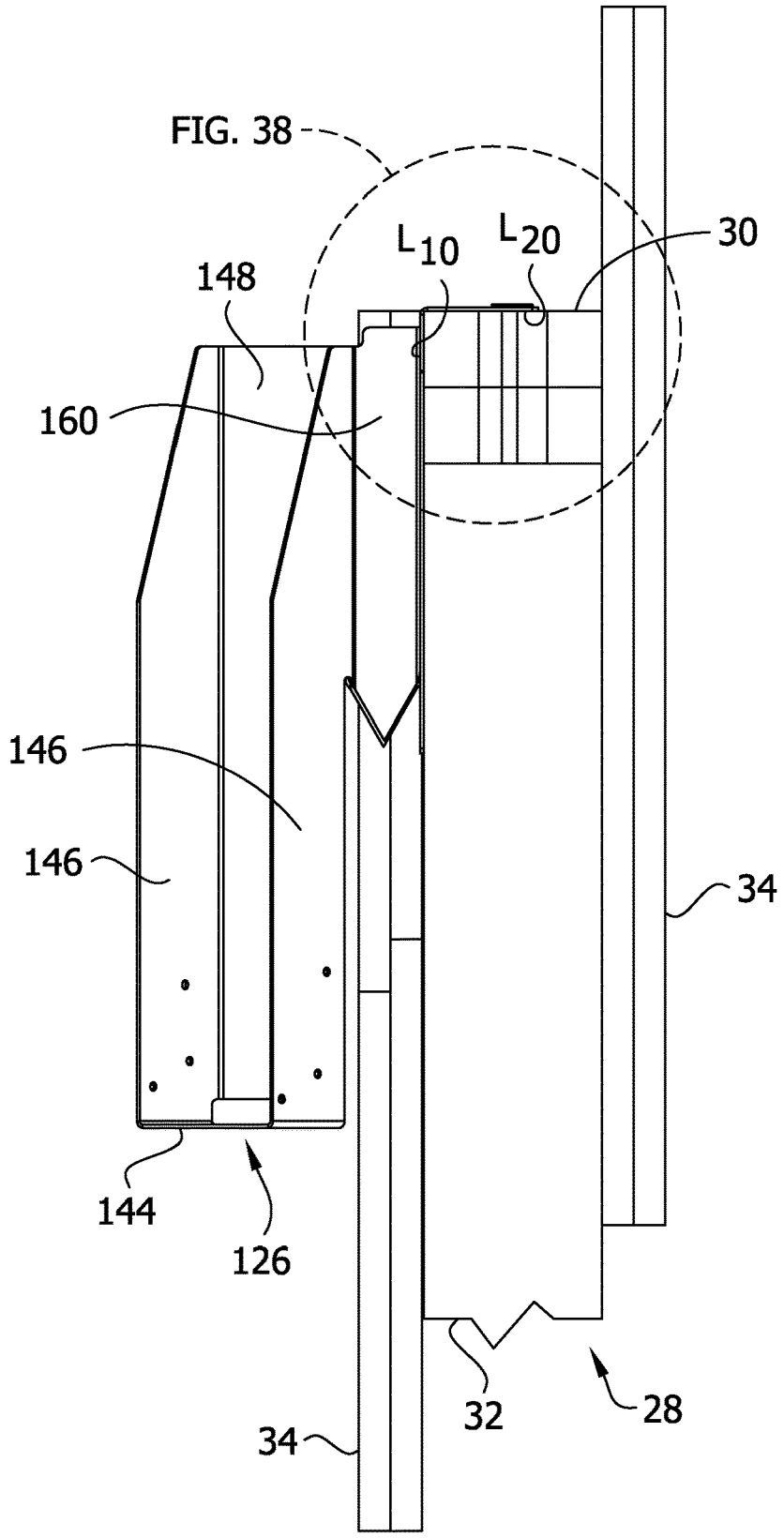

FIG. 38

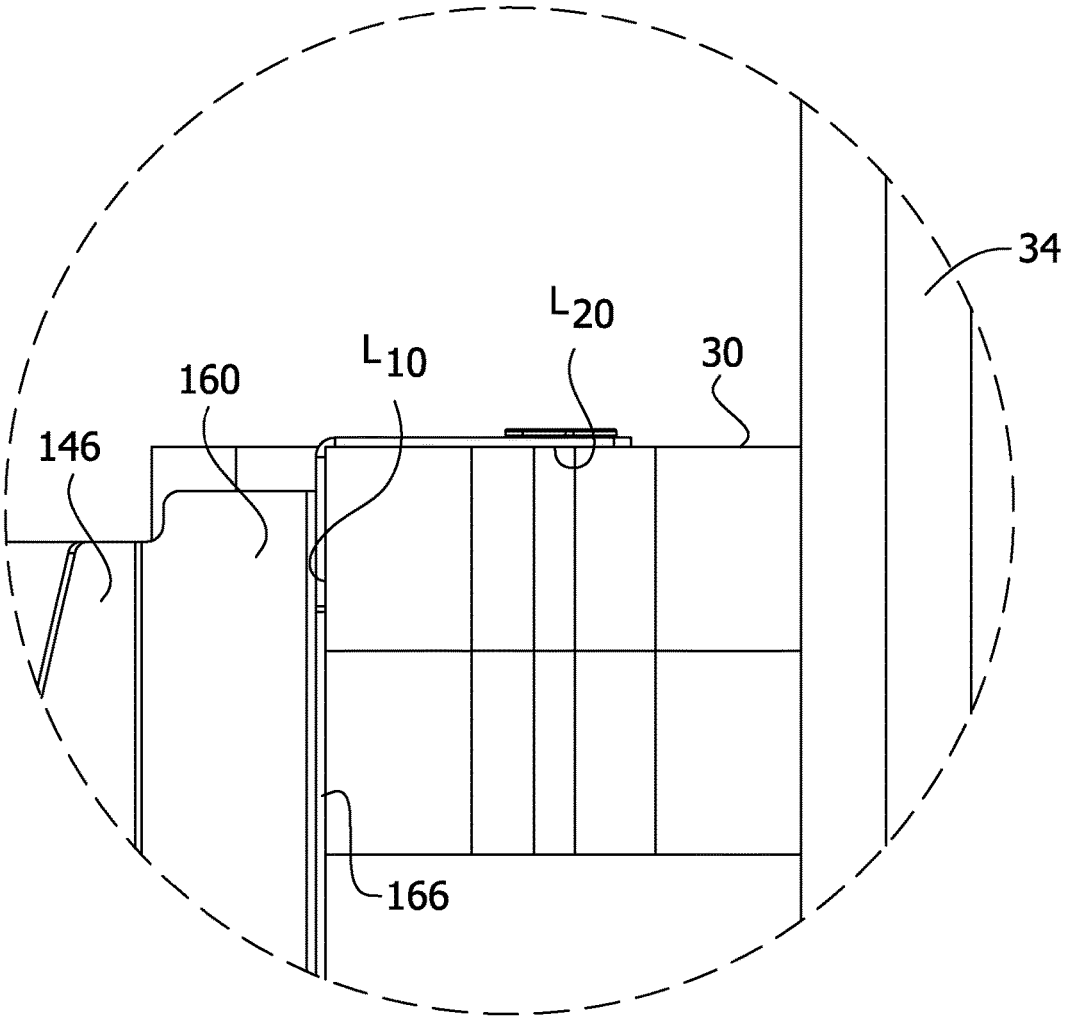

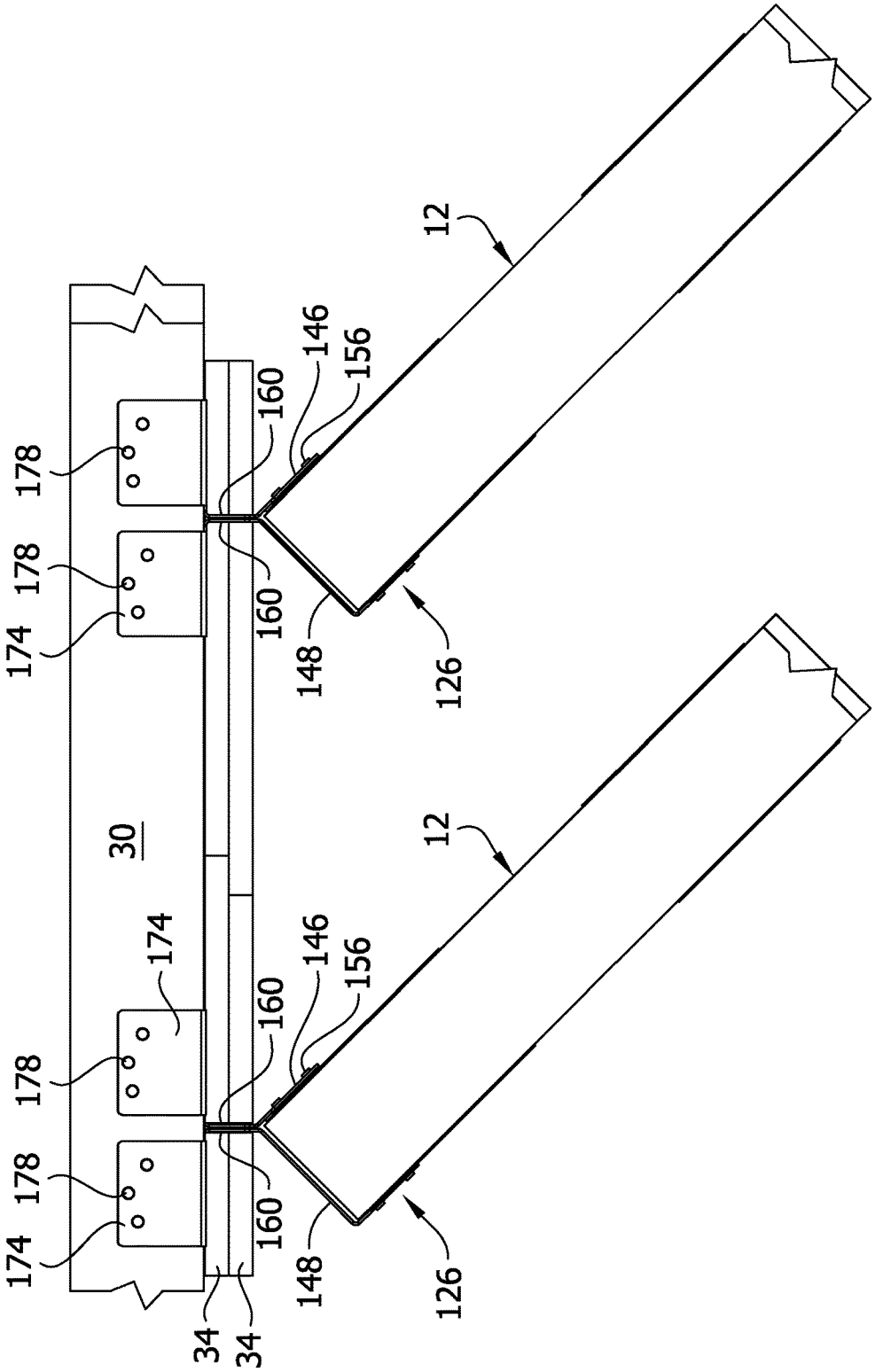
12
146
156
160
178
178
174
160
148
126
30
12
174
146
156
160
178
178
174
160
148
126
34
34

FIG. 39

FIG. 40

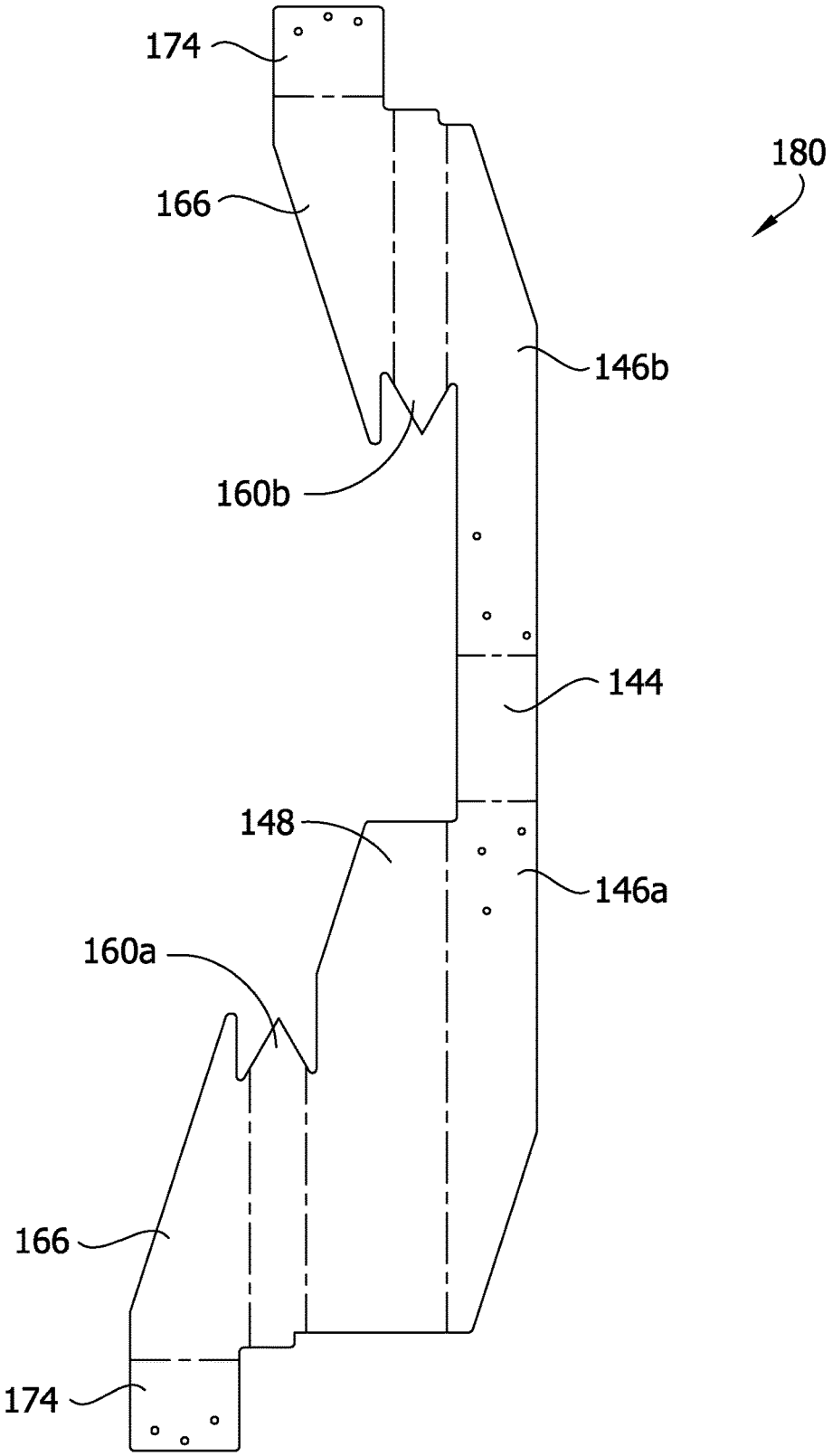

HANGER FOR FIRE SEPARATION WALL

FIELD OF THE INVENTION

The present invention generally relates to connections for structures, and more specifically, a truss hanger for connecting a truss to a wall including fire retardant sheathing.

BACKGROUND

The use of fire separation walls in structures, such as in multifamily housing, is commonplace. Often, fire separation is required to be continuous along the walls between adjoining units to prevent fire from spreading between the adjoining units in a multifamily structure. For some types of construction, the building codes also require exterior walls to be fire rated. Typically, gypsum board is used as a fire retardant sheathing along these walls. Floor trusses or joists are attached to or hung from the walls including the gypsum board, but cannot be hung from the gypsum board itself. The trusses or joists must therefore be attached to the wall framing. A cutout for the entire cross section of the truss leaves a large discontinuity in the fire retardant sheathing. However, building codes require that the fire separation wall maintain a certain fire resistant rating. Thus, the integrity of the fire retardant sheathing should be maintained and interruptions of the sheathing kept to a minimum.

SUMMARY

In one aspect of the present invention, a hanger for connecting a structural component to a wall having sheathing mounted thereon includes a channel-shaped portion configured to receive the structural component. An extension portion extends from the channel-shaped portion and is configured to extend through the sheathing to engage the wall at a first location. A connection portion is configured for attachment to the wall at a second location spaced from the first location.

In another aspect of the present invention, a truss hanger for connecting a truss to a wall having fire resistant sheathing mounted thereon includes a channel-shaped portion configured to receive the truss. The channel-shaped portion includes a base sized and shaped for receiving a truss chord of the truss thereon, side panels extending upward from the base, and back panels. Each back panel extends from a respective one of the side panels. An extension portion extends from the channel-shaped portion and is configured to extend through the fire resistant sheathing. The extension portion includes extension flanges and back flanges. Each of the extension flanges extends from a respective one of the back panels. Each of the back flanges extends from a respective one of the extension flanges. The truss hanger also includes a connection portion configured for attachment to the wall.

A hanger for connecting a structural component to a wall having sheathing mounted thereon generally comprises a channel-shaped portion configured to receive the structural component. An extension portion is configured to be disposed at least partially in the sheathing. A connection portion is configured for attachment to the wall.

Other objects and features will be in part apparent and in part pointed out hereinafter.

BRIEF DESCRIPTION OF THE DRAWINGS

FIG. **1** is a fragmentary perspective of adjacent floor trusses connected to a wall having fire retardant sheathing by truss hangers that extend through the sheathing;

FIG. **2** is a perspective of a truss hanger according to a first embodiment of the present invention;

FIG. **2**A is a rear perspective of the truss hanger;

FIG. **3** is a front elevation thereof;

FIG. **4** is a right side elevation thereof;

FIG. **5** is a left side elevation thereof;

FIG. **6** is a rear elevation thereof;

FIG. **7** is a top plan thereof;

FIG. **8** is a bottom plan thereof;

FIG. **9** is a perspective of a wall having fire retardant sheathing with a slot cut in the sheathing to receive the truss hanger;

FIG. **10** is the perspective of FIG. **9**, but showing two of the truss hangers mounted thereon;

FIG. **10**A is an enlarged fragmentary perspective of FIG. **10**;

FIG. **11** is a top plan of FIG. **10**, illustrating the truss hanger extending through the fire retardant sheathing;

FIG. **12** is a perspective similar to FIG. **10**, but showing a floor truss positioned for mounting in the truss hanger;

FIG. **13** is a side elevation of FIG. **12**;

FIG. **13**A is an enlarged fragmentary perspective of FIG. **13** with a portion of the fire retardant sheathing broken away;

FIG. **14** is the perspective of FIG. **10**, but showing floor trusses mounted in the truss hangers;

FIG. **14**A is an enlarged fragmentary perspective of FIG. **14**;

FIG. **15** is a top view of a stamped metal blank for forming a truss hanger according to the present invention;

FIG. **16** is a perspective of a slot template for use in cutting the slot in the sheathing to receive the truss hanger;

FIG. **17** is a rear perspective of the slot template;

FIG. **18** is a front elevation thereof;

FIG. **19** is a right side elevation thereof;

FIG. **20** is a left side elevation thereof;

FIG. **21** is a rear elevation thereof;

FIG. **22** is a top plan thereof;

FIG. **23** is a bottom plan thereof;

FIG. **24** is a front view of a stamped metal blank for forming the slot template;

FIG. **25** is a fragmentary perspective of adjacent floor trusses connected at an angle to a wall having fire retardant sheathing by truss hangers of a second embodiment that extend through the sheathing;

FIG. **26** is a perspective of one of the truss hangers of FIG. **25**;

FIG. **27** is a rear perspective thereof;

FIG. **28** is a front elevation thereof;

FIG. **29** is a right side elevation thereof;

FIG. **30** is a left side elevation thereof;

FIG. **31** is a rear elevation thereof;

FIG. **32** is a top plan thereof;

FIG. **33** is a bottom plan thereof;

FIG. **34** is a perspective of a wall and the two truss hangers mounted thereon with parts broken away;

FIG. **35** is an enlarged fragmentary perspective of FIG. **34**;

FIG. **36** is a top plan of FIG. **34**, illustrating the truss hangers extending through the fire retardant sheathing;

FIG. **37** is a side elevation of FIG. **34**;

FIG. **38** is an enlarged fragment of FIG. **37**;

FIG. **39** is a top plan similar to FIG. **36**, but showing a floor truss mounted in each truss hanger; and

FIG. **40** is a front view of a stamped metal blank for forming a truss hanger according to the present invention.

Corresponding reference characters indicate corresponding parts throughout the drawings.

DETAILED DESCRIPTION

Referring to FIG. **1**, a first embodiment of a connection system for a fire separation wall is shown generally at **10**. Floor trusses generally indicated at **12** each include truss members (broadly, "wooden structural members") including a top chord **14**, a bottom chord **16**, and web members **18** joining the top and bottom chords. Each floor truss also includes end members **20** at each end joining the top and bottom chords **14**, **16** (only one end of each truss is shown). The truss members can be joined by nail plates **22** or by any other suitable fastening structure. The number and orientations of the web members **18** and chords **14**, **16** may vary from the illustrated embodiment without departing from the scope of the invention, as a truss hanger **26** according to the present invention is readily applicable to other truss configurations (e.g. a roof truss). Moreover, the hanger **26** may be used to connect structural components other than trusses to a wall or other part of a structure. The hanger can be used to support other wood framing members such as solid sawn or structural composite lumber.

As seen in FIG. **1**, a wall **28** includes a top member or plate **30** and support members or studs **32** (only one stud may be seen in FIG. **1**). As illustrated, the top plate **30** is formed by two 2×4's in stacked relation. Fire retardant sheathing **34** is mounted on both sides of the wall **28**, as illustrated. In one embodiment, the fire retardant sheathing is gypsum board, such as two layers of ⅝" gypsum board mounted on each side of the wall **28** as illustrated, although other configurations of fire retardant sheathing are within the scope of the present invention. Other wall configurations, including different wall constructions and materials, are within the scope of the present invention. For example, the truss hangers **26** can be used with any wall assembly or fire-rated wall assembly, such as a 2-hour fire-resistive wall assembly. The floor trusses **12** are mounted on the wall **28** adjacent the fire retardant sheathing **34** by the truss hangers **26**. The truss hangers **26** extend through a narrow slot in the fire retardant sheathing **34** to maintain the integrity and fire retardant characteristics of the fire separation wall.

Referring to FIGS. **2-8**, the truss hanger **26** includes a channel-shaped portion **38**, an extension portion **40**, and a connection portion **42**. The channel-shaped portion **38** is configured to receive the floor truss **12**. The channel-shaped portion **38** includes a seat or base **44** and a pair of side panels **46** extending upward from the base. When installed, the base **44** is generally horizontal, and the side panels **46** extend generally vertical from the base. A back panel **48** extends from each of the side panels **46**. Each back panel **48** is generally perpendicular to both the side panels **46** and the base **44**. When installed, each back panel **48** extends generally parallel to an interior face **50** of the fire retardant sheathing **34**. The base **44**, side panels **46**, and back panels **48** form a channel **52** configured to receive the floor truss **12**.

As seen in FIGS. **1** and **12-14**A, the floor truss **12** is received in the channel **52** to attach the floor truss to the wall **28**. The bottom chord **16** of the floor truss **12** engages and rests upon (i.e., is supported by) the base **44**. The end member **20** of the floor truss **12** is positioned against the back panels **48** between the side panels **46**. The truss hanger **26** includes fastening structure for attaching the floor truss **12** to the truss hanger. Fastening structure can be of any type known in the art for attaching a connector to a wooden structural member, such as nailing teeth (not shown) struck from the material of the hanger. In the illustrated embodiment, the fastening structure comprises a hole to allow for insertion of a fastening member. More specifically, in one embodiment the fastening structure comprises nail holes **54** in the side panels **46** of the truss hanger **26**, and the fastening member comprises a nail **56** (see FIG. **12**). In the illustrated embodiment, nail holes **54** are positioned on each of the side panels **46** so that nails **56** can be inserted into both the bottom chord **16** and the end member **20** of the floor truss **12** to attach the hanger **26** to the floor truss **12**.

Referring again to FIGS. **2-8**, the extension portion **40** includes two extension flanges **60** configured to extend through the fire retardant sheathing **34**. Each flange **60** extends from one of the back panels **48**. The flanges **60** are positioned in opposed, face-to-face relation, and preferably engage each other along a juncture. Each flange **60** extends generally perpendicular from the corresponding back panel **48** and generally parallel to the side panels **46**. At a bottom edge, each flange **60** includes a driving point **62**. Each of the driving points **62** is generally triangular and includes a pointed tip **64**. As seen in FIGS. **3** and **6**, the tips **64** of the driving points **62** are vertically offset from each other. As illustrated, the tip **64***a* of one flange **60***a* extends vertically below the tip **64***b* of the other flange **60***b*. In one embodiment, the tips **64** are vertically offset from each other about ⅛", although other configurations are within the scope of the present invention, such as tips that are aligned or tips that are offset a smaller or larger amount.

A back flange **66** extends from each of the extension flanges **60**. Each back flange **66** extends generally perpendicular from the extension flange **60** and is oriented generally parallel to the back panels **48**. Referring to FIG. **13**A, the back flanges **66** engage the wall **28** at a first location L_1, which in the illustrated embodiment is a vertical face of the top plate **30** of the wall. The back panels **48**, extension flanges **60**, and back flanges **66** form a pair of sheathing channels **68**. Each sheathing channel **68** is configured to receive a portion of the fire retardant sheathing **34** to secure the sheathing between the hanger **26** and the wall **28**. As seen in FIG. **7**, the sheathing channels **68** extend generally perpendicular to the truss-receiving channel **52**.

As seen in FIGS. **10**A and **11**, the extension flanges **60** extend through a slot **72** in the fire retardant sheathing **34**. Preferably, the slot has an area less than or equal to 6 square inches, and the gap between the extension flanges **60** and the edge of the slot **72** is less than or equal to ⅛". The driving points **62** extend down into the sheathing **34** to further secure the sheathing between the hanger **26** and the wall **28**. A portion of the fire retardant sheathing **34** extends into each sheathing channel **68** and is secured between the back panels **48** and the back flanges **66**.

In one embodiment, the slot **72** in the fire retardant sheathing **34** can be made using a slot template **82** (FIGS. **16-24**). The slot template **82** includes a vertical panel **84** having a rear face **86** configured to engage the interior face **50** of the fire retardant sheathing **34** and a horizontal panel **88** having a bottom face **90** configured to engage a top face of the sheathing. The horizontal panel **88** extends generally perpendicular from the vertical panel **84**. The slot template **82** is configured to be quickly fixed in position on the sheathing **34** for use in cutting the slot **72** to receive the truss hanger **26**. Portions of the slot template **82** are configured to be pressed into the sheathing **34** to locate the template on the sheathing and retain the template in position for cutting the slot **72**. In the illustrated embodiment, the horizontal panel includes prongs **92** that are bent downward for insertion into the top face of the sheathing **34**. Bottom corners **94** of the

vertical panel **84** are bent rearward for insertion into the interior face **50** of the sheathing **34**. The prongs **92** and the corners **94** are inserted into the sheathing **34** to retain the template **82** in position for cutting the slot **72**. In addition, the vertical panel **84** optionally includes dimples **96** extending toward the rear face **86** of the vertical panel **84**. The dimples **96** ensure the vertical panel **84** remains slightly spaced from the interior face **50** of the sheathing **34** so the template **82** can be easily removed from the sheathing after the slot **72** is cut.

The template **82** includes a guide slot **98** to guide a cutting tool in cutting the slot **72** in the sheathing **34**. The guide slot **98** extends from a top edge of the vertical panel **84** to a location spaced from a bottom edge of the vertical panel. As illustrated, the guide slot **98** includes a wide, rectangular portion **98***a* in the horizontal panel **88** to ease insertion of a cutting tool into the guide slot. A converging portion **98***b* of the slot **98** in the vertical panel **84** transitions from the wide portion **98***a* to a narrow lower portion **98***c* of the slot. This facilitates entry of the cutting tool into the narrow portion **98***c*. The narrow portion **98***c* of the guide slot **98** is dimensioned to facilitate cutting the slot **72** in the sheathing **34** to a size configured to receive the extension flanges **60** of the truss hanger **26**.

As seen in FIG. **24**, the template **82** described above can be formed as one piece from a metal blank **100** that is stamped from a sheet metal roll and bent into shape. In one embodiment, the template **82** is stamped from 16 gauge steel, although other thicknesses (e.g., 12-18 gauge) and other suitable materials are within the scope of the present invention.

In use, the template **82** is placed on the sheathing **34** in a selected location for a slot **72**. The template can be used to cut the slot **72** in the sheathing **34** either before or after the sheathing is mounted on the wall **28**. The prongs **92** and corners **94** are inserted into the sheathing **34** by tapping with a hand or striking with a hammer or other blunt instrument. Once the template **82** is secured in position on the sheathing **34**, a cutting tool (e.g., a drywall cutout tool) is inserted into the guide slot **98** to cut a slot **72** in the sheathing at the location of the guide slot. In one embodiment, a drywall cutout tool with a ⅛" or ¼" spiral bit is used to cut the slot **72**, although other cutting tools are within the scope of the present invention. After the slot **72** is cut in the sheathing **34**, the template **82** is removed from the sheathing. The sheathing **34** is then configured to receive the truss hanger **26**.

Referring again to FIGS. **2-8**, the connection portion of the hanger includes a pair of connector tabs **74** extending from the back flanges **66**. Each connector tab **74** extends generally perpendicular from one of the back flanges **66**. The connector tabs **74** are generally horizontal when the hanger **26** is installed. The connector tabs **74** are configured to engage an upper surface of the top plate **30** of the wall **28** at a second location L_2 spaced from the first location L_1. The connector tabs **74** can be used to attach the truss hanger **26** to the wall, thereby hanging the floor trusses **12** from the wall. As seen in FIG. **1**, the connector tabs **74** extend over a portion of the top plate **30** of the wall **28**. Each connector tab **74** includes fastening structure, such as nail holes **76**, for insertion of a fastening member, such as nails **78** (see FIGS. **10** and **10**A), to attach the hanger **26** to the wall **28**. In the illustrated embodiment, each connector tab **74** includes three nail holes **76**. Other configurations are within the scope of the present invention, such as a different number of nail holes, or alternate fastening structure such as nailing teeth or other appropriate structure for fastening the hanger to the wall.

The base **44** and back flanges **66** of the truss hanger **26** cooperate to stabilize the truss hanger **26** and protect the fire retardant sheathing **34** under the loads transferred from the truss **12** to the wall **28** by way of the hanger. The channel **52** that receives an end portion of the truss **12** is spaced to the interior of the wall **28** and more particularly to the interior of the second location L_2 where the connector tabs **74** are attached to an upper surface of the top plate **30**. The vertically downward load of the truss **12** applied to the base **44** of the truss hanger **26** urges the truss hanger **26** to pivot so that the base would move toward the wall **28**, which could damage the fire retardant sheathing **34** and pry out the nails **78** connecting the connector tabs **74** to the upper surface of the top plate **30**. However, this motion is resisted by the engagement of the back flanges **66** with the interior vertical face of the top plate **30** at the first location L_1. Thus, there is a force couple between the base **44** of the hanger **26** carrying the vertical load of the truss **12** and the back panels **48** of the hanger (via engagement of the back flanges **66** with the top plate **30**) engaging the end face of the truss. Accordingly, the truss hanger **26** and truss **12** are stable with minimal disruption of the fire retardant sheathing **34**, even though the truss is held at a distance from the wall **28** by the truss hanger.

As seen in FIG. **15**, a truss hanger **26** as described above can be formed as one piece from a metal blank **80** that is stamped from a sheet metal roll and bent into shape. In one embodiment, the truss hanger **26** is stamped from 12-14 gauge steel, although other suitable materials are within the scope of the present invention. The configuration of the truss hanger **26** of the present invention allows a lighter gauge metal to be used.

In use, the truss hanger **26** is positioned in the slot **72** of the fire retardant sheathing **34** mounted on the wall **28**. As seen in FIGS. **9-14**A, one method of using the truss hanger **26** includes cutting the slot **72** in the fire retardant sheathing **34** (either before or after the sheathing is mounted on the wall). In one embodiment, the slot **72** can be cut using the slot template **82** (either before or after the sheathing **34** is mounted to the wall **28**). The slot can be any suitable length, and in one embodiment is about 10 inches long. The truss hanger **26** is then positioned against the fire retardant sheathing **34** so that the extension flanges **60** extend through the slot **72**. In one embodiment, the hanger **26** is slid downward into place so that the extension flanges **60** extend through the slot **72**, the back flanges **66** are positioned adjacent the wall **28**, and the fire retardant sheathing **34** is positioned in the sheathing channels **68** between the back flanges and the back panels **48**. The hanger connector tabs **74** are fastened to the top plate **30** of the wall **28** by any suitable means, such as by inserting nail **78** through the nail holes **76**. Then, a truss member, e.g. truss bottom chord **16**, is positioned in the truss channel **52** of the hanger **26** (see FIG. **1**), thereby securing the floor truss **12** to the wall **28**. The truss hanger **26** is then fastened to the truss **12** by any suitable means, such as by inserting nails **56** through the nail holes **54** in each side panel **46** of the hanger. The hanger **26** is thus secured to both the truss **12** and the wall **28**, with the fire retardant sheathing **34** secured between the hanger and the wall.

In another embodiment, the truss hangers **26** can be installed without pre-forming the slot **72** in the fire retardant sheathing **34**. More particularly, each hanger **26** can be driven into the sheathing **34**. The driving point **62** of the hanger **26** is positioned against a top edge of the fire retardant sheathing. The hanger **26** is then driven downward into the sheathing **34**, led by the pointed tip **64**. The hanger

26 continues to be driven into the gypsum boards until the connector tabs **74** engage the upper surface of the top plate **30**. In this way, the hanger **26** forms the slot in the sheathing **34**.

In still another embodiment, the truss hangers **26** can be installed on the wall **28** before the sheathing **34** is mounted on the wall. This simplifies construction by allowing the building to be completely framed and roofed before requiring the sheathing **34** to be installed. Trade workers (e.g., mechanical, electrical) therefore have complete access to the wall cavity to install components without interference from the sheathing **34**. The truss hanger **26** is positioned against the wall **28** such that the back flanges **66** engage the wall and the connector tabs **74** engage the top plate **30**. The connector tabs **74** are fastened to the top plate **30** of the wall by any suitable means, such as by inserting nails **78** through nail holes **76**. Then, a truss **12** is positioned in the truss channel **52** of the hanger **26**. The truss hanger is fastened to the truss **12** by any suitable means, such as by inserting nails **56** through the nail holes **54** in each side panel **46** of the hanger **26**. The floor truss **12** is thereby secured to the hanger **26** and the wall **28**, and access to the wall cavity remains unhindered by sheathing. Subsequently, the sheathing **34** can be mounted on the wall **28** by moving the sheathing upward into place so that the extension flanges **60** of the hanger **26** extend through the slot **72** of the sheathing and the sheathing is positioned in the sheathing channels **68** between the back flanges **66** and the back panels **48**.

Referring to FIGS. **25-40**, a second embodiment of a truss hanger **126** for use in mounting the floor truss **12** to the wall **28** is illustrated. The truss hanger **126** is similar to the truss hanger **26** described above, with differences as pointed out herein. Where the truss hanger **26** is configured for mounting the floor truss **12** generally orthogonal to the wall **28**, the truss hanger **126** is configured for mounting the floor truss **12** in a skewed position relative to the wall.

Referring to FIGS. **26-33**, the truss hanger **126** includes a channel-shaped portion **138**, an extension portion **140**, and a connection portion **142**. The channel-shaped portion **138** is configured to receive the floor truss **12**. The channel-shaped portion **138** is configured to support the floor truss **12** at a non-orthogonal angle relative to the wall **28**. In this skewed embodiment, the channel-shaped portion **138** is offset from the extension portion **140**. The channel-shaped portion **138** includes a seat or base **144** and a pair of side panels **146** extending upward from the base. When installed, the base **144** is generally horizontal, and the side panels **146** extend generally vertical from the base. A back panel **148** extends from one of the side panels **146***a* toward the opposing side panel **146***b*. The back panel **148** is generally perpendicular to both the side panels **146** and the base **144**. When installed, the back panel **148** extends at a non-orthogonal angle (e.g., about 45°) to the interior face **50** of the fire retardant sheathing **34**. The base **144**, side panels **146**, and back panel **148** form a channel **152** configured to receive the floor truss **12**. Other configurations are within the scope of the present invention. For example, the truss hanger **126** can be configured to support the floor truss **12** at a range of different angles with respect to the wall **28**.

As seen in FIGS. **25** and **39**, the floor truss **12** is received in the channel **152** to attach the floor truss to the wall **28** at a skewed angle. The bottom chord **16** of the floor truss **12** engages and rests upon (i.e., is supported by) the base **144**. The end member **20** of the floor truss **12** is positioned against the back panel **148** between the side panels **146**. The truss hanger **126** includes fastening structure for attaching the floor truss **12** to the truss hanger. Fastening structure can be of any type known in the art for attaching a connector to a wooden structural member, such as nailing teeth (not shown) struck from the material of the hanger. In the illustrated embodiment, the fastening structure comprises a hole to allow for insertion of a fastening member. More specifically, in one embodiment the fastening structure comprises nail holes **154** in the side panels **146** of the truss hanger **126** (see, FIG. **26**), and the fastening member comprises a nail **156** (see, FIG. **25**). In the illustrated embodiment, nail holes **154** are positioned on each of the side panels **146** so that nails **156** can be inserted into both the bottom chord **16** and the end member **20** of the floor truss **12** to attach the hanger **126** to the floor truss.

Referring again to FIGS. **26-33**, the extension portion **140** includes two extension flanges **160** configured to extend through the fire retardant sheathing **34**. One of the flanges **160***a* extends from the back panel **148**. The other flange **160***b* extends from the side panel **146***b*. The flanges **160** are positioned in opposed, face-to-face relation, and preferably engage each other along a juncture. At a bottom edge, each flange **160** includes a driving point **162**. Each of the driving points **162** is generally triangular and includes a pointed tip **164**. As seen in FIG. **28**, the tips **164** of the driving points **162** are vertically offset from each other. As illustrated, the tip **164***a* of one flange **160***a* extends vertically below the tip **164***b* of the other flange **160***b*. In one embodiment, the tips **164** are vertically offset from each other about ⅛", although other configurations are within the scope of the present invention, such as tips that are aligned or tips that are offset a smaller or larger amount.

A back flange **166** extends from the extension flange **160** generally perpendicular from the extension flange. Referring to FIG. **38**, the back flange **166** engages the wall **28** at a first location L_{10}, which in the illustrated embodiment is a vertical face of the top plate **30** of the wall behind the fire retardant sheathing **34**. The back flange **166** comprises a back flange portion **166***a* bent from the extension flange **160***a* and a back flange portion **166***b* bent from the extension flange **160***b*. The back panel **148**, side panel **146***b*, extension flanges **160**, and back flange **166** form a pair of sheathing channels **168** (see, FIG. **32**). Each sheathing channel **168** is configured to receive a portion of the fire retardant sheathing **34**.

As seen in FIGS. **34-36**, the extension flanges **160** extend through the slot **72** in the fire retardant sheathing **34**. Preferably, the slot has an area less than or equal to 6 square inches, and the gap between the extension flanges **60** and the edge of the slot **72** is less than or equal to ⅛". The driving points **162** extend down into the sheathing **34** to engage the sheathing and further secure the sheathing between the hanger **126** and the wall **28**. A portion of the fire retardant sheathing **34** extends into each sheathing channel **168** and is secured against the back flange **166**.

Referring again to FIGS. **26-33**, the connection portion **142** of the hanger **126** includes a pair of connector tabs **174** extending from the back flange portions **166***a*, **166***b*. Each connector tab **174** extends generally perpendicular from a respective one of the back flanges **166***a*, **166***b*. The connector tabs **174** are generally horizontal when the hanger **126** is installed. The connector tabs **174** are configured to overlie and engage an upper surface of the top plate **30** of the wall **28** at a second location L_{20} spaced from the first location L_{10} (see, FIGS. **37** and **38**). The connector tabs **174** can be used to attach the truss hanger **126** to the wall **28**, thereby hanging the floor trusses **12** from the wall. As seen in FIG. **25**, the connector tabs **174** extend over a portion of the top plate **30** of the wall **28**. Each connector tab **174** includes fastening

structure, such as nail holes **176**, for insertion of a fastening member, such as nails **178** (see FIGS. **34** and **35**), to attach the hanger **126** to the wall **28**. In the illustrated embodiment, each connector tab **174** includes three nail holes **176**. Other configurations are within the scope of the present invention, such as a different number of nail holes, or alternate fastening structure such as nailing teeth or other appropriate structure for fastening the hanger to the wall.

The base **144** and back flanges **166** cooperate to stabilize the truss hanger **126** and protect the fire retardant sheathing **34** from exposure to the loads transferred from the truss **12** to the wall **28** by way of the truss hanger **126**. The channel **152** that receives an end portion of the truss **12** is spaced to the interior of the wall **28** and more particularly to the interior of the second location L_{20} where the connector tabs **174** are attached to an upper surface of the top plate **30** (see FIG. **38**). The vertically downward load of the truss **126** applied to the base **144** of the truss hanger **126** urges the truss hanger to pivot so that the base would move toward the wall **28**, which could damage the fire retardant sheathing **34** and pry out the nails **178** connecting the connector tabs **174** to the upper surface of the top plate **30**. However, this motion is resisted by the engagement of the back flanges **166** with the interior vertical face of the top plate **30** at the first location L_{10}. Thus, there is a force couple between the base **144** and back panel **148** of the hanger **126** (via engagement of the back flanges **166** with the top plate **30**) engaging the end fact of the truss. Accordingly, the truss hanger **126** and truss **12** are stable with minimal disruption of the fire retardant sheathing **34**, even though the truss is held at a distance from the wall **28**.

As seen in FIG. **40**, a truss hanger **126** as described above can be formed as one piece from a metal blank **180** that is stamped from a sheet metal roll and bent into shape. Parts of the blank **180** are labelled with reference numerals corresponding to the various parts of the formed truss hanger **126**. In one embodiment, the truss hanger **126** is stamped from 12-14 gauge steel, although other suitable materials are within the scope of the present invention. The configuration of the truss hanger **126** of the present invention allows a lighter gauge metal to be used.

The truss hanger **126** is used as described above with reference to the truss hanger **26**. In use, the truss hanger **126** is positioned in the slot **72** of the fire retardant sheathing **34** mounted to the wall **28**. One method of using the truss hanger **126** includes cutting the slot **72** in the fire retardant sheathing (either before or after the sheathing is mounted on the wall). In one embodiment, the slot **72** can be cut using the slot template **82** (either before or after the sheathing **34** is mounted to the wall **28**). The slot **72** can be any suitable length, and in one embodiment is about 10 inches long. The truss hanger **126** is then positioned against the fire retardant sheathing **34** so that the extension flanges **160** extend through the slot **72**. In one embodiment, the hanger **126** is slid downward into place so that the extension flanges **160** extend through the slot **72**, the driving point **162** engages the fire retardant sheathing **34**, the back flange **166** is positioned adjacent the wall **28**, and the fire retardant sheathing is positioned in the sheathing channels **168** of the hanger. The hanger connector tabs **174** are fastened to the top plate **30** of the wall **28** by driving nails **178** through the nail holes **176** into the top plate **30**. Then, a truss member, e.g. truss bottom chord **16** is positioned in the truss channel **152** of the hanger **126**. Nails **156** are driven through holes **154** in the side panels **146** to secure the floor truss **12** to the wall **28**. The hanger **126** is thus secured to both the truss **12** and the wall **28**, with the fire retardant sheathing **34** between the hanger and the wall.

In another embodiment, the truss hangers **126** can be installed without pre-forming the slot **72** in the fire retardant sheathing **34**. More particularly, each hanger **126** can be driven into the sheathing **34**. The pointed tip **164** of the driving point **162** of the hanger **126** is positioned against a top edge of the fire retardant sheathing **34**. The hanger **126** is then driven downward into the sheathing **34**, led by the pointed tip **164**. The hanger **126** continues to be driven into the gypsum boards until the connector tabs **174** engage the upper surface of the top plate **30**. In this way, the hanger **126** forms the slot in the sheathing **34**.

In another embodiment, the truss hangers **126** can be installed on the wall **28** before the sheathing **34** is mounted on the wall. This simplifies construction by allowing the building to be completely framed and roofed before requiring the sheathing **34** to be installed. Trade workers (e.g., mechanical, electrical) therefore have complete access to the wall cavity to install components without interference from the sheathing **34**. The truss hanger **126** is positioned against the wall **28** such that the back flange **166** engages the wall and the connector tabs **174** engage the top plate **30**. The connector tabs **174** are fastened to the top plate **30** of the wall by any suitable means, such as by inserting nails **178** through nail holes **176**. Then, a truss **12** is positioned in the truss channel **152** of the hanger **126**. The truss hanger **126** is fastened to the truss **12** by any suitable means, such as by inserting nails **156** through the nail holes **154** in each side panel **146** of the hanger. The floor truss **12** is thereby secured to the hanger **126** and the wall **28**, and access to the wall cavity remains unhindered by sheathing. Subsequently, the sheathing **34** can be mounted on the wall **28** by moving the sheathing upward into place so that the extension flanges **160** of the hanger **126** extend through the slot **72** of the sheathing and the sheathing is positioned in the sheathing channels **168** of the hanger.

The truss hanger **26**, **126** permits a floor truss **12** to be secured to a wall **28** through fire retardant sheathing **34** with minimal interruption to the sheathing. Installation of the truss hanger minimally disrupts the continuity of the sheathing and therefore does not reduce the fire resistive rating of a fire rated assembly. The extension flanges **60**, **160** extend through the fire retardant sheathing **34** so that the sheathing is interrupted only by the slot **72** required to receive the flanges. The back flanges **66**, **166** engage the wall **28** behind the sheathing **34** to stabilize the hanger **26**, **126** and protect the sheathing. The truss hanger **26**, **126** can be mounted on a wall already having sheathing mounted thereon, or can be mounted on a wall before the sheathing (i.e., the sheathing does not have to be mounted on the wall before the truss hanger), thereby simplifying construction. The truss hanger **26**, **126** can be formed from a metal blank **80**, **180**, which reduces the number of parts required to hang the floor truss **12** and simplifies the manufacturing process.

In an independent test performed by an outside firm, the truss hanger was installed as part of a wall assembly including 2×6 wood studs, 24" on center, with two layers of ⅝" Type X gypsum attached to each side. The gypsum board included a slot to accommodate the hanger. The hanger was fixed to the top plate of the wall with six 10d common nails in the connector tabs. The cavities in the wall were filled with mineral wool insulation. The testing was performed per ASTM E814 which subjected the specimen to the time/temperature curve prescribed in ASTM E119 for a period of two hours, followed by a hose stream test. As a result of this

testing, the outside firm reported that when installed on one side of a maximum 2 hour fire-rated wall assembly, the penetration of the truss hanger through the gypsum board will not reduce the fire resistive rating of the 2 hour fire resistive assembly.

Having described the invention in detail, it will be apparent that modifications and variations are possible without departing from the scope of the invention defined in the appended claims.

When introducing elements of the present invention or the preferred embodiments(s) thereof, the articles "a", "an", "the" and "said" are intended to mean that there are one or more of the elements. The terms "comprising", "including" and "having" are intended to be inclusive and mean that there may be additional elements other than the listed elements.

In view of the above, it will be seen that the several objects of the invention are achieved and other advantageous results attained.

As various changes could be made in the above products without departing from the scope of the invention, it is intended that all matter contained in the above description and shown in the accompanying drawings shall be interpreted as illustrative and not in a limiting sense.

What is claimed is:

1. A hanger for connecting a structural component to a wall adapted to have sheathing mounted thereon, the hanger comprising:

a channel-shaped portion configured to receive the structural component;

an extension portion extending from the channel-shaped portion and configured to extend through the sheathing to engage the wall at a first location, the extension portion including extension flanges extending from the channel-shaped portion, each of the extension flanges being configured to extend through the sheathing; and

a connection portion configured for attachment to the wall at a second location spaced from the first location;

wherein the extension flanges include edges, each of the edges having an edge surface area, and major surfaces, each of the major surfaces having a major surface surface area, the major surface surface area being greater than the edge surface area, the major surfaces of the extension flanges being in opposed face-to-face relation and directly engaging each other along a juncture between the connection portion and the channel-shaped portion, the edges of the extension flanges being free of engagement with each other.

2. A hanger as set forth in claim **1**, wherein the channel-shaped portion is disposed with respect to the extension portion to mount the structural component generally orthogonal to the wall.

3. A hanger as set forth in claim **1**, wherein the channel-shaped portion is disposed with respect to the extension portion to mount the structural component at a non-orthogonal angle relative to the wall.

4. A hanger as set forth in claim **1**, wherein the major surfaces of the extension flanges are configured to engage each other along a juncture positioned within the sheathing.

5. A hanger as set forth in claim **1**, wherein each of the extension flanges includes a driving point configured to be inserted into the sheathing, the driving point extending vertically when the hanger is attached to the wall.

6. A hanger as set forth in claim **1**, wherein the connection portion includes connector tabs configured to overlie and engage a top plate of the wall.

7. A hanger as set forth in claim **1**, wherein the extension portion includes back flanges configured to engage the wall at said first location.

8. A hanger as set forth in claim **1**, wherein the channel-shaped portion includes a base sized and shaped for receiving the structural component thereon and side panels extending upward from the base, each of the side panels including fastening structure for use in attaching the hanger to the structural component.

9. A hanger as set forth in claim **8**, wherein the channel-shaped portion further includes back panels, each of the back panels extending from a respective one of the side panels.

10. A hanger as set forth in claim **1** in combination with a slot template for cutting a slot in the sheathing configured to receive the extension portion of the hanger.

11. A hanger as set forth in claim **1**, wherein the channel-shaped portion, extension portion, and connection portion are formed as a one-piece construction such that the channel-shaped portion is fixed in position relative to the connection portion.

12. A hanger as set forth in claim **1** wherein the channel-shaped portion includes a base sized and shaped for receiving the structural component thereon and side panels extending upward from the base, the extension flanges being substantially perpendicular to the base.

13. A hanger as set forth in claim **12** wherein the connection portion includes connector tabs configured to overlie and engage a top plate of the wall, the connector tabs being parallel to the base, and perpendicular to the side panels and the extension flanges.

* * * * *