DU/DHU/DHUTF

Fire Wall Hangers

The DU/DHU face-mount and the DHUTF top-mount hangers are designed to carry joist floor loads to a wood stud wall through two layers of ⅝" gypsum board (drywall). These hangers install after the drywall is in place. The hangers come in sizes that accommodate most joists used in multi-family construction including I-joists and trusses.

All three fire wall hangers are fire-resistant F (flame) and T (temperature) rated in Intertek Design No. SST/WPCF 120-01.

Material: DU — 14 gauge; DHU and DHUTF — 12 gauge

Finish: Galvanized

Installation: • Use all specified fasteners; see General Notes.

- Strong-Drive® SDS Heavy-Duty Connector screws are provided with the hanger.
- Drywall is installed first.
- DU and DHU are mounted with top of hanger flush with top of wall and tight to the drywall.
- Wall top plates must be restrained to prevent rotation. Where gravity load on top of wall is less than 150 plf, use a stud plate tie connector at the back of each stud or provide equivalent restraint by another method as determined by designer.
- Stud wall top plate splices must occur at a stud location.

Options: • The DHU may be ordered with one flange concealed for widths at least 2½" wide; specify which flange when ordering. Use 74% of the table downloads and 100% of table uplift loads.

- The DHU/DHUTF may be ordered skewed up to 45°. Use 75% of the table downloads and 50% of table uplift loads.

Codes: See p. 11 for Code Reference Key Chart

Two-Hour, Fire-Rated Wall

Simpson Strong-Tie has completed ASTM E814 standard testing at an accredited laboratory. The use of the DU/DHU/DHUTF hangers does not reduce the two-hour, fire wall assembly rating. The hangers tested provide an F (flame) and T (temperature) rating.

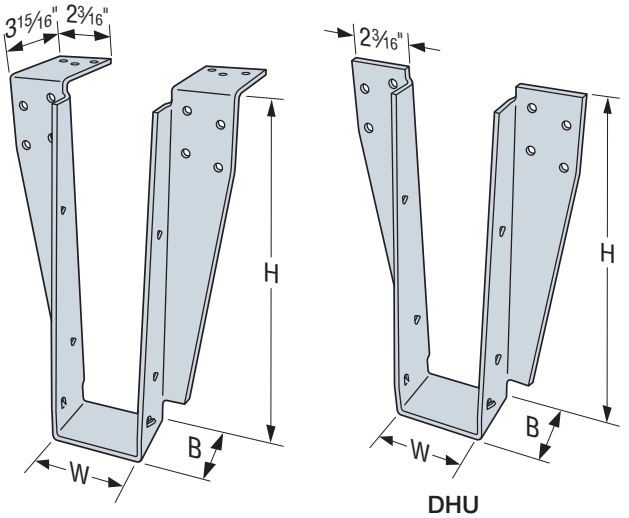

DHUTF
US Patent 9,394,680

DHU
(DU similar)
US Patent 9,394,680

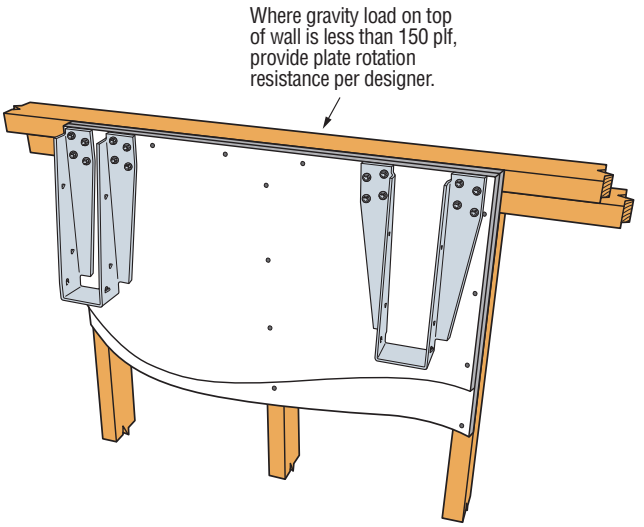

Typical Installation Showing DHU with Concealed Flange Option (at left) and a DHU Standard Installation

Allowable Loads

Model	Condition[1]	DF/SP Allowable Loads		SPF/HF Allowable Loads		Code Ref.
		Uplift (160)[3,4]	Down (100)[2]	Uplift (160)[3]	Down (100)[2]	
DU	Over (2) layers ⅝" drywall	95	1,110	170	880	IBC, FL, LA
DHU DHUTF	Over (2) layers ⅝" drywall	95	1,410	170	1,185	

1. Loads assume ⅝" Type X drywall attached per IBC. Wall assembly must consist at a minimum of two 2x4 plate members with studs spaced not more than 16" o.c. For alternative solutions to mounting over a single layer of drywall, refer to the technical bulletin T-C-TFWALL at **strongtie.com**.
2. Hangers spaced closer than 16" o.c. shall reduce allowable load proportionately.
3. Triangular nail holes may be filled with (4) additional 0.148" x 1½" to achieve an allowable upliftl load of 750 lb.
4. DF carried members with a minimum of 1½" x 2½" solid sawn chord dimensions may increase Allowable Uplift Load to 170 lb.
5. Allowable downloads may be increased to 1,885 lb. for DF/SP and 1,585 lb. for SPF/HF using the DHU3.56/24 or DHUTF3.56/24 models.
6. For a DHU/DHUTF two-sided (back-to-back) application on a 2x6 wall, use 1,200 lb. allowable download for DF/SP plates and use 1,005 lb. for SPF/HF plates.
7. For a DU two-sided (back-to-back) application on a 2x6 wall, use 1,075 lb. allowable download for DF/SP plates and 880 lb. for SPF/HF plates.
8. For installations of two layers of gypsum wall board over ⅝" maximum wood structural panel, the DHU/DHUTF has an allowable download of 1,975 lb. for DF/SP plates and 1,660 lb. for SPF/HF plates.
9. For the DU, if a ⅝" structural wood panel is used between the drywall and the studs, use 1,110 lb. allowable download for DF/SP plates and 880 lb. for SPF/HF plates.

Fastener Table

Model	Ga.	B (in.)	Fasteners (in.)		
			Joist	Face	Top
DU	14	2	(2) 0.148 x 1½	(4) ¼ x 3½ SDS	—
DHU	12	2.5	(2) 0.148 x 1½	(8) ¼ x 3½ SDS	—
DHUTF	12	2.5	(2) 0.148 x 1½	(8) ¼ x 3½ SDS	(6) 0.148 x 1½

C-C-2021 ©2021 SIMPSON STRONG-TIE COMPANY INC.

Columbia Insurance Company - Exhibit 2006
Simpson Strong-Tie Company Inc. v. Columbia Insurance Company PGR2023-00048
Page 1

DU/DHU/DHUTF

Fire Wall Hangers (cont.)

Joist Size (in.)	Face Mount		Top Flange	Dimensions (in.)	
	DU Models	DHU Models	DHUTF Models	W	H
2x10	DU210	DHU210	DHU210TF	1 9/16	9 1/8
2x12	DU212	DHU212	DHU212TF	1 9/16	11 1/8
1 3/4 x 9 1/2	DU1.81/9.5	DHU1.81/9.5	DHU1.81/9.5TF	1 13/16	9 7/16
1 3/4 x 11 7/8	DU1.81/11.88	DHU1.81/11.88	DHU1.81/11.88TF	1 13/16	11 13/16
1 3/4 x 14	DU1.81/14	DHU1.81/14	DHU1.81/14TF	1 13/16	13 15/16
1 3/4 x 16	—	DHU1.81/16	DHU1.81/16TF	1 13/16	15 15/16
2 x 9 1/2	DU2.1/9.5	DHU2.1/9.5	DHU2.1/9.5TF	2 1/8	9 7/16
2 x 11 7/8	DU2.1/11.88	DHU2.1/11.88	DHU2.1/11.88TF	2 1/8	11 13/16
2 x 14	DU2.1/14	DHU2.1/14	DHU2.1/14TF	2 1/8	13 15/16
2 x 16	—	DHU2.1/16	DHU2.1/16TF	2 1/8	15 15/16
2 1/16 x 9 1/2	DU2.1/9.5	DHU2.1/9.5	DHU2.1/9.5TF	2 1/8	9 7/16
2 1/16 x 11 7/8	DU2.1/11.88	DHU2.1/11.88	DHU2.1/11.88TF	2 1/8	11 13/16
2 1/16 x 14	DU2.1/14	DHU2.1/14	DHU2.1/14TF	2 1/8	13 15/16
2 1/16 x 16	DU2.1/16	DHU2.1/16	DHU2.1/16TF	2 1/8	15 15/16
2 5/16 x 9 1/2	DU2.37/9.5	DHU2.37/9.5	DHU2.37/9.5TF	2 3/8	9 7/16
2 5/16 x 11 7/8	DU2.37/11.88	DHU2.37/11.88	DHU2.37/11.88TF	2 3/8	11 13/16
2 5/16 x 14	DU2.37/14	DHU2.37/14	DHU2.37/14TF	2 3/8	13 15/16
2 5/16 x 16	DU2.37/16	DHU2.37/16	DHU2.37/16TF	2 3/8	15 15/16
2 5/16 x 18	—	DHU2.37/18	DHU2.37/18TF	2 3/8	17 15/16
2 1/2 x 9 1/2	—	DHU2.56/9.5	DHU2.56/9.5TF	2 9/16	9 7/16
2 1/2 x 11 7/8	—	DHU2.56/11.88	DHU2.56/11.88TF	2 9/16	11 13/16
2 1/2 x 14	—	DHU2.56/14	DHU2.56/14TF	2 9/16	13 15/16
2 1/2 x 16	—	DHU2.56/16	DHU2.56/16TF	2 9/16	15 15/16
2 1/2 x 18	—	DHU2.56/18	DHU2.56/18TF	2 9/16	17 15/16
2 1/2 x 20	—	DHU2.56/20	DHU2.56/20TF	2 9/16	19 15/16
3 1/2 x 9 1/2	—	DHU3.56/9.5	DHU3.56/9.5TF	3 9/16	9 7/16
3 1/2 x 11 7/8	—	DHU3.56/11.88	DHU3.56/11.88TF	3 9/16	11 13/16
3 1/2 x 14	—	DHU3.56/14	DHU3.56/14TF	3 9/16	13 15/16
3 1/2 x 16	—	DHU3.56/16	DHU3.56/16TF	3 9/16	15 15/16
3 1/2 x 18	—	DHU3.56/18	DHU3.56/18TF	3 9/16	17 15/16
3 1/2 x 20	—	DHU3.56/20	DHU3.56/20TF	3 9/16	19 15/16
3 1/2 x 22	—	DHU3.56/22	DHU3.56/22TF	3 9/16	21 15/16
3 1/2 x 24	—	DHU3.56/24	DHU3.56/24TF	3 9/16	23 15/16

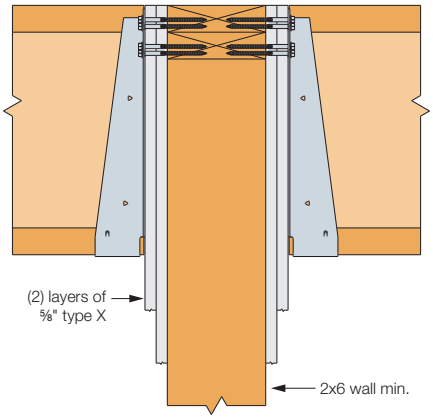

Two-Sided Installation
Over (2) Layers of Drywall

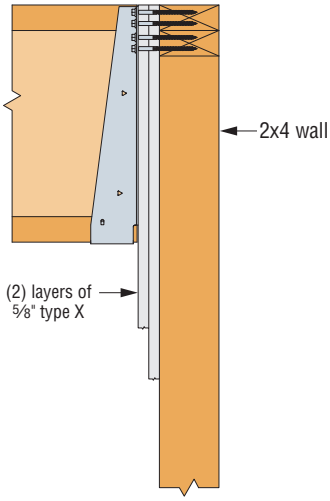

Typical Installation over
(2) Layers of Drywall

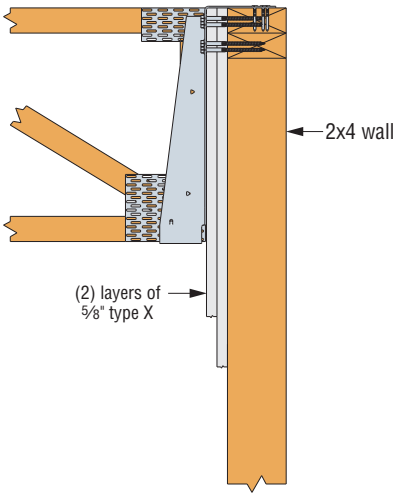

Typical Installation over
(2) Layers of Drywall

C-C-2021 ©2021 SIMPSON STRONG-TIE COMPANY INC.

Columbia Insurance Company - Exhibit 2006
Simpson Strong-Tie Company Inc. v. Columbia Insurance Company PGR2023-00048
Page 2