UNITED STATES PATENT AND TRADEMARK OFFICE

BEFORE THE PATENT TRIAL AND APPEAL BOARD

SIMPSON STRONG-TIE COMPANY INC.
Petitioner

v.

COLUMBIA INSURANCE COMPANY
Patent Owner

Case PGR2023-00048
U.S. Patent No. 11,649,626

PATENT OWNER'S RESPONSE TO THE PETITION FOR POST GRANT REVIEW

TABLE OF CONTENTS

Page

I. INTRODUCTION 1

II. BACKGROUND OF THE INVENTION CLAIMED IN THE '867 PATENT 1

A. Conventional Hangers 1
B. Firewalls 3

III. THE INVENTION CLAIMED IN THE '626 PATENT 4

IV. SIMPSON'S ASSERTED PRIOR ART REFERENCES 9

A. Yamaguchi (EX1041) 9
B. Cullen (EX1039) 10
C. Adams (EX1040) 12
D. Bundy (EX1007) 13

V. CLAIM CONSTRUCTION 17

A. The POSITA 17
B. Constructions From Prior Proceedings 18
C. "Chanel-Shaped Portion" 19

VI. NONE OF THE CLAIMS WERE OBVIOUS OVER YAMAGUCHI IN VIEW OF BUNDY 21

A. Yamaguchi Does Not Disclose "Extension Portion Spacing the Channel-Shaped Portion from the Back Flange Plane" or "an Extension Flange" 22
B. The Modification of Yamaguchi in View of Bundy Would Not Have Met the "Extension Portion Spacing the Channel-Shaped Portion from the Back Flange Plane by a Distance Sized Large Enough to Permit the Two Layers of 5/8-Inch-Thick Drywall of the Fire Separation Wall to be Received Between the Channel-Shaped Portion and the Back Flange Plane" 24
C. Neither Yamaguchi nor Bundy Discloses "an Extension Portion Including a First Extension Flange Extending From the Back Flange of the Connection Portion to the Channel-Shaped Portion" 27

VII. NONE OF THE CLAIMS WOULD HAVE BEEN OBVIOUS OVER CULLEN IN VIEW OF BUNDY 30

A. Cullen Fails to Disclose an "Extension Portion Spacing the Channel-Shaped Portion from the Back Flange Plane" or "an Extension Flange" 31

VIII. NONE OF THE CLAIMS WERE OBVIOUS OVER ADAMS IN VIEW OF BUNDY.....33

A. Adams Does Not Disclose an "Extension Portion Spacing the Channel-Shaped Portion from the Back Flange Plane" or "an Extension Flange" 34

B. The Modification of Adams in View of Bundy "to Permit the Two Layers of 5/8-Inch-Thick Drywall of the Fire Separation Wall to be Received Between the Channel-Shaped Portion and the Back Flange Plane" Would Change Adam's Principle of Operation 37

IX. CONCLUSION.....41

TABLE OF AUTHORITIES

Page(s)

Cases

Apple Inc. v. Voip-pal.com, LLC.,
IPR 2016-01201, Paper 54 (P.T.A.B. Nov. 20, 2017).....27

Plas-Pak Indus., Inc. v. Sulzer Mixpac AG,
600 Fed. Appx. 755 (Fed. Cir. 2015).....40

Other Authorities

37 C.F.R. § 42.6(a)(2)(ii).....43

37 C.F.R. § 42.6(a)(2)(iii) and (iv).....43

37 C.F.R. § 42.6(e).....42

37 C.F.R. § 42.24.....43

37 C.F.R. § 42.24(d).....43

EXHIBIT LIST

Exhibit No.	Description
2001	U.S. Patent No. 537,504
2002	1994 Timber Construction Manual
2003	2012 International Building Code
2004	2000 International Building Code
2005	MiTek FWH Spec. Sheet
2006	DU/DHU/DHUTF Drywall Hangers

I. INTRODUCTION

Having twice previously challenged patents in the same family as the '626 Patent, Simpson's Petition returns again with three newly unearthed prior art references to combine with Bundy—the only reference that Simpson has asserted that discloses joist hangers constructed for use with 2 hour-fire rated wall assemblies. The Petition depends upon yoking these new references with Bundy to create new prior art grounds to challenge the claims of the '626 Patent.

However, each of Simpson's prior art grounds fails to demonstrate that every claim limitation of the challenged claims of the '626 Patent was disclosed in the asserted prior art. Resultantly, Simpson fails to demonstrate that any of the '626 Patent's claims are invalid. Patent Owner respectfully requests that the Board deny the Petition.

II. BACKGROUND OF THE INVENTION CLAIMED IN THE '867 PATENT

A. Conventional Hangers

The '626 Patent pertains to hangers for connecting structural components (*e.g.*, joists) to a wall that can have drywall mounted thereon, and more specifically, to firewall hangers that connect such structural components to fire separation walls. EX1001: Abstract.

The construction industry has used hangers for connecting trusses, joists, and beams to wall structures for over a century. EX2001. There have been numerous

advancements, improvements, and modifications to these hangers. For example, the '626 Patent alone cites over 100 prior art patents and patent applications, the majority of which are directed to advancements in hanger technology. EX1001: References Cited. Notably, a considerable number of these prior art references originated from Simpson.

As depicted below, prior art hanger designs routinely include a channel supporting the structural component (*e.g.*, a beam or joist) and a part attaching the hanger to a wall. EX2002: 16.

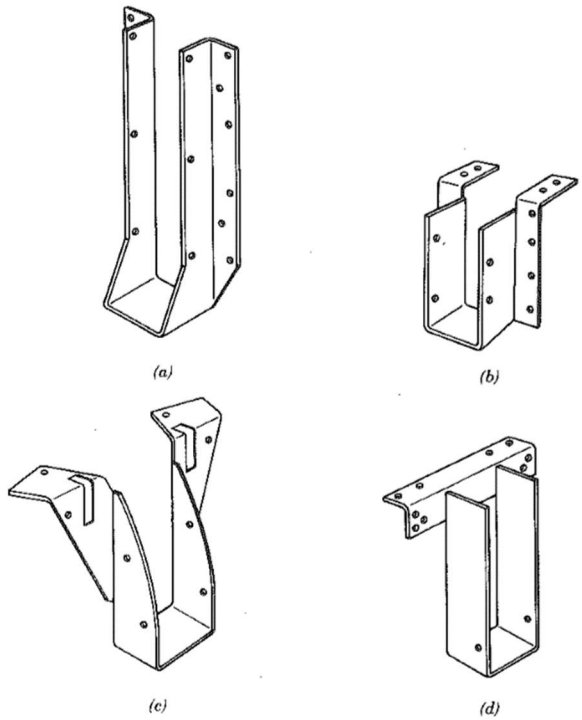

FIGURE 7.29 Typical joist and purlin hanger types. (*a*) Joist hanger; (*b*) joist hanger; (*c*) joist and purlin hanger; (*d*) joist and beam hanger.

B. Firewalls

Firewalls are special types of walls designed to retard a fire within a structure from spreading to other parts of the structure. For instance, section 706.4 of the 2012 International Building Code specifies that the walls separating units of hotels, motels, apartment housing, and timeshare properties must meet a two-hour fire rating. EX2003: 118. Building codes have required a fire resistance duration rating of two-hours between separate units within these types of structures since at least 2000. EX2004: 98.

A typical method of achieving a two-hour fire rating for wood stud light framed walls is to use a double layer of 5/8-inch thick Type-X Gypsum wallboard[1] on both sides of the wood framed wall. EX2003: 153; EX2004: 126-127. As evidenced by the 2000 International Building Code, the use of double layers of 5/8-inch thick Type-X Gypsum wallboard to achieve a two-hour fire rating date back to at least 2000. EX2004: 126-127.

Section 706.6 of the 2012 International Building Code specifies that the fire-resistant partitions must have vertical continuity extending from the foundation to the roof of the structure. EX2003: 119-120. Accordingly, for fire separation walls, the double layer of 5/8-inch thick Type-X Gypsum wallboard is installed on a wood

[1] Wallboard is also commonly referred to as gypsum board or drywall.

framed wall from the floor to either the next level's subfloor or, for the top level of a structure, to the structure's roof. EX2003: 119-120.

III. THE INVENTION CLAIMED IN THE '626 PATENT

In using traditional hangers for connecting joists to wall framing or a supporting member, the joists butt directly up against the wall framing or a supporting member. EX1001: 33-37. In using a traditional hanger on a fire-separation wall, a cutout is required in the fire-resistant drywall for the entire cross-section of the joist where the joist butts up directly against the wall framing. EX1001: 37-38. In fact, the cutout must be larger than the cross section of the joist to accommodate the hanger. These cutouts for the joists create large discontinuities in the fire-resistant drywall, thus decreasing the wall's resistance to fire. EX1001: 37-42.

Since at least 2000, a POSITA would have been strongly biased against cutting holes in the gypsum board to accommodate a hanger. Still, there were no known hangers constructed to avoid cutting out the entire cross sections of the joists from the fire-resistant drywall prior to December 2013.

The '626 Patent pertains to an improvement in hangers for connecting trusses and joists to firewalls, whereby the truss hanger includes (1) a channel-shaped portion configured to receive the structural component (item (52) in Fig. 2 and 4, below), (2) an extension portion extending from channel-shaped portion and

configured to extend through the drywall (items (40) and (60)), and (3) a connection portion configured for attachment to the top plate of a wood stud light framed wall (collectively, items (66) and (74)). EX1001: Abstract.

FIG. 2

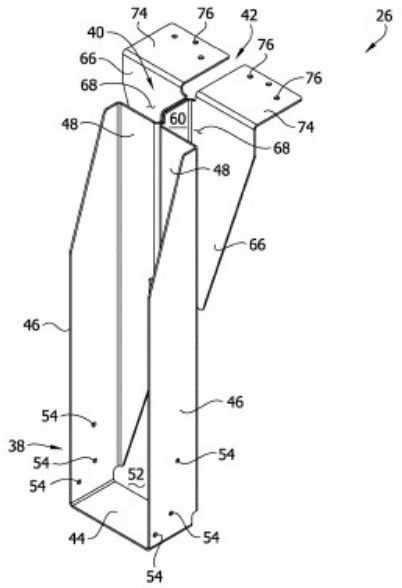

FIG. 4

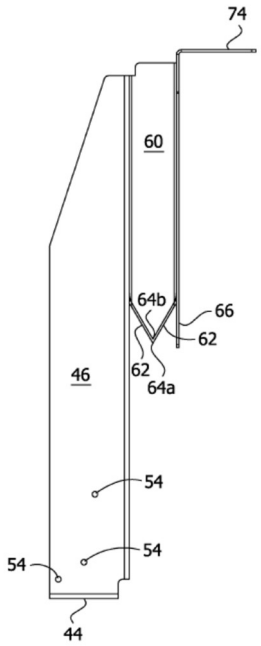

Because the extension portion spaces the joist a sufficient distance from the wall framing, the fire barrier does not require a cutout corresponding to the entire cross section of the joist. EX1001: Fig. 1007. Instead, the cutout in the drywall only needs to be large enough to allow the extension portion to pass through it. EX1001: 4:31-33. Further, the extension portion is configured to extend through the drywall in close conformance with the edges of the opening in the drywall so as to minimize the gap in the fire barrier. EX1001: 4:31-33, 5:34-36. Further, any gap in the fire

barrier is effectively blocked by the back flange of the hanger. EX1001: Fig 7 (annotated below).

FIG. 7

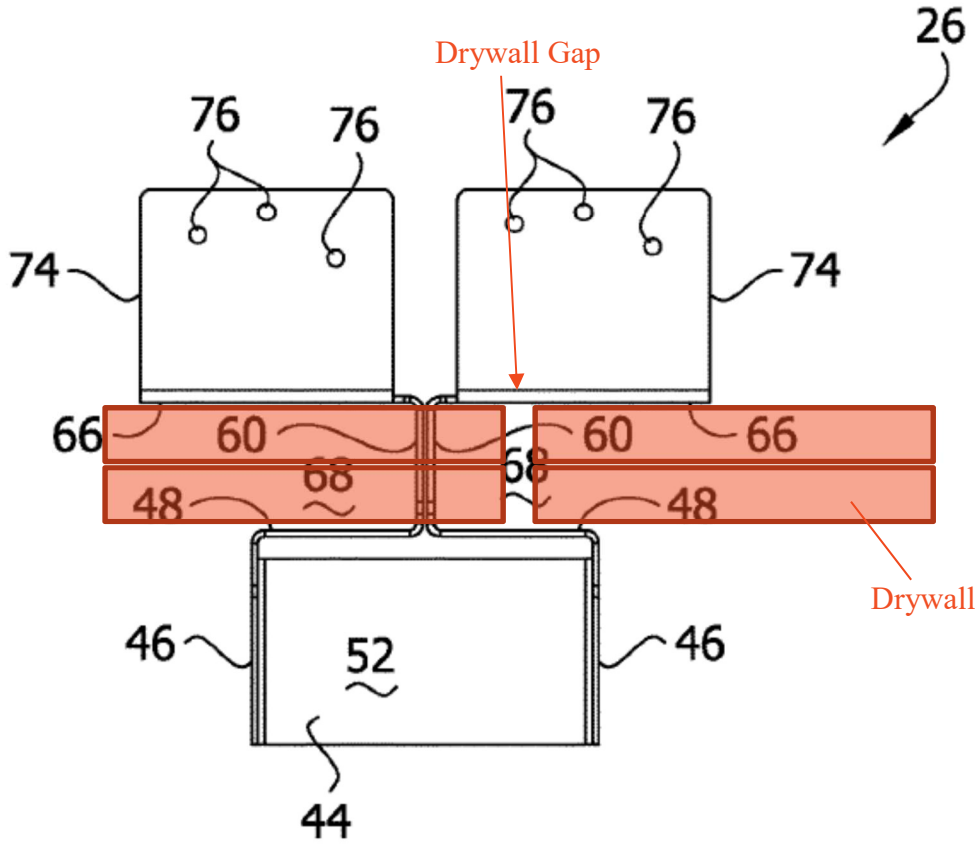

For any hanger, the load from the joist will urge the hanger to pivot about its attachment to the wall (*e.g.*, at (22) and (23) in the figure below). But as traditional hangers directly engage the framing along the full height of the hanger, the pivoting action is directly resisted. EX1024: Fig. 7 (reproduced below).

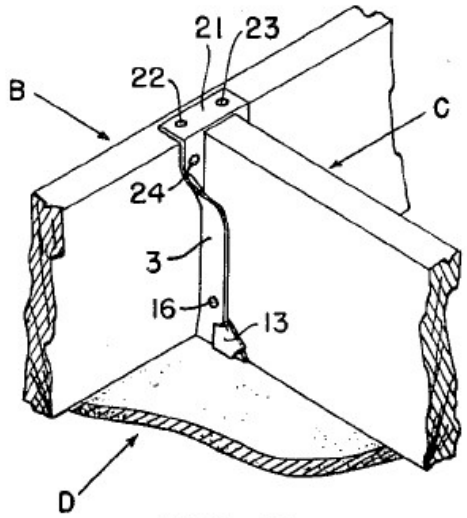

FIG. 7

Spacing the joist away from the wall—as with the hanger claimed by the '626 Patent—increases the moment arm between the center of bearing for the joist and the point of attachment to the wall. The increased moment arm creates additional moment resulting in a tendency for the hanger to pivot counterclockwise (as oriented in Fig. 4 below) about the top flange (74). EX1001: Fig. 4 (reproduced below).

FIG. 4

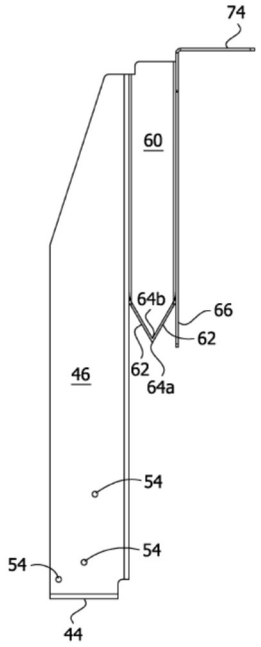

As claimed, the extension portion extends from a back flange that engages a vertical face of the top plate (claim 1) or extends from the channel-shaped portion and configured to extend through drywall (claim 53). In either phrasing of the "extension portion" requirement, the extension portion (or back flange) is arranged to transfer the load from the joist to the top plate at a location substantially below the top flange of the hanger. EX1001: claims 1, 53. This construction braces the moment arm of the load tending to urge the bottom of the channel-shaped portion to pivot. EX1001: 6:58-7:14. As such, far higher loads can be carried by the claimed hanger with the extension portion as claimed by the '626 Patent. *Compare* EX2005: 2 (commercial embodiment of the claimed hanger) and EX2006: 1 (lacking an extension portion configured to extend through the drywall).

Further, because the claimed hanger itself defines a fixed spacing between the channel-shaped portion and the back flange for receiving the drywall, the hanger may be installed prior to mounting drywall on the wall. EX1001: 7:62-64. This allows the building to be completely framed and roofed prior to installation of the drywall, as opposed to waiting to mount the hanger and continue framing the building until after the unprotected drywall is mounted. EX1001: 7:64-8:2.

IV. SIMPSON'S ASSERTED PRIOR ART REFERENCES

A. <u>Yamaguchi (EX1041)</u>

Yamaguchi was a design patent application depicting a joist bracket attached to the sill of a foundation wall.

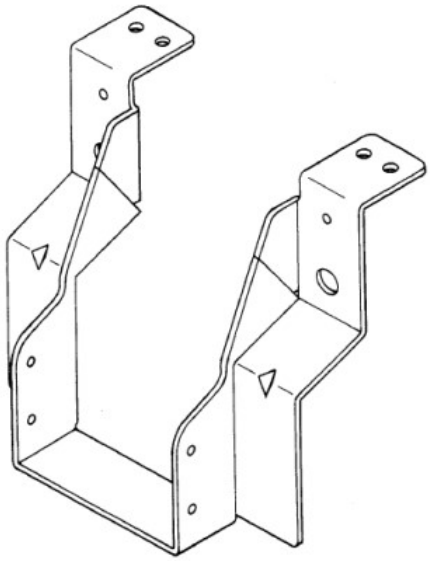

EX1041, Front View

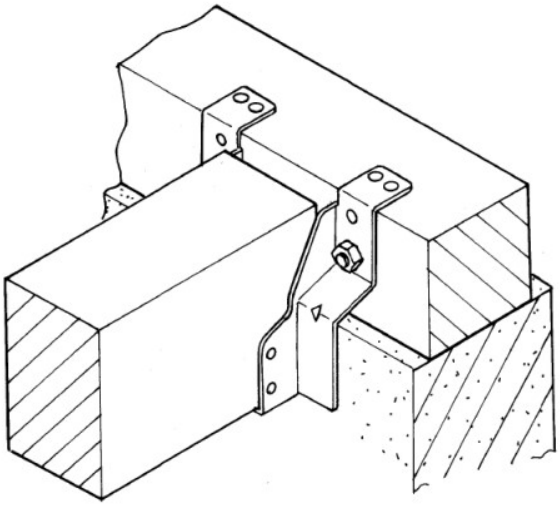

EX1041, Reference Diagram Illustrating Usage State

B. <u>Cullen (EX1039)</u>

Cullen discloses a variation of the standard joist hanger designed for use on decking. The hanger was intended to secure the joist against the back flange (12), and in one embodiment included barbs (31, 33) located at the back flange to engage and connect to the joist. EX1039: 11:11-17. In order to aid in leveling the top of the joist the hangers include a location tab (84). EX1039: 12:20-13:5.

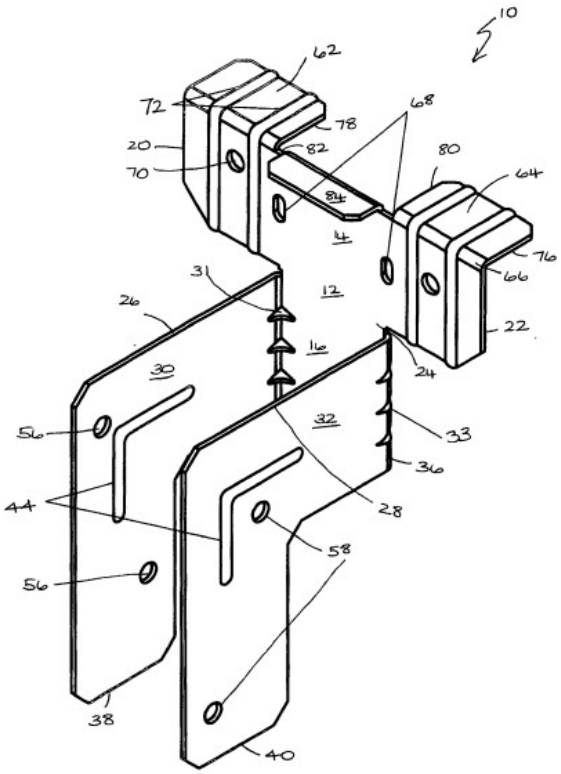

FIGURE 1

EX1039: Figure 1

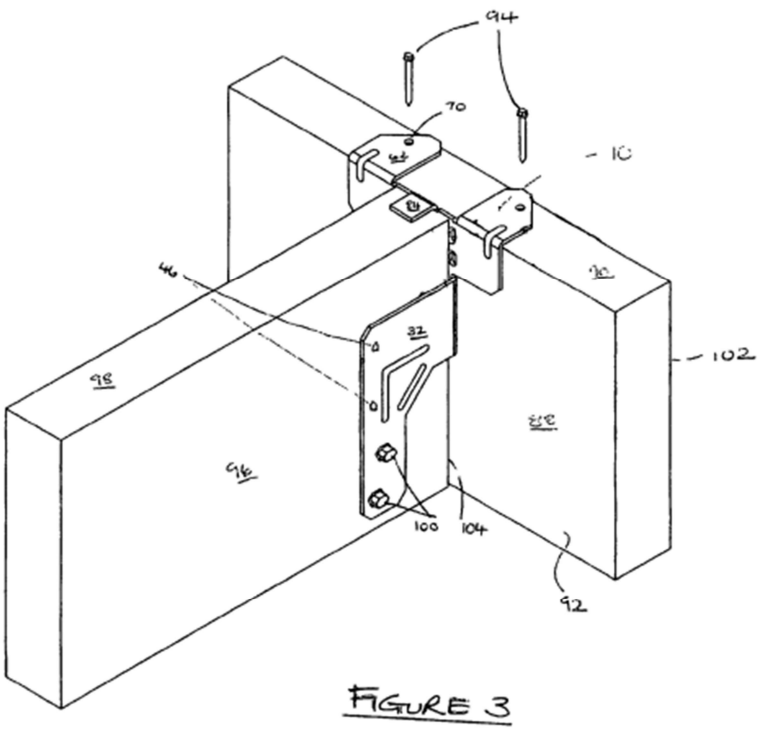

EX1039: Figure 3

C. <u>Adams (EX1040)</u>

Adams discloses another variation of the standard joist hanger. The hanger was intended to secure the joist against the back flange—which Adams refers to as an abutment portion (19). EX1040: 4:22-33. In the embodiment that Simpson focused on its Petition, the hanger includes stirrups (13) spaced forward of the wall, a shoe plate (22) to enlarge the seat holding the joist, and a rear portion of the shoe plate (25) carrying the load back to wall structure. EX1040: 10:45-57.

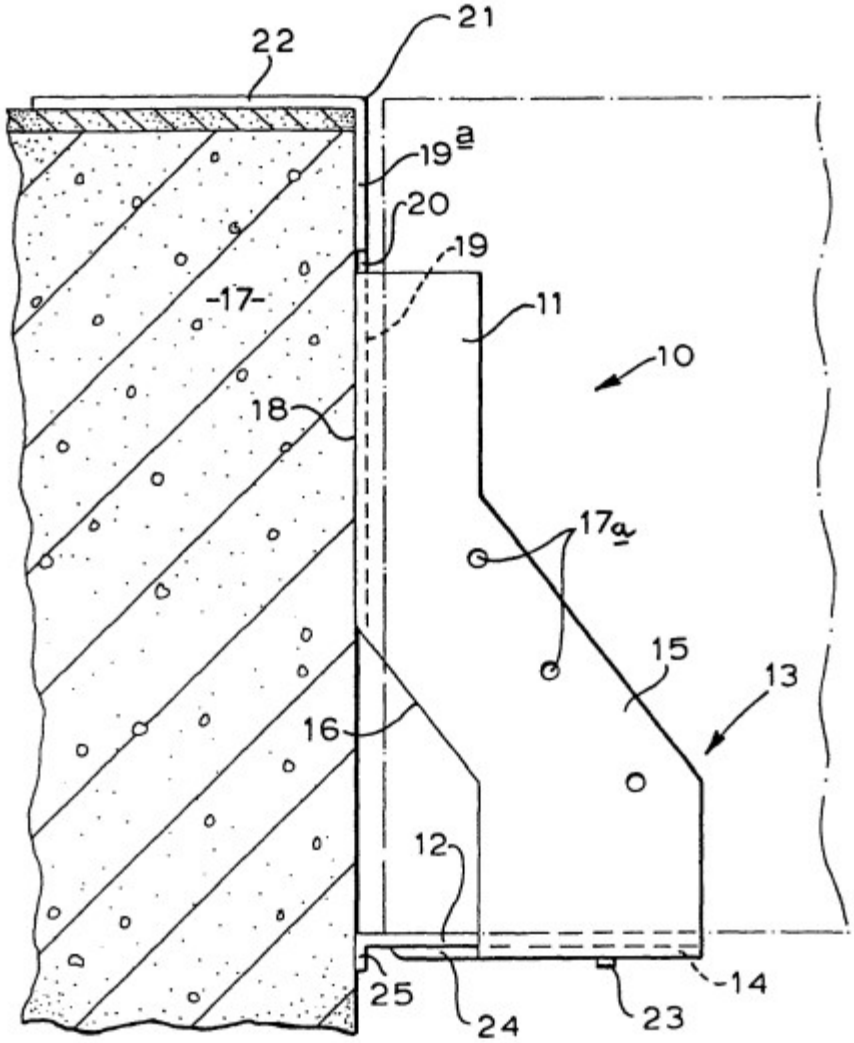

FIG 2

EX1040: Figure 2

D. <u>Bundy (EX1007)</u>

U.S. Patent No. 9,394,680 ("Bundy") is a patent assigned to Simpson. EX1007.

While Bundy is technically a prior art reference to the '626 Patent, its December 14, 2013 filing date predates the '626 Patent's December 31, 2013 priority

date by less than three weeks. EX1001; EX1007. By virtue of having been filed less than three weeks prior to the '626 Patent's priority date, Bundy represents a contemporaneous attempt by Simpson to develop a firewall hanger. While Bundy's and the '626 Patent's inventors both sought to invent a hanger that achieved significantly improved fire ratings over traditional hangers, they took very different approaches.

Bundy teaches a joist hanger that is capable of being installed over "one or more generally vertical drywall panels [6]." EX1007: Abstract. As shown below in Figs. 1 and 2, the Bundy hanger is installed on a top plate (4) of a wall having one or more drywall panels (6) already mounted thereon. EX1007: 4:60-61, 6:1-5.

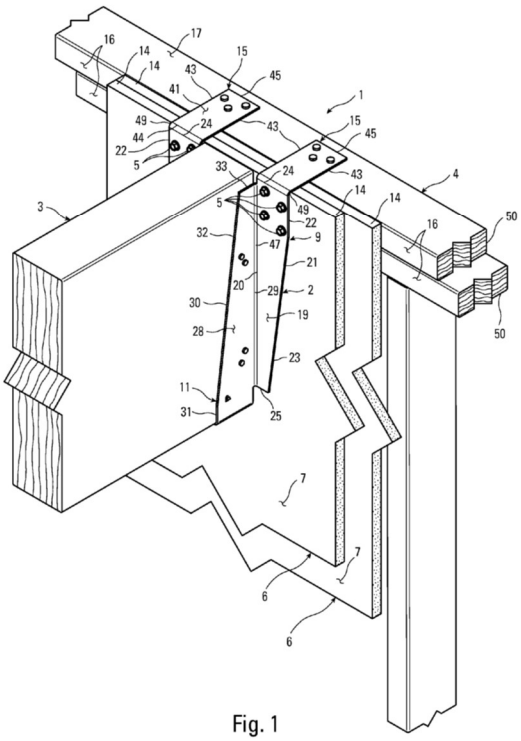

Fig. 1

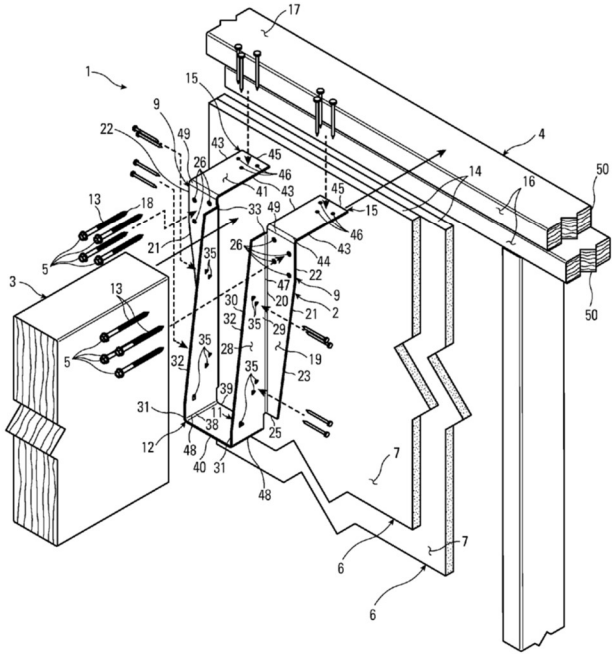

Fig. 2

EX1007: Figs. 1 and 2

The joist hanger of Bundy includes a channel-shaped portion for receiving the joist. EX1007: 5:23-27, Fig. 2.

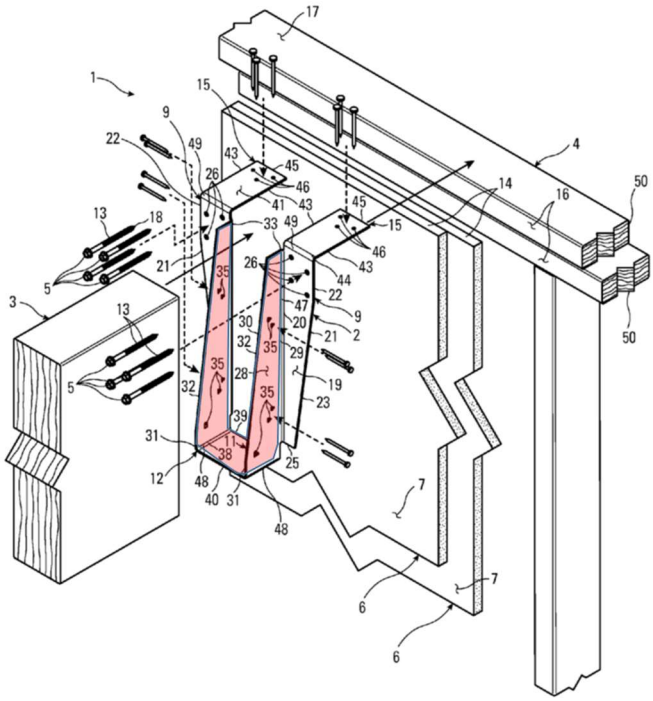

Fig. 2

EX1007: Fig. 2 (annotated)

The joist hanger further includes first and second back plate members (9) extending outward from the channel-shaped portion's respective side members (11). EX1007: 4:5-16, Fig. 2.

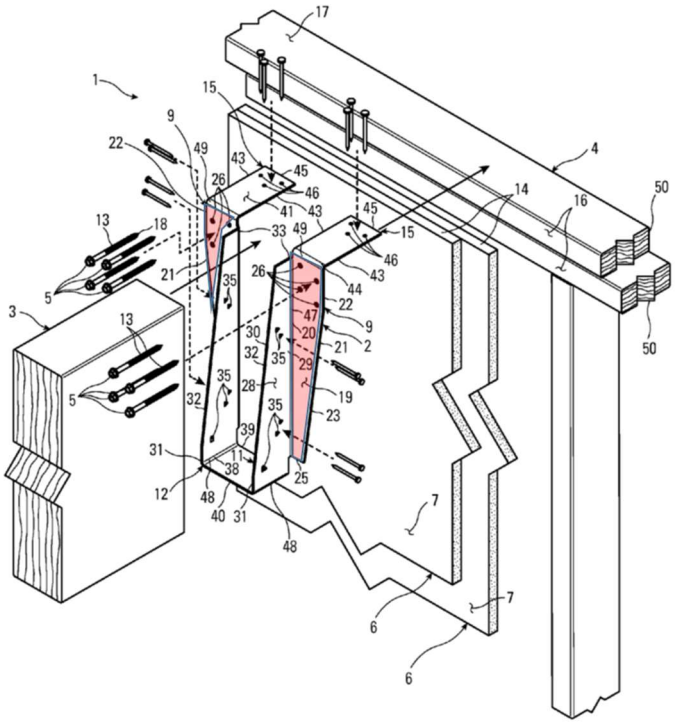

Fig. 2

EX1007: Fig. 2 (annotated)

The joist hanger also includes top flanges (15) extending rearward from the respective back plate members (9) for attaching the joist hanger to the top surface of the top plate of a wall. EX1007: 5:39-42, Fig. 2.

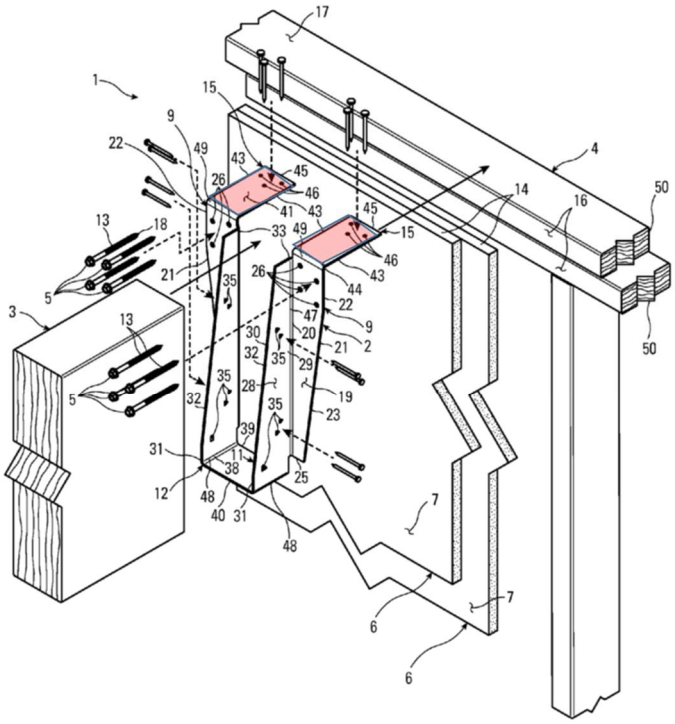

Fig. 2

EX1007: Fig. 2 (annotated)

The joist hanger (1) is mounted on the top plate (4) of the wall after the one or more drywall panels (6) are installed on the wall. EX1007: Figs. 1-2; EX2006: 1.

V. CLAIM CONSTRUCTION

A. <u>The POSITA</u>

The level of ordinary skill in the art is a person that at the time of the earliest filing date of the '867 Patent would have acquired a body of knowledge gained through formal education, or practical experience providing an equivalent to, a Bachelor of Science in Mechanical Engineering, Civil/Structural Engineering, or a

related/equivalent field, and at least four years of work experience in construction connector design/development.

B. Constructions From Prior Proceedings

Simpson applies the constructions for the following terms, which Simpson identifies as taken from PGR2019-00063:

- "extend through": we construe "extend through," "in the context of element A 'extend[ing] through' element B," to mean "'element A extends into one side and out the other side of element B.'" Pet: 6.
- "configured to extend through" the sheathing: "extending into one side and out of the other side of the sheathing." Pet: 6.
- "extending from": "in the context of element B extending from element A, the beginning of element B's extension is on element A." Pet: 7.
- "rigidly fixed": "components are connected such that they do not move freely with respect to one another." Pet: 7.

Simpson applies the constructions for the following terms, which Simpson identifies as taken from PGR2021-00109:

- "each extension flange lying in an extension flange plane": "for each extension flange an extension flange plane is within the extent of the extension flange from the channel-shaped portion to the connection portion." Pet: 7.
- "configuring extension flanges to extend into one side and out the other side of sheathing": "the extension flanges define a space between the back flange of the connection and the channel-shaped portion to receive sheathing therein." Pet: 7.

For the purposes of this Response, Patent Owner does not dispute Simpson's constructions of "extend through," "extending from," "configured to extend through," "rigidly fixed," "each extension flange lying in an extension flange plane," or "configuring extension flanges to extend into one side and out the other side of sheathing."

C. **"Chanel-Shaped Portion"**

Regarding claims 1 and 53, the term "channel-shaped portion" appearing in those claims should be construed to mean that portion of the hanger that forms a channel configured to receive the structural component.

This construction is supported by the specification. Specifically, the specification discusses that "the channel-shaped portion 38 includes a seat or base 44 and a pair of side panels 46" that "form a channel 52 configured to receive the [structural component]." EX1001: 4:37-47. Notably, the specification makes clear that all portions of the hanger which directly bound the channel that receives the structural component constitute the channel shaped portion. EX1001: 2:28-31 (identifying that with respect to the disclosed embodiments, the back panels (48 in the figures) are also part of the channel-shaped portion).

FIG. 2

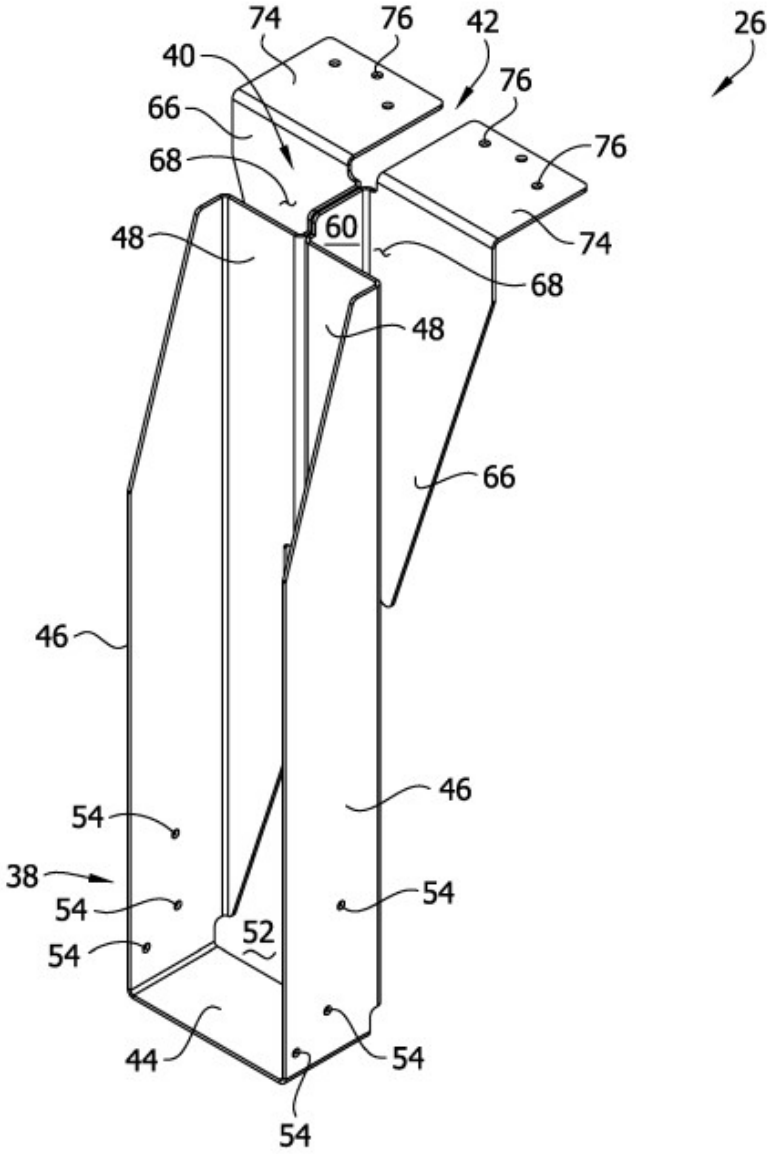

EX1001: Figure 2

VI. NONE OF THE CLAIMS WERE OBVIOUS OVER YAMAGUCHI IN VIEW OF BUNDY

Simpson argues that "Yamaguchi discloses each and every structural element" listed in the independent claims of the '626 Patent, with the exception that it does not "explicitly disclose that the space defined between its channel-shaped portion and back flange is sized large enough to receive two layers of 5/8-inch-thick drywall therein." Pet: 10.

Contrary to Simpson's arguments, the Petition fails to establish *prima facie* obviousness because modification of Yamaguchi in view of Bundy would have not have resulted in the "extension portion spacing the channel-shaped portion from the back flange plane by a distance sized large enough to permit the two layers of 5/8-inch-thick drywall of the fire separation wall to be received between the channel-shaped portion and the back flange plane" limitation that is present in both dependent claims.

Further, Simpson fails to establish its *prima facie* case of obviousness for Claims 1-52 in that it fails to establish that either Yamaguchi of Bundy disclose a "first extension flange extending from the back flange of the connection portion to the channel-shaped portion."

A. Yamaguchi Does Not Disclose "Extension Portion Spacing the Channel-Shaped Portion from the Back Flange Plane" or "an Extension Flange"

In attempting to correlate the components of Yamaguchi to the '626 Patent claim limitations, Simpson identifies the components (highlighted in green below) between the back flange of the connection portion (highlighted in blue below) and the channel-shaped portion (highlighted in red below) as the recited extension flange.

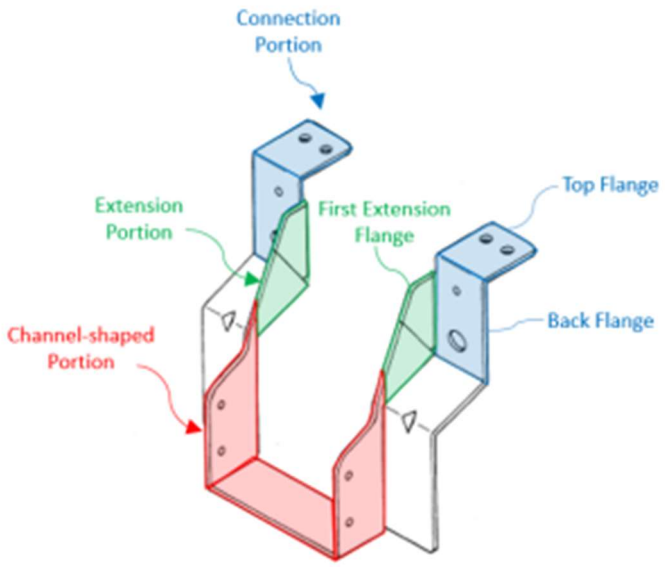

EX1041, Perspective (annotated); Pet: 20, 25, 27

As properly construed, the channel-shaped portion of a hanger as required by claims 1 and 53 is that portion of the hanger that forms the channel capable of receiving the joist. As shown in the drawing figures of Yamaguchi, the joist is received not only in the portion of the hanger shaded red in the Simpson drawings, but also in the portion shaded green.

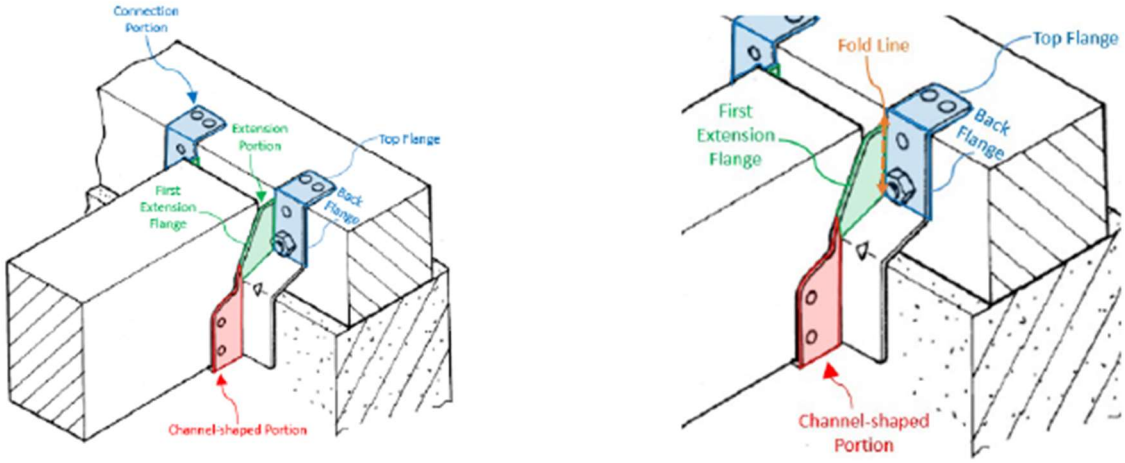

EX1041, Usage View (annotated); Pet: 21

Further, as applied to a standard wall frame, there would be no foundation wall blocking the joist. Thus the entirety of the joist could be inserted all the way back into engagement with the wall frame. This would be done to avoid introducing a bending moment to the hanger. Thus, the part of the hanger forming a channel that receives the joist (i.e., the channel-shaped portion) includes both the red and green shaded parts of Yamaguchi. Thus, there is no "extension portion" or "extension flange" as required by claims 1 and 53.

As the Petition relies on Yamaguchi as allegedly disclosing the "extension portion" or "extension flange," Simpson has failed to meet its *prima facie* case of

obviousness under its Cullen based obviousness grounds with respect to any of the claims of the '626 Patent.[2]

B. The Modification of Yamaguchi in View of Bundy Would Not Have Met the "Extension Portion Spacing the Channel-Shaped Portion from the Back Flange Plane by a Distance Sized Large Enough to Permit the Two Layers of 5/8-Inch-Thick Drywall of the Fire Separation Wall to be Received Between the Channel-Shaped Portion and the Back Flange Plane"

Independent Claims 1 and 53 of the '626 Patent require an "extension portion spacing the channel-shaped portion from the back flange plane by a distance sized large enough to permit the two layers of 5/8-inch-thick drywall of the fire separation wall to be received between the channel-shaped portion and the back flange plane." EX1001: 12:28-33, 18:30-35. Simpson fails to meet its *prima facie* case of obviousness in that its identified modification of Yamaguchi in view of Bundy does not meet this limitation.

Simpson argues that "a POSITA would have optimized the size of the spacing between Yamaguchi's back flange and channel-shaped portion to accommodate two layers of 5/8"-thick-drywall according to the size preference." Pet: 12. Regardless of whether one of skill in the art would have been motivated to use the Yamaguchi

---

[2] Claims 2-52 depend from Claim 1 and Claims 54-104 depend from Claim 53, and as such Simpson has failed to meet its burden to demonstrating obviousness with respect to any of the claims.

hanger with drywall applications, Yamaguchi's hanger design does not have a construction which will accept drywall—of any degree of thickness—between the channel-shaped portion and the back flange plane. Simpson's figures are correct in the limited sense that the back flange plane would lie in the front or outward facing surfaces of the purported back flange of Yamaguchi.

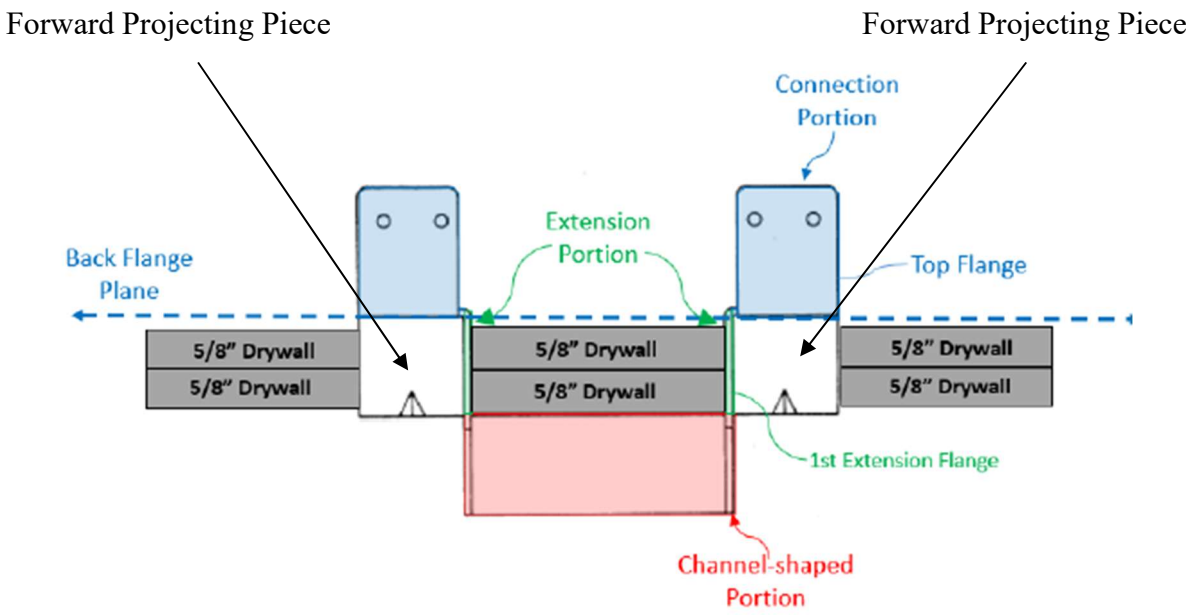

EX1041, Plan View (annotated); Pet: 24, 28, 31

However, much of the remainder of the drawing is fanciful in that it bears no resemblance to the reality of how the drywall would actually be positioned. The drywall would not be secured over the back flange, because it is blocked from doing so by the forward projecting pieces of the Yamaguchi hanger (added to the drawing above). Accordingly, there is no component of the hanger that prevents the back face of the drywall (or any portion thereof) being secured directly to the face of the

wall framing. Thus, the back flange plane at the front of the back flange does not define the space that receives drywall. Despite Simpson's deceptive annotations that would have the drywall floating in space, the drywall would be installed flush to the wall framing. Accordingly, the back flange plane would be positioned within the drywall space, rather than bounding the spaced that received the drywall. The space between the channel-shaped portion and the ***back flange plane*** is not constructed to receive drywall.

Under Simpson's suggested use, there would be no need for a drywall space of the specific size claimed. Since Yamaguchi's extension portion actually defines a space between the *wall*—not the back flange plane—and the channel-shaped portion, the space between the channel-shaped portion and the back flange plane could be less than that needed to accommodate two layers of 5/8" drywall (1 1/4"), as long as the back of the channel-shaped portion was at least 1 1/4" from the wall. In other words, the "extension portion spacing the channel-shaped portion from the back flange plane" could be 1 1/4" subtracted by the thickness of the back flange – i.e., not "a distance sized large enough to permit the two layers of 5/8-inch-thick drywall."

Neither Yamaguchi nor Bundy discloses an "extension portion spacing the channel-shaped portion from the back flange plane by a distance sized large enough to permit the two layers of 5/8-inch-thick drywall of the fire separation wall to be

received between the channel-shaped portion and the back flange plane." Nor would the petition's reasoning for modifying Yamaguchi in view of Bundy necessarily result in the claimed spacing. *Apple Inc. v. Voip-pal.com, LLC.*, IPR 2016-01201, Paper 54 at 23 (P.T.A.B. Nov. 20, 2017) ("Petitioner's position in that regard is not grounded in what a skilled artisan would have gleaned from the teachings of the prior art, and is instead an impermissible exercise of hindsight with the claims of the '815 patent serving as a guide.").

C. Neither Yamaguchi nor Bundy Discloses "an Extension Portion Including a First Extension Flange Extending From the Back Flange of the Connection Portion to the Channel-Shaped Portion"

Claim 1—the independent claim of the '626 Patent from which Claims 2-52 depend—requires an "an extension portion including a first extension flange extending from the back flange of the connection portion to the channel-shaped portion."

In attempting to correlate the components of Yamaguchi to the '626 Patent claim limitations, Simpson identifies the components (highlighted in green below) between the back flange of the connection portion (highlighted in blue below) and the channel-shaped portion (highlighted in red below) as the recited extension flange.

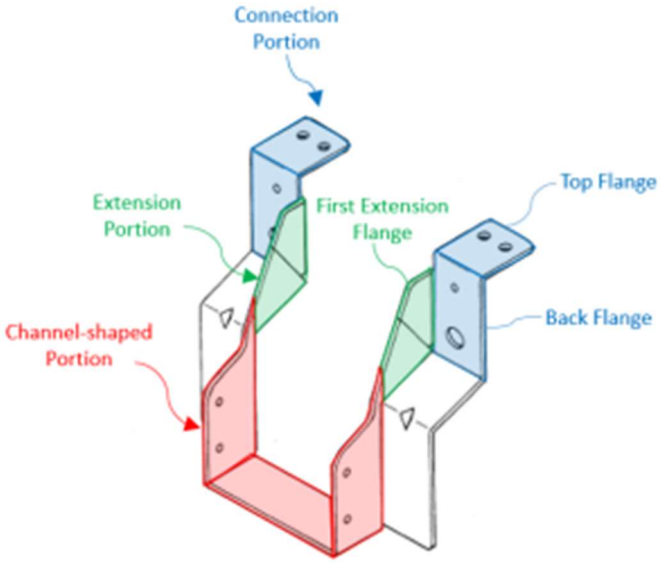

EX1041, Perspective View (annotated); Pet: 20, 25, 27.

Simpson's identification of the extension flange in Yamaguchi fails to account for Claim 1's requirement that a *single* extension flange extends from the connection portion to the channel-shaped portion in the '626 Patent. What Simpson identifies as the extension flange in Yamaguchi is actually comprised of a composite of two separate flanges—one extending from the connection portion, the other extending from the back flange. Simpson acknowledges this. *See* Pet: 21 ("combination of two abutting pieces of sheet metal (that may or may not be joined together; e.g., via welding)"). As such, the embodiment does not disclose "an extension portion including a first extension flange extending from the back flange of the connection portion to the channel-shaped portion."

In an effort to overcome this shortcoming, Simpson relies on the Usage View to assert that the Usage View presents a second embodiment of the extension portion "alternatively formed by bending a contiguous piece of sheet metal along a fold line" along the side edge of the back flange "such that the extension portion spans between the back flange and the channel-shaped portion with no intervening components therebetween." Pet: 21-22.

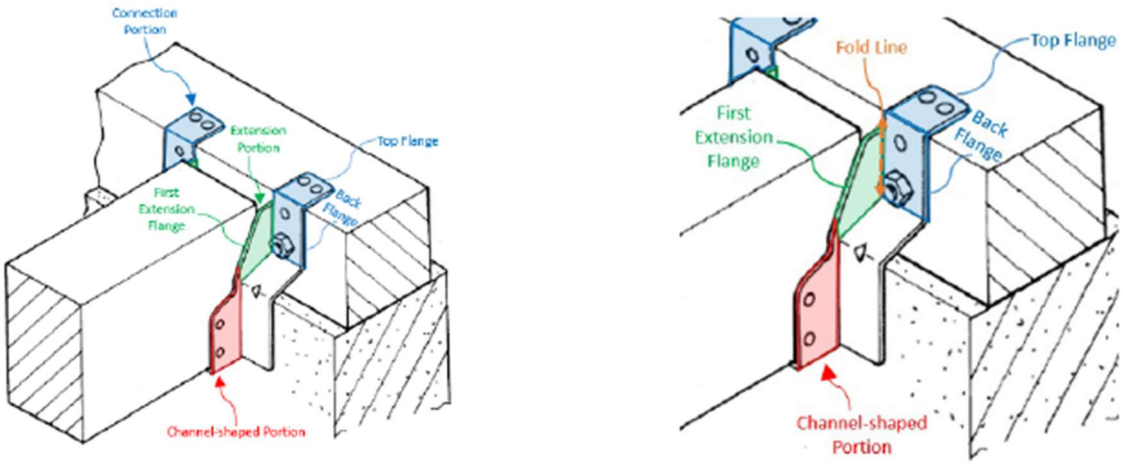

EX1041, Usage View (annotated); Pet: 21

However, this argument ignores that Yamaguchi is a design patent application, and that the Usage View is the same embodiment as the Perspective View and is simply omitting certain details, i.e., the join line crossing the flange. As such there is but a single embodiment—comprising a combination of two distinct extension flanges to form a single extension portion—is the only embodiment of the extension portion.

As such, the extension portion of Yamaguchi—as identified by the Petition—does not comprise an extension flange that both extends from the back flange of the connection portion and extends to the channel-shaped portion. As the Petition relies on Yamaguchi to disclose the first extension flange meeting these requirements, Simpson has failed to meet its *prima facie* case of obviousness under Ground 1 with respect to claims 1-52 of the '626 Patent.[3]

VII. NONE OF THE CLAIMS WOULD HAVE BEEN OBVIOUS OVER CULLEN IN VIEW OF BUNDY

Simpson argues that "Cullen discloses each and every structural element" listed in the independent claims of the '626 Patent, with the exception that it does not "explicitly disclose that the space defined between its channel-shaped portion and back flange is sized large enough to receive two layers of 5/8-inch-thick drywall therein." Pet: 70. For this missing element, Simpson relies on Bundy.

Despite its assertions, Simpson fails to meet its *prima facie* case of obviousness as Cullen's principal of operation was to abut the end of the joist against the back flange, such that none of the components of the Cullen hanger qualify as an extension portion.

[3] Claims 2-52 depend from Claim 1, and as such Simpson has failed to meet its burden to demonstrate obviousness with respect to any of these claims.

A. Cullen Fails to Disclose an "Extension Portion Spacing the Channel-Shaped Portion from the Back Flange Plane" or "an Extension Flange"

Independent Claims 1 and 53 of the '626 Patent require: (1) "a channel-shaped portion configured to receive the structural component," (2) "a connection portion," and (3) "an extension portion spacing the channel-shaped portion from the back flange plane." EX1001: 12:14-19, 18:16-21. Simpson argues that Cullen discloses each of these components by arbitrarily designating components of the Cullen hanger as follows:

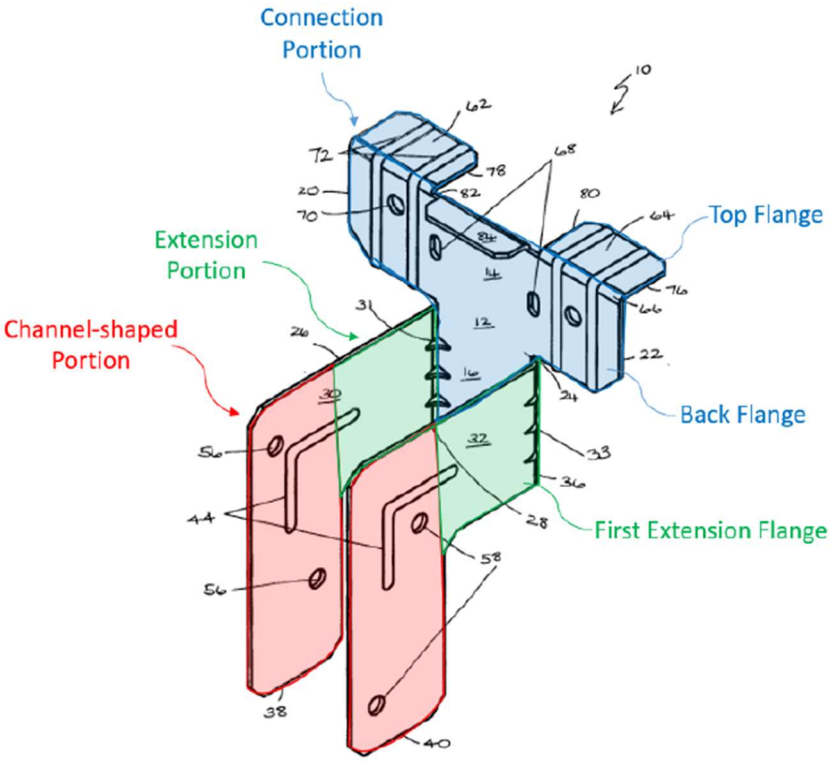

EX1039, Fig. 1 (annotated); Pet: 79, 80

Notably, one of the key inventive concepts of claim of the '626 Patent was the use of an extension portion to separate the joist from the wall structure while

transferring the downward load and resisting the momentary forces. But in contrast, what Simpson identifies as the extension portion of Cullen (highlighted in green above) does not serve to create any spacing between the joist and the wall structure. Rather, Figure 3 demonstrates that what Simpson arbitrarily attempted to segregate into an extension portion and a channel shaped portion were both collectively configured to receive the structural component.

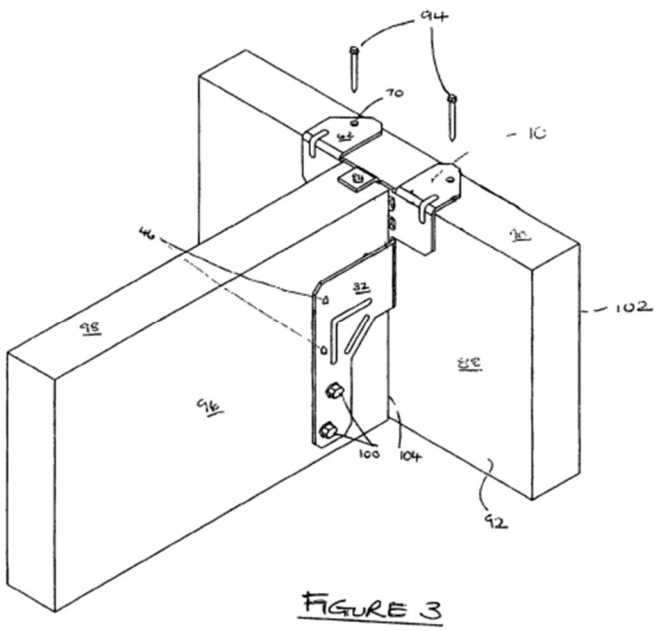

EX1039: Fig. 3

Cullen does not contemplate any spacing between the joist and the back flange. Rather, each of the side walls (30, 32) is intended to engage the joist until it meets the barbing present where the side walls meet the back flange (31, 33) and the location tab (84), thereby allowing the joist to abut the back flange. EX1039: Figs.

1 and 3, 4:8-12 ("Preferably, the bracket includes one or more barbs. Preferably the one or more barbs are arranged to allow insertion of a joist into the bracket, but prevent its withdrawal. . .."); 13:1-5 ("The tab 84 is arranged so that the top surface of a joist located against it at the surface 86 will align with the top surface of the sill or bearing member."). Contrary to Simpson's assertions, the entirety of the side walls (30, 32) constitutes the channel shaped portion, and Cullen fails to disclose an extension portion. Moreover, Cullen fails to disclose any spacing between the channel-shaped portion and the back flange as the channel-shaped portion is directly connected to the back flange. Thus, there is no "extension portion" or "extension flange" as required by claims 1 and 53.

As the Petition relies on Cullen as allegedly disclosing the channel shaped portion and the extension portion as distinct components, Simpson has failed to meet its *prima facie* case of obviousness under its Cullen based obviousness grounds with respect to any of the claims of the '626 Patent.[4]

VIII. NONE OF THE CLAIMS WERE OBVIOUS OVER ADAMS IN VIEW OF BUNDY

[4] Claims 2-52 depend from Claim 1 and Claims 54-104 depend from Claim 53, and as such Simpson has failed to meet its burden to demonstrating obviousness with respect to any of the claims.

Similar to the Yamaguchi and Cullen grounds before it, Simpson argues that "Adams discloses each and every structural element" listed in the independent claims of the '626 Patent, with the exception that it does not "explicitly disclose that the space defined between its channel-shaped portion and back flange is sized large enough to receive two layers of 5/8-inch-thick drywall therein." Pet: 121. And as in the Yamaguchi and Cullen grounds, Simpson argues that a POSITA would have sought to modify Adam's hanger to meet this missing element based on the teachings of Bundy. *Id*.

Despite its assertions, Simpson fails to meet its *prima facie* case of obviousness as Adams's principal of operation was to abut the end of the joist against the back flange, such that none of the components of the Adams hanger qualify as an extension portion and the drywall could not be received between the channel-shaped portion and the back flange plane.

A. <u>Adams Does Not Disclose an "Extension Portion Spacing the Channel-Shaped Portion from the Back Flange Plane" or "an Extension Flange"</u>

Independent Claims 1 and 53 of the '626 Patent require: (1) "a channel-shaped portion configured to receive the structural component," (2) "a connection portion," and (3) "an extension portion spacing the channel-shaped portion from the back flange plane." EX1001: 12:14-19, 18:16-21. Simpson argues that Adams discloses

each of these components by designating the components of the Adams hanger as follows:

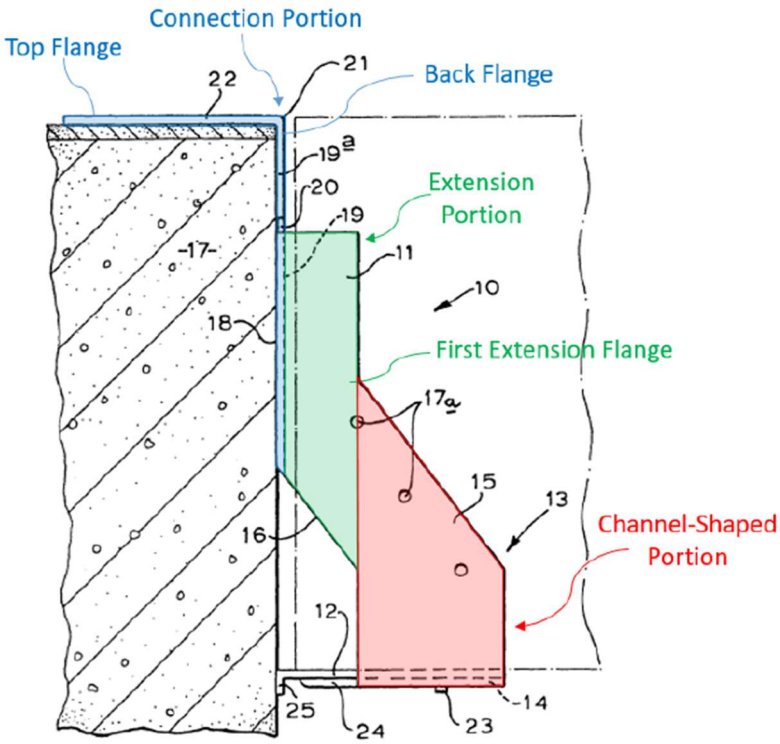

EX1040, FIG. 2 (annotated).

As stated above with respect to the Cullen grounds, the use of an extension portion to separate the joist from the wall structure while transferring the downward load and resisting the momentary forces was one of the key inventive concepts of claim of the '626 Patent. Contrary to Simpson's characterizations, Adams does not teach this inventive concept for which the '626 patent's claims are directed as the Adams hanger does not disclose a channel-shaped portion that is spaced from a back plane of the back flange, and therefore does not provide a space between the end of the joist member and the wall structure.

The portion of Adams hanger that Simpson identifies as the extension portion (highlighted in green above) does not serve to create any spacing between the joist and the wall structure. Rather, Fig. 2 demonstrates that the highlighted green portion is merely part of the channel shaped portion that receives the structural component.

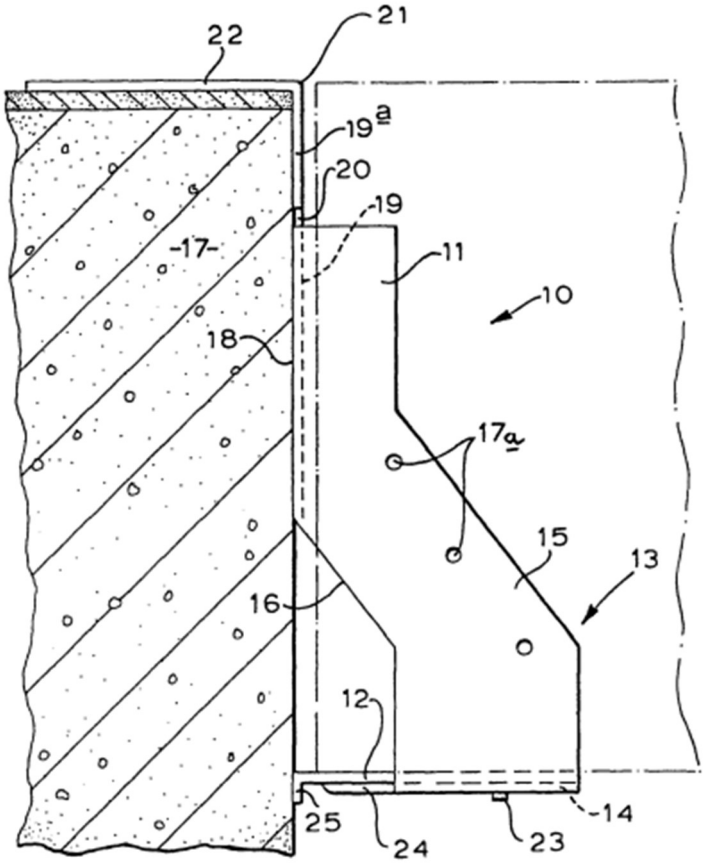

FIG 2

EX1040, Fig. 2.

Notably, each of the side walls (15) is intended to engage the joist until it meets the back flange (19)—or at least is in close proximity—with further support from a shoe plate (12). EX1040: Fig. 2; 10:42-48 ("A joist hanger. . . further

characterized in that the side walls (15) extend generally rearwardly and upwardly from the base (14) . . . further characterized in that a shoe plate (12) is secured to the base of the stirrup portion (13) to enlarge its effective area."). Thus, the side walls and shoe plate are correctly understood as being part of the channel-shaped portion because all of these structures receive the joist. Thus, there is no "extension portion" or "extension flange" as required by claims 1 and 53.

As the Petition relies on Adams as allegedly disclosing the channel shaped portion and the extension portion as distinct components, Simpson has failed to meet its *prima facie* case of obviousness under its Adams based obviousness grounds with respect to any of the claims of the '626 Patent.[5]

B. <u>The Modification of Adams in View of Bundy "to Permit the Two Layers of 5/8-Inch-Thick Drywall of the Fire Separation Wall to be Received Between the Channel-Shaped Portion and the Back Flange Plane" Would Change Adam's Principle of Operation</u>

Independent Claims 1 and 53 of the '626 Patent require an "extension portion spacing the channel-shaped portion from the back flange plane by a distance sized large enough to permit the two layers of 5/8-inch-thick drywall of the fire separation wall to be received between the channel-shaped portion and the back flange plane."

---

[5] Claims 2-52 depend from Claim 1 and Claims 54-104 depend from Claim 53, and as such Simpson has failed to meet its burden to demonstrating obviousness with respect to any of the claims.

EX1001: 12:28-33, 18:30-35. Simpson acknowledges that Adams does not "explicitly disclose that the space defined between its channel-shaped portion and back flange is sized large enough to receive two layers of 5/8-inch-thick drywall therein." Pet: 121. For this missing element, Simpson relies on Bundy, arguing that a POSITA would have sought to modify Adam's hanger to receive the drywall. Pet: 121.

Adams specifically contemplates that there would be registration between hanger and the wall surface at or near its base. EX1040: Fig. 2, 5:35-38 ("any load tending to 'straighten' the joist hanger is carried as a reaction load on the downwardly turned rear edge 25 of the shoe plate"), 10:49-53("A joist hanger. . . further characterized in that the shoe plate extends rearwardly of the base and has a rear edge portion (25) substantially coplanar with the abutment portions (19).").

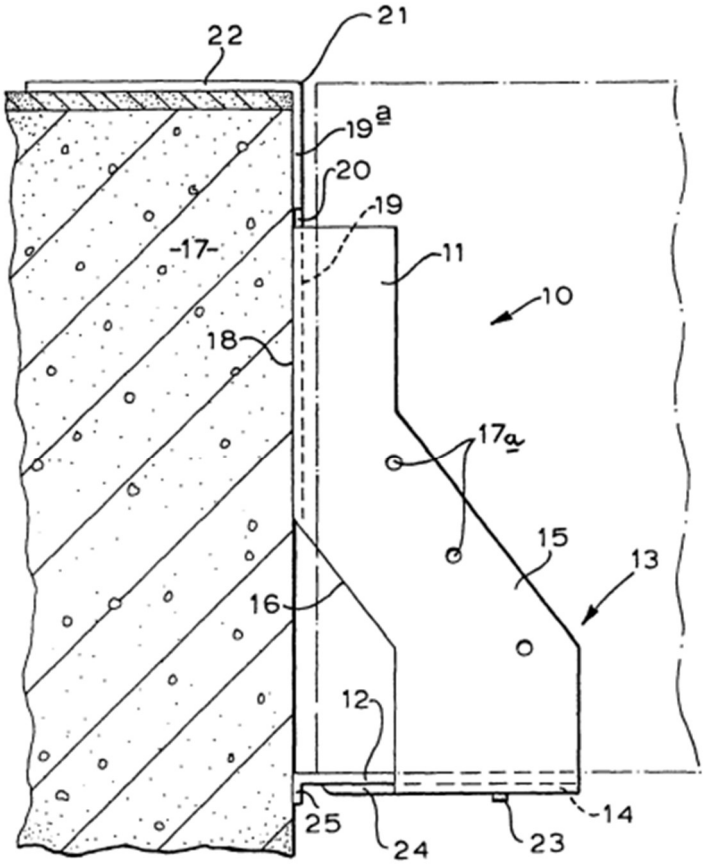

FIG 2

EX1040, Fig. 2.

And while the shoe plate is described as optional, Adams further clarifies that if the shoe plate were omitted the "[i]t would then be necessary to use a stirrup which made contact at its rear edge with the supporting structure." EX1040: 5:46-48. Adams discloses such an embodiment where the shoe plate is omitted and replaced by a base of the stirrup (56) extending to the wall surface in Figure 11. EX140: Fig. 11.

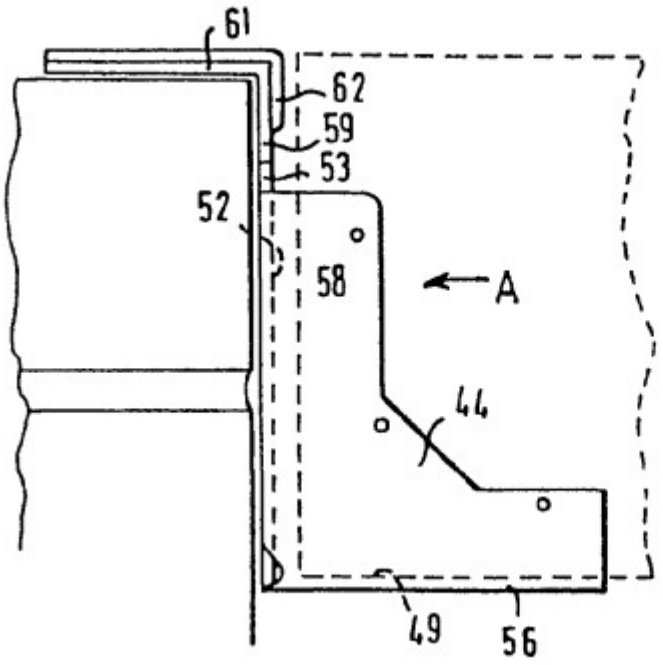

FIG 11

EX1040, Fig. 11.

As such, even to the extent that the structural member was spaced a sufficient distance from Adam's abutment portion (19), the space would still be blocked by shoe plate or the base (56) of the stirrup. The space is not capable of receiving drywall.

Nor would modifying Adams to create such a space be obvious. Removing the shoe plate or cutting back the base of the stirrup would completely change the principle of operation according to which the lower edge of the hanger supports a reaction load. Accordingly, Simpson's modification of Adams to create a space to receive drywall would change Adam's principle of operation. *Plas-Pak Indus., Inc. v. Sulzer Mixpac AG*, 600 Fed. Appx. 755, 758 (Fed. Cir. 2015) (finding that

modifications and substitution cannot change the basic principles under which the prior art was designed to operate). The proposed modification of Adams is improper, and the combination fails. Claims 1 and 53 are nonobvious and patentable over Adams and Bundy.[6]

IX. CONCLUSION

Simpson has failed to demonstrate that any of the '626 Patent's claims are invalid. Patent Owner respectfully requests that the Board deny the Petition.

Dated: June 21, 2024

Respectfully submitted,

/Kurt F. James/
Kurt F. James, Reg. No. 33,716
Counsel for Patent Owner

[6] Claims 2-52 depend from Claim 1 and Claims 54-104 depend from Claim 53, and as such Simpson has failed to meet its burden to demonstrate obviousness with respect to any of the claims.

CERTIFICATE OF SERVICE

Under 37 C.F.R. § 42.6(e), the undersigned certifies that on June 21, 2024, a copy of the foregoing PATENT OWNER'S RESPONSE was served via email on the following:

Michelle K. Holoubek (Reg. No. 54,179)
John Higgins (Reg. No. 74,992)
Sterne, Kessler, Goldstein & Fox P.L.L.C.
1100 New York Avenue, N.W.
Washington, DC 20005
T: 202-371-2600
F: 202-371-2540
holoubek-PTAB@sternekessler.com
jhiggins-PTAB@sternekessler.com
PTAB@sternekessler.com

Joseph V. Mauch (*Pro Hac Vice* To Be Filed)
Shartsis Friese LLP
One Maritime Plaza, Eighteenth Floor
San Francisco, CA 94111
Tel.: 415-421-6500
Fax: 415-421-2922
jmauch@sflaw.com

By: /*Kurt F. James*/
Lead Counsel for Patent Owner
Kurt F. James
Reg. No. 33,716

CERTIFICATE OF COMPLIANCE WITH TYPE-VOLUME REQUIREMENTS UNDER 37 C.F.R. § 42.24

Under 37 C.F.R. § 42.24(d), the undersigned certifies that this Patent Owner Preliminary Response complies with the type-volume limitation of § 42.24(b)(2) because it contains 5,566 words, excluding the parts of the Patent Owner's Response exempted by § 42.24(a).

This paper also complies with the typeface requirements of 37 C.F.R. § 42.6(a)(2)(ii) and the type style requirements of 37 C.F.R. § 42.6(a)(2)(iii) and (iv).

Dated: June 21, 2024

Respectfully submitted,

/Kurt F. James/

Kurt F. James, Reg. No. 33,716
STINSON LLP
7700 Forsyth Boulevard, Suite 1100
St. Louis, MO 63105
T: 314-345-7010; F: 314-863-9388
Email: kurt.james@stinson.com

Counsel for Patent Owner, Columbia Insurance Company