US009394680B2

(12) **United States Patent**
Bundy et al.

(10) **Patent No.: US 9,394,680 B2**
(45) **Date of Patent: Jul. 19, 2016**

(54) **DRYWALL JOIST HANGER**

(71) Applicant: **Simpson Strong-Tie Company, Inc.**, Oakland, CA (US)

(72) Inventors: **Gregory D. Bundy**, Columbus, OH (US); **Dustin P. Muhn**, San Francisco, CA (US); **Thomas G. Evans**, Dublin, CA (US); **Daniel M. Gray**, McKinney, TX (US)

(73) Assignee: **Simpson Strong-Tie Company**, Pleasanton, CA (US)

(*) Notice: Subject to any disclaimer, the term of this patent is extended or adjusted under 35 U.S.C. 154(b) by 0 days.

(21) Appl. No.: **14/106,714**

(22) Filed: **Dec. 14, 2013**

(65) **Prior Publication Data**

US 2015/0167291 A1 Jun. 18, 2015

(51) **Int. Cl.**

E04B 1/26	(2006.01)
E04B 5/12	(2006.01)
E04B 1/94	(2006.01)

(52) **U.S. Cl.**

CPC ***E04B 1/2612*** (2013.01); *E04B 1/26* (2013.01); *E04B 1/94* (2013.01); *E04B 5/12* (2013.01)

(58) **Field of Classification Search**

CPC E04B 1/2612
USPC 52/262, 283, 289, 702
See application file for complete search history.

(56) **References Cited**

U.S. PATENT DOCUMENTS

537,505	A	*	4/1895	Van Dorn	29/897.3
1,692,351	A		11/1928	Ropp	
1,728,981	A		9/1929	Ropp	
2,717,801	A	*	9/1955	Neil	E04G 21/16 212/234
2,815,546	A		12/1957	Kenk	
2,911,690	A	*	11/1959	Sanford	E04B 1/2608 248/214
3,125,785	A		3/1964	Conville	
3,420,560	A		1/1969	Pfahning	
3,907,445	A		9/1975	Wendt	
3,945,741	A	*	3/1976	Wendt	E04B 1/5818 403/191
3,972,169	A	*	8/1976	Sheppard, Jr.	E04B 1/2612 248/300
3,989,398	A		11/1976	Wendt	
4,038,796	A	*	8/1977	Eckel	E04B 2/721 52/220.7
4,196,556	A		4/1980	Russo	
4,283,892	A		8/1981	Brown	
4,353,664	A		10/1982	Gilb	
4,411,548	A	*	10/1983	Tschan	E04B 1/2612 403/232.1

(Continued)

FOREIGN PATENT DOCUMENTS

EP	1672133 A2	6/2006
GB	185694 A	9/1922

(Continued)

OTHER PUBLICATIONS

Simpson Strong-Tie, "Wood Construction Connectors: 2013-2014", pp. front cover,69,78,83,86,89,91,100,108,110,118,134,162, back cover, C-2013, Simpson Strong-Tie Company, Inc., Pleasanton.

(Continued)

Primary Examiner — Ryan Kwiecinski
(74) *Attorney, Agent, or Firm* — James R. Cypher; Charles R. Cypher

(57) **ABSTRACT**

A connection utilizing a joist hanger to hang a generally horizontal joist or beam from a wood structural support member such as a top plate or header in cooperation with a first plurality of fasteners such as screws and one or more generally vertical drywall panels.

23 Claims, 13 Drawing Sheets

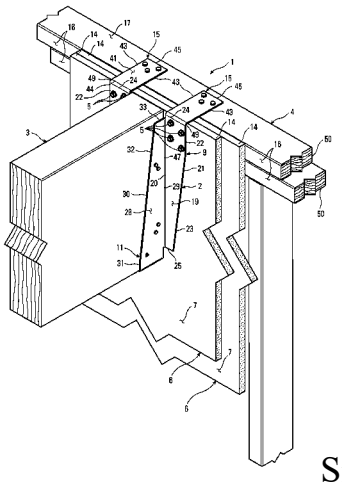

(56) **References Cited**

U.S. PATENT DOCUMENTS

4,422,792 A 12/1983 Gilb
4,423,977 A 1/1984 Gilb
4,455,805 A 6/1984 Rionda et al.
4,498,801 A 2/1985 Gilb
4,527,375 A 7/1985 Braginetz
4,555,887 A 12/1985 Rionda et al.
4,561,230 A 12/1985 Rionda et al.
4,764,069 A 8/1988 Reinwall et al.
4,893,961 A 1/1990 O'Sullivan et al.
4,920,725 A * 5/1990 Gore E04B 1/2612 403/232.1
4,949,929 A 8/1990 Kesselman et al.
4,982,548 A * 1/1991 Abbey E04B 1/0007 403/232.1
5,104,252 A * 4/1992 Colonias E04B 1/2612 403/230
5,201,156 A 4/1993 Newman
5,228,261 A 7/1993 Watkins
5,394,668 A 3/1995 Lim
5,437,137 A 8/1995 Allen
5,555,694 A * 9/1996 Commins E04B 1/2612 248/300
5,564,248 A * 10/1996 Callies E04B 1/2612 403/232.1
5,598,680 A 2/1997 Wilhelmi
5,603,580 A * 2/1997 Leek E04B 1/2612 403/168
5,625,995 A 5/1997 Martin
5,657,596 A 8/1997 Powers, III
5,692,864 A 12/1997 Powell et al.
5,829,216 A * 11/1998 Newcomb E04F 13/0807 52/167.1
5,836,131 A 11/1998 Viola et al.
6,131,358 A * 10/2000 Wise E04B 1/2612 52/289
6,254,306 B1 7/2001 Williams
6,295,773 B1 10/2001 Alty
6,427,391 B1 8/2002 Lyons
6,463,711 B1 * 10/2002 Callies E04B 1/2612 403/232.1
6,662,511 B1 12/2003 Alty
6,817,157 B2 11/2004 Bourque
6,877,291 B2 * 4/2005 Shamroukh E04B 7/022 403/232.1
6,945,004 B1 9/2005 Ghiringhelli
7,243,464 B1 * 7/2007 Crowell E02D 27/01 52/262
7,254,926 B2 8/2007 Eldeen
7,334,372 B2 * 2/2008 Evans E04B 1/2612 52/289
7,461,494 B2 12/2008 Frezza
7,882,665 B2 * 2/2011 Kawai E04B 1/08 52/204.2
7,905,067 B2 * 3/2011 Schiffmann B29C 70/443 52/169.9
8,051,620 B2 11/2011 Kittlitz et al.
8,250,827 B2 * 8/2012 Lin et al. 52/702
8,322,096 B2 * 12/2012 Visser 52/289
8,720,155 B1 * 5/2014 Robell E04B 1/2612 52/289
2002/0078656 A1 * 6/2002 Leek E04B 1/2612 52/702
2003/0009980 A1 * 1/2003 Shahnazarian E04B 1/2608 52/712
2004/0129845 A1 * 7/2004 Whale E04B 1/2612 248/201
2005/0120669 A1 * 6/2005 Harrison E04B 1/2612 52/698
2006/0130414 A1 * 6/2006 Walther E04B 1/003 52/289
2007/0119108 A1 * 5/2007 Downard E04B 1/2604 52/289
2007/0294979 A1 * 12/2007 Lin E04B 1/2612 52/702
2008/0101855 A1 * 5/2008 Lin E04B 1/2612 403/232.1
2008/0256884 A1 * 10/2008 Clarizia E04B 1/2612 52/309.3
2008/0282633 A1 * 11/2008 Buckholt E04B 1/78 52/309.8
2009/0113839 A1 * 5/2009 Carr E04B 1/2612 52/712
2010/0031601 A1 * 2/2010 Lin E04B 1/2612 52/712
2010/0064626 A1 3/2010 Kittlitz et al.
2010/0125996 A1 * 5/2010 Coffman, Jr. B25C 3/008 29/283
2011/0146173 A1 * 6/2011 Visser E04B 1/26 52/268
2012/0137612 A1 * 6/2012 Buckholt E04B 1/944 52/309.4
2013/0067850 A1 * 3/2013 Sasanecki E04B 1/2612 52/702
2015/0184370 A1 * 7/2015 Brekke E04B 1/2612 52/708

FOREIGN PATENT DOCUMENTS

GB 2452292 A 3/2009
GB 2472692 A 2/2011
WO WO 2011/033289 A1 3/2011

OTHER PUBLICATIONS

Patent Cooperation Treaty (PCT), The International Search Report and the Written Opinion of the International Searching Authority, or the Declaration: PCT/US2014/070142, Apr. 15, 2015, 11 pages, International Searching Authority, European Patent Office, The Netherlands.

* cited by examiner

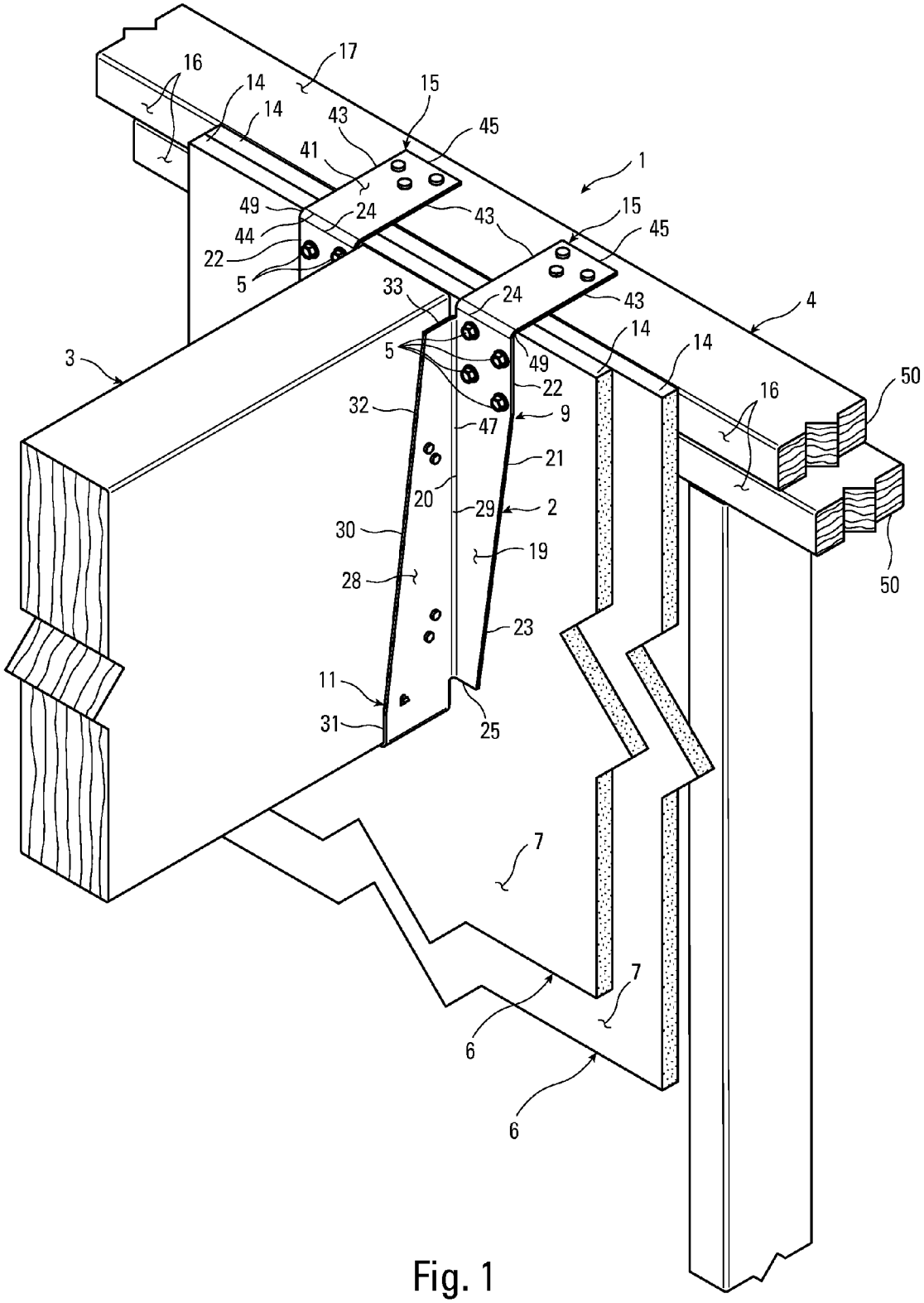
17
16
14
14
15
43
45
41
1
49
24
43
15
44
45
22
5
33
24
43
4
14
14
3
5
49
22
50
16
32
9
47
21
20
29
2
30
19
28
50
23
11
31
25
7
7
6
6

Fig. 1

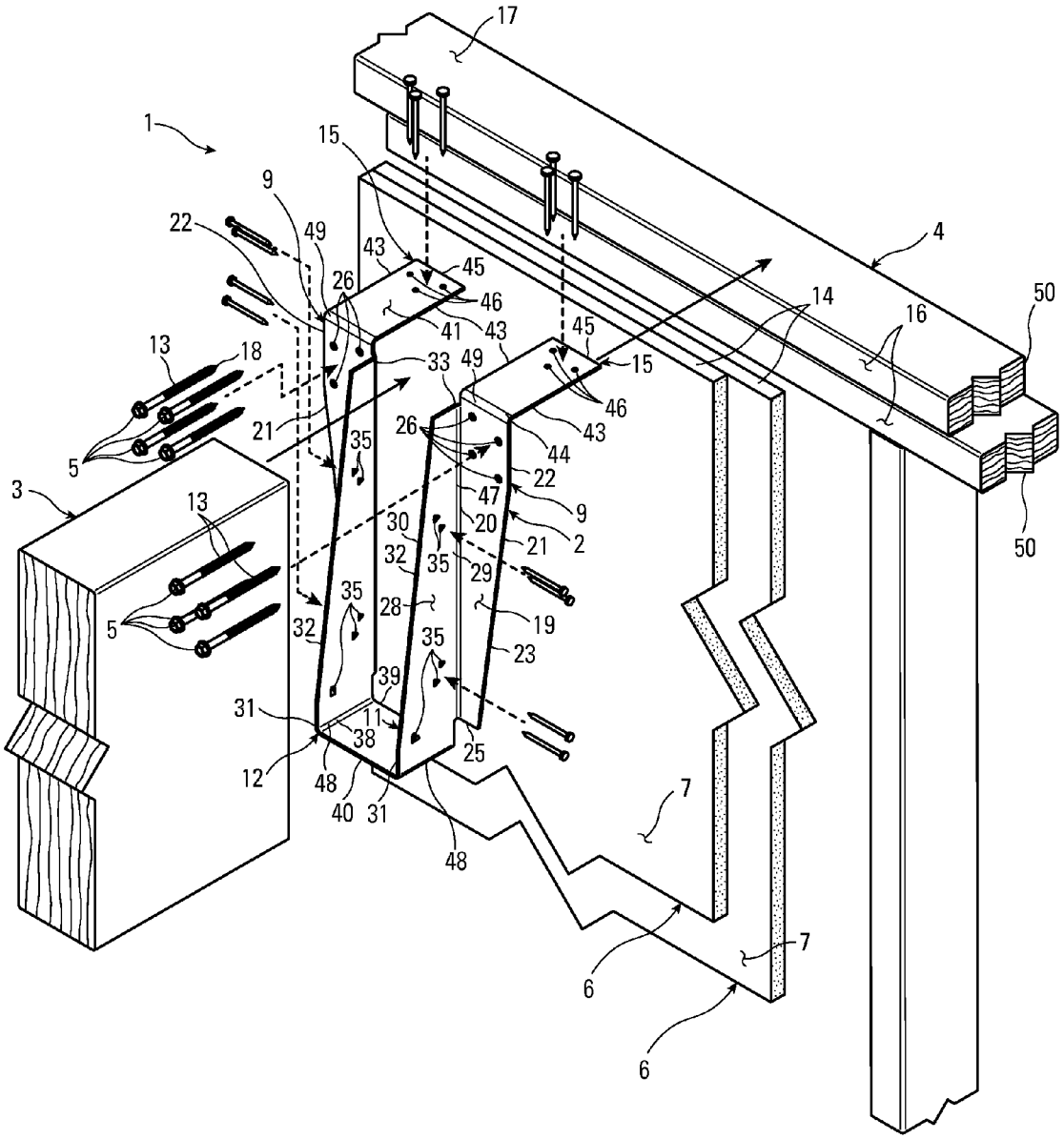
17
1
15
9
22
49
43
45
26
46
41
43
4
14
16
50
13
18
33
49
45
15
46
43
21
26
44
5
35
22
3
13
47
9
30
20
2
32
35
21
29
50
35
28
19
5
32
35
23
39
31
11
38
25
12
48
40
31
48
7
7
6
6

Fig. 2

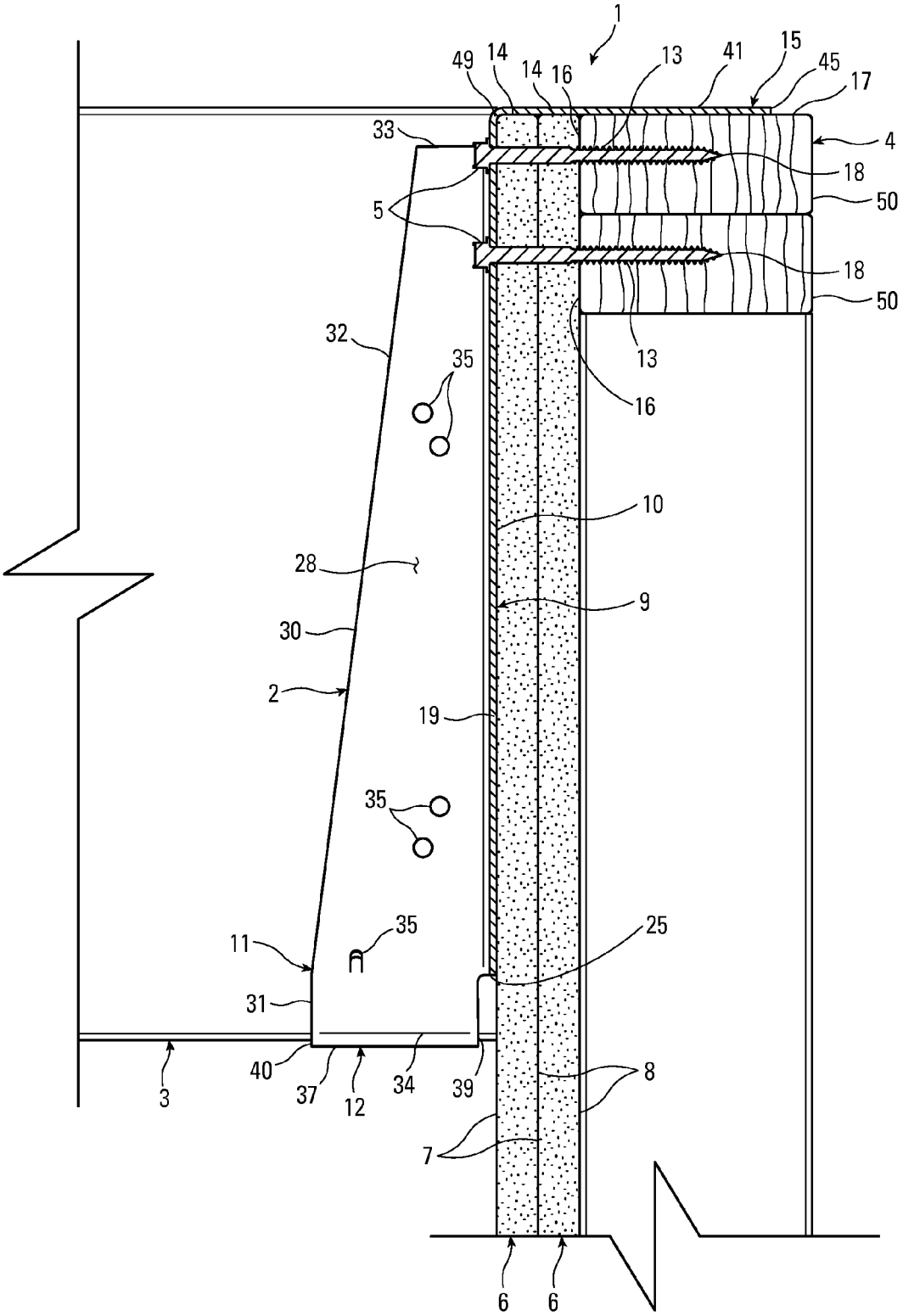
1
49
14
14
16
13
41
15
45
17
33
4
18
5
50
18
50
32
35
13
16
10
28
9
30
2
19
35
35
25
11
31
40
37
12
34
39
8
3
7
6
6

Fig. 3

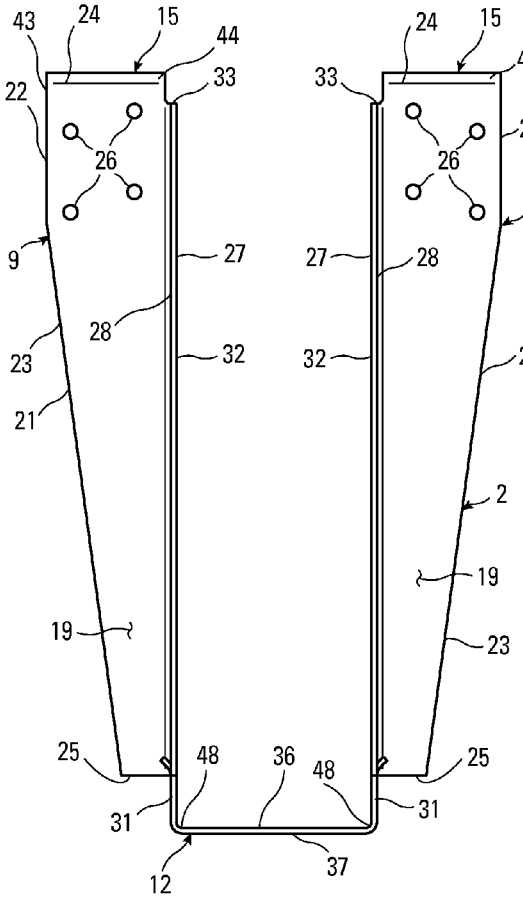
43
24
15
44
33
22
26
9
27
28
23
32
21
19
25
48
36
31
12
37

Fig. 4

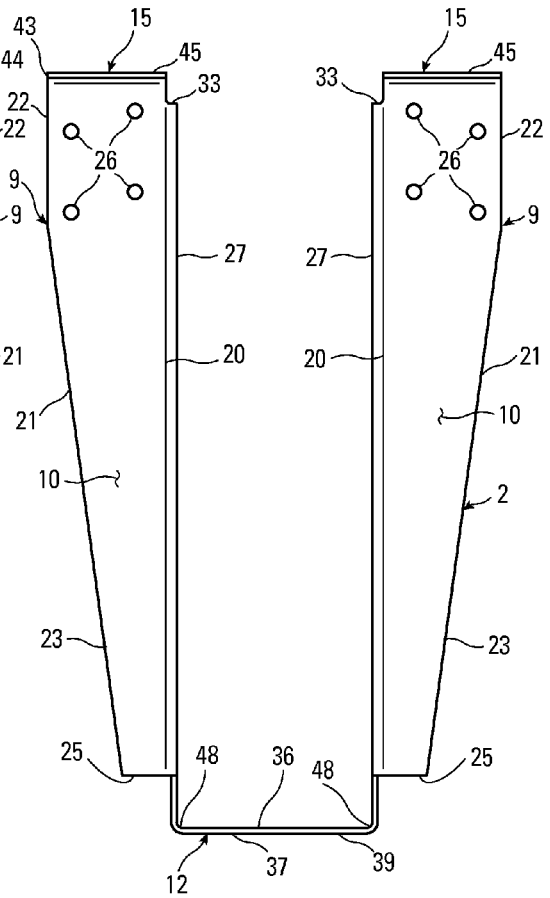
43
15
45
33
22
26
9
27
20
21
10
2
23
25
48
36
12
37
39

Fig. 5

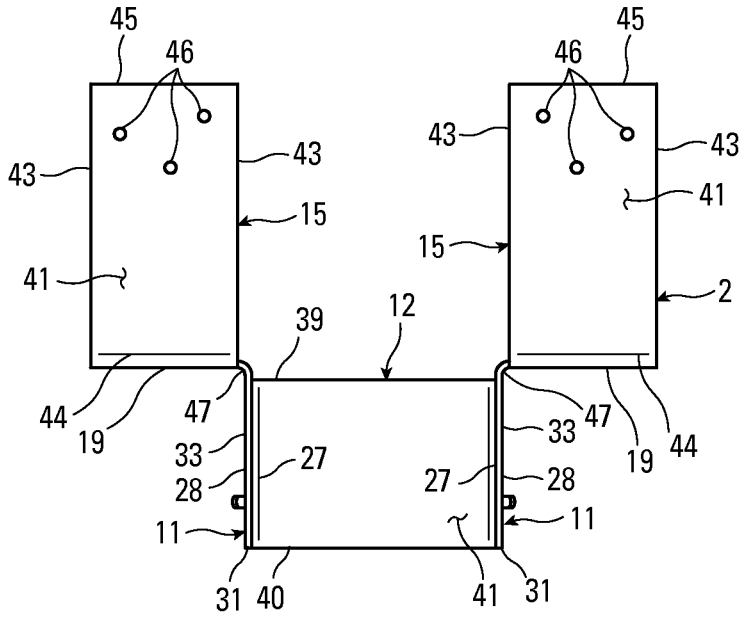
45
46
43
15
41
39
12
44
19
47
33
27
28
11
31
40
2

Fig. 6

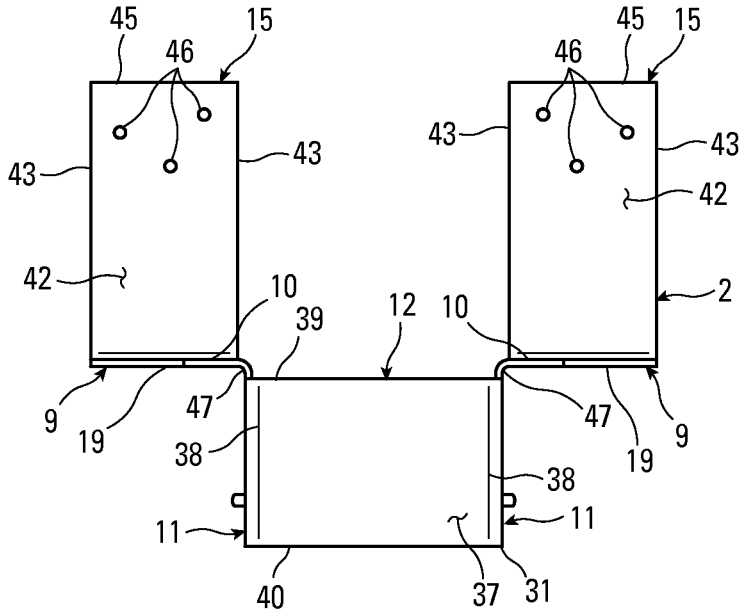
45
15
46
43
42
10
39
12
9
19
47
38
11
40
37
31
2

Fig. 7

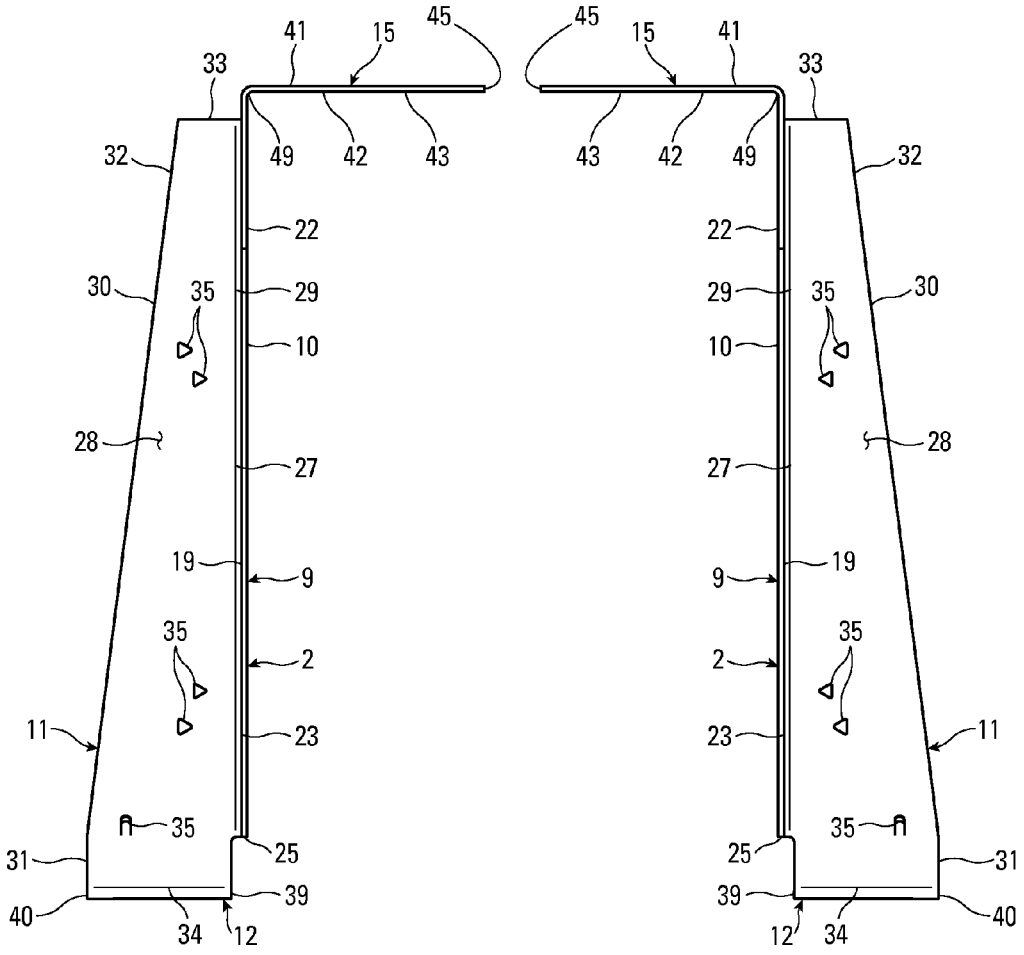
45
41
15
33
32
49
42
43
22
30
35
29
10
28
27
19
9
2
11
23
25
31
39
40
34
12

Fig. 8

Fig. 9

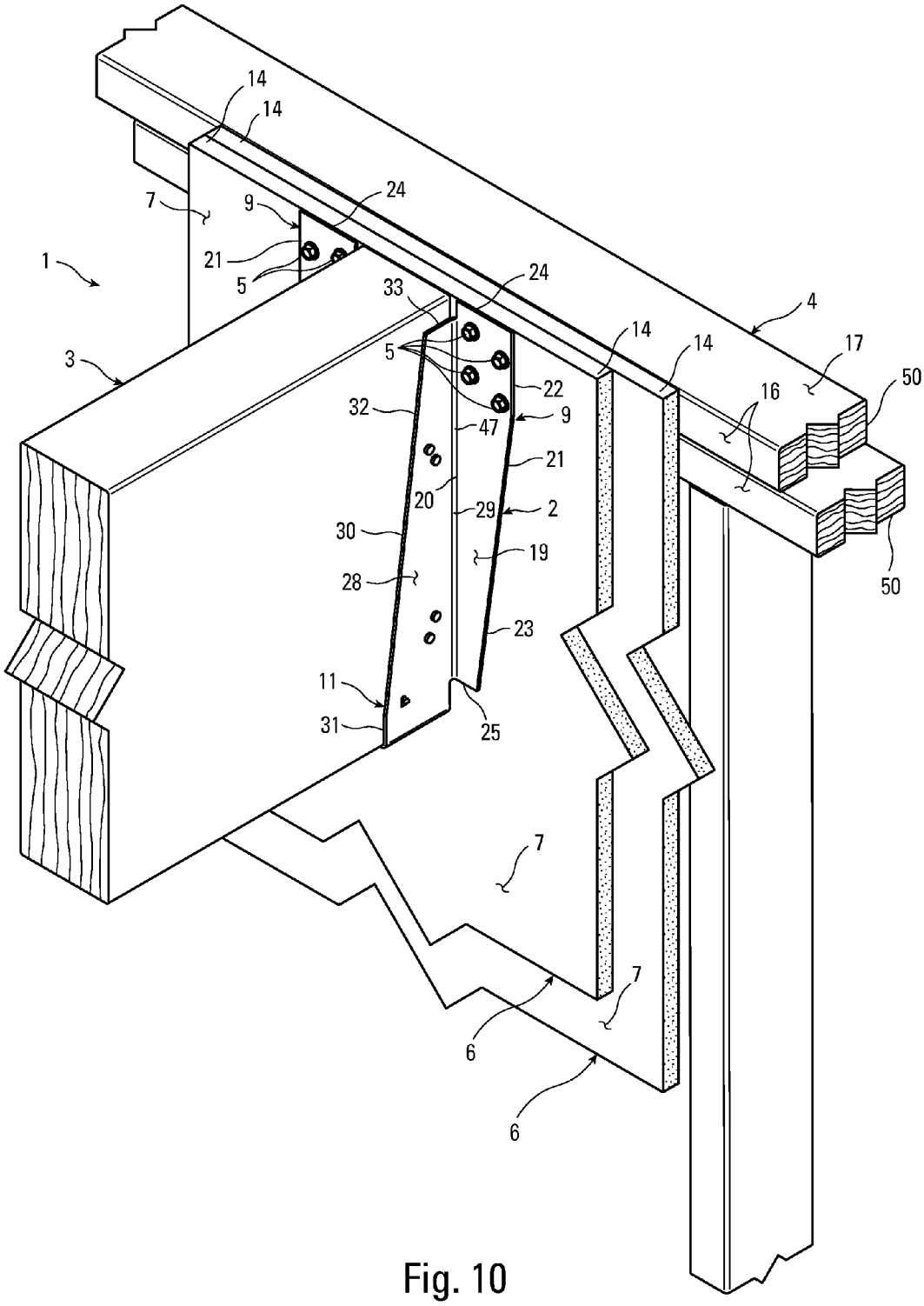
14
14
7
9
24
21
5
1
33
24
4
3
5
14
14
17
50
22
16
32
9
47
21
20
29
2
30
19
28
50
23
11
31
25
7
7
6
6

Fig. 10

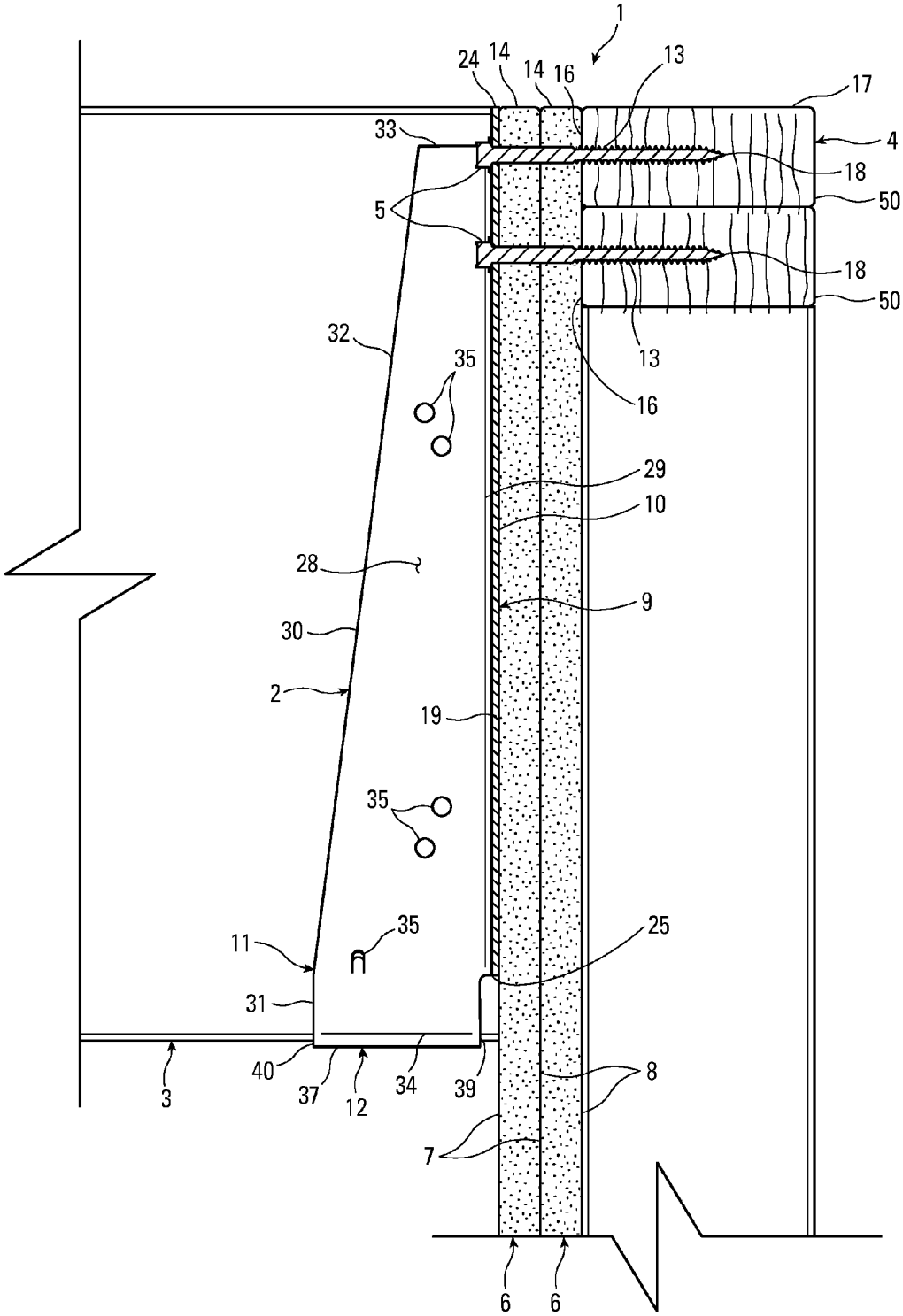
1
24
14
14
16
13
17
33
4
18
50
5
18
50
32
35
13
16
29
10
28
9
30
2
19
35
35
25
11
31
40
37
12
34
39
8
3
7
6
6

Fig. 11

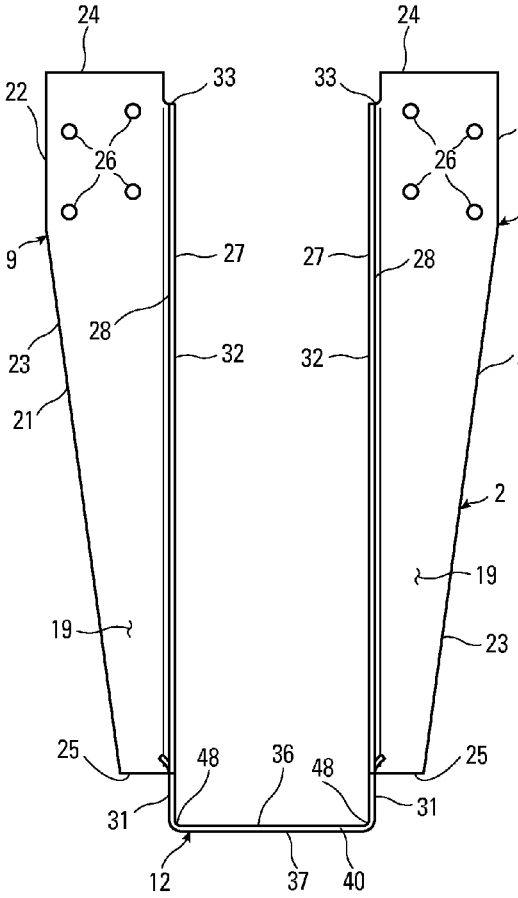
24
22
33
26
9
27
28
23
32
21
19
25
48
36
31
12
37
40

Fig. 12

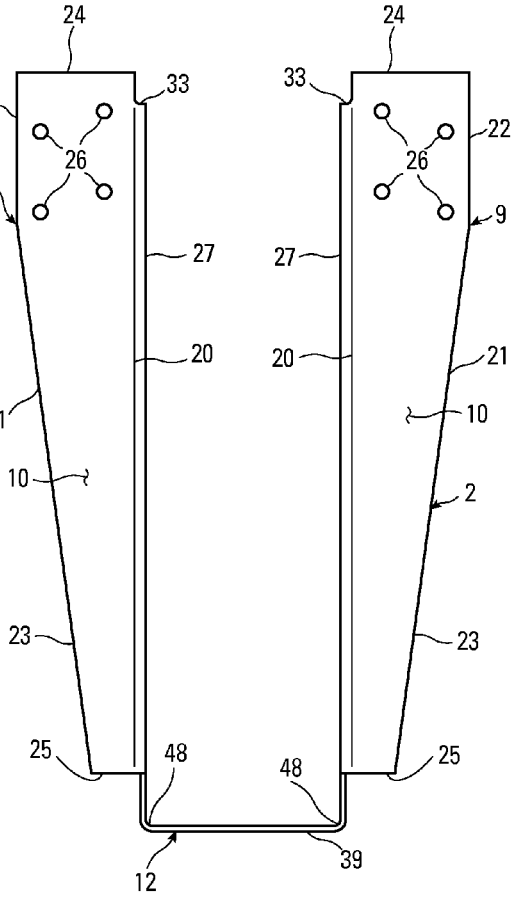
24
22
33
26
9
27
20
21
10
2
19
23
25
48
12
39

Fig. 13

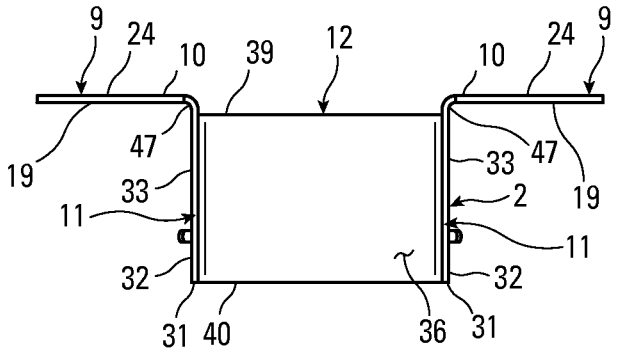
9
24
10
39
12
10
24
9
19
47
33
47
19
33
2
11
11
32
32
31
40
36
31

Fig. 14

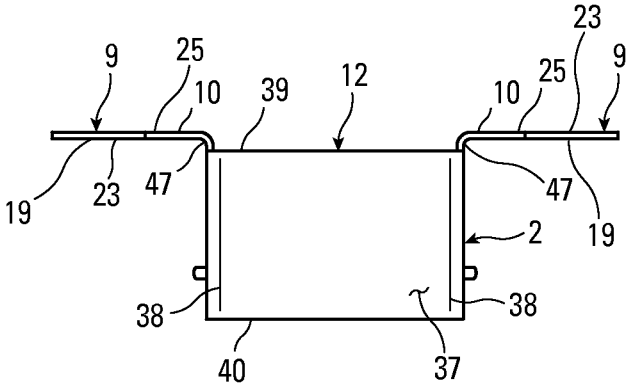
23
9
25
10
39
12
10
25
9
19
23
47
47
19
2
38
38
40
37

Fig. 15

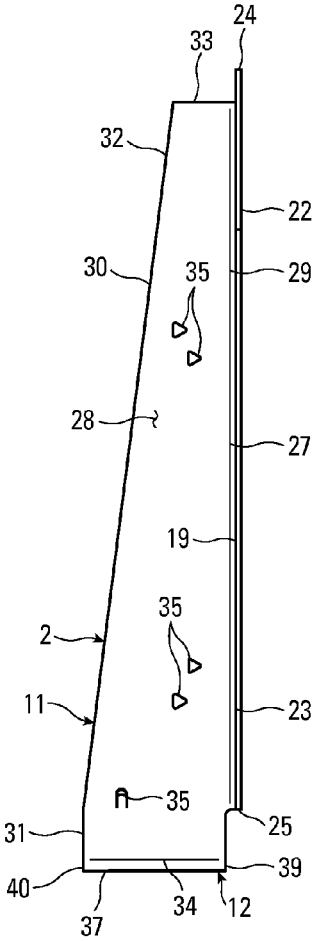
24
33
32
22
30
35
29
28
27
19
35
2
11
23
35
31
25
39
40
34
12
37

Fig. 16

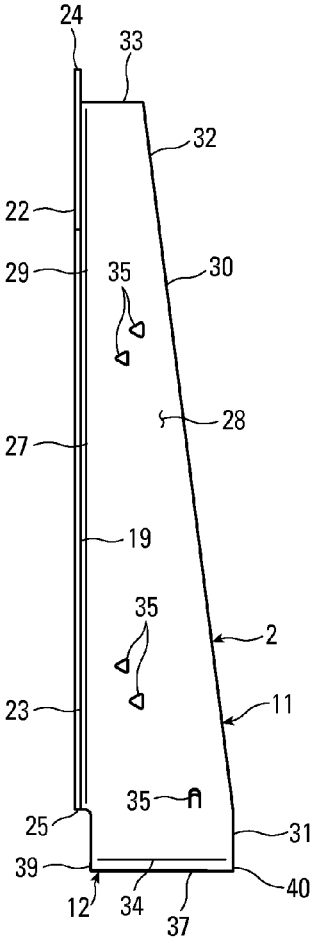
24
33
32
22
29
35
30
28
27
19
35
2
23
11
35
25
31
39
40
12
34
37

Fig. 17

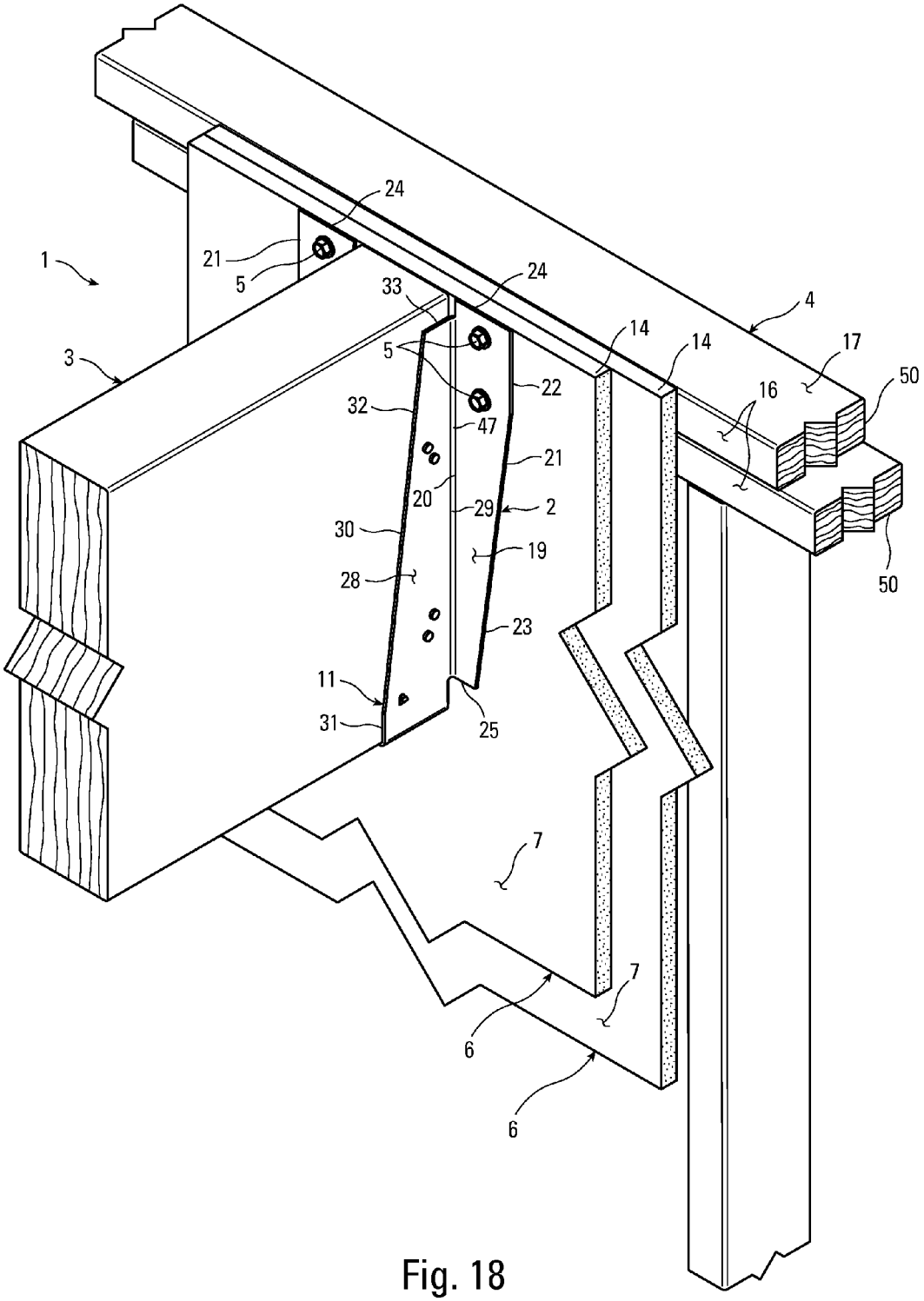
1
3
4
5
5
6
6
7
7
11
14
14
16
17
19
20
21
21
22
23
24
24
25
28
29
30
31
32
33
2
47
50
50

Fig. 18

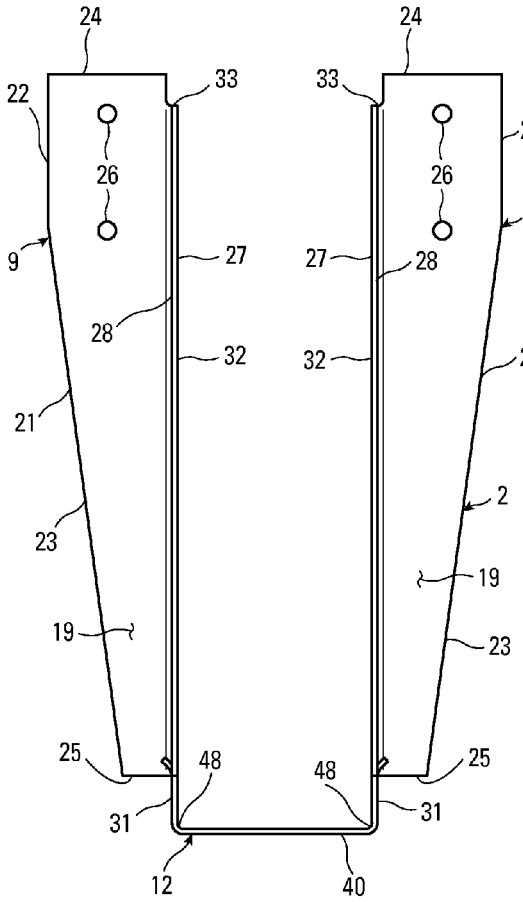
24
22
33
26
9
27
28
32
21
23
19
25
48
31
12
40
2

Fig. 19

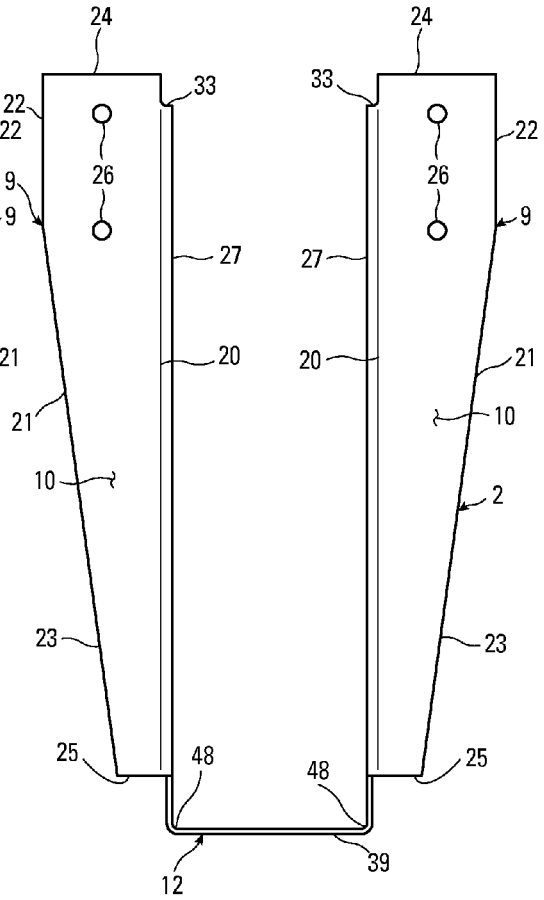
24
22
33
26
9
27
20
21
10
2
23
25
48
12
39

Fig. 20

DRYWALL JOIST HANGER

FIELD OF INVENTION

The present invention relates to building construction and, more particularly, to a joist hanger adapted to secure a joist to a header or other support member with a first drywall panel between the back of the joist hanger and the front of the header. This allows the first drywall panel, which is relatively incombustible, to extend up far enough to cover the front surface of the header.

BACKGROUND

Joist hangers are used in building construction to secure the ends of joists or other members to headers or other support members. Typically, the joist hanger includes a u-shaped portion that receives the joist. The bottom surface of the joist rests on the seat of the hanger, and the side walls of the hanger are dimensioned to closely receive the side faces of the joist, providing it with lateral support.

Where appropriate, the joist may be connected to the hanger by means of nails driven through the side walls into the side faces of the joist. These nails may simply be driven horizontally into the joist, in which case they are preferably short nails that will not pass through the joist. Alternatively, longer nails may be used that are driven horizontally and angularly into the joist such that they are driven into the header as well. This is commonly referred to as toe-nailing. The other common way to nail the hanger to the joist is to use short nails that are driven downward at an angle into the joist only.

Often, in order to connect the joist hanger to the header, back flanges are attached to the side walls. Generally, these flanges extend laterally from the side walls, to overlap a portion of the face of the header. These flanges can extend inwardly or outwardly from the side walls, depending on design considerations.

Openings may be provided in the back flanges to receive fasteners. These fasteners are generally nails in light-frame wood construction. Screws and bolts are also used in wood construction, depending on the size of the members to be joined and other considerations. In light-gauge steel construction, sheet metal screws, bolts and rivets are commonly used.

In perhaps the simplest hangers, the back flanges extend outwardly from the side flanges, providing an easily-accessed fastening face. Fasteners are then driven though the back flanges into the header. In other instances, design considerations dictate which particular attachment method is used for attaching the joist and the hanger to the header.

In addition, top flanges may be attached to the back flanges to aid in attaching the hanger to the header. Hangers with top flanges are generally referred to as top-flange hangers. Hangers without top flanges are generally referred to as face-mount hangers. If the top flanges wrap over the top of the header and down the back of the hanger can be called a wrap-around hanger. Again, various design considerations dictate what features are present in a hanger, and various building considerations dictate which hanger, or type of hanger, is used in a particular situation. Generally, if a top flange is used and the header is made of wood, pre-formed holes with be provided in the top flanges to receive suitable fasteners for connecting the top flange to the hanger. No such fastener openings are required in steel construction because the hanger is typically fastened to the header with self-drilling sheet metal screws or by welding.

As mentioned above, it is often desirable to fasten the joist to the hanger. This is generally done to resist uplift forces acting on the joist. Such forces are often caused by lateral loading on the building due to high winds or seismic activity. Also, one end of a joist must be downwardly restrained if that joist is cantilevered (e.g., to support an overhanging deck). As mentioned above, openings may be provided in the side walls of the hanger so that the joist can be held down with fasteners driven through the openings and into the joist.

Drywall is used in barriers, but generally cannot be used to shield supporting structural members like top plates and headers because drywall is susceptible to cracking and crushing and has little bearing strength with regard to fasteners in the drywall. The present invention allows drywall to be applied to the supporting structural members, shielding them, and provides a joist hanger connection that does not damage the drywall. Importantly, the present invention does not require any alteration of the drywall or the addition of any otherwise extraneous components. The drywall can simply be applied to the front face of the supporting member, completing covering and shielding it, and the joist hanger can then be attached by driving long screws directly through the drywall and into the supporting structural member.

The present invention uses sufficiently long, thick and stiff screws that the screws can act as cooperating cantilevers, holding the hanger away from the header and against the first drywall panel without sagging. The hanger applies a sufficiently large, flat surface to the exterior drywall sheet in order to stabilize the connection without crushing the drywall either during installation (when the screws might otherwise be overdriven) or after.

SUMMARY OF THE INVENTION

The present invention provides a connection that allows a joist hanger to be attached to a supporting structural member with drywall panels interposed between them without damaging the drywall panels or compromising the strength of the connection.

The present invention provides a connection in which a joist hanger is fastened against panels that have little or no dowel bearing strength, without damage to the panels.

The present invention provides a connection in which a joist hanger is held away from the wood supporting structural member to which it is attached.

In one embodiment, the present invention provides a joist hanger that bridges the tops of the panels interposed between it and the supporting structural member, in order to form a more secure attachment thereto.

The present invention provides a joist hanger with back plate fastener openings that are all near the tops of the back plates, in particular for connection to a double 2×4 top plate.

The present invention allows panels to be placed over a supporting structural member thereby shielding it, with the top edges of the panels in which the attachment is received, reaching at least as high as the top of the structural support member.

The present invention provides a connection in which the joist hanger is connected to the supporting structural member by cantilevered screws that are only partially embedded in the structural support member.

The present invention provides a connection in which the joist hanger is formed so that no more than one fastener attaches each back plate above the adjacent side member.

The present invention provides a joist hanger that can be fastened to a structural support member through substantially non-load-bearing panels with only two screws on each side.

DESCRIPTION OF THE DRAWINGS

FIG. **1** is an upper right perspective view of a connection formed according to the present invention in which the joist hanger has a pair of top flanges.

FIG. **2** is an exploded upper right perspective view of the connection shown in FIG. **1**.

FIG. **3** is a cross-sectional right side elevation view of the connection shown in FIG. **1**.

FIG. **4** is a front elevation view of the joist hanger shown in FIG. **1**.

FIG. **5** is a rear elevation view of the joist hanger shown in FIG. **4**.

FIG. **6** is a top plan view of the joist hanger shown in FIG. **4**.

FIG. **7** is a bottom plan view of the joist hanger shown in FIG. **4**.

FIG. **8** is a right side elevation view of the joist hanger shown in FIG. **4**.

FIG. **9** is a left side elevation view of the joist hanger shown in FIG. **4**.

FIG. **10** is a an upper right perspective view of a connection formed according to the present invention in which the joist hanger does not have a pair of top flanges.

FIG. **11** is a cross-sectional right side elevation view of the connection shown in FIG. **10**.

FIG. **12** is a front elevation view of the joist hanger shown in FIG. **10**.

FIG. **13** is a rear elevation view of the joist hanger shown in FIG. **12**.

FIG. **14** is a top plan view of the joist hanger shown in FIG. **12**.

FIG. **15** is a bottom plan view of the joist hanger shown in FIG. **12**.

FIG. **16** is a right side elevation view of the joist hanger shown in FIG. **12**.

FIG. **17** is a left side elevation view of the joist hanger shown in FIG. **12**.

FIG. **18** is a an upper right perspective view of a connection formed according to the present invention in which the joist hanger does not have a pair of top flanges and each back plate member is attached with only two fasteners.

FIG. **19** is a front elevation view of the joist hanger shown in FIG. **18**.

FIG. **20** is a rear elevation view of the joist hanger shown in FIG. **19**.

DESCRIPTION OF THE PREFERRED EMBODIMENT

As shown in FIG. **1**, the invention is a connection **1** utilizing a joist hanger **2** to hang a substantially horizontal joist **3** from a wood structural support member **4** in cooperation with a first plurality of fasteners **5** and one or more substantially vertical drywall panels **6**.

Preferably, the one or more drywall panels **6** shield the wood structural support member **4**, and each of the one or more drywall panels **6** has a front face **7**, a back face **8** opposite the front face **7**, and negligible dowel bearing strength. While not shown in the drawings to show the vertically disposed studs and top plate **4** that makes up the wall, the panels **6** cover all of the structural wood members that make up the wall.

As shown in FIGS. **2** and **3**, each fastener **5** preferably has a shank **13**. Preferably, the structural support member **4** has a substantially vertical front face **16** and significant dowel bearing strength. The joist hanger **2** preferably supports the joist **3**.

Preferably, the joist hanger **2** has a first back plate member **9**, a second back plate member **9**, a first side member **11**, and a second side member **11**.

The first back plate member **9** preferably has a first back face **10** in parallel registration with the front face **7** of a first panel **6** of the one or more panels **6**. Preferably, the second back plate member **9** also has a second back face **10** in parallel registration with the front face **7** of the first panel **6** of the one or more panels **6**. The first side member **11** preferably is connected to the first back plate member **9**. Preferably, the second side member **11** is also connected to the second back plate member **9**.

As shown in FIG. **3**, at least one of the first plurality of fasteners **5** preferably passes through the first back plate member **9** and the one or more panels **6** and into the structural support member **4**. Preferably, at least one of the first plurality of fasteners **5** also passes through the second back plate member **9** and the one or more panels **6** and into the structural support member **4**. The joist **3** preferably is supported by the joist hanger **2**. Preferably, the one or more panels **6** are between the joist hanger **2** and the structural support member **4** and the back face **8** of one panel **6** of the one or more panels **6** interfaces with the front face **16** of the structural support member **4**.

The first and second back plate members **9** preferably are planar, with first and second front faces **19** opposite the first and second back faces **10**, first and second inner edges **20** that preferably are linear, and first and second outer edges **21** opposite the first and second inner edges **20**. The first and second outer edges **21** preferably have first and second upper substantially vertical potions **22** and first and second lower slanted portions **23** that converge downward. The first and second back plate members **9** preferably have first and second top edges **24** that are oriented up and first and second bottom edges **25** that are oriented down. The first and second back plate members **9** preferably are formed with fastener openings **26** near the first and second top edges **24**. Although the back plate members **9** are shown as splayed outward in opposite direction, they could both be bent inward to face each other between the first and second side members **11**, or they could both be bent in the same direction, either left or right, with one between the first and second side members **11**. The joist hanger **2** of the present invention is preferably formed from light gauge sheet steel and is designed to be cut from the sheet metal blank with little waste. The embodiments of the invention shown in FIGS. **1-17** are preferably made from 12 gauge sheet steel, and the embodiment shown in FIGS. **18** and **19** that has only two fastener openings **26** in each back plate member is preferably made from 14 gauge steel.

The first and second side members **11** preferably are planar as well, with first and second inner faces **27** that face the joist **3**, and first and second outer faces **28** opposite the first and second inner faces **27**. The first and second side members **11** preferably have first and second back edges **29** that form an angular joint **47**, preferably orthogonal, where they meet the first and second inner edges **20** of the first and second back plate members **9**. As shown in FIGS. **8** and **9**, the first and second side members **11** preferably have first and second front edges **30** opposite the first and second back edges **29**. The first and second front edges **30** preferably have first and second lower substantially vertical portions **31** and first and second upper slanted portions **32** that angled back toward the first and second back edges **29**. The first and second side

members **11** preferably have first and second top edges **33** slightly below the level of the first and second top edges **24** of the first and second back plate members **9**. The first and second side members also preferably have first and second bottom edges **34** opposite the first and second top edges **33** and slightly above the level of the first and second bottom edges **25** of the first and second back plate members **9**. The first and second side members **11** preferably are formed with fastener openings **35**.

The one or more panels **6** preferably are drywall panels **6**. Drywall, otherwise known as plasterboard, wallboard, gypsum board, sheetrock, or gyprock, is a panel made of gypsum plaster pressed between two thick sheets of paper. It is used to make interior walls and ceilings. In the United States and Canada, drywall panels are manufactured in 48-inch wide panels in varying lengths. Common panel thicknesses are ½-inch and ⅝-inch. In the present invention, two layers of ⅝-inch drywall is preferred. Drywall is naturally fire resistant and can be used to cover and protect the structural members of a building. However, gypsum is friable and has little or no dowel bearing strength. Other panel materials and qualities are also possible.

Preferably, the joist hanger has a seat member **12** interconnecting the first and second side members **11**, and the joist **3** rests on the seat member **12** between the first and second side members **11**. Preferably, no part of the joist hanger **2** contacts the front face **16** of the structural support member **4**. The joist hanger **2** is not embedded in the structural support member **4**. The seat member **12** preferably has a substantially horizontal upper face **36** that interfaces with the joist **3**. The seat member **12** also preferably has a lower face **37** opposite the upper face **36**, first and second linear side edges **38**, a back edge **39** orthogonal to the first and second side edges **38**, and a front edge **40** parallel to the back edge **39**. The first and second side edges **38** preferably form an angular joint **48**, preferably orthogonal, where they meet the first and second bottom edges **34** of the first and second side members **11**.

Each of the one or more panels **6** preferably has a top edge face **14**. In a preferred embodiment, the joist hanger **2** has a first top flange **15** connected to the first back plate member **9** and a second top flange **15** connected to the second back plate member **9**. The first and second top flanges **15** preferably extend over the top edge faces **14** of the one or more panels **6** and are the only parts of the joist hanger that contact the structural support member **4**. Preferably, the first and second top flanges **15** are fastened to the structural support member **4**. The structural support member **4** preferably has a top face **17**, the first and second top flanges **15** are fastened to the top face **17** of the structural support member **4**. Preferably, the first and second top flanges **15** are fastened to the structural support member **4** with a second plurality of fasteners **5**. Most preferably, these fasteners **5** are nails.

The first and second top flanges **15** preferably are planar, with first and second upper faces **41** and first and second bottom faces **42** opposite the first and second upper faces **41**. Preferably, the first and second bottom faces **42** contact the top face **17** of the structural support member **4**. The first and second top flanges **15** preferably have first and second parallel side edges **43**, a first and second front edges **44** and first and second back edges **45**. The first and second front edges **44** preferably form an angular joint **49**, preferably orthogonal where they meet the first and second top edges **24** of the first and second back plate members **9**. Preferably, the first and second top flanges **15** are formed with fastener openings **46**.

As shown in FIGS. **1**, **3** and **18**, the first plurality of fasteners **5** that attach the joist hanger **2** to the structural support member **4** preferably are all within the upper one-third of the first and second back plate members **9**. Preferably, the structural support member **4** is a top plate **4** consisting of one or more parts **50** that have a height less than one-third the height of the joist hanger **2**. The parts **50** of the top plate **4** preferably are two pieces of 2×4 dimensional lumber **50**.

Preferably, each of the one or more panels **6** has a top edge face **14** and the structural support member **4** has a top face **17**. The top edge face **14** of each of the one or more panels **6** preferably is located at the level of the top face **17** of the structural support member or above the top face **17** of the structural support member **4**, thereby shielding the structural support member **4**.

Preferably, the first and second back plate members **9** have first and second top edges **24**, respectively. The first and second back faces **10** of the first and second back plate members **9** preferably interface with the front face **7** of the first panel **6** of the one or more panels **6** below the first plurality of fasteners **5** that pass through the first and second back faces **10** and the one or more panels **6** and into the structural support member **4**. Preferably, the interface between first and second back faces **10** of the first and second back plate members **9** and the front face **7** of the first panel **6** of the one or more drywall panels **6** extends at least three times as far from the first and second top edges **24** of the first and second back plates **24** as the location of any of the first plurality of fasteners **5** in the first and second back plate members **9**. This distributes pressure on the front face **7** of the first panel **6** of the one or more panels **6** so that the panels **6** are not crushed by the joist hanger **2**.

In a preferred embodiment shown in FIGS. **18**, **19** and **20**, no more than two of the first plurality of fasteners **5** fastens each of the first and second back faces **10** of the first and second back plate members **9** to the structural support member **4** through the one or more panels **6**. This arrangement achieves the highest load value per fastener **5**, and the result is unexpected.

As shown in FIG. **11**, preferably, each of the first plurality of fasteners **5** is a screw **5** that has a tip **18** embedded in the structural support member **4**. The screws **5** are cantilevered beyond the front face **16** of the structural support member **4**, through the panels **6** which do little or nothing to support the shanks **13** of the screws **5**. The most preferred fasteners **5** for the cantilevered attachment of the joist hanger **2** to the structural support member **4** are Simpson Strong-Tie SDS screws that have a 3.5-inch shank length and a ¼-inch shank diameter.

The joist hanger **2** preferably has a first back plate member **9** with a first plurality of fastener openings **26** that are all located in the upper third of the back plate member **9**. Preferably, the joist hanger **2** has second back plate member **9** with a second plurality of fastener openings **26** that are all located in the upper third of the back plate member **9**. The joist hanger **2** preferably has a first side member **11** connected to the first back plate member **9**, the first side member **11** having a first top edge **33** below the first top edge **24** of the first back plate member **9**. Preferably, the joist hanger has a second side member **11** connected to the second back plate member **9**, the second side member **11** having a second top edge **33** below the second top edge **24** of the second back plate member **9**.

At least one of the first plurality of fasteners **5** preferably passes through the first back plate member **9** and one or more panels **6** and into the structural support member **4**. As shown in FIGS. **3**, **4** and **5**, preferably, no more than one of the plurality of fasteners **5** passes through the first back plate member **9** above the first side member **11**. Similarly, at least one of the second plurality of fasteners **5** preferably passes through the second back plate member **9** and the one or more

panels **6** and into the structural support member **4**. Preferably, no more than one of the plurality of fasteners **5** passes through the second back plate member **9** above the first side member **11**. The joist **3** preferably is supported by the joist hanger **2**.

Preferably, the first and second back plate members **9** have first and second top edges **24**, respectively. The first and second back faces **10** of the first and second back plate members **9** preferably interface with the front face **7** of the first panel **6** of the one or more panels **6** below the first plurality of fasteners **5** that pass through the first and second back faces **10** and the one or more panels **6** and into the structural support member **4**. Preferably, the interface between first and second back face **10** of the first and second back plate member **9** and the front face **7** of the first panel **6** of the one or more drywall panels **6** extends at least three times as far from the first and second top edges **24** of the first and second back plates **24** as any of the first plurality of fasteners **5**.

As shown in FIGS. **4** and **5**, the first back plate member **9** preferably has a first top edge **24**, a first bottom edge **25**, a first substantially vertical inner edge **20**, a first outer edge **21** substantially parallel to the first substantially vertical inner edge **20** near the first top edge **24** and converging toward the substantially vertical inner edge **20** near the bottom edge **25**, a first back face **10** in parallel registration with the front face **7** of a first panel **6** of the one or more panels **6**, and a first plurality of fastener openings **26** between the parallel portions of the first substantially vertical inner edge **20** and the first outer edge **21**. Preferably, the second back plate member **9** also has a second top edge **24**, a second bottom edge **25**, a second substantially vertical inner edge **20**, a second outer edge **21** substantially parallel to the second substantially vertical inner edge **20** near the second top edge **24** and converging toward the substantially vertical inner edge **20** near the bottom edge **25**, a second back face **10** in parallel registration with the front face **7** of a first panel **6** of the one or more panels **6**, and a second plurality of fastener openings **26** between the parallel portions of the second substantially vertical inner edge **20** and the second outer edge **21**.

The first and second back faces **10** of the first and second back plate members **9** preferably interface with the front face **7** of the first panel **6** of the one or more panels **6** adjacent and between each of the first plurality of fasteners **5** that pass through the first and second back faces **10** and the one or more panels **6** and into the structural support member **4**.

Substantially all of the first and second back faces **10** of the first and second back plate members **9** preferably interfaces with the front face **7** of the first panel **6** of the one or more panels **6**. Preferably, the back face **8** of one panel **6** of the one or more panels **6** interfaces with the front face **16** of the first structural support member **4** where the first plurality of fasteners **5** attach the joist hanger **2** to the structural support member **4** through the one or more panels **6**.

We claim:

1. A connection (**1**) utilizing a joist hanger (**2**) to hang a generally horizontal joist (**3**) from a wood structural support member (**4**) in cooperation with a first plurality of fasteners (**5**) and one or more generally vertical drywall panels (**6**), the connection (**1**) comprising:

a. the one or more drywall panels (**6**) shielding the wood structural support member (**4**), each having a front face (**7**), a back face (**8**) opposite the front face (**7**), the one or more drywall panels (**6**) being drywall panels such that they have negligible dowel bearing strength compared to the wood structural support member (**4**);

b. the first plurality of fasteners (**5**), each of the first plurality of fasteners (**5**) having a shank (**13**);

c. the wood structural support member (**4**) having a generally vertical front face (**16**) and the wood structural support member (**4**) having significant dowel bearing strength compared to the drywall panels (**6**), the wood structural support member (**4**) supporting the shanks (**13**) of the first plurality of fasteners (**5**);

d. the joist (**3**); and

e the joist hanger (**2**) supporting the joist (**3**), the joist hanger (**2**) comprising:

i. a first back plate member (**9**) with a first back face (**10**) in parallel registration with the front face (**7**) of a first panel (**6**) of the one or more drywall panels (**6**);

ii. a second back plate member (**9**) with a second back face (**10**) in parallel registration with the front face (**7**) of the first panel (**6**) of the one or more drywall panels (**6**);

iii. a first side member (**11**) connected to the first back plate member (**9**); and

iv. a second side member (**11**) connected to the second back plate member (**9**), wherein:

(a) at least one of the first plurality of fasteners (**5**) passes through the first back plate member (**9**) and the one or more panels (**6**) and into the wood structural support member (**4**);

(b) at least one of the first plurality of fasteners (**5**) passes through the second back plate member (**9**) and the one or more drywall panels (**6**) and into the wood structural support member (**4**);

(c) the joist (**3**) is supported by the joist hanger (**2**); and

(d) the one or more drywall panels (**6**) are between the joist hanger (**2**) and the wood structural support member (**4**) and the back face (**8**) of one panel (**6**) of the one or more drywall panels (**6**) interfaces with the front face (**16**) of the wood structural support member (**4**).

2. The connection (**1**) of claim **1** wherein:

a. the joist hanger has a seat member (**12**) interconnecting the first and second side members (**11**); wherein:

i. the joist (**3**) rests on the seat member (**12**) between the first and second side members (**11**).

3. The connection (**1**) of claim **1** wherein:

a. no part of the joist hanger (**2**) contacts the front face (**16**) of the wood structural support member (**4**).

4. The connection (**1**) of claim **3** wherein:

a. each of the one or more drywall panels (**6**) has a top edge face (**14**);

b. the joist hanger (**2**) has a first top flange (**15**) connected to the first back plate member (**9**) and a second top flange (**15**) connected to the second back plate member (**9**); wherein:

i. the first and second top flanges (**15**) extend over the top edge faces (**14**) of the one or more drywall panels (**6**) and are the only parts of the joist hanger that contact the wood structural support member (**4**).

5. The connection (**1**) of claim **4** wherein:

a. the first and second top flanges (**15**) are fastened to the wood structural support member (**4**).

6. The connection (**1**) of claim **5** wherein:

a. the wood structural support member (**4**) has a top face (**17**); and

b. the first and second top flanges (**15**) are fastened to the top face (**17**) of the wood structural support member (**4**).

7. The connection (**1**) of claim **6** wherein:

a. the first and second top flanges (**15**) are fastened to the wood structural support member (**4**) with a second plurality of fasteners (**5**).

8. The connection (1) of claim 1 wherein:

a. the first plurality of fasteners (5) that attach the joist hanger (2) to the wood structural support member (4) are all within the upper one-third of the first and second back plate members (9).

9. The connection (1) of claim 8 wherein:

a. the wood structural support member (4) is a top plate (4) having one or more parts (50), and the top plate has a height less than one-third the height of the joist hanger (2).

10. The connection (1) of claim 9 wherein:

a. the parts (50) of the top plate (4) are two pieces of 2×4 dimensional lumber (50).

11. The connection (1) of claim 1 wherein:

a. each of the one or more drywall panels (6) has a top edge face (14);

b. the wood structural support member (4) has a top face (17); and

c. the top edge face (14) of each of the one or more drywall panels (6) is located at the level of the top face (17) of the wood structural support member (4) or above the top face (17) of the wood structural support member (4).

12. The connection (1) of claim 1 wherein:

a. the first and second back plate members (9) have first and second top edges (24), respectively; and

b. the first and second back faces (10) of the first and second back plate members (9) interface with the front face (7) of the first panel (6) of the one or more drywall panels (6) below the first plurality of fasteners (5) that pass through the first and second back faces (10) and the one or more drywall panels (6) and into the wood structural support member (4), wherein:

i. the interface between first and second back faces (10) of the first and second back plate members (9) and the front face (7) of the first panel (6) of the one or more drywall panels (6) extends at least three times as far from the first and second top edges (24) of the first and second back plates (24) as the location of any of the first plurality of fasteners (5) in the first and second back plate members (9).

13. The connection (1) of claim 1 wherein:

a. no more than two of the first plurality of fasteners (5) fastens each of the first and second back faces (10) of the first and second back plate members (9) to the wood structural support member (4) through the one or more drywall panels (6).

14. The connection (1) of claim 1 wherein:

a. each of the first plurality of fasteners (5) is a screw (5) that has a tip (18) embedded in the wood structural support member (4).

15. A connection (1) utilizing a joist hanger (2) to attach a joist (3) to a wood structural support member (4) in cooperation with a first plurality of fasteners (5) and one or more drywall panels (6), the connection comprising:

a. the one or more drywall panels (6), each having a front face (7) and a back face (8) the one or more drywall panels (6) being drywall panels such that they have negligible dowel bearing strength compared to the wood structural support member (4);

b. the first plurality of fasteners, each of the first plurality of fasteners (5) having a shank (13); and

c. the wood structural support member (4), the structural support member (4) having significant dowel bearing strength compared to the drywall panels (6), the wood structural support member (4) supporting the shanks (13) of the first plurality of fasteners (5);

d. the joist (3);

e the joist hanger (2), the joist hanger (2) comprising:

i. a first back plate member (9) with a first plurality of fastener openings (26) that are all located in the upper third of the back plate member (9);

ii. a second back plate member (9) with a second plurality of fastener openings (26) that are all located in the upper third of the back plate member (9);

iii. a first side member (11) connected to the first back plate member (9), the first side member (11) having a first top edge (33) below the first top edge (24) of the first back plate member (9); and

iv. a second side member (11) connected to the second back plate member (9), the second side member (11) having a second top edge (33) below the second top edge (24) of the second back plate member (9), wherein:

(a) at least one of the first plurality of fasteners (5) passes through the first back plate member (9) and one or more panels (6) and into the wood structural support member (4);

(b) no more than one of the plurality of fasteners (5) passes through the first back plate member (9) above the first side member (11);

(c) at least one of the second plurality of fasteners (5) passes through the second back plate member (9) and the one or more panels (6) and into the wood structural support member (4);

(d) no more than one of the plurality of fasteners (5) passes through the second back plate member (9) above the first side member (11); and

(e) the joist (3) is supported by the joist hanger (2).

16. The connection (1) of claim 15 wherein:

a. the joist hanger has a seat member (12) interconnecting the first and second side members (11); wherein:

i. the joist (3) rests on the seat member (12) between the first and second side members (11).

17. The connection (1) of claim 15 wherein:

a. the first and second back plate members (9) have first and second top edges (24), respectively; and

b. the first and second back faces (10) of the first and second back plate members (9) interface with the front face (7) of the first panel (6) of the one or more drywall panels (6) below the first plurality of fasteners (5) that pass through the first and second back faces (10) and the one or more drywall panels (6) and into the wood structural support member (4), wherein:

i. the interface between first and second back face (10) of the first and second back plate member (9) and the front face (7) of the first panel (6) of the one or more drywall panels (6) extends at least three times as far from the first and second top edges (24) of the first and second back plates (24) as any of the first plurality of fasteners (5).

18. The connection (1) of claim 15 wherein:

a. no more than two of the first plurality of fasteners (5) fastens each of the first and second back faces (10) of the first and second back plate members (9) to the wood structural support member (4) through the one or more drywall panels (6).

19. A connection (1) utilizing a joist hanger (2) to attach a first generally horizontal joist (3) to a first horizontal wood structural support member (4) in cooperation with a first plurality of fasteners (5) and one or more generally vertical drywall panels (6), the connection (1) comprising:

a. the one or more drywall panels (6), each having a front face (7), a back face (8) opposite the front face (7), the drywall panels (6) being drywall panels such that they

have negligible dowel bearing strength compared to the first wood structural support member (**4**);

b. the first plurality of fasteners, each of the first plurality of fasteners (**5**) having a shank (**13**);

c. the first wood structural support member (**4**) having significant dowel bearing strength compared to the drywall panels (**6**), the first wood structural support member (**4**) supporting the shanks (**13**) of the first plurality of fasteners (**5**);

d. the joist (**3**); and

e the joist hanger (**2**), the joist hanger (**2**) comprising:

i. a first back plate member (**9**) with a first back face (**10**) in parallel registration with the front face (**7**) of a first panel (**6**) of the one or more panels (**6**);

ii. a second back plate member (**9**) with a second back face (**10**) in parallel registration with the front face (**7**) of the first panel (**6**) of the one or more panels (**6**);

iii. a first side member (**11**) connected to the first back plate member (**9**); and

iv. a second side member (**11**) connected to the second back plate member (**9**), wherein:

(a) at least one of the first plurality of fasteners (**5**) passes through the first back plate member (**9**) and the one or more panels (**6**) and into the first wood structural support member (**4**);

(b) at least one of the first plurality of fasteners (**5**) passes through the second back plate member (**9**) and the one or more panels (**6**) and into the first wood structural support member (**4**);

(c) the joist (**3**) is supported by the joist hanger (**2**); and

(d) the one or more panels (**6**) are between the joist hanger (**2**) and the first wood structural support member (**4**).

20. The connection (**1**) of claim **19** wherein:

a. the first back plate member (**9**) has a first top edge (**24**), a first bottom edge (**25**), a first generally vertical inner edge (**20**), a first outer edge (**21**) substantially parallel to the first generally vertical inner edge (**20**) near the first top edge (**24**) and converging toward the generally vertical inner edge (**20** near the bottom edge (**25**), a first back face (**10**) in parallel registration with the front face (**7**) of a first panel (**6**) of the one or more drywall panels (**6**), and a first plurality of fastener openings (**26**) between the parallel portions of the first generally vertical inner edge (**20**) and the first outer edge (**21**); and

b. the second back plate member (**9**) has a second top edge (**24**), a second bottom edge (**25**), a second generally vertical inner edge (**20**), a second outer edge (**21**) generally parallel to the second generally vertical inner edge (**20**) near the second top edge (**24**) and converging toward the generally vertical inner edge (**20**) near the bottom edge (**25**), a second back face (**10**) in parallel registration with the front face (**7**) of a first panel (**6**) of the one or more drywall panels (**6**), and a second plurality of fastener openings (**26**) between the parallel portions of the second generally vertical inner edge (**20**) and the second outer edge (**21**).

21. The connection (**1**) of claim **19** wherein:

a. the joist hanger has a seat member (**12**) interconnecting the first and second side members (**11**); wherein:

i. the joist (**3**) rests on the seat member (**12**) between the first and second side members (**11**).

22. The connection (**1**) of claim **19** wherein:

a. the first and second back plate member (**9**) have first and second top edges (**24**), respectively; and

b. the first and second back faces (**10**) of the first and second back plate members (**9**) interface with the front face (**7**) of the first panel (**6**) of the one or more drywall panels (**6**) below the first plurality of fasteners (**5**) that pass through the first and second back faces (**10**) and the one or more drywall panels (**6**) and into the first wood structural support member (**4**), wherein:

i. the interface between first and second back face (**10**) of the first and second back plate member (**9**) and the front face (**7**) of the first panel (**6**) of the one or more drywall panels (**6**) extends at least three times as far from the first and second top edges (**24**) of the first and second back plates (**24**) as any of the first plurality of fasteners (**5**).

23. The connection (**1**) of claim **19** wherein:

a. no more than two of the first plurality of fasteners (**5**) fastens each of the first and second back faces (**10**) of the first and second back plate members (**9**) to the first wood structural support member (**4**) through the one or more drywall panels (**6**).

* * * * *