United States Patent

[11] **3,601,428**

[72] Inventor **Tyrell T. Gilb**
Berkeley, Calif.

[21] Appl. No. **884,170**
[22] Filed **Dec. 11, 1969**
[45] Patented **Aug. 24, 1971**
[73] Assignee **Simpson Company**

[54] **PRONGED JOIST HANGER**
3 Claims, 4 Drawing Figs.

[52] **U.S. Cl.** **287/20.94,** 52/702
[51] **Int. Cl.** **F16b 3/00**
[50] **Field of Search** ..... 287/20.92 L, 20.94, 20.95; 52/702, 289

[56] **References Cited**

FOREIGN PATENTS

683,104 3/1964 Canada ..... 287/20.92 L

OTHER REFERENCES

Popular Mechanics Magazine article " Engineered Nailing Simplifies Framing," Aug. 1964 issue, pages 137, 138, 140, 139 cited. Copy available in the Examiner' s Files, Class 287, Subclass 20.94

Primary Examiner—David J. Williamowsky
Assistant Examiner—Wayne L. Shedd
Attorney—Milmore & Cypher

ABSTRACT: A joist hanger formed with integral prongs which can be driven into a wood joist by a hammer blow thereby eliminating or reducing the number of nails required to fasten the hanger to the joist. Other integral prongs increase the holding power of the hanger to the header.

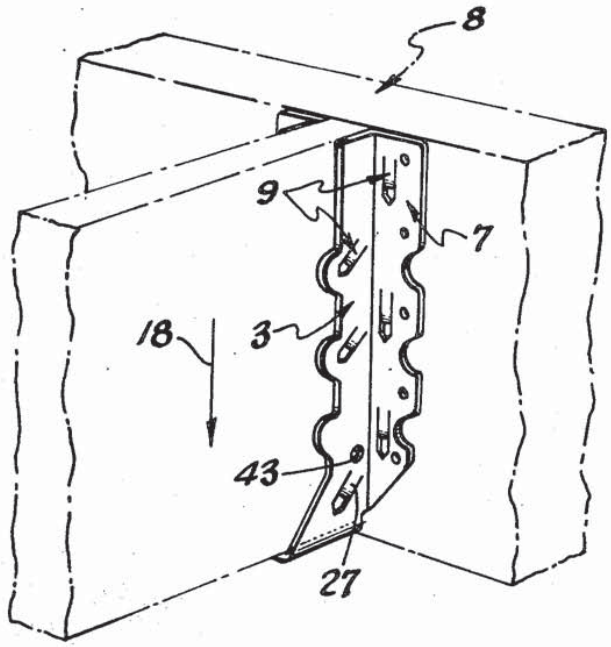

PATENTED AUG 24 1971

3,601,428

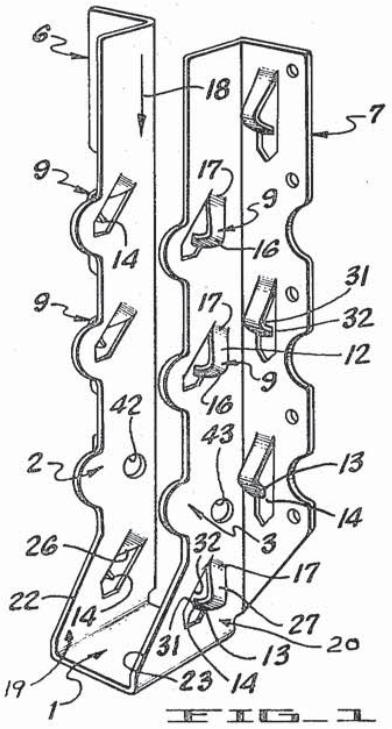

FIG. 1

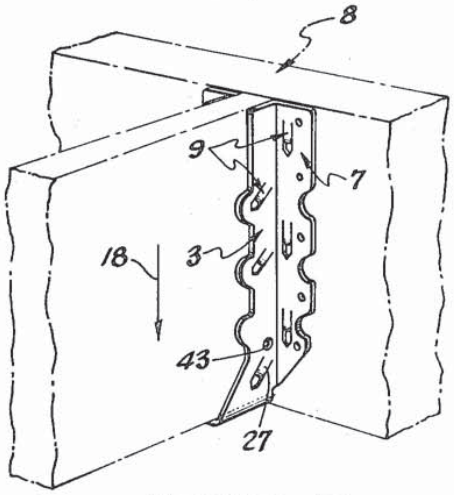

FIG. 2

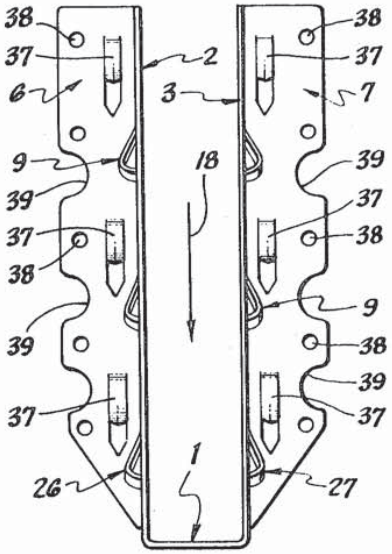

FIG. 3

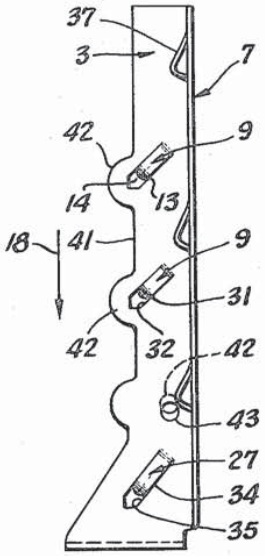

FIG. 4

TYRELL T. GILB
INVENTOR.

BY Milmoe & Cypher

ATTORNEY

PRONGED JOIST HANGER

SUMMARY OF THE INVENTION

Joist hangers have been in use for several years. These hangers were formed with openings for nails which secured the joist to the hanger. The gist of this invention is the discovery that prongs formed integrally with the hanger can secure a joist to a hanger and the hanger to a header.

An object of the invention is to provide a joist hanger which eliminates or reduces the use of nails in securing the hanger to the joist and the hanger to the header thereby effecting a savings in time and materials.

Another objective is to position the prongs so as to maximize the holding power of each prong.

Another objective is to increase the holding capacity of the hanger to the header.

Still another objective is to construct a hanger having maximum holding capacity and minimum weight.

BRIEF DESCRIPTION OF THE DRAWINGS

FIG. **1** is a perspective view of a hanger constructed in accordance with the present invention.

FIG. **2** is a perspective view of a hanger as shown in FIG. 1; the broken lines indicating a joist and a header.

FIG. **3** is a side view of a hanger shown in FIG. **1**.

FIG. **4** is a front elevation view of the hanger shown in FIG. **1**.

DESCRIPTION OF THE PREFERRED EMBODIMENTS

The joist hanger of the present invention consists briefly of a base **1**; joist sides **2** and **3** supporting the base adapted for receiving the sides of a joist **4** and connected to header sides **6** and **7** for connection to a header **8**; prong means **9** integrally formed in the joist sides and being bendable to a position wherein a portion **11** of the prongs are bendable to a position in interlocking engagement with the joist.

The basic form of the hanger is standard, being made from a single sheet of metal and is formed as shown in the drawings and as herein described. The base is formed at right angles to the joist sides and has varying widths depending upon the width of the joist to be carried. The length of the base is determined by the load to be carried. The joist sides are generally parallel and of a length equal to or less than the height of the joist. The header sides are bent at right angles to the joist sides and are preferably equal in length to the joist sides.

There is little need in most cases for securing a joist to a joist hanger since there is no live load vertically upward and the holding power of nails provides far more holding power than is required for wind or earth quake uplift design loads. Further, the greatest force on the end of a beam is shear force and nailing of the ends can decrease the ability of the beam to withstand shear stress by inducing splitting of the ends of the joist or by the inability to create uniform holding at the nailing points and the base of the hanger. The latter problem results from the possible use of smaller nails in the nail holes provided. Thus some nails would not transfer any shear load to the sides of the joist hanger, whereas others might transfer shear loads before the load is transfered to the base.

This invention eliminates the need for securing the joist to the joist hanger with nails by forming prongs integrally with the sides of the hanger. These prongs are formed by dies which create an elongated member **12** from the sides of the hanger, having a tapered portion **13** coming to a sharp point **14**. An approximately right angled bend **16** is formed at a point between one half and three fourths the distance of the prong from its root **17** so that a sharp blow of a hammer on or near the bend area will drive the free, pointed end into the outer surface of the side of the joist.

Since the prong does not penetrate as far into the joist as the nails normally used, there is less tendency of the end of the joist to split. The entire prong length is about an inch with less than half of the length penetrating the joist.

Further, since the prongs are a part of the hanger itself, uniform gripping of all of the prongs and the base of the hanger with the joist is achieved.

There is an overall savings in material since nails are eliminated between the joist and the hanger, but the primary advantage is the labor savings in securing the joist to the hanger. The carpenter can hold the joist and hanger with one hand and drive the prongs into the joist with a hammer in the other hand. Usually, one sharp blow with the hammer is all that is required to set the prong in the joist.

To give the prongs rigidity so that they will be able to withstand a hammer blow and will be driven into the joist without buckling, they are formed with a lateral curvature.

It has been found that the angle at which the prongs are formed in the hangers is extremely important. Since the load transferred from the end of the joist to the header is in almost all cases nearly vertical, it has been found that the gripping capacity of each prong is substantially increased by placing the prongs in an angular relation to the direction of the load indicated by arrow **18**. Thus instead of the force of the loading tending to bend or unbend the prong, the load is transferred to the prong at an angle and a twisting force is translated to the prong. This twisting force is transmitted to the root of the prong which is much more effective in resisting a twisting force than a bending force. Further, the slight lateral bending of the prong tends to increase the prong's ability to transmit shear and bending forces from the joist to the joist hanger. It has been found that a prong angle of 45° to the load has a holding capacity two to three times as much as a prong parallel or at 90° to the direction of load.

It is common to provide joist hangers with a base which is longer than the average width of the joist sides of the hanger. Thus side portions **19** and **20** connecting the base and joist sides form edges **22** and **23** angularly related to the base. It has been found that by positioning the prongs **26** and **27** parallel to the edges **22** and **23**, greater gripping capacity between the joist and the hanger can be obtained. It has been calculated that prongs **26** and **27** individually carry a greater proportion of the joist load than the prongs **9**. The reason for this unexpected holding capacity is not fully understood. One explanation for the fact that an angular relationship of the prongs to the load will transfer more load from the joist to the hanger is the fact that as the load comes on the joist, it moves downwardly, causing the sides of the prongs, as for example at point **31** to come in contact with the sides of the slot at point **32**. Thus force is transmitted to the side of the slot formed by creation of the prong as well as to the root of the prong. This does not explain the reason for prongs **26** and **27** taking a greater share of the load except that there may be some distortion of the side portion **19** and **20** near the base which may cause more contact between the prong side and the edge of the slot **35**.

Referring now to the side of the hanger in contact with the header, the present invention consists of a plurality of prongs **37** located on each side. Since the holding power of a prong is about one-eighth of a nail holding value parallel to the load and one-third a nail value when at a 45° angle it is necessary to continue to use nails in the header side and nail openings **38** are provided. The prongs in the header side are of the same shape as the previously described prongs and are not further described here. The header prongs are used primarily to hold the hanger in place until the nails can be driven ,although they are used for their added holding capacity. As may be seen in the drawings, the prongs in the header side and in the joist sides are interspaced so as to permit hammering a single prong without interference with another prong. Note also that the prongs on the joist sides are not directly opposite one another so that the beam is not weakened by driving the prongs at the same elevation.

In order to lighten the hanger, scallops **39** may be cut in the header sides. Similar cut outs **41** may be cut in the joist sides, leaving protrusions **42** to provide sufficient clearance between the prong slots and the edge of the material. Some codes require seven-eighths inches to three-fourths inches edge

clearance. Holes **42** and **43** are for tooling purposes and are purposely enlarged to distinguish them from nailing holes.

I claim:

1. A joist hanger for supporting a wood joist said hanger having a seat base, a pair of laterally spaced and parallel side members connected to the seat base adapted for receiving the sides of said wood joist therebetween, header engaging flanges extending laterally from each of said side members, the improvement comprising:

a. prong means consisting of an elongated portion and an angularly related penetrating portion integrally formed in said hanger side member and being bendable to a position in interlocking engagement with said joist;

b. the axis of said prongs being substantially angularly related to the direction of load placed on said hanger and substantially angularly related to a direction perpendicular to the direction of said load, and said penetrating portion of said prongs being located to cross the grain of said wood joist;

c. each of said prong means being tapered to a point at its free end and bent to approximately a right angle near said tapered end.

2. A joist hanger as described in claim **1** wherein:

a. said prongs are laterally curved to provide rigidity so that they may be hammered into the joists.

3. A joist hanger as described in claim **1** wherein:

a. at least a pair of said prongs are located at an angle of 45° to the direction of the joist load.