# DU/DHU/DHUTF

## Fire Wall Hangers

The DU/DHU face-mount and the DHUTF top-mount hangers are designed to carry joist floor loads to a wood stud wall through two layers of ⅝" gypsum board (drywall). These hangers install after the drywall is in place. The hangers come in sizes that accommodate most joists used in multi-family construction including I-joists and trusses.

All three fire wall hangers are fire-resistant F (flame) and T (temperature) rated in Intertek Design No. SST/WPCF 120-01.

**Material:** DU — 14 gauge; DHU and DHUTF — 12 gauge

**Finish:** Galvanized

**Installation:** • Use all specified fasteners; see General Notes.

- Strong-Drive® SDS Heavy-Duty Connector screws are provided with the hanger.
- Drywall is installed first.
- DU and DHU are mounted with top of hanger flush with top of wall and tight to the drywall.
- Wall top plates must be restrained to prevent rotation. Where gravity load on top of wall is less than 150 plf, use a stud plate tie connector at the back of each stud or provide equivalent restraint by another method as determined by designer.
- Stud wall top plate splices must occur at a stud location.

**Options:** • The DHU may be ordered with one flange concealed for widths at least 2½" wide; specify which flange when ordering. Use 74% of the table downloads and 100% of table uplift loads.

- The DHU/DHUTF may be ordered skewed up to 45°. Use 75% of the table downloads and 50% of table uplift loads.

**Codes:** See p. 11 for Code Reference Key Chart

### Two-Hour, Fire-Rated Wall

Simpson Strong-Tie has completed ASTM E814 standard testing at an accredited laboratory. The use of the DU/DHU/DHUTF hangers does not reduce the two-hour, fire wall assembly rating. The hangers tested provide an F (flame) and T (temperature) rating.

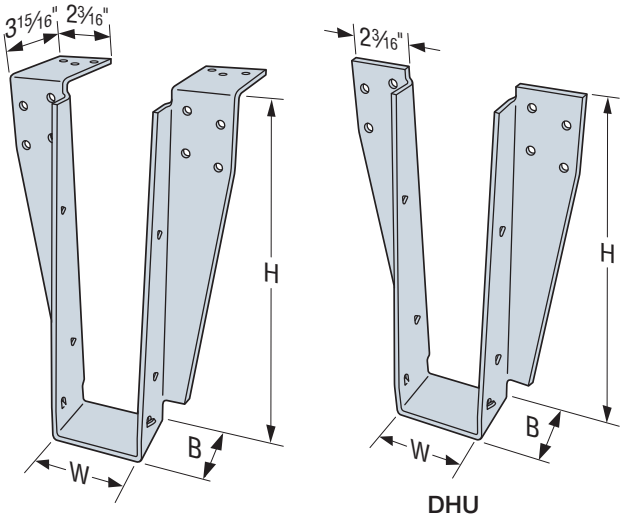


**DHUTF**
US Patent 9,394,680

**DHU**
*(DU similar)*
US Patent 9,394,680

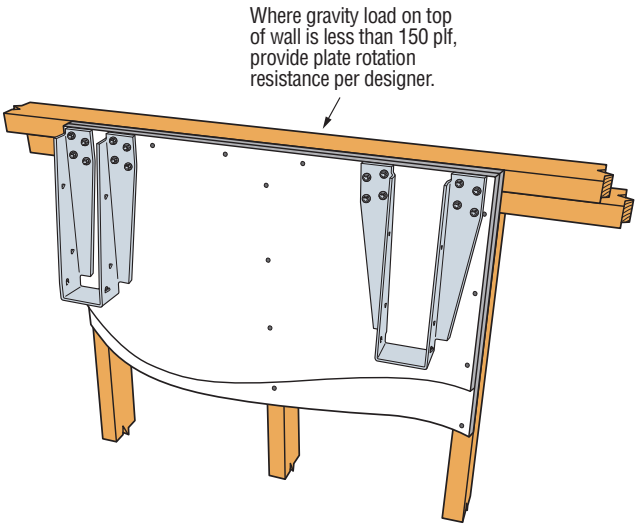


**Typical Installation Showing DHU with Concealed Flange Option (at left) and a DHU Standard Installation**

## Allowable Loads

| Model | Condition[1] | DF/SP Allowable Loads | | SPF/HF Allowable Loads | | Code Ref. |
|---|---|---|---|---|---|---|
| | | Uplift (160)[3,4] | Down (100)[2] | Uplift (160)[3] | Down (100)[2] | |
| DU | Over (2) layers ⅝" drywall | 95 | 1,110 | 170 | 880 | IBC, FL, LA |
| DHU DHUTF | Over (2) layers ⅝" drywall | 95 | 1,410 | 170 | 1,185 | |

1. Loads assume ⅝" Type X drywall attached per IBC. Wall assembly must consist at a minimum of two 2x4 plate members with studs spaced not more than 16" o.c. For alternative solutions to mounting over a single layer of drywall, refer to the technical bulletin T-C-TFWALL at **strongtie.com**.
2. Hangers spaced closer than 16" o.c. shall reduce allowable load proportionately.
3. Triangular nail holes may be filled with (4) additional 0.148" x 1½" to achieve an allowable upliftl load of 750 lb.
4. DF carried members with a minimum of 1½" x 2½" solid sawn chord dimensions may increase Allowable Uplift Load to 170 lb.
5. Allowable downloads may be increased to 1,885 lb. for DF/SP and 1,585 lb. for SPF/HF using the DHU3.56/24 or DHUTF3.56/24 models.
6. For a DHU/DHUTF two-sided (back-to-back) application on a 2x6 wall, use 1,200 lb. allowable download for DF/SP plates and use 1,005 lb. for SPF/HF plates.
7. For a DU two-sided (back-to-back) application on a 2x6 wall, use 1,075 lb. allowable download for DF/SP plates and 880 lb. for SPF/HF plates.
8. For installations of two layers of gypsum wall board over ⅝" maximum wood structural panel, the DHU/DHUTF has an allowable download of 1,975 lb. for DF/SP plates and 1,660 lb. for SPF/HF plates.
9. For the DU, if a ⅝" structural wood panel is used between the drywall and the studs, use 1,110 lb. allowable download for DF/SP plates and 880 lb. for SPF/HF plates.

## Fastener Table

| Model | Ga. | B (in.) | Fasteners (in.) | | |
|---|---|---|---|---|---|
| | | | Joist | Face | Top |
| DU | 14 | 2 | (2) 0.148 x 1½ | (4) ¼ x 3½ SDS | — |
| DHU | 12 | 2.5 | (2) 0.148 x 1½ | (8) ¼ x 3½ SDS | — |
| DHUTF | 12 | 2.5 | (2) 0.148 x 1½ | (8) ¼ x 3½ SDS | (6) 0.148 x 1½ |



C-C-2021 ©2021 SIMPSON STRONG-TIE COMPANY INC.



Columbia Insurance Company - Exhibit 2006
Simpson Strong-Tie Company Inc. v. Columbia Insurance Company PGR2023-00049
Page 1

# DU/DHU/DHUTF

## Fire Wall Hangers (cont.)

| Joist Size (in.) | Face Mount | | Top Flange | Dimensions (in.) | |
|---|---|---|---|---|---|
| | DU Models | DHU Models | DHUTF Models | W | H |
| 2x10 | DU210 | DHU210 | DHU210TF | 1 9/16 | 9 1/8 |
| 2x12 | DU212 | DHU212 | DHU212TF | 1 9/16 | 11 1/8 |
| 1 3/4 x 9 1/2 | DU1.81/9.5 | DHU1.81/9.5 | DHU1.81/9.5TF | 1 13/16 | 9 7/16 |
| 1 3/4 x 11 7/8 | DU1.81/11.88 | DHU1.81/11.88 | DHU1.81/11.88TF | 1 13/16 | 11 13/16 |
| 1 3/4 x 14 | DU1.81/14 | DHU1.81/14 | DHU1.81/14TF | 1 13/16 | 13 15/16 |
| 1 3/4 x 16 | — | DHU1.81/16 | DHU1.81/16TF | 1 13/16 | 15 15/16 |
| 2 x 9 1/2 | DU2.1/9.5 | DHU2.1/9.5 | DHU2.1/9.5TF | 2 1/8 | 9 7/16 |
| 2 x 11 7/8 | DU2.1/11.88 | DHU2.1/11.88 | DHU2.1/11.88TF | 2 1/8 | 11 13/16 |
| 2 x 14 | DU2.1/14 | DHU2.1/14 | DHU2.1/14TF | 2 1/8 | 13 15/16 |
| 2 x 16 | — | DHU2.1/16 | DHU2.1/16TF | 2 1/8 | 15 15/16 |
| 2 1/16 x 9 1/2 | DU2.1/9.5 | DHU2.1/9.5 | DHU2.1/9.5TF | 2 1/8 | 9 7/16 |
| 2 1/16 x 11 7/8 | DU2.1/11.88 | DHU2.1/11.88 | DHU2.1/11.88TF | 2 1/8 | 11 13/16 |
| 2 1/16 x 14 | DU2.1/14 | DHU2.1/14 | DHU2.1/14TF | 2 1/8 | 13 15/16 |
| 2 1/16 x 16 | DU2.1/16 | DHU2.1/16 | DHU2.1/16TF | 2 1/8 | 15 15/16 |
| 2 5/16 x 9 1/2 | DU2.37/9.5 | DHU2.37/9.5 | DHU2.37/9.5TF | 2 3/8 | 9 7/16 |
| 2 5/16 x 11 7/8 | DU2.37/11.88 | DHU2.37/11.88 | DHU2.37/11.88TF | 2 3/8 | 11 13/16 |
| 2 5/16 x 14 | DU2.37/14 | DHU2.37/14 | DHU2.37/14TF | 2 3/8 | 13 15/16 |
| 2 5/16 x 16 | DU2.37/16 | DHU2.37/16 | DHU2.37/16TF | 2 3/8 | 15 15/16 |
| 2 5/16 x 18 | — | DHU2.37/18 | DHU2.37/18TF | 2 3/8 | 17 15/16 |
| 2 1/2 x 9 1/2 | — | DHU2.56/9.5 | DHU2.56/9.5TF | 2 9/16 | 9 7/16 |
| 2 1/2 x 11 7/8 | — | DHU2.56/11.88 | DHU2.56/11.88TF | 2 9/16 | 11 13/16 |
| 2 1/2 x 14 | — | DHU2.56/14 | DHU2.56/14TF | 2 9/16 | 13 15/16 |
| 2 1/2 x 16 | — | DHU2.56/16 | DHU2.56/16TF | 2 9/16 | 15 15/16 |
| 2 1/2 x 18 | — | DHU2.56/18 | DHU2.56/18TF | 2 9/16 | 17 15/16 |
| 2 1/2 x 20 | — | DHU2.56/20 | DHU2.56/20TF | 2 9/16 | 19 15/16 |
| 3 1/2 x 9 1/2 | — | DHU3.56/9.5 | DHU3.56/9.5TF | 3 9/16 | 9 7/16 |
| 3 1/2 x 11 7/8 | — | DHU3.56/11.88 | DHU3.56/11.88TF | 3 9/16 | 11 13/16 |
| 3 1/2 x 14 | — | DHU3.56/14 | DHU3.56/14TF | 3 9/16 | 13 15/16 |
| 3 1/2 x 16 | — | DHU3.56/16 | DHU3.56/16TF | 3 9/16 | 15 15/16 |
| 3 1/2 x 18 | — | DHU3.56/18 | DHU3.56/18TF | 3 9/16 | 17 15/16 |
| 3 1/2 x 20 | — | DHU3.56/20 | DHU3.56/20TF | 3 9/16 | 19 15/16 |
| 3 1/2 x 22 | — | DHU3.56/22 | DHU3.56/22TF | 3 9/16 | 21 15/16 |
| 3 1/2 x 24 | — | DHU3.56/24 | DHU3.56/24TF | 3 9/16 | 23 15/16 |

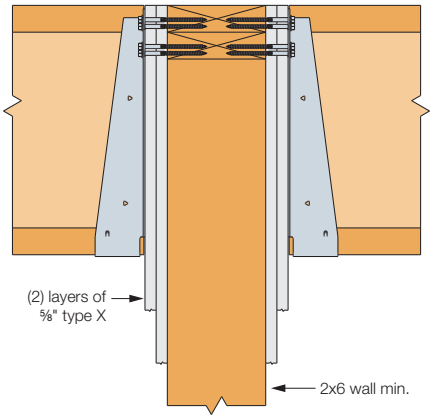


Two-Sided Installation
Over (2) Layers of Drywall

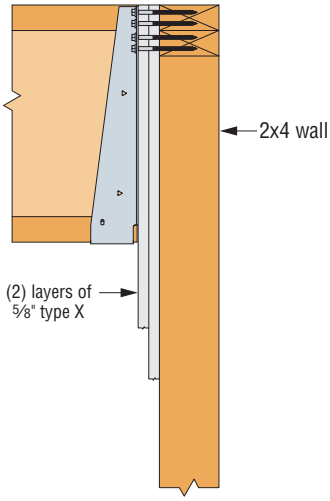


Typical Installation over
(2) Layers of Drywall

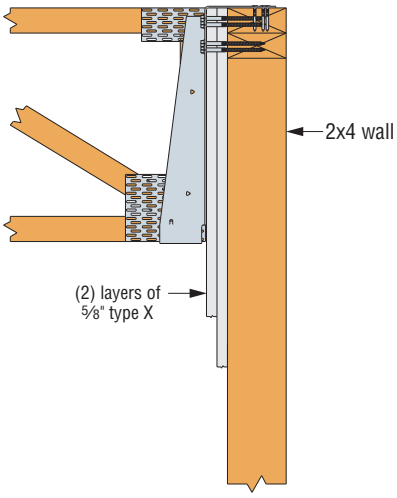


Typical Installation over
(2) Layers of Drywall



C-C-2021 ©2021 SIMPSON STRONG-TIE COMPANY INC.

Columbia Insurance Company - Exhibit 2006
Simpson Strong-Tie Company Inc. v. Columbia Insurance Company PGR2023-00049
Page 2