US011501296B2

(12) **United States Patent**
Patel

(10) **Patent No.: US 11,501,296 B2**
(45) **Date of Patent: *Nov. 15, 2022**

(54) **METHOD AND SYSTEM FOR PRESENTING REPRESENTATIONS OF PAYMENT ACCEPTING UNIT EVENTS**

(71) Applicant: **PayRange Inc.**, Portland, OR (US)

(72) Inventor: **Paresh K. Patel**, Portland, OR (US)

(73) Assignee: **PAYRANGE INC.**, Portland, OR (US)

(*) Notice: Subject to any disclaimer, the term of this patent is extended or adjusted under 35 U.S.C. 154(b) by 135 days.

This patent is subject to a terminal disclaimer.

(21) Appl. No.: **17/147,305**

(22) Filed: **Jan. 12, 2021**

(65) **Prior Publication Data**

US 2021/0279725 A1 Sep. 9, 2021

Related U.S. Application Data

(63) Continuation of application No. 15/603,400, filed on May 23, 2017, now Pat. No. 10,891,614, which is a (Continued)

(51) **Int. Cl.**
G06Q 20/40 (2012.01)
G06Q 20/32 (2012.01)
(Continued)

(52) **U.S. Cl.**
CPC ***G06Q 20/40*** (2013.01); ***G06Q 20/18*** (2013.01); ***G06Q 20/322*** (2013.01);
(Continued)

(58) **Field of Classification Search**
CPC G06Q 20/40; G06Q 20/18; G06Q 20/322; G06Q 20/3226; G06Q 20/327; G06Q 20/3278; G07F 7/0893; G07F 9/023
(Continued)

(56) **References Cited**

U.S. PATENT DOCUMENTS

5,479,602 A 12/1995 Baecker et al.
5,844,808 A 12/1998 Konsmo et al.
(Continued)

FOREIGN PATENT DOCUMENTS

CN 105139196 A 12/2015
EP 1571607 A2 9/2005
(Continued)

OTHER PUBLICATIONS

Kumar, "Amazon gets Indian patent for auto authentication of mobile transactions", ProQuest document Id: 2433007646, Financial Express, !3 August (Year: 2020).*
(Continued)

Primary Examiner — Frantzy Poinvil
(74) *Attorney, Agent, or Firm* — Morgan, Lewis & Bockius LLP

(57) **ABSTRACT**

After sending a request to a payment module, via a first communication capability (e.g., BLE), to initiate a transaction with a payment accepting unit associated with the payment module, a mobile device with one or more processors, memory, one or output devices, and two or more communication capabilities obtains a notification from the payment module via the first communication capability. The notification indicates an event at the payment accepting unit associated with the payment module. In response to obtaining the notification, mobile device provides a representation of the notification to a user of the mobile device via the one or more output devices of the mobile device. For example, a message is displayed on a display of the mobile device, a vibration alert is produced by a vibration mechanism of the mobile device, an aural alert is produced by a speaker of the mobile device, and/or the like.

28 Claims, 45 Drawing Sheets

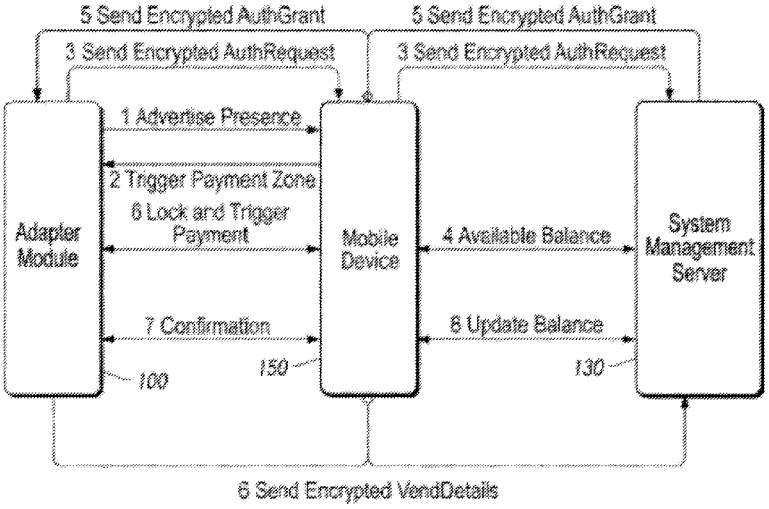

Related U.S. Application Data

continuation of application No. 14/458,199, filed on Aug. 12, 2014, now Pat. No. 9,659,296, which is a continuation-in-part of application No. 14/456,683, filed on Aug. 11, 2014, now Pat. No. 9,256,873, which is a continuation of application No. 14/335,762, filed on Jul. 18, 2014, now Pat. No. 9,547,859, which is a continuation of application No. 14/214,644, filed on Mar. 14, 2014, now Pat. No. 8,856,045, which is a continuation-in-part of application No. 29/477,025, filed on Dec. 18, 2013, now Pat. No. Des. 755,183.

(60) Provisional application No. 61/917,936, filed on Dec. 18, 2013.

(51) **Int. Cl.**
G06Q 20/18 (2012.01)
G07F 7/08 (2006.01)
G07F 9/02 (2006.01)

(52) **U.S. Cl.**
CPC ***G06Q 20/327*** (2013.01); ***G06Q 20/3226*** (2013.01); ***G06Q 20/3278*** (2013.01); ***G07F 7/0893*** (2013.01); ***G07F 9/023*** (2013.01)

(58) **Field of Classification Search**
USPC 705/3–44
See application file for complete search history.

(56) **References Cited**

U.S. PATENT DOCUMENTS

5,854,994 A * 12/1998 Canada G07C 3/00 702/56
5,880,733 A 3/1999 Horvitz et al.
5,892,900 A 4/1999 Ginter et al.
5,955,718 A 9/1999 Levasseur
6,056,194 A 5/2000 Kolls
6,390,269 B1 5/2002 Billington
6,462,644 B1 10/2002 Howell
6,505,095 B1 1/2003 Kolls
6,584,309 B1 6/2003 Whigham
6,743,095 B2 6/2004 Cole et al.
6,793,134 B2 9/2004 Clark
6,810,234 B1 10/2004 Rasanen
7,085,556 B2 8/2006 Offer
7,110,954 B2 9/2006 Yung et al.
7,127,236 B2 10/2006 Khan
7,131,575 B1 11/2006 Kolls
7,455,223 B1 11/2008 Wilson
7,458,510 B1 12/2008 Zhou
7,464,867 B1 12/2008 Kolls
7,672,680 B1 3/2010 Lee et al.
7,690,495 B1 4/2010 Kolls
7,721,958 B2 5/2010 Belfer et al.
7,848,980 B2 12/2010 Carlson
7,962,369 B2 6/2011 Rosenberg
7,983,670 B1 7/2011 Elliott
8,020,763 B1 9/2011 Kowalchyk
8,059,101 B2 11/2011 Westerman
D669,899 S 10/2012 Cheng et al.
8,346,670 B2 1/2013 Hasson et al.
8,356,754 B2 1/2013 Johnson et al.
8,376,227 B2 2/2013 Hammad et al.
8,396,589 B2 3/2013 Katzenstein Garibaldi
8,412,626 B2 4/2013 Hirson et al.
8,438,066 B1 5/2013 Yuen
8,479,190 B2 7/2013 Sueyoshi et al.
8,489,140 B2 7/2013 Weiner et al.
8,517,766 B2 8/2013 Golko et al.
8,548,426 B2 10/2013 Smith
8,577,734 B2 11/2013 Treyz
8,583,496 B2 11/2013 You et al.
8,596,528 B2 12/2013 Fernandes et al.
8,596,529 B1 12/2013 Kolls
8,600,899 B1 12/2013 Davis
8,606,702 B2 12/2013 Ruckart
8,615,445 B2 12/2013 Dorsey et al.
8,645,971 B2 2/2014 Carlson et al.
8,700,530 B2 4/2014 Smith
8,707,276 B2 4/2014 Hill et al.
8,712,893 B1 4/2014 Brandmaier
8,761,809 B2 6/2014 Faith et al.
8,769,643 B1 7/2014 Ben Ayed
8,788,341 B1 7/2014 Patel
8,794,734 B2 8/2014 Drummond
8,810,430 B2 8/2014 Proud
8,819,659 B2 8/2014 Ramer et al.
8,838,481 B2 9/2014 Moshfeghi
8,850,421 B2 9/2014 Proud
8,856,045 B1 10/2014 Patel et al.
8,881,975 B1 11/2014 Matthews
8,898,620 B2 11/2014 Eizenman et al.
8,903,737 B2 12/2014 Cameron et al.
9,001,047 B2 4/2015 Forstall
9,037,492 B2 5/2015 White
9,092,768 B2 7/2015 Breitenbach et al.
9,210,247 B2 12/2015 Vance et al.
9,262,771 B1 2/2016 Patel
9,272,713 B1 * 3/2016 Dvoskin B60K 28/02
9,395,888 B2 7/2016 Shiplacoff et al.
9,424,603 B2 8/2016 Hammad et al.
9,483,763 B2 11/2016 Van Os
9,547,859 B2 1/2017 Patel
9,875,473 B2 1/2018 Patel
9,898,884 B1 2/2018 Arora et al.
10,163,292 B1 12/2018 Romero
10,210,501 B2 2/2019 Low et al.
10,217,151 B1 2/2019 Greiner et al.
10,304,057 B1 5/2019 Powell
10,380,573 B2 8/2019 Lin et al.
10,423,949 B2 9/2019 Lyons et al.
10,824,828 B2 11/2020 Ostri
10,977,642 B2 4/2021 Khan
11,074,577 B1 7/2021 Soccorsy et al.
11,182,794 B1 * 11/2021 Aument G06Q 20/3278
11,227,275 B2 1/2022 Van Heerden et al.
11,373,147 B1 * 6/2022 Moore G06Q 10/20
2002/0016740 A1 2/2002 Ogasawara
2002/0164953 A1 11/2002 Curtis
2003/0089767 A1 5/2003 Kiyomatsu
2003/0110097 A1 6/2003 Lei
2003/0130902 A1 7/2003 Athwal
2003/0158891 A1 8/2003 Lei et al.
2003/0191811 A1 10/2003 Hashem
2003/0206542 A1 11/2003 Holder
2003/0236872 A1 12/2003 Atkinson
2004/0049454 A1 3/2004 Kanno et al.
2004/0117262 A1 6/2004 Berger et al.
2004/0122685 A1 6/2004 Bunce et al.
2004/0133653 A1 7/2004 Defosse
2005/0043011 A1 2/2005 Murray
2005/0080510 A1 4/2005 Bates
2005/0101295 A1 5/2005 Rupp
2005/0177798 A1 8/2005 Thomson et al.
2005/0181804 A1 8/2005 Misikangas et al.
2005/0232421 A1 10/2005 Simons et al.
2005/0234776 A1 10/2005 Jacoves
2006/0052157 A1 3/2006 Walker et al.
2006/0123335 A1 6/2006 Sanchez et al.
2007/0050083 A1 3/2007 Signorelli et al.
2007/0159994 A1 * 7/2007 Brown H04W 12/02 370/324
2007/0186105 A1 8/2007 Bailey
2007/0187491 A1 8/2007 Godwin et al.
2007/0227856 A1 10/2007 Gopel
2007/0255653 A1 11/2007 Tumminaro
2008/0010193 A1 1/2008 Rackley, III et al.
2008/0033880 A1 2/2008 Fiebiger et al.
2008/0040265 A1 2/2008 Rackley
2008/0126213 A1 5/2008 Robertson et al.
2008/0141033 A1 6/2008 Ginter et al.

(56) **References Cited**

U.S. PATENT DOCUMENTS

2008/0154727 A1 6/2008 Carlson
2008/0154735 A1 6/2008 Carlson
2008/0163257 A1 7/2008 Carlson et al.
2008/0167017 A1 7/2008 Wentker et al.
2008/0167991 A1 7/2008 Carlson et al.
2008/0183480 A1 7/2008 Carlson et al.
2008/0201226 A1 8/2008 Carlson et al.
2008/0208762 A1 8/2008 Arthur et al.
2008/0249658 A1 10/2008 Walker
2008/0254853 A1 10/2008 Wright et al.
2008/0255947 A1 10/2008 Friedman
2008/0319913 A1 12/2008 Wiechers
2009/0037284 A1 2/2009 Lewis et al.
2009/0076896 A1 3/2009 Dewitt
2009/0099961 A1 4/2009 Ogilvy
2009/0106160 A1 4/2009 Skowronek
2009/0119190 A1 5/2009 Realini
2009/0171682 A1 7/2009 Dixon et al.
2009/0306818 A1 12/2009 Slagley et al.
2009/0306819 A1 12/2009 Insolia
2009/0313132 A1 12/2009 Kenna et al.
2009/0327089 A1 12/2009 Kanno et al.
2010/0061294 A1 3/2010 Proctor, Jr.
2010/0094456 A1 4/2010 Simpkins et al.
2010/0198400 A1 8/2010 Pascal
2010/0276484 A1 11/2010 Banerjee
2010/0280956 A1 11/2010 Chutorash
2010/0312692 A1 12/2010 Teicher
2010/0320266 A1 12/2010 White
2010/0329285 A1 12/2010 Stanton
2011/0029405 A1 2/2011 Cronin
2011/0040686 A1 2/2011 Carlson
2011/0125561 A1 5/2011 Marcus
2011/0153436 A1 6/2011 Krampe
2011/0153442 A1 6/2011 Krampe
2011/0172848 A1 7/2011 Breitenbach et al.
2011/0178883 A1 7/2011 Granbery
2011/0225067 A1 9/2011 Dunwoody
2011/0238476 A1 9/2011 Carr
2011/0244799 A1 10/2011 Roberts et al.
2011/0251892 A1 10/2011 Laracey
2011/0251910 A1 10/2011 Dimmick
2011/0276636 A1 11/2011 Cheng et al.
2011/0289023 A1 11/2011 Forster et al.
2012/0011024 A1 1/2012 Dorsey et al.
2012/0016731 A1 1/2012 Smith et al.
2012/0029691 A1 2/2012 Mockus et al.
2012/0030047 A1 2/2012 Fuentes
2012/0036045 A1 2/2012 Lowe et al.
2012/0066096 A1 3/2012 Penide
2012/0078735 A1 3/2012 Bauer et al.
2012/0108173 A1 5/2012 Hahm et al.
2012/0136478 A1 5/2012 Anand
2012/0150742 A1 6/2012 Poon et al.
2012/0158172 A1 6/2012 Wencslao
2012/0160912 A1 6/2012 Laracey
2012/0197740 A1 8/2012 Grigg et al.
2012/0203666 A1 8/2012 Torossian et al.
2012/0231844 A1 9/2012 Coppinger
2012/0246074 A1 9/2012 Annamalai et al.
2012/0253852 A1 10/2012 Pourfallah
2012/0254631 A1 10/2012 Skillman et al.
2012/0255653 A1 10/2012 Chin
2012/0258773 A1 10/2012 Alvarez Rivera
2012/0276845 A1 11/2012 Wikander
2012/0290472 A1 11/2012 Mullen et al.
2012/0296826 A1 11/2012 Bergdale et al.
2012/0303528 A1 11/2012 Weiner et al.
2012/0316963 A1 12/2012 Moshfeghi
2012/0330844 A1 12/2012 Kaufman
2013/0030931 A1 1/2013 Moshfeghi
2013/0054016 A1 2/2013 Canter et al.
2013/0054336 A1 2/2013 Graylin
2013/0054395 A1 2/2013 Cyr et al.
2013/0067365 A1 3/2013 Shrufi et al.
2013/0085835 A1 4/2013 Horowitz
2013/0087050 A1* 4/2013 Studor A47J 31/525 99/279
2013/0100886 A1 4/2013 Cherian
2013/0110296 A1 5/2013 Khoo
2013/0117490 A1 5/2013 Harriman
2013/0117738 A1 5/2013 Livingston et al.
2013/0124289 A1 5/2013 Fisher
2013/0126607 A1 5/2013 Behjat
2013/0143498 A1 6/2013 Niemi
2013/0166448 A1 6/2013 Narayanan
2013/0185150 A1 7/2013 Crum
2013/0191789 A1 7/2013 Calman
2013/0217333 A1 8/2013 Sprigg et al.
2013/0246171 A1 9/2013 Carapelli
2013/0246364 A1 9/2013 Bhavith
2013/0267121 A1 10/2013 Hsu
2013/0267176 A1 10/2013 Hertel et al.
2013/0275303 A1 10/2013 Fiore
2013/0275305 A1 10/2013 Duplan
2013/0278622 A1 10/2013 Sun et al.
2013/0282590 A1 10/2013 Rajarethnam et al.
2013/0297422 A1 11/2013 Hunter et al.
2013/0311379 A1 11/2013 Smith
2013/0311382 A1 11/2013 Fosmark et al.
2013/0331985 A1 12/2013 Felique
2013/0332293 A1 12/2013 Ran
2013/0346305 A1 12/2013 Mendes
2014/0006451 A1* 1/2014 Mullis G06Q 20/18 707/784
2014/0019367 A1 1/2014 Khan et al.
2014/0025958 A1 1/2014 Calman
2014/0032413 A1 1/2014 Low
2014/0040028 A1 2/2014 King et al.
2014/0040117 A1 2/2014 Jain
2014/0052524 A1 2/2014 Andersen
2014/0064116 A1 3/2014 Linde et al.
2014/0067542 A1 3/2014 Everingham
2014/0074714 A1 3/2014 Melone et al.
2014/0074723 A1 3/2014 Kamat
2014/0085046 A1 3/2014 Shin et al.
2014/0085109 A1 3/2014 Stefik
2014/0089016 A1 3/2014 Smullin
2014/0100977 A1 4/2014 Davis
2014/0122298 A1 5/2014 Oyer
2014/0136301 A1 5/2014 Valdes
2014/0136411 A1 5/2014 Cho
2014/0143055 A1 5/2014 Johnson
2014/0143074 A1 5/2014 Kolls
2014/0172179 A1 6/2014 Baudin
2014/0180852 A1 6/2014 Kamat
2014/0108108 A1 7/2014 Artman
2014/0188708 A1 7/2014 Govindarajan et al.
2014/0201066 A1 7/2014 Roux et al.
2014/0249995 A1 9/2014 Ogilvy
2014/0278989 A1 9/2014 Calman
2014/0279008 A1 9/2014 Calman
2014/0279101 A1 9/2014 Duplan et al.
2014/0279556 A1 9/2014 Priebatsch
2014/0289047 A1 9/2014 Yee
2014/0317611 A1 10/2014 Wojcik et al.
2014/0324627 A1 10/2014 Haver
2014/0337235 A1 11/2014 Van Heerden et al.
2014/0351099 A1 11/2014 Zhu
2014/0361872 A1 12/2014 Garcia et al.
2014/0378057 A1 12/2014 Ramon et al.
2015/0006421 A1 1/2015 Pearson
2015/0051977 A1 2/2015 Lyman
2015/0073980 A1 3/2015 Griffin et al.
2015/0081462 A1 3/2015 Ozvat et al.
2015/0088698 A1 3/2015 Ackerman
2015/0100152 A1 4/2015 Trevino et al.
2015/0105901 A1 4/2015 Joshi et al.
2015/0120546 A1 4/2015 Fernandes
2015/0120555 A1 4/2015 Jung
2015/0149992 A1 5/2015 Wade et al.
2015/0154579 A1 6/2015 Teicher
2015/0169312 A1 6/2015 Patel
2015/0170131 A1 6/2015 Patel

(56) **References Cited**

U.S. PATENT DOCUMENTS

2015/0170132	A1	6/2015	Patel	
2015/0170136	A1	6/2015	Patel	
2015/0178702	A1	6/2015	Patel	
2015/0220381	A1	8/2015	Horagan et al.	
2015/0235202	A1	8/2015	Zabala	
2015/0278811	A1	10/2015	Lalchandani	
2015/0287085	A1	10/2015	Windmueller	
2015/0302377	A1	10/2015	Sweitzer	
2015/0317720	A1	11/2015	Ramaratnam	
2015/0332029	A1	11/2015	Coxe	
2015/0346994	A1	12/2015	Chanyontpatanakul	
2015/0373537	A1	12/2015	Toksvig	
2016/0019604	A1	1/2016	Kobayashi	
2016/0063476	A1	3/2016	Baldie	
2016/0086145	A1	3/2016	Tsutsui	
2016/0092859	A1	3/2016	Klingen	
2016/0098690	A1*	4/2016	Silva	H04W 4/80 705/21
2016/0132870	A1	5/2016	Xu et al.	
2016/0196220	A1	7/2016	Perez et al.	
2016/0232515	A1	8/2016	Jhas	
2016/0292469	A1	10/2016	Ianni	
2016/0335620	A1	11/2016	Lyons et al.	
2017/0006656	A1	1/2017	Nacer et al.	
2017/0193508	A1	1/2017	Patel et al.	
2017/0193478	A1	7/2017	Dhurka	
2017/0330164	A1	11/2017	Suelberg et al.	
2018/0005220	A1	1/2018	Laracey	
2018/0197167	A1	7/2018	Ganesan et al.	
2018/0240096	A1	8/2018	Patel	
2018/0276674	A1	9/2018	Ramatchandirane et al.	
2018/0315271	A1*	11/2018	Gharabegian	F03G 6/001
2018/0374076	A1	12/2018	Wheeler et al.	
2019/0236586	A1	8/2019	Mei et al.	
2019/0244205	A1	8/2019	Fieglein	
2019/0244465	A1*	8/2019	Saunders	G06Q 20/18
2020/0387881	A1*	12/2020	Smith	G07C 9/37

FOREIGN PATENT DOCUMENTS

EP	2061001	A1	5/2009
JP	2002-183812	A	6/2002
JP	2003-242401	A	8/2003
JP	2003-323662	A	11/2003
JP	2004-252640	A	9/2004
JP	2005-526325	T	9/2005
JP	2009-259226	A	11/2009
JP	2012-504273	T	2/2012
WO	WO 2003/098561		11/2003
WO	WO 2007/015610	A1	2/2007
WO	WO 2008/083022	A1	7/2008
WO	WO 2008/083025	A2	7/2008
WO	WO 2008/083078	A2	7/2008
WO	WO 2008/083089	A1	7/2008
WO	WO 2008/083105	A2	7/2008
WO	WO 2008/083115	A1	7/2008
WO	WO 2008/083119	A1	7/2008
WO	WO 2009/070430	A2	6/2009
WO	WO 2013/132995	A1	9/2013
WO	WO 2013/177416	A2	11/2013
WO	WO 2014/093857	A1	6/2014
WO	WO 2016/123545	A1	8/2016
WO	WO 2017/010936	A1	1/2017
WO	WO 2017/143079	A1	8/2017

OTHER PUBLICATIONS

@RobocopyEs, posted Oct. 11, 2014, retrieved Feb. 13, 2018, <URL:https://twitter.com/robocopyes> 2 pgs.
Adams, How can stationary kiosks thrive in a mobile world?, American Banker, 2012.
Balan et al., mFerio: the design and evaluation of a peer-to-peer mobile payment system, Jun. 2009, 14 pgs.
Balfe et al., e-EMV: emulating EMV for internet payments with trusted computing Technologies, Oct. 2008, 12 pgs.
Bing, Bing Images Search: "dongle", http://www.bing.com/images/search?q=dongle&FORM+HDRSC2, Dec. 5, 2013, 8 pgs.
Carlson, Specification, U.S. Appl. No. 60/871,898, Dec. 26, 2006, 169 pgs.
Frolick, Assessing M-Commerce Opportunities, Auerbach Publications Inc., Information Systems Management, Spring 2004.
Google, Chromecast, htttp://www.google.com/intl/devices/chromecast/, Dec. 12, 2013, 4 pgs.
How to Pay the New Way, youtube, Apr. 5, 2018, 4 pgs.
How will Apple's new mobile wallet Passbook impact other mobile wallets?, posted Jun. 13, 2012, retrieved Feb. 13, 2018 from <URL:https://www.quora.com/How-will-Apples-new-mobile-wallet-Passbook-impact-other-mobile-wallets>, 5 pgs.
Kadambi et al., Near-Field Communication-based Secure Mobile Payment Service, Aug. 2009, 10 pgs.
Madlmayr et al., Near Field Communication Based Mobile Payment System, Austrian Research Funding Agency, Project 811408, Mar. 6, 2008, 13 pgs.
Novotny, Applying RFID technology in the retail industry—benefits and concerns from the consumer's perspective, Institute of Economic Science, Eszterhazy Karoly College, Eger, Hungary, Retail Technologies for the 21 Century, innovation and competitiveness in the retail industry, 2015.
Nurel, Recent Developments in Wireless Network Systems, Izmir Institute of Technology, Sep. 2001, 280 pgs.
Patel, Final Office Action, U.S. Appl. No. 14/320,534, dated Mar. 2, 2018, 26 pgs.
Patel, Final Office Action, U.S. Appl. No. 14/320,534, dated Apr. 16, 2015, 21 pgs.
Patel, Final Office Action, U.S. Appl. No. 14/320,534, dated Nov. 30, 2016, 24 pgs.
Patel, Final Office Action, U.S. Appl. No. 14/321,717, dated Jun. 18, 2015, 22 pgs.
Patel, Final Office Action, U.S. Appl. No. 14/321,724, dated Oct. 8, 2015, 19 pgs.
Patel, Final Office Action, U.S. Appl. No. 14/321,724, dated Dec. 13, 2017, 22 pgs.
Patel, Final Office Action, U.S. Appl. No. 14/321,733, dated Nov. 14, 2014, 11 pgs.
Patel, Final Office Action, U.S. Appl. No. 14/335,762, dated Jun. 9, 2016, 15 pgs.
Patel, Final Office Action, U.S. Appl. No. 14/456,683, dated Jun. 8, 2015, 14 pgs.
Patel, Final Office Action, U.S. Appl. No. 14/458,192, dated Sep. 16, 2015, 26 pgs.
Patel, Final Office Action, U.S. Appl. No. 14/458,199, dated Jun. 24, 2015, 8 pgs.
Patel, Final Office Action, U.S. Appl. No. 14/641,236, dated Mar. 11, 2016, 16 pgs.
Patel, Final Office Action, U.S. Appl. No. 14/968,703, dated Feb. 12, 2019, 22 pgs.
Patel, Final Office Action, U.S. Appl. No. 15/435,228, dated Oct. 2, 2020, 24 pgs.
Patel, Final Office Action, U.S. Appl. No. 15/893,514, dated Jul. 22, 2021, 12 pgs.
Patel, Final Office Action, U.S. Appl. No. 15/956,741, dated Oct. 2, 2020, 12 pgs.
Patel, Notice of Allowance, U.S. Appl. No. 14/214,644, dated Jun. 10, 2014, 9 pgs.
Patel, Notice of Allowance, U.S. Appl. No. 14/321,733, dated Jun. 22, 2015, 8 pgs.
Patel, Notice of Allowance, U.S. Appl. No. 14/321,733, dated Feb. 27, 2015, 9 pgs.
Patel, Notice of Allowance, U.S. Appl. No. 14/335,762, dated Oct. 3, 2016, 7 pgs.
Patel, Notice of Allowance, U.S. Appl. No. 14/335,762, dated Mar. 30, 2015, 9 pgs.
Patel, Notice of Allowance, U.S. Appl. No. 14/456,683, dated Oct. 8, 2015, 15 pgs.
Patel, Notice of Allowance, U.S. Appl. No. 14/458,192, dated Oct. 12, 2017, 8 pgs.

(56) **References Cited**

OTHER PUBLICATIONS

Patel, Notice of Allowance, U.S. Appl. No. 14/458,199, dated Jan. 20, 2017, 9 pgs.
Patel, Notice of Allowance, U.S. Appl. No. 14/611,065, dated Mar. 26, 2018, 18 pgs.
Patel, Notice of Allowance, U.S. Appl. No. 14/614,336, dated Dec. 11, 2015, 8 pgs.
Patel, Notice of Allowance, U.S. Appl. No. 14/614,336, dated Nov. 25, 2015, 13 pgs.
Patel, Notice of Allowance, U.S. Appl. No. 14/968,703, dated Jun. 27, 2019, 10 pgs.
Patel, Notice of Allowance, U.S. Appl. No. 15/406,492, dated Mar. 11, 2020, 9 pgs.
Patel, Notice of Allowance, U.S. Appl. No. 15/435,228, dated Aug. 12, 2021, 9 pgs.
Patel, Notice of Allowance, U.S. Appl. No. 15/603,400, dated Dec. 18, 2019, 8 pgs.
Patel, Notice of Allowance, U.S. Appl. No. 15/603,400, dated Jun. 18, 2020, 5 pgs.
Patel, Notice of Allowance, U.S. Appl. No. 15/878,352, dated Oct. 23, 2020, 8 pgs.
Patel, Notice of Allowance, U.S. Appl. No. 16/029,483, dated Dec. 23, 2020, 21 pgs.
Patel, Notice of Allowance, U.S. Appl. No. 16/748,727, dated May 9, 2022, 16 pgs.
Patel, Notice of Allowance, U.S. Appl. No. 16/748,727, dated Jan. 20, 2022, 15 pgs.
Patel, Notice of Alowance, U.S. Appl. No. 16/750,477, dated Jan. 26, 2022, 14 pgs.
Patel, Notice of Allowance, U.S. Appl. No. 16/934,933, dated Mar. 31, 2021, 8 pgs.
Patel, Office Action, U.S. Appl. No. 14/320,534, dated Apr. 8, 2016, 21 pgs.
Patel, Office Action, U.S. Appl. No. 14/320,534, dated Oct. 29, 2014, 18 pgs.
Patel, Office Action, U.S. Appl. No. 14/321,717, dated Dec. 19, 2014, 16 pgs.
Patel, Office Action, U.S. Appl. No. 14/321,724, dated Mar. 13, 2017, 21 pgs.
Patel, Office Action, U.S. Appl. No. 14/321,724, dated May 15, 2015, 19 pgs.
Patel, Office Action, U.S. Appl. No. 14/321,733, dated Aug. 21, 2014, 9 pgs.
Patel, Office Action, U.S. Appl. No. 14/335,762, dated Dec. 10, 2014, 7 pgs.
Patel, Office Action, U.S. Appl. No. 14/335,762, dated Sep. 18, 2015, 13 pgs.
Patel, Office Action, U.S. Appl. No. 14/456,683, dated Jan. 2, 2015, 10 pgs.
Patel, Office Action, U.S. Appl. No. 14/458,192, dated Mar. 23, 2017, 26 pgs.
Patel, Office Action, U.S. Appl. No. 14/458,192, dated Jan. 30, 2015, 24 pgs.
Patel, Office Action, U.S. Appl. No. 14/458,199, dated Jan. 5, 2015, 7 pgs.
Patel, Office Action, U.S. Appl. No. 14/458,199, dated Mar. 28, 2016, 8 pgs.
Patel, Office Action, U.S. Appl. No. 14/611,065, dated Oct. 3, 2016, 19 pgs.
Patel, Office Action, U.S. Appl. No. 14/611,065, dated Jun. 13, 2017, 17 pgs.
Patel, Office Action, U.S. Appl. No. 14/614,336, dated May 27, 2015, 17 pgs.
Patel, Office Action, U.S. Appl. No. 14/641,236, dated Feb. 7, 2018, 19 pgs.
Patel, Office Action, U.S. Appl. No. 14/641,236, dated May 29, 2015, 10 pgs.
Patel, Office Action, U.S. Appl. No. 14/958,703, dated Aug. 7, 2018, 31 pgs.
Patel, Office Action, U.S. Appl. No. 15/406,492, dated Jul. 25, 2019, 16 pgs.
Patel, Office Action, U.S. Appl. No. 15/435,228, dated Mar. 26, 2021, 21 pgs.
Patel, Office Action, U.S. Appl. No. 15/603,400, dated Jun. 12, 2019, 10 pgs.
Patel, Office Action, U.S. Appl. No. 15/878,352, dated Jan. 24, 2020, 12 pgs.
Patel, Office Action, U.S. Appl. No. 15/893,514, dated Oct. 29, 2020, 17 pgs.
Patel, Office Action, U.S. Appl. No. 15/956,741, dated Apr. 22, 2020, 10 pgs.
Patel, Office Action, U.S. Appl. No. 15/956,741, dated Dec. 27, 2021, 10 pgs.
Patel, Office Action, U.S. Appl. No. 16/029,483, dated Apr. 27, 2020, 28 pgs.
Patel, Office Action, U.S. Appl. No. 16/681,673, dated Dec. 24, 2021, 20 pgs.
Patel, Office Action, U.S. Appl. No. 16/934,933, dated Oct. 28, 2020, 9 pgs.
Patel, Office Action, U.S. Appl. No. 17/216,399, dated Apr. 8, 2022, 14 pgs.
PayRange Inc., Communication Pursuant to Article 94(3), EP 14828617.2, dated Dec. 19, 2017, 6 pgs.
PayRange Inc., Communication Pursuant to Article 94(3), EP 16706931.9, dated Jun. 29, 2018, 8 pgs.
PayRange Inc., Communication Pursuant to Rules 161(1) and 162, EP 14828617.2, dated Sep. 21, 2016, 2 pgs.
PayRange Inc., Communication Pursuant to Rules 161(1) and 162, EP 16706931.9, dated Sep. 21, 2017, 2 pgs.
PayRange Inc., Communication under Rule 71(3) EPC, EP 14828617.2, dated Nov. 19, 2020, 8 pgs.
PayRange Inc., Communication under Rule 71(3) EPC, EP 17708929.9, dated Jun. 12, 2020, 5 pgs.
PayRange Inc., European Search Report, EP 20203134.1, dated Feb. 9, 2021, 2 pgs.
PayRange Inc., European Search Report, EP 21165692.1, dated Sep. 14, 2021, 9 pgs.
PayRange Inc., IPRP, PCT/US2014/071284, dated Jun. 21, 2016, 6 pgs.
PayRange Inc., IPRP, PCT/US2016/015763, dated Aug. 1, 2017, 7 pgs.
PayRange Inc., IPRP, PCT/US2017/015676, dated Jul. 31, 2018, 9 pgs.
PayRange Inc., IPRP, PCT/US2017/018194, dated Aug. 21, 2018, 17 pgs.
PayRange Inc., IPRP, PCT/US2019/060777, dated May 11, 2021, 7 pgs.
PayRange Inc., ISR/WO, PCT/US2014/071284, dated Mar. 25, 2015, 9 pgs.
PayRange Inc., ISR/WO, PCT/US2016/015763, dated Apr. 8, 2016, 9 pgs.
PayRange Inc., ISR/WO, PCT/US2017/015676, dated Apr. 18, 2017, 11 pgs.
PayRange Inc., ISR/WO, PCT/US2017/018194, dated Apr. 12, 2017, 10 pgs.
PayRange Inc., ISR/WO, PCT/US2019/060777, dated Feb. 6, 2020, 11 pgs.
PayRange Inc., ISR/WO, PCT/US2021/042632, dated Nov. 17, 2021, 11 pgs.
PayRange Inc., Notice of Reasons for Rejection, JP 2017-527886, dated Aug. 29, 2019, 10 pgs.
PayRange Inc., Notice of Reasons for Rejection, JP 2018-543707, dated Sep. 4, 2020, 4 pgs.
PayRange Inc., Notice of Reasons for Rejection, JP 2020-101558, dated Oct. 7, 2021, 2 pgs.
PayRange Inc., Summons to Attend Oral Proceedings, EP 14828617.2, Apr. 2, 2020, 12 pgs.
PayRange New Product Launch, posted at youtube.com Jun. 27, 2015, © 2016 YouTube, LLC, [online], [site visited Mar. 2, 2016]. Available from Internet, <URL: https://www.youtube.com/watch?v=NTvvV03XFeg., 1 pg.

(56) **References Cited**

OTHER PUBLICATIONS

Raja, A Stochastic Game Theoretic Model for Expanding ATM Services. Https://ieeexplore.ieee.org/stamp/stamp.jsp?tp=&arnumber=7395687, 2015, 8 pgs.
Smart Vending Machine Demo at TechCrunch Disrupt 2613, posted at youtube.com Dec. 3, 2013, © 2016 YouTube, LLC, [online], [site visited Mar. 2, 2016]. Available from internet, , URL: https://www.youtube.com/watch?v=XEz1H-gxLj8>.
Square Mobile Credit Card Processing for iPhone, iPod, iPad, posted at youtube.com, posting date Apr. 30, 2011, © 2016 YouTube, LLC, [online], [site visited Mar. 2, 2016]. Available from internet, <URL: https://www.youtube.com/watch?v=v6sKb3CFSKw>.
Hoffman et al., "New options in Wireless payments", Internet World 7.7:37 Penton Media Inc., Penton Business Media, Inc. and their subsidiaries. (Year: 2001).
Carton et al., Framework for Mobile Payments Integration', Electronic Journal of Information Systems Evaluation, 15.1: 14-24, Academic Conferences International Limited, Jan. 2012.
Apriva LLC Awarded Patent for System and Method for Facilitating a Purchase Transaction using a Customer Device Beacon, Jun. 7, 2017, Global IP News (Year: 2017).

* cited by examiner

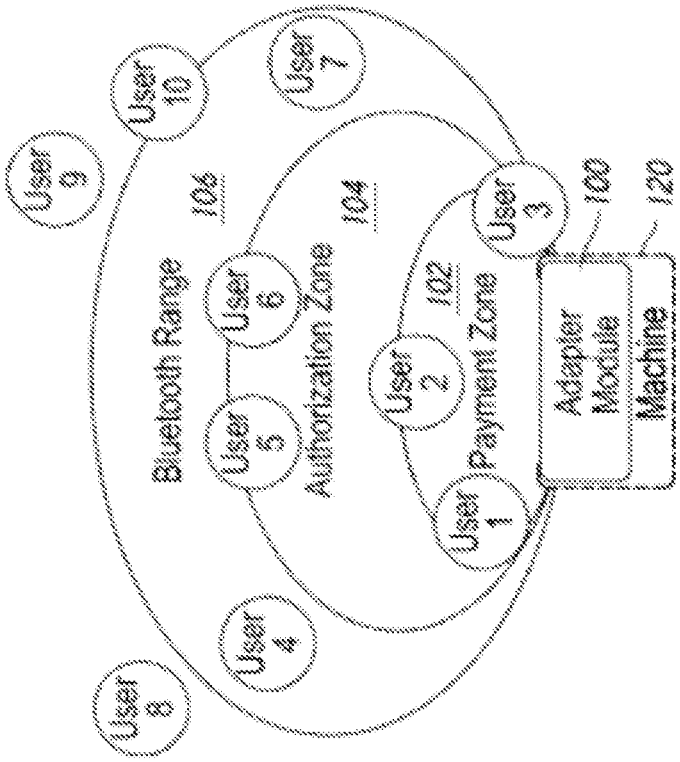

Figure 2

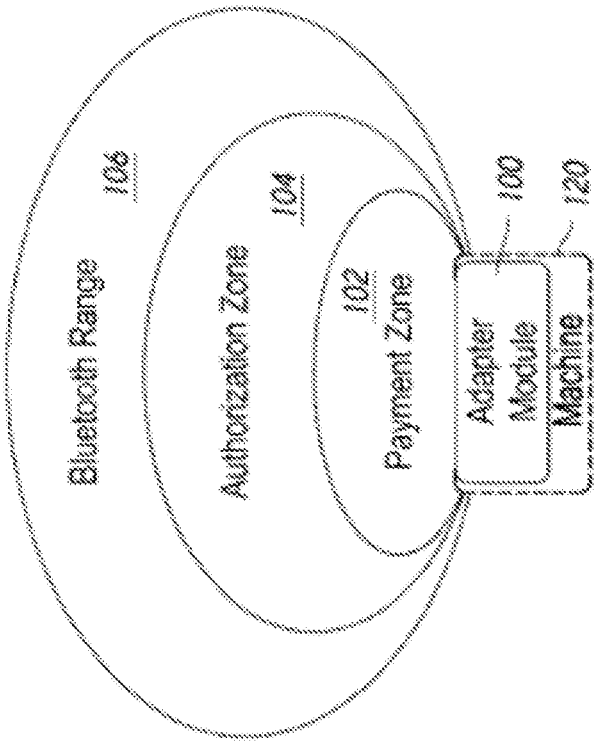

Figure 1

Tab	Favorite?	Alert	View to User
All	Yes	No	User can make Hands-free Credit with the connected vending machine
All	No	Yes	User needs to launch Mobile Device and then swipe to make transaction manually
Favorite	Yes	No	Hands-free transction will be available to the user via vending machine
Favorite	No	No	User is not alerted for the vending machine which is not a favorite machine. Hands-free mode will not work, manual swipe for transaction required by user.
Either All or Favorite	Yes	Yes	BUT Hands-free Credit is not available (disabled by module, expired AuthGrant, insufficient balance, or other issue), then user will get an alert so that user can swipe credit manually.

Figure 3

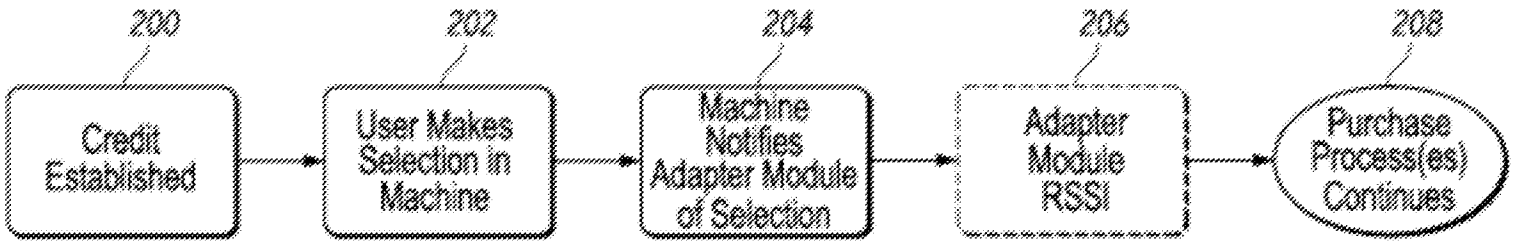

Figure 4

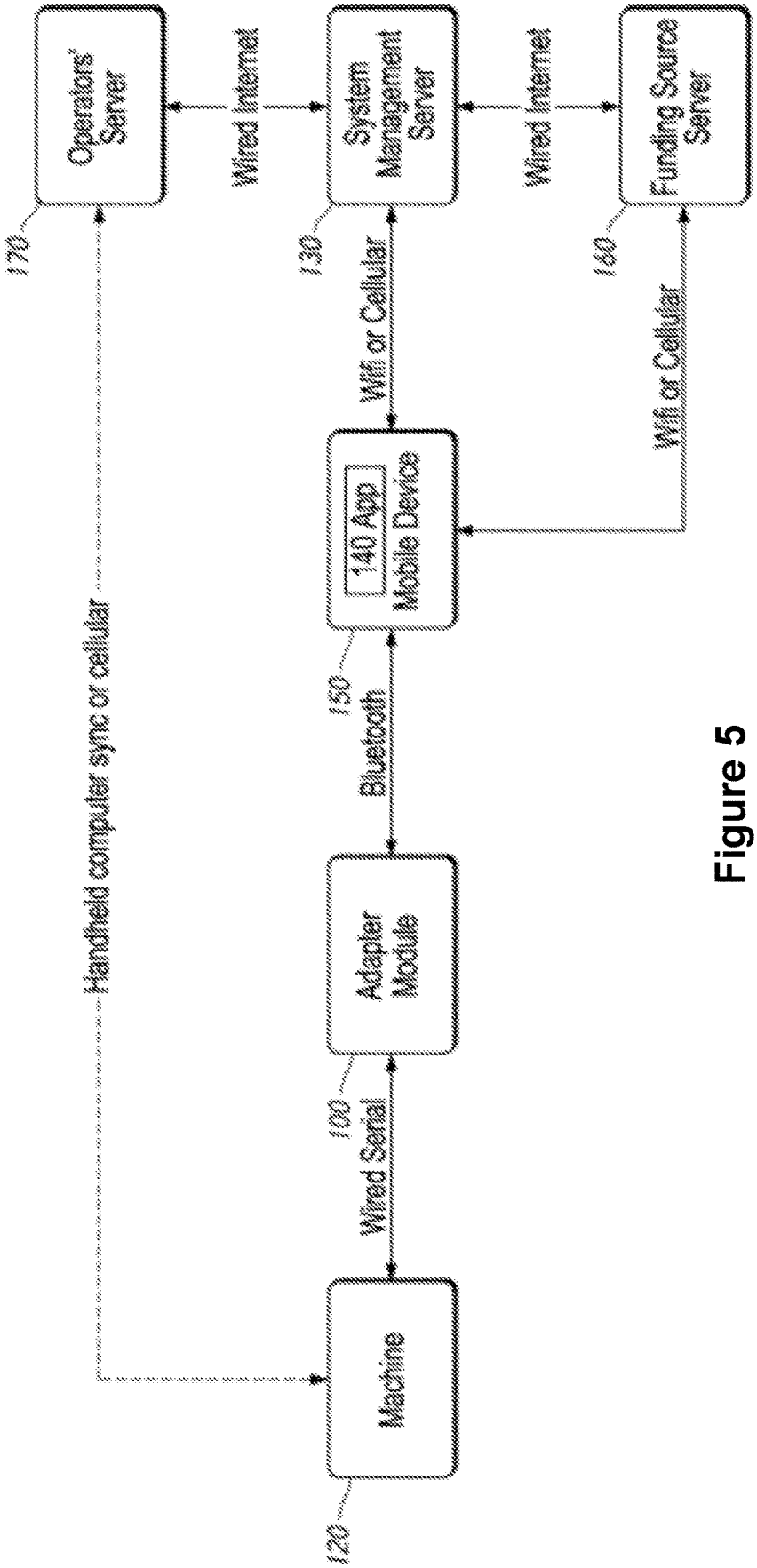
Operators' Server
170
Wired Internet
System Management Server
130
Wired Internet
Funding Source Server
160
Handheld computer sync or cellular
Wifi or Cellular
Wifi or Cellular
140 App
Mobile Device
150
Bluetooth
Adapter Module
100
Wired Serial
Machine
120

Figure 5

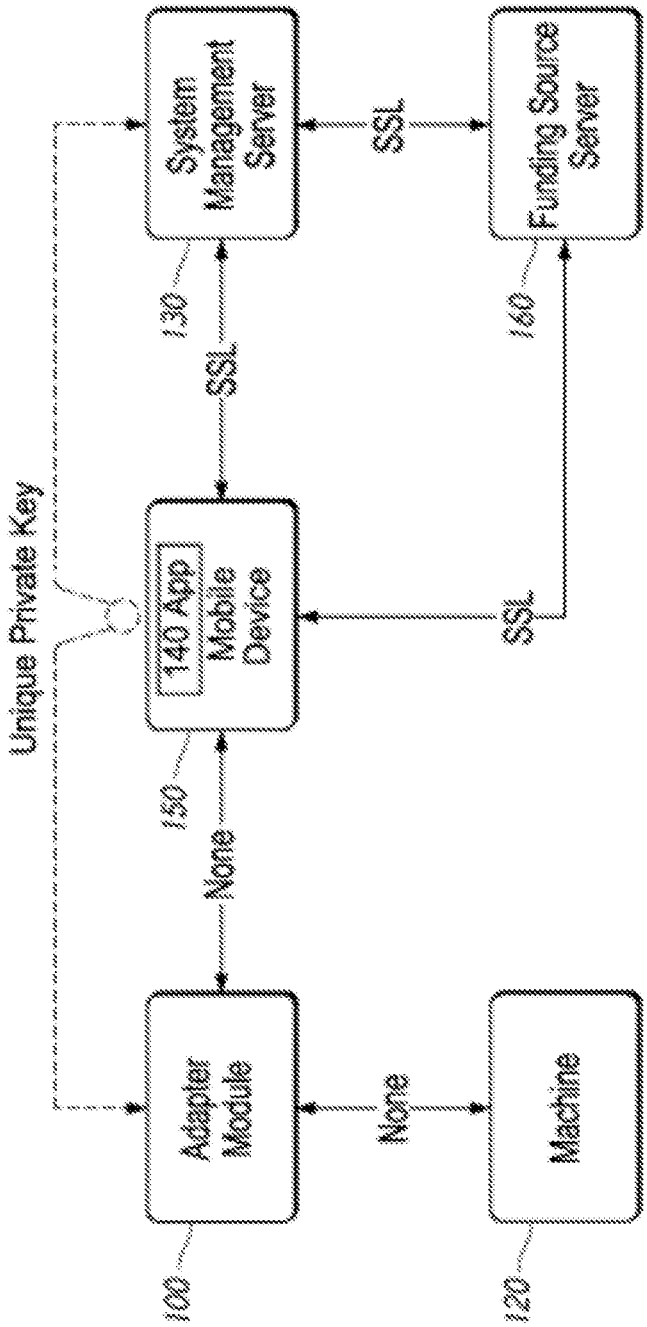
Unique Private Key
System Management Server
130
SSL
Funding Source Server
140
SSL
140 App
Mobile Device
150
None
Adapter Module
100
None
Machine
120

Figure 6

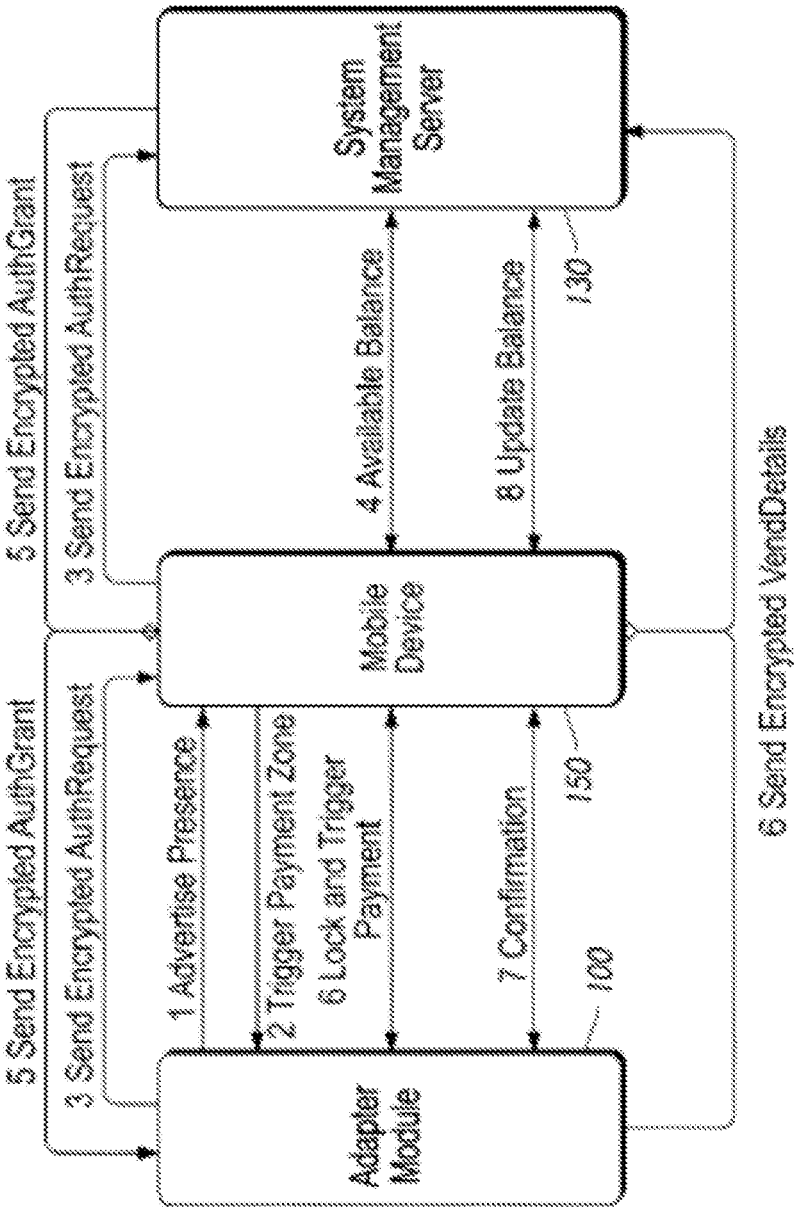
System Management Server
130
5 Send Encrypted AuthGrant
3 Send Encrypted AuthRequest
4 Available Balance
8 Update Balance
Mobile Device
150
5 Send Encrypted AuthGrant
3 Send Encrypted AuthRequest
1 Advertise Presence
2 Trigger Payment Zone
6 Lock and Trigger Payment
7 Confirmation
6 Send Encrypted VendDetails
Adapter Module
100

Figure 7

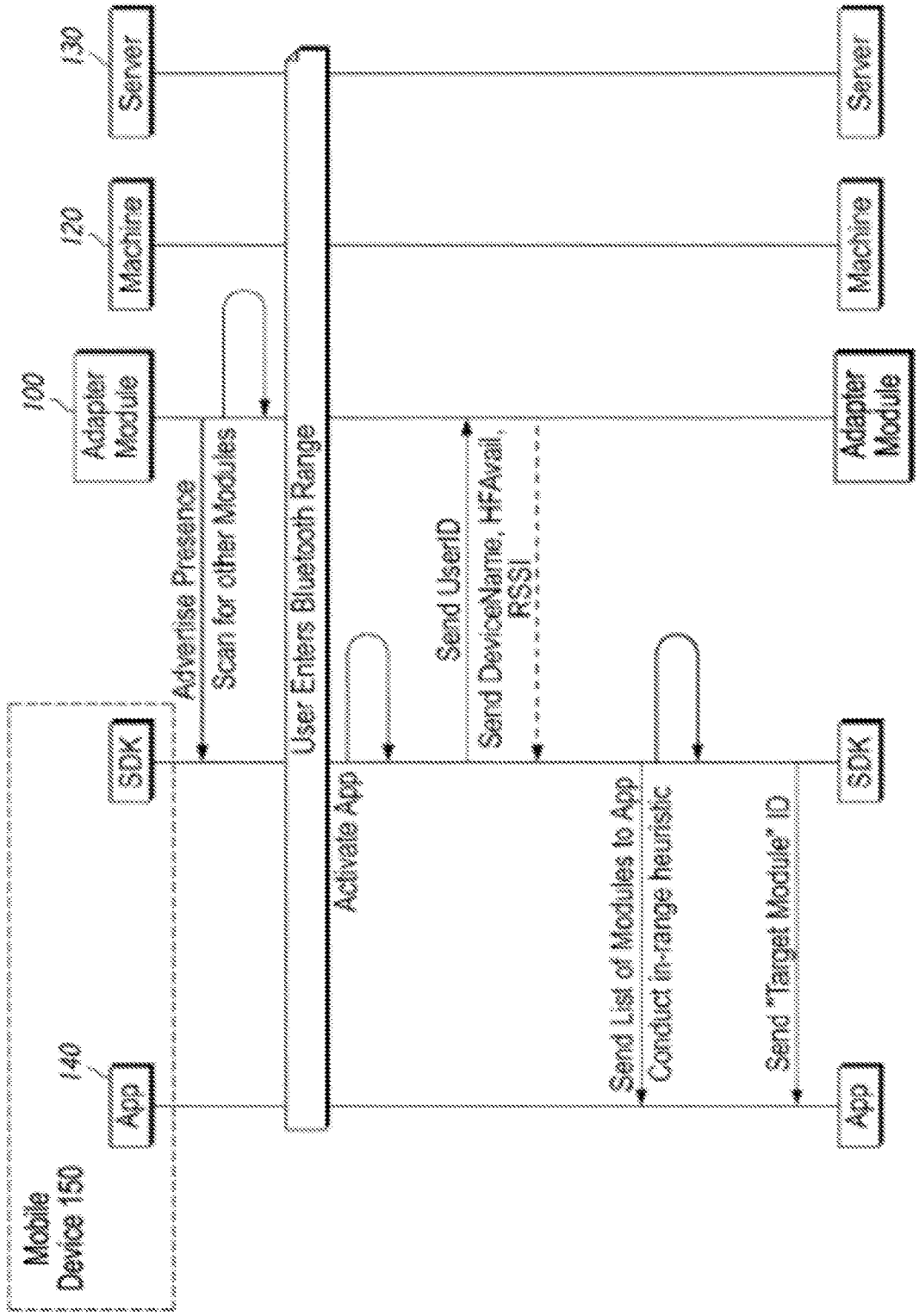
Mobile Device 150
140
App
SDK
100
Adapter Module
120
Machine
130
Server
Advertise Presence
Scan for other Modules
User Enters Bluetooth Range
Activate App
Send UserID
Send DeviceName, HFAvail, RSSI
Send List of Modules to App
Conduct in-range heuristic
Send "Target Module" ID
App
SDK
Adapter Module
Machine
Server

Figure 8A

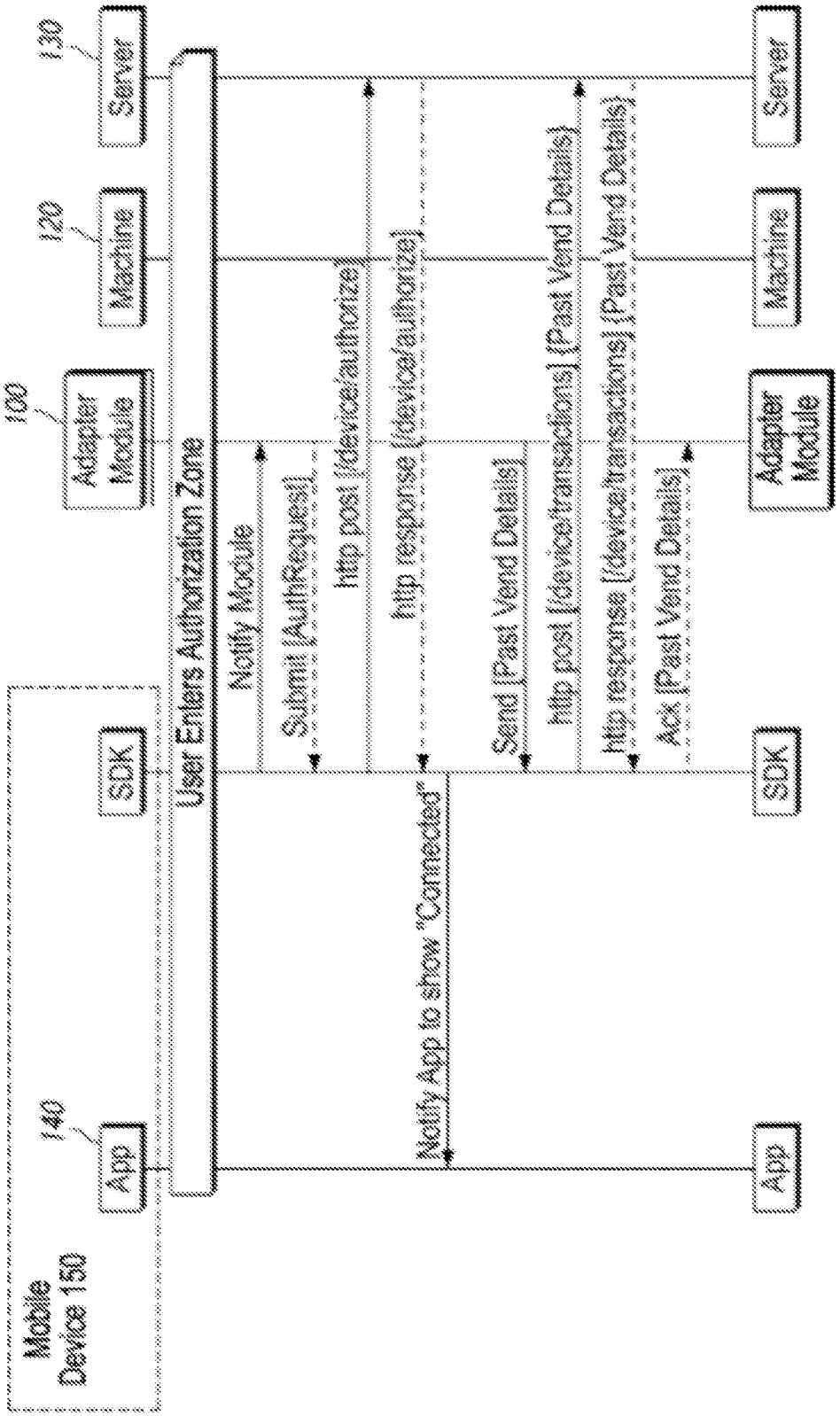
Mobile Device 150
140
App
SDK
100
Adapter Module
120
Machine
130
Server
User Enters Authorization Zone
Notify Module
Submit [AuthRequest]
http post [device/authorize]
http response [device/authorize]
Send [Past Vend Details]
http post [device/transactions] [Past Vend Details]
http response [device/transactions] [Past Vend Details]
Ack [Past Vend Details]
Notify App to show "Connected"
App
SDK
Adapter Module
Machine
Server

Figure 8B

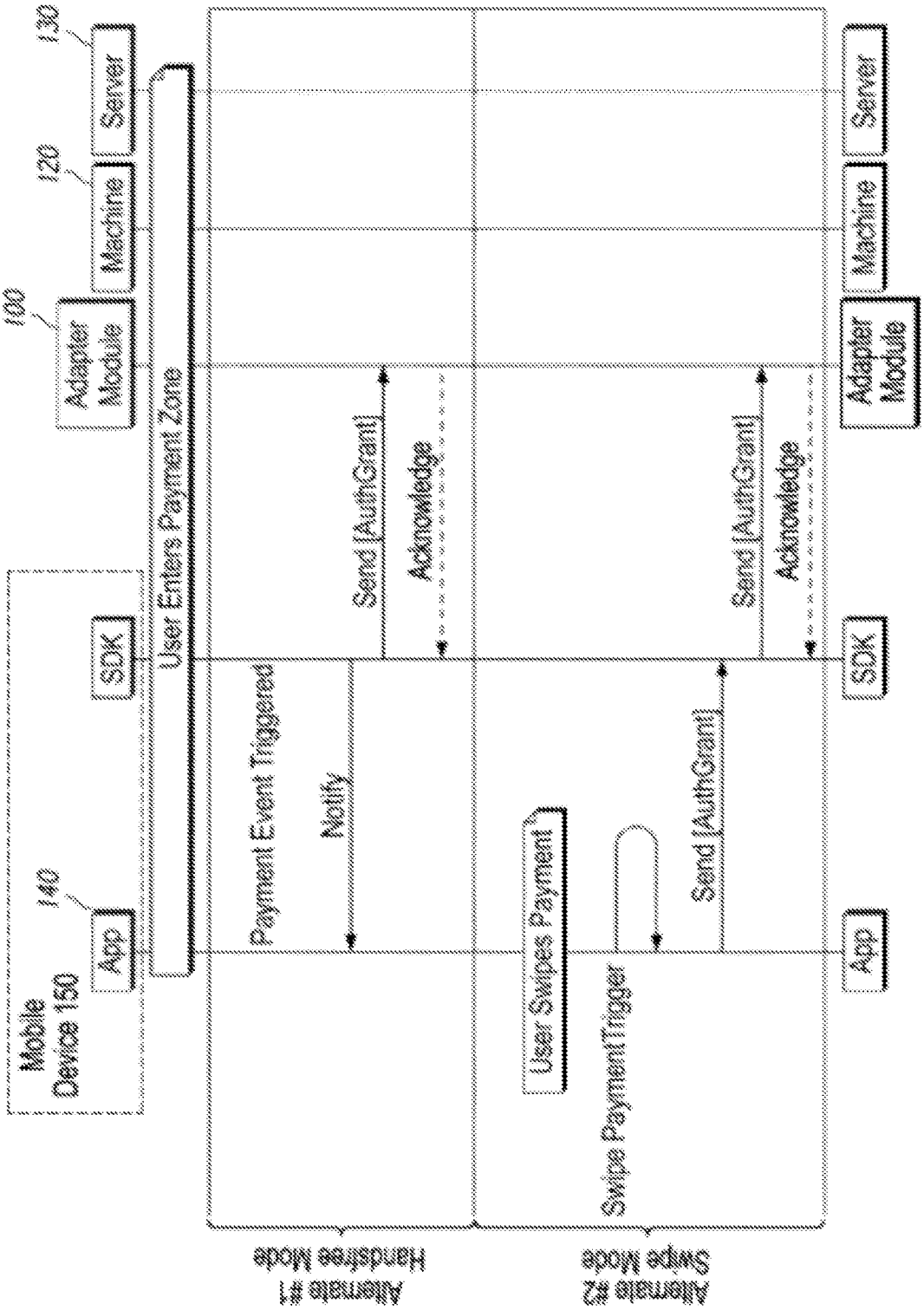
Mobile Device 150
App
140
SDK
User Enters Payment Zone
Adapter Module
100
Machine
120
Server
130
Payment Event Triggered
Notify
Send [AuthGrant]
Acknowledge
User Swipes Payment
Swipe Payment Trigger
Send [AuthGrant]
Send [AuthGrant]
Acknowledge
App
SDK
Adapter Module
Machine
Server
Alternate #1 Handsfree Mode
Alternate #2 Swipe Mode

Figure 8C

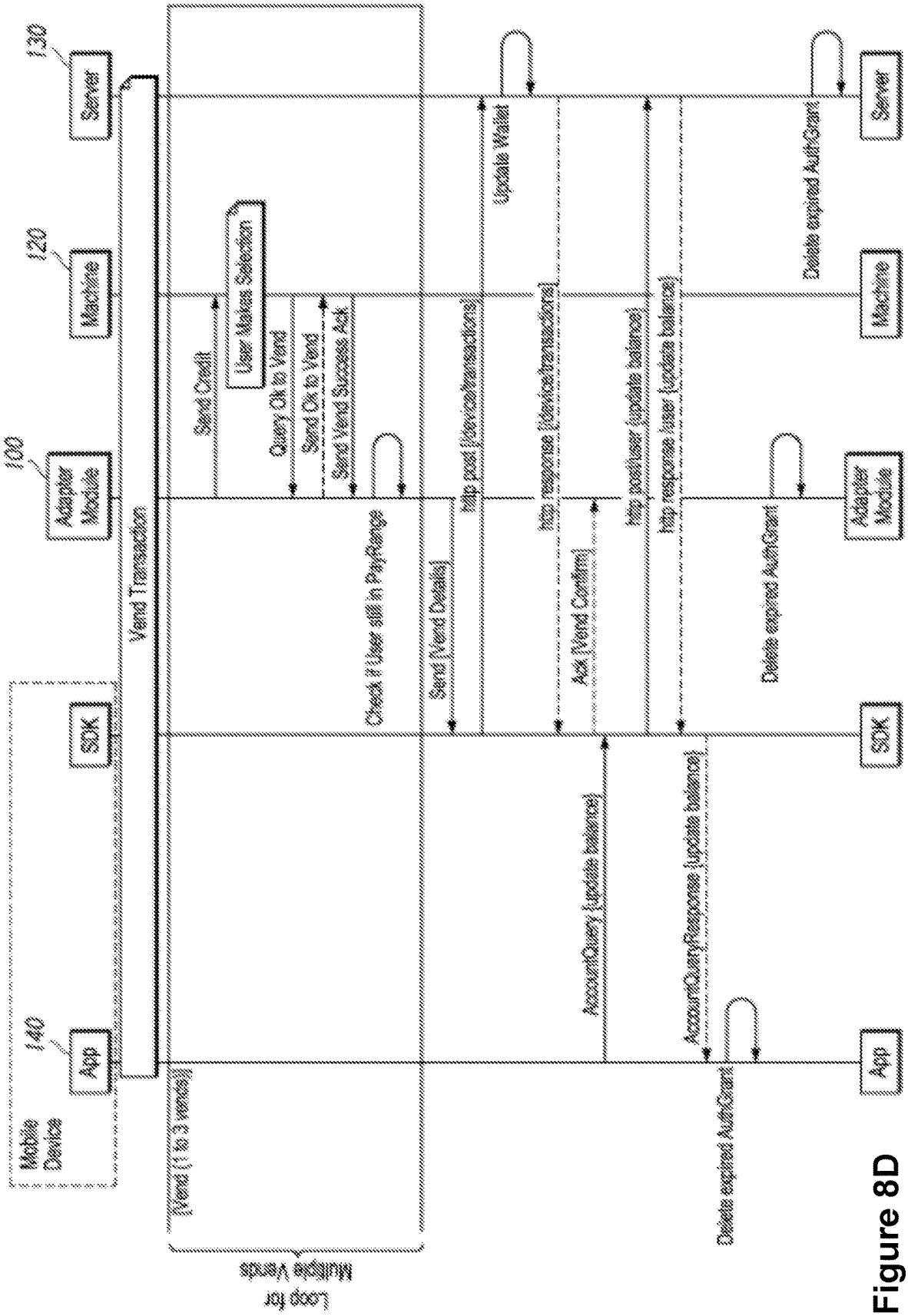
Mobile Device
App
140
SDK
Adapter Module
100
Machine
120
Server
130
Vend Transaction
[Vend (1 to 3 vends)]
Loop for Multiple Vends
Send Credit
User Makes Selection
Query Ok to Vend
Send Ok to Vend
Send Vend Success Ack
Check if User still in PayRange
Send [Vend Details]
http post [vendtransactions]
Update Wallet
http response [devicetransactions]
Ack [Vend Confirm]
AccountQuery [update balance]
http post[user [update balance]
http response user [update balance]
AccountQueryResponse [update balance]
Delete expired AuthGrant
Delete expired AuthGrant
Delete expired AuthGrant

Figure 8D

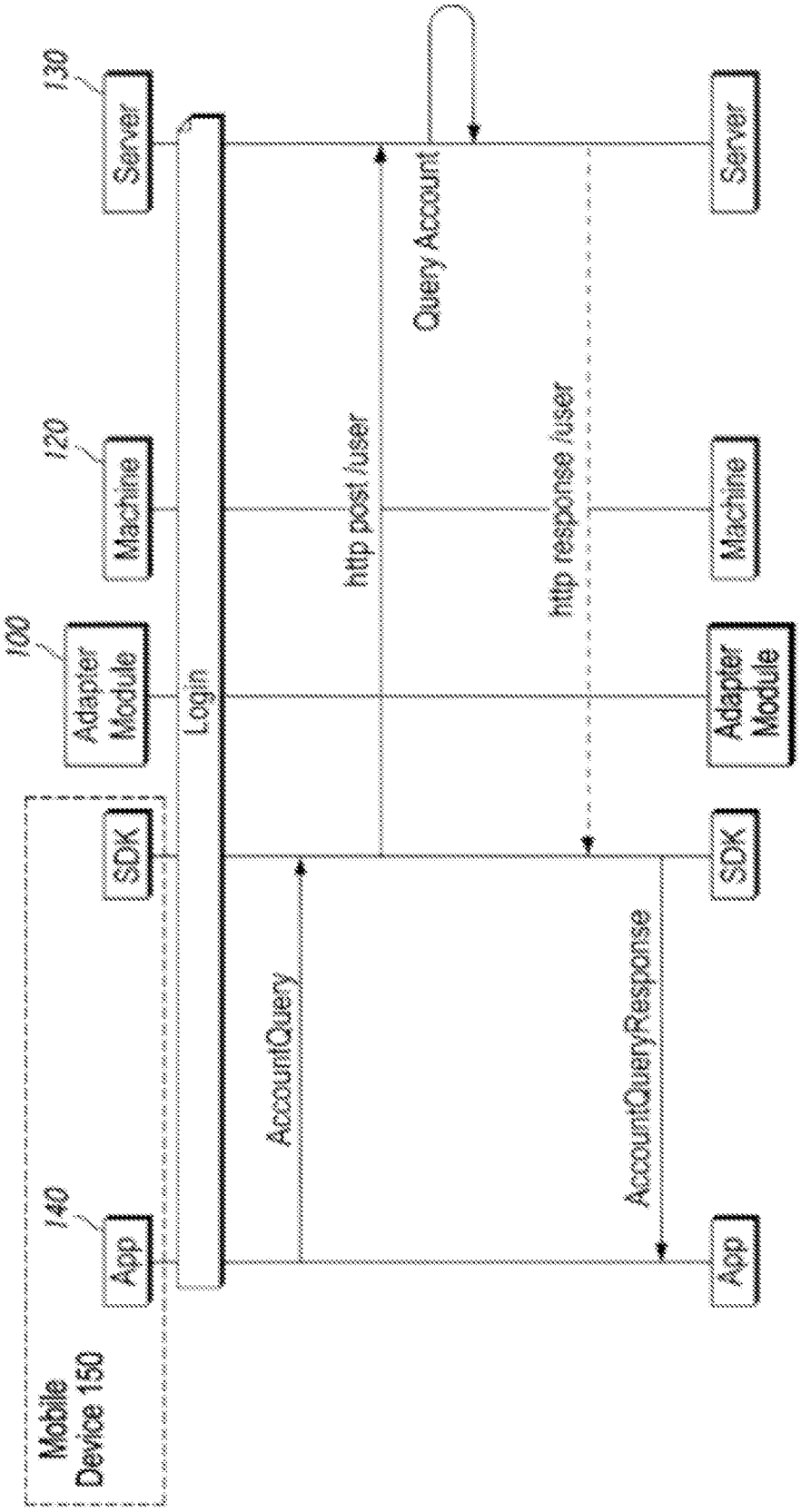
Mobile Device 150
140
App
SDK
100
Adapter Module
120
Machine
130
Server
Login
AccountQuery
http post /user
Query Account
http response /user
AccountQueryResponse
App
SDK
Adapter Module
Machine
Server

Figure 8E

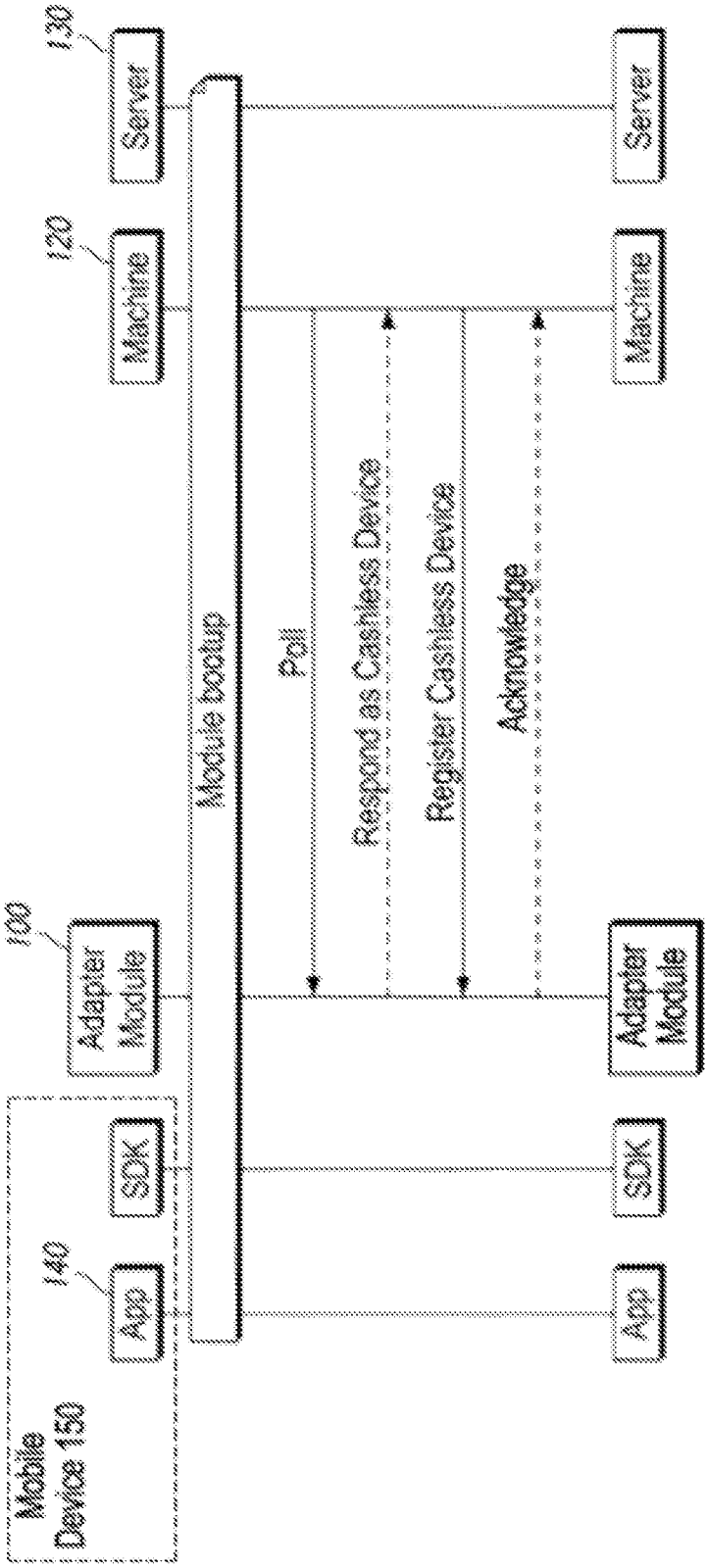
Mobile Device 150
140
App
SDK
100
Adapter Module
120
Machine
130
Server
Module bootup
Poll
Respond as Cashless Device
Register Cashless Device
Acknowledge
App
SDK
Adapter Module
Machine
Server

Figure 8F

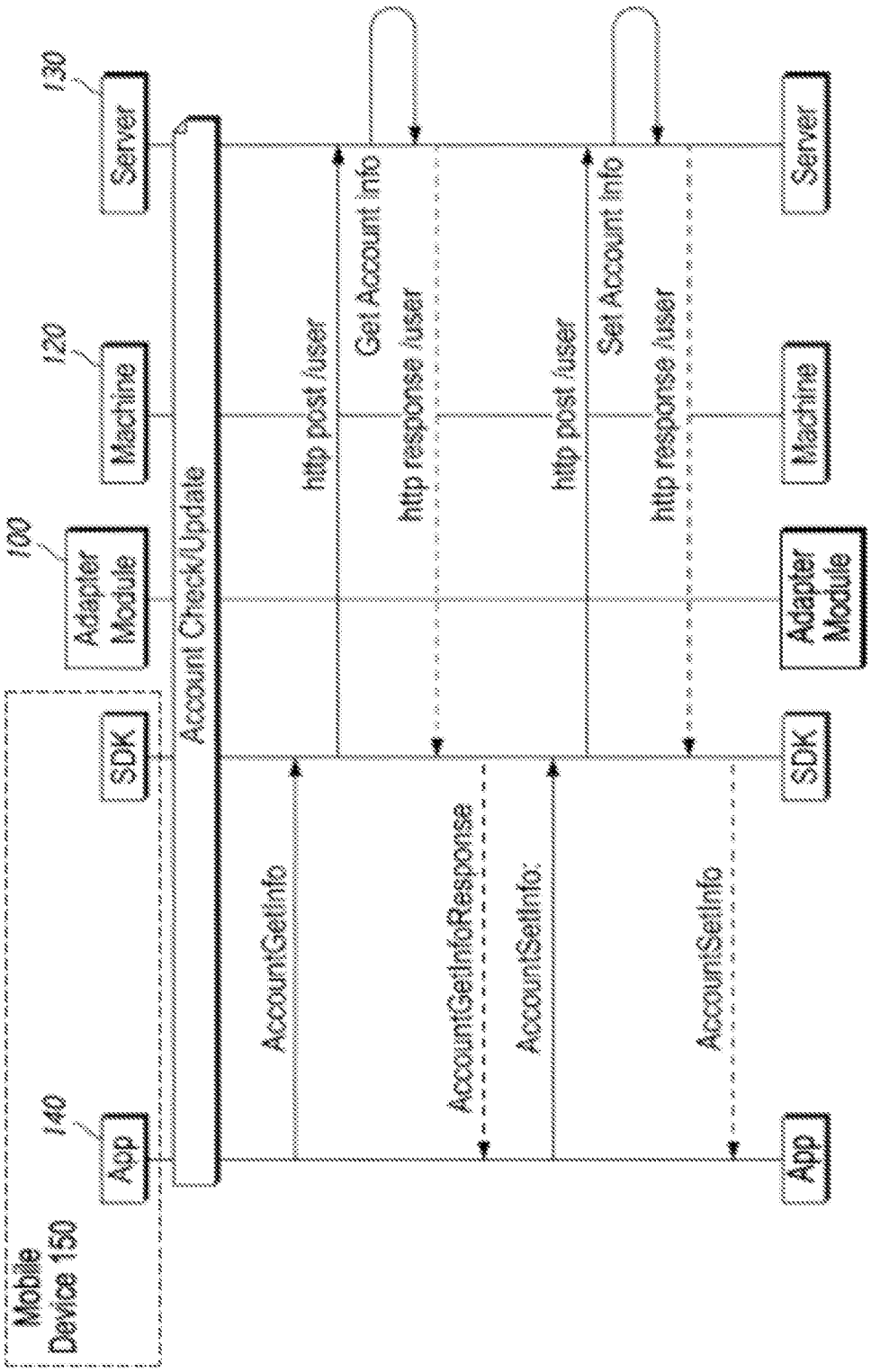
Mobile Device 150
140
App
SDK
100
Adapter Module
120
Machine
130
Server
Account Check/Update
AccountGetInfo
http post /user
Get Account Info
http response /user
AccountGetInfoResponse
AccountSetInfo
http post /user
Set Account Info
http response /user
AccountSetInfo
App
SDK
Adapter Module
Machine
Server

Figure 8G

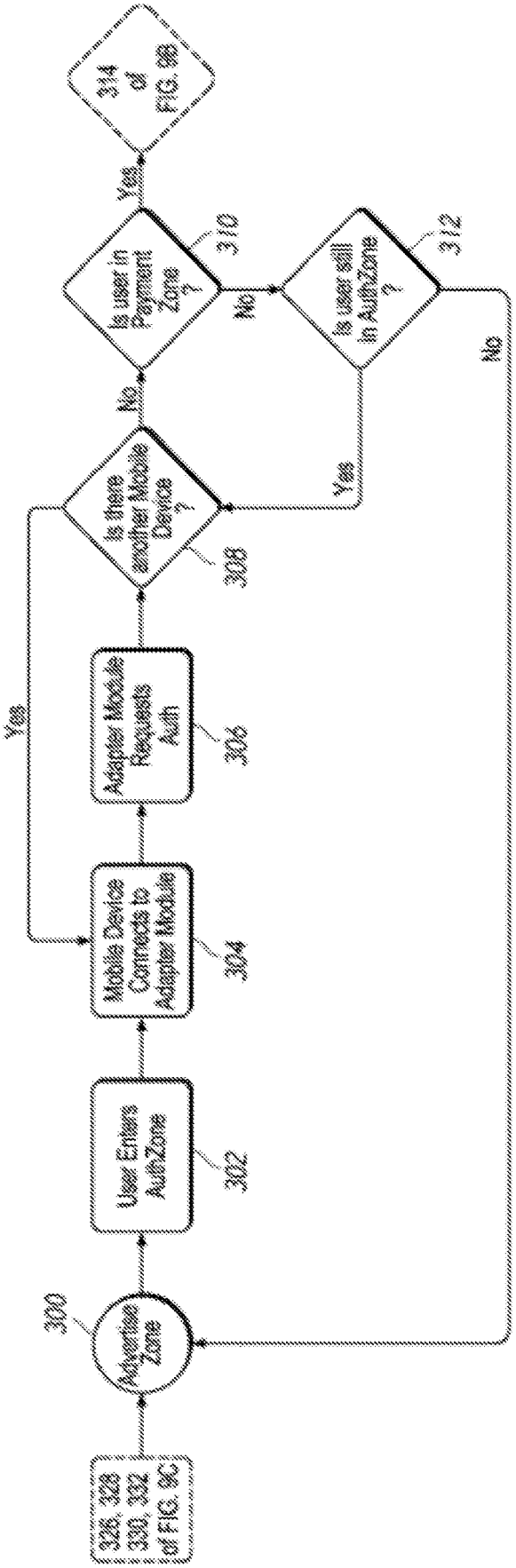
326, 328
330, 332
of FIG. 9C
300
Advertise Zone
302
User Enters AuthZone
304
Mobile Device Connects to Adapter Module
306
Adapter Module Requests Auth
308
Is there another Mobile Device ?
Yes
No
310
Is user in Payment Zone ?
Yes
No
312
Is user still in AuthZone ?
Yes
No
314
of
FIG. 9B

Figure 9A

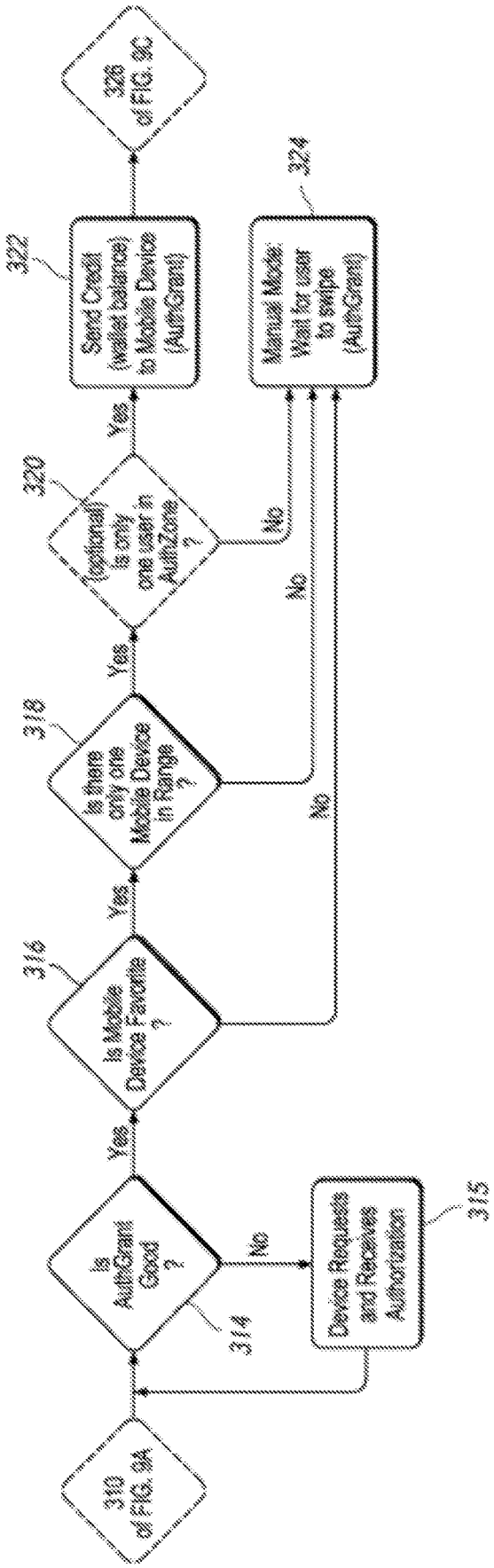
310
of FIG. 9A
Is AuthGrant Good ?
314
Yes
No
Device Requests and Receives Authorization
315
316
Is Mobile Device Favorite ?
Yes
No
318
Is there only one Mobile Device in Range ?
Yes
No
320
(optional) Is only one user in AuthZone ?
Yes
No
322
Send Credit (wallet balance) to Mobile Device (AuthGrant)
Yes
324
Manual Mode: Wait for user to swipe (AuthGrant)
326
of FIG. 9C

Figure 9B

Figure 9C

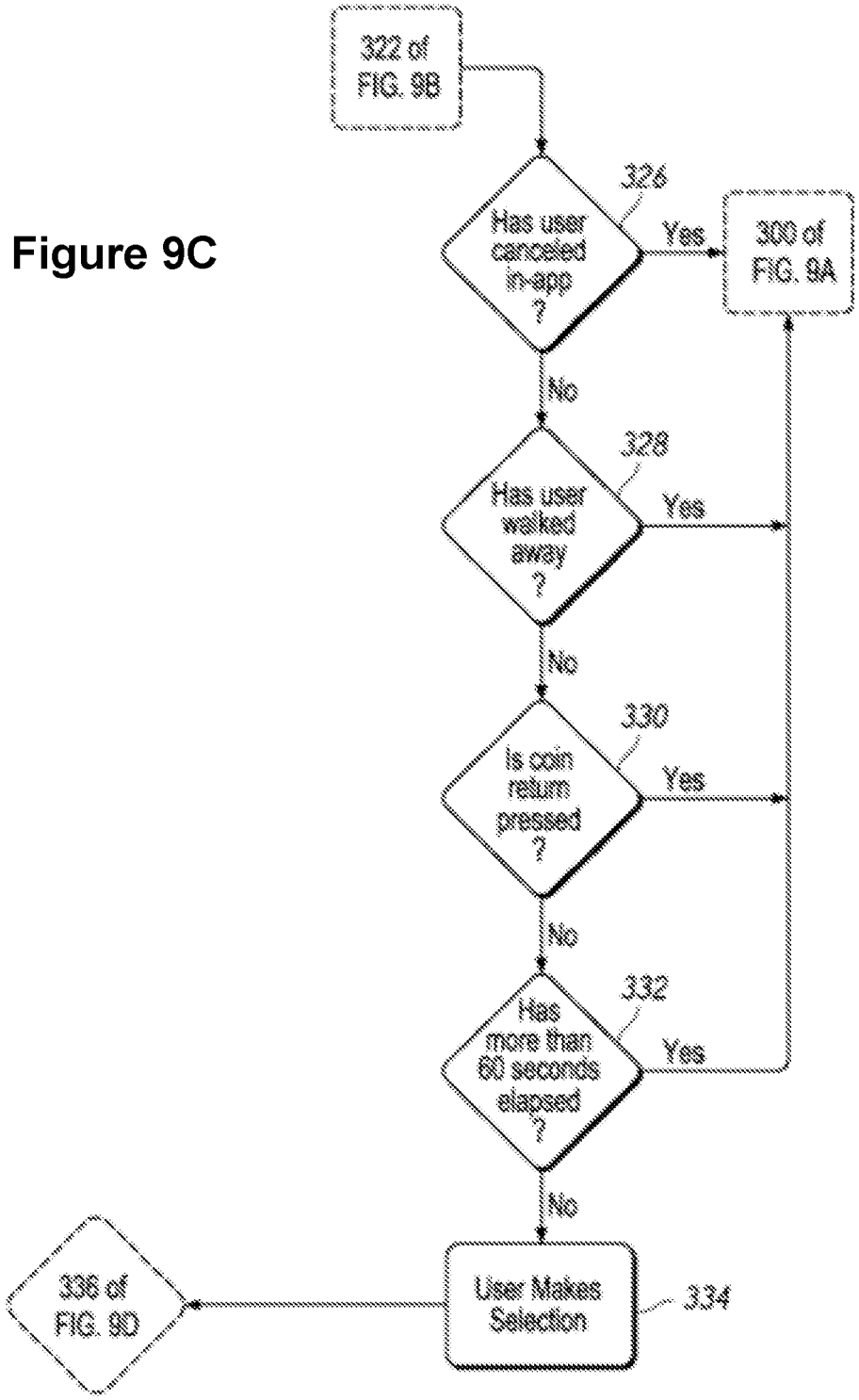
322 of FIG. 9B
326
Has user canceled in-app ?
Yes
300 of FIG. 9A
No
328
Has user walked away ?
Yes
No
330
Is coin return pressed ?
Yes
No
332
Has more than 60 seconds elapsed ?
Yes
No
User Makes Selection
334
336 of FIG. 9D

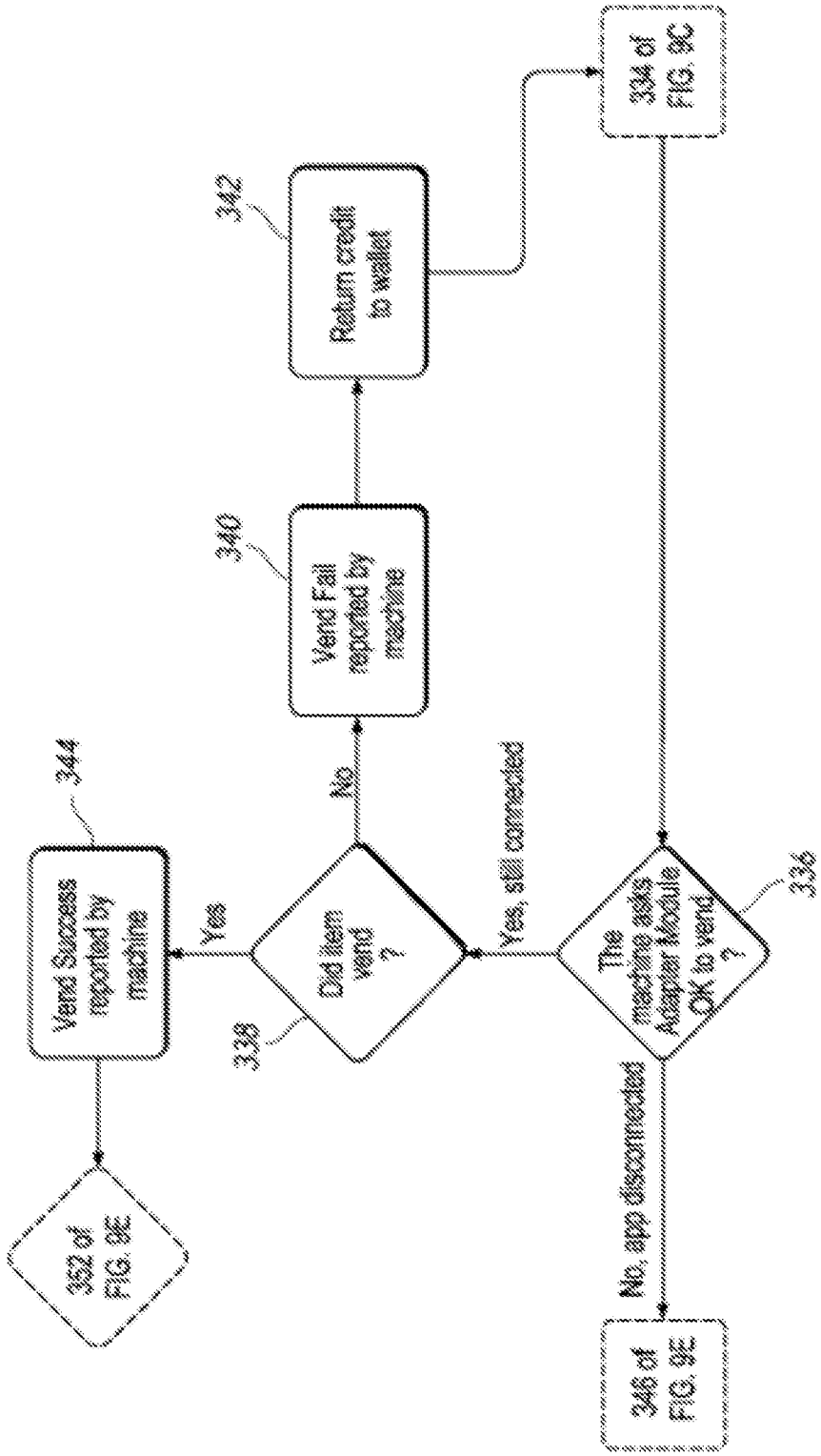
Vend Success reported by machine
344
352 of FIG. 9E
Yes
Did item vend ?
338
No
Vend Fail reported by machine
340
Return credit to wallet
342
334 of FIG. 9C
Yes, still connected
The machine asks Adapter Module OK to vend ?
336
No, app disconnected
346 of FIG. 9E

Figure 9D

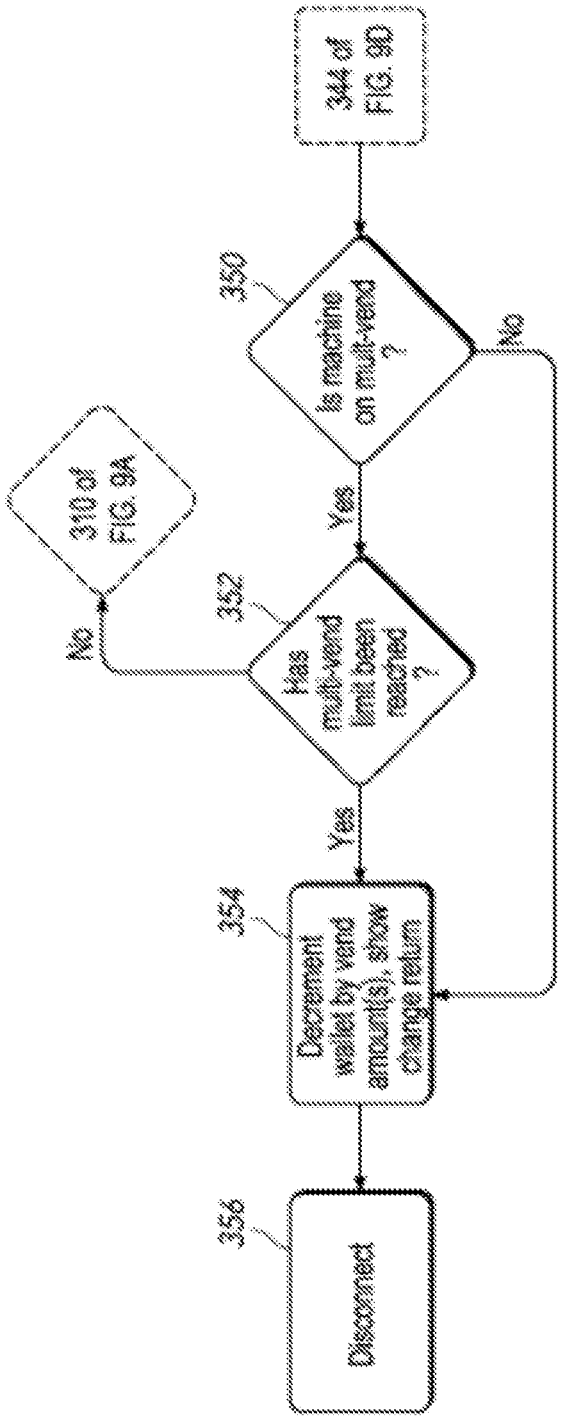
344 of FIG. 9D
350
Is machine on multi-vend ?
No
Yes
310 of FIG. 9A
No
352
Has multi-vend limit been reached ?
Yes
354
Decrement vended by vend amount(s), show change return
356
Disconnect

Figure 9E

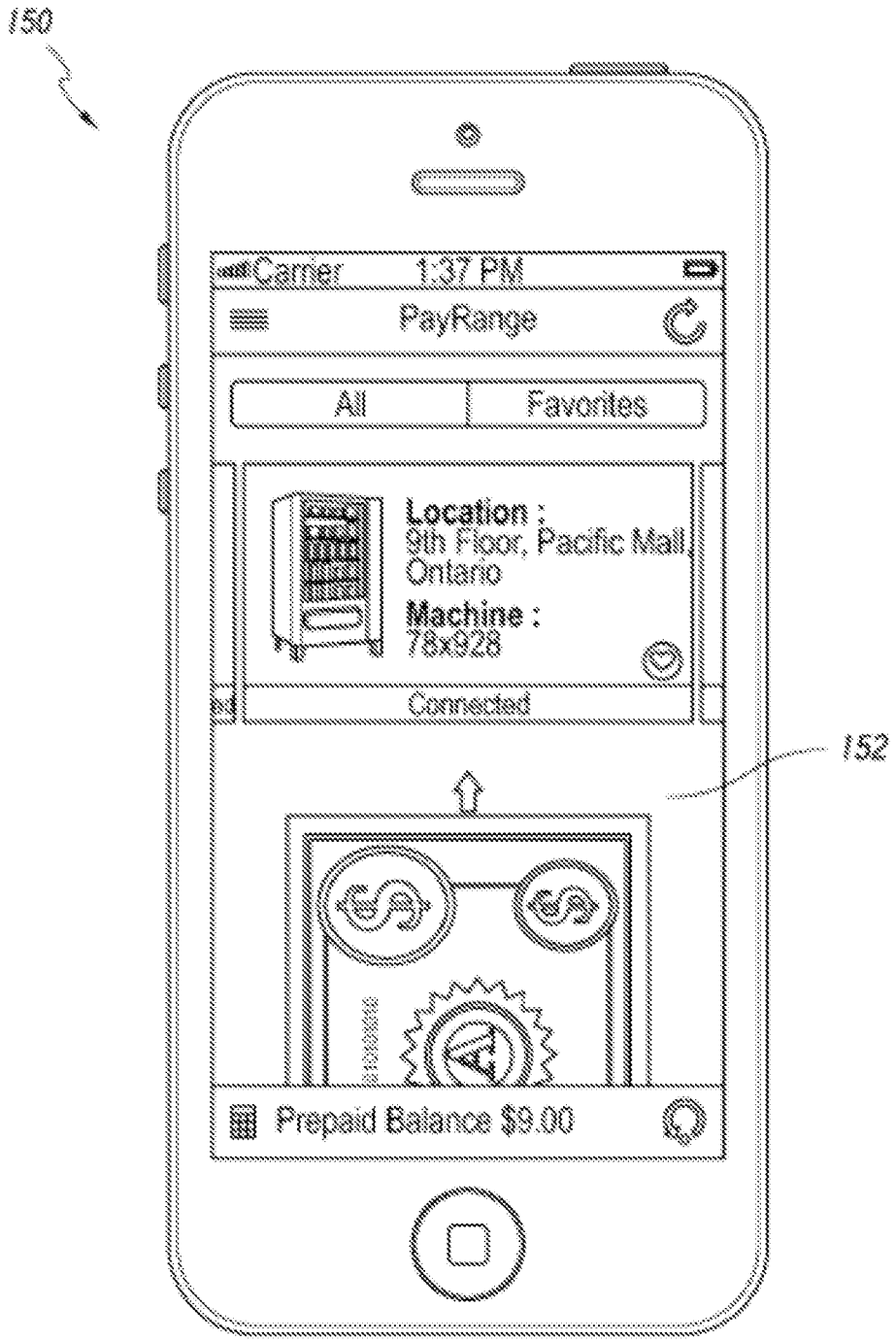
150
Carrier 1:37 PM
PayRange
All
Favorites
Location :
9th Floor, Pacific Mall
Ontario
Machine :
78x928
Connected
152
Prepaid Balance $9.00

Figure 10A

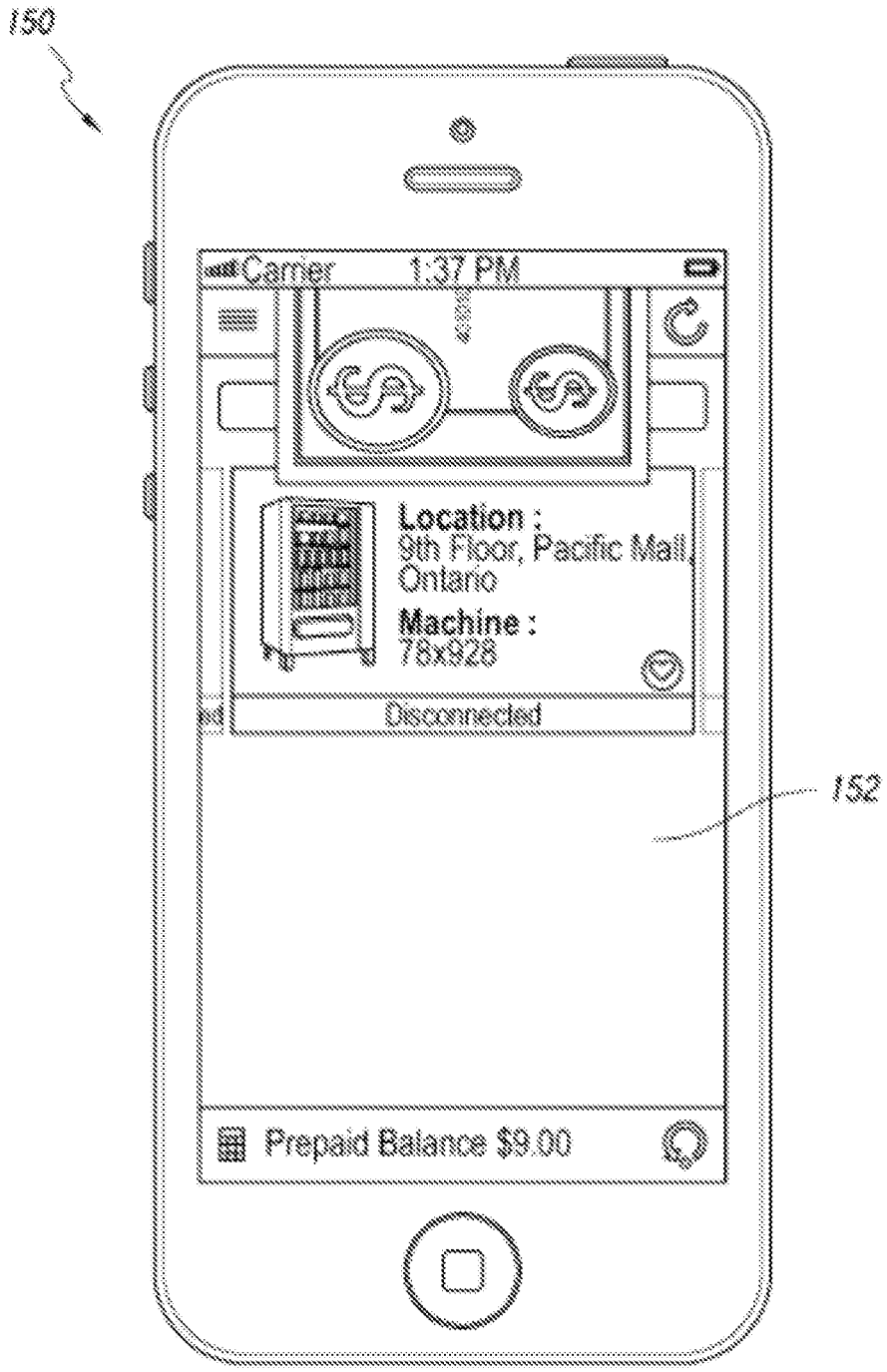
150
Carrier
1:37 PM
Location :
9th Floor, Pacific Mall,
Ontario
Machine :
78x928
Disconnected
152
Prepaid Balance $9.00

Figure 10B

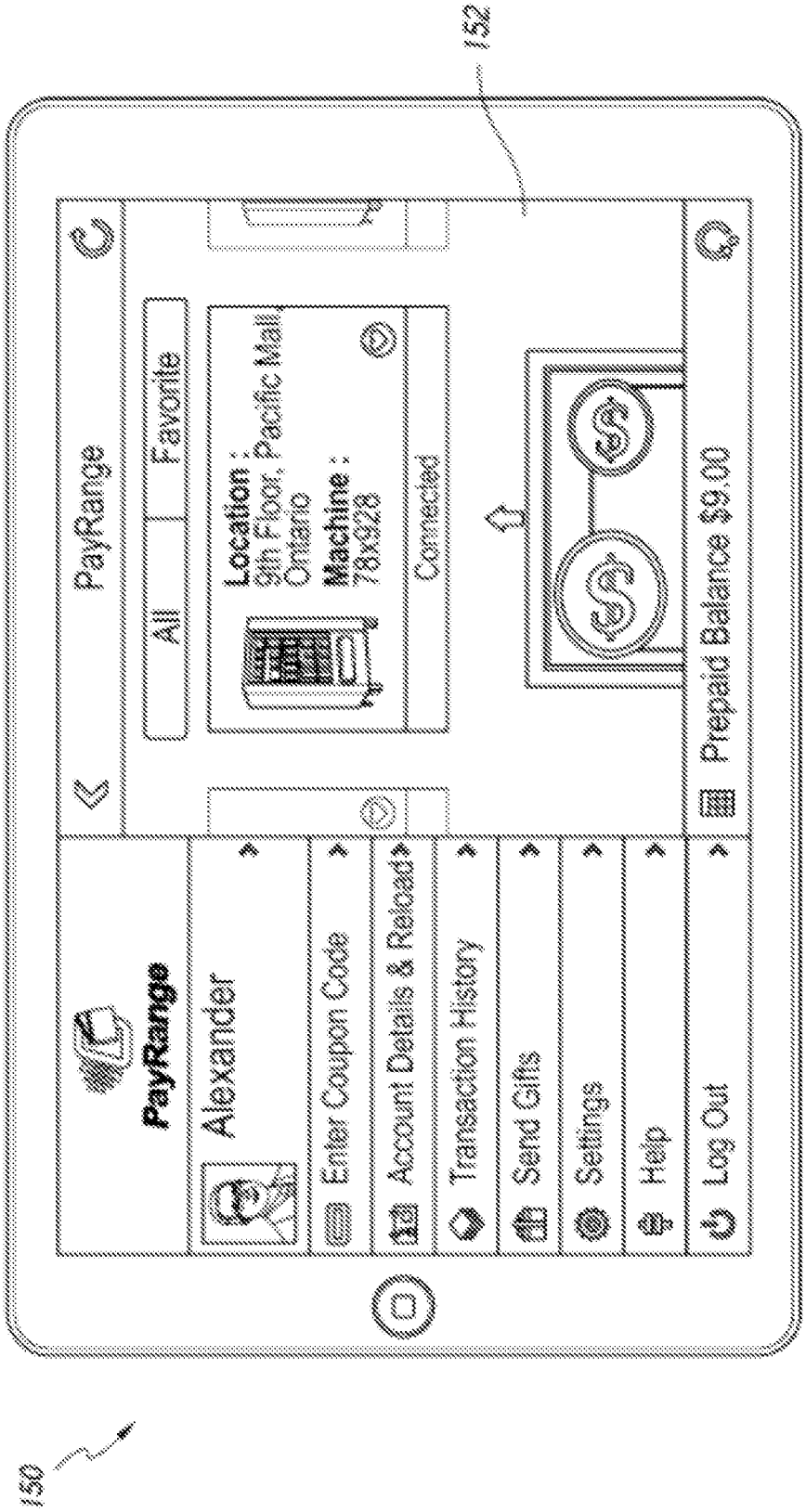
152
PayRange
All
Favorite
Location :
9th Floor, Pacific Mall,
Ontario
Machine :
78x928
Connected
Prepaid Balance $9.00
PayRange
Alexander
Enter Coupon Code
Account Details & Reload
Transaction History
Send Gifts
Settings
Help
Log Out
150

Figure 10C

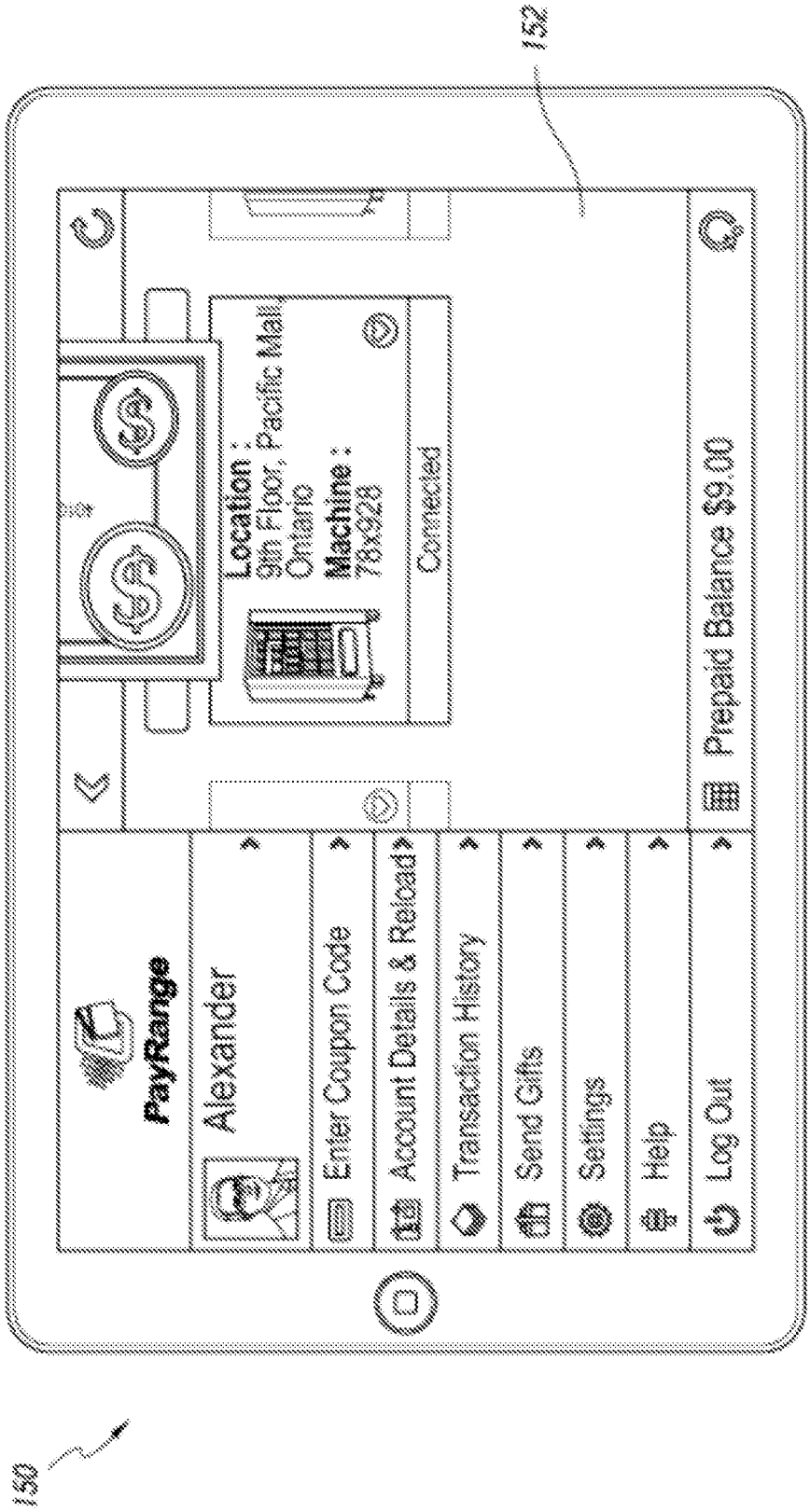
152
PayRange
Alexander
Enter Coupon Code
Account Details & Reload
Transaction History
Send Gifts
Settings
Help
Log Out
Location :
9th Floor, Pacific Mall
Ontario
Machine :
78x928
Connected
Prepaid Balance $9.00
150

Figure 10D

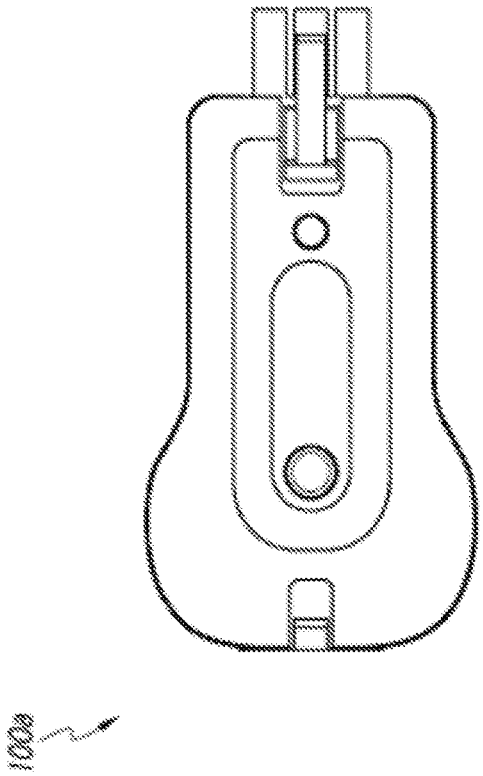

Figure 12

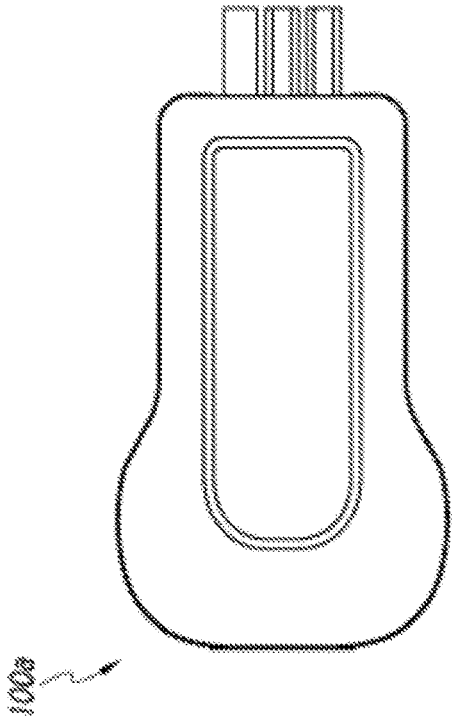

Figure 13

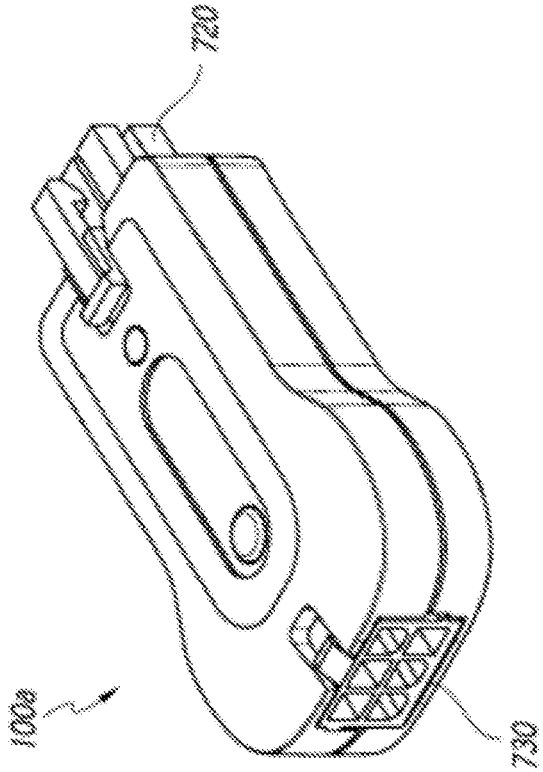

Figure 11

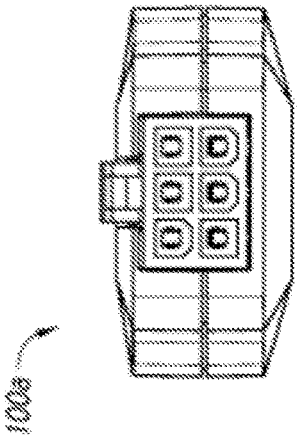

Figure 16

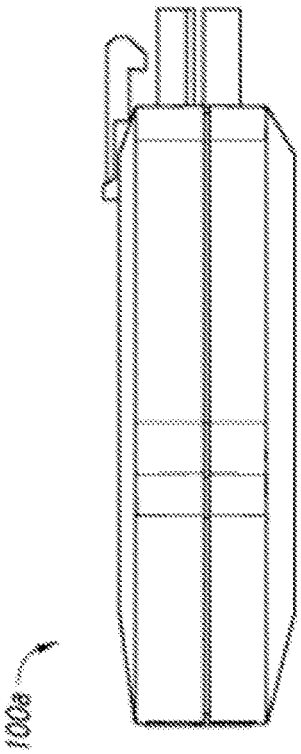

Figure 14

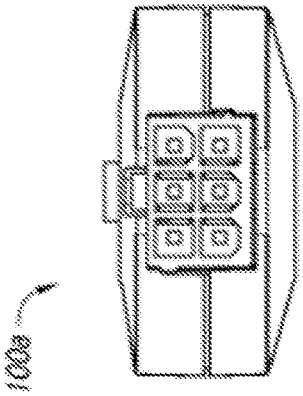

Figure 15

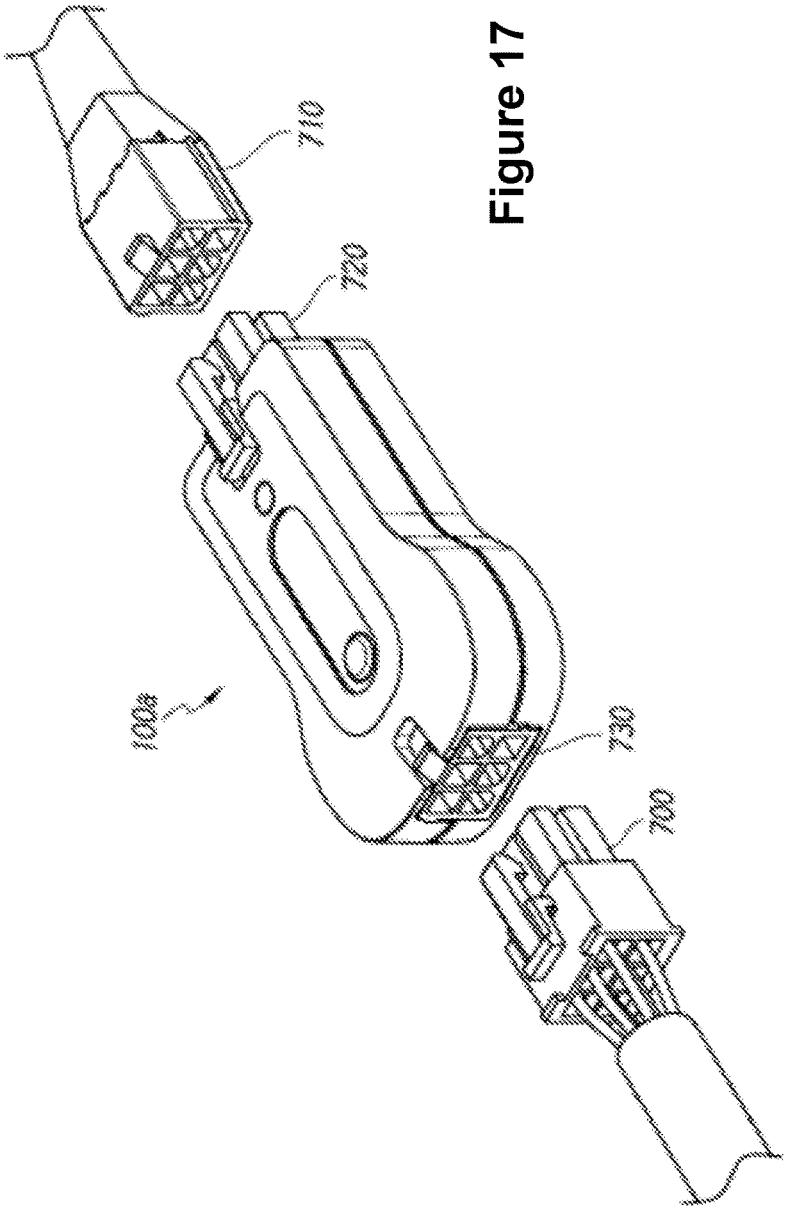

Figure 17

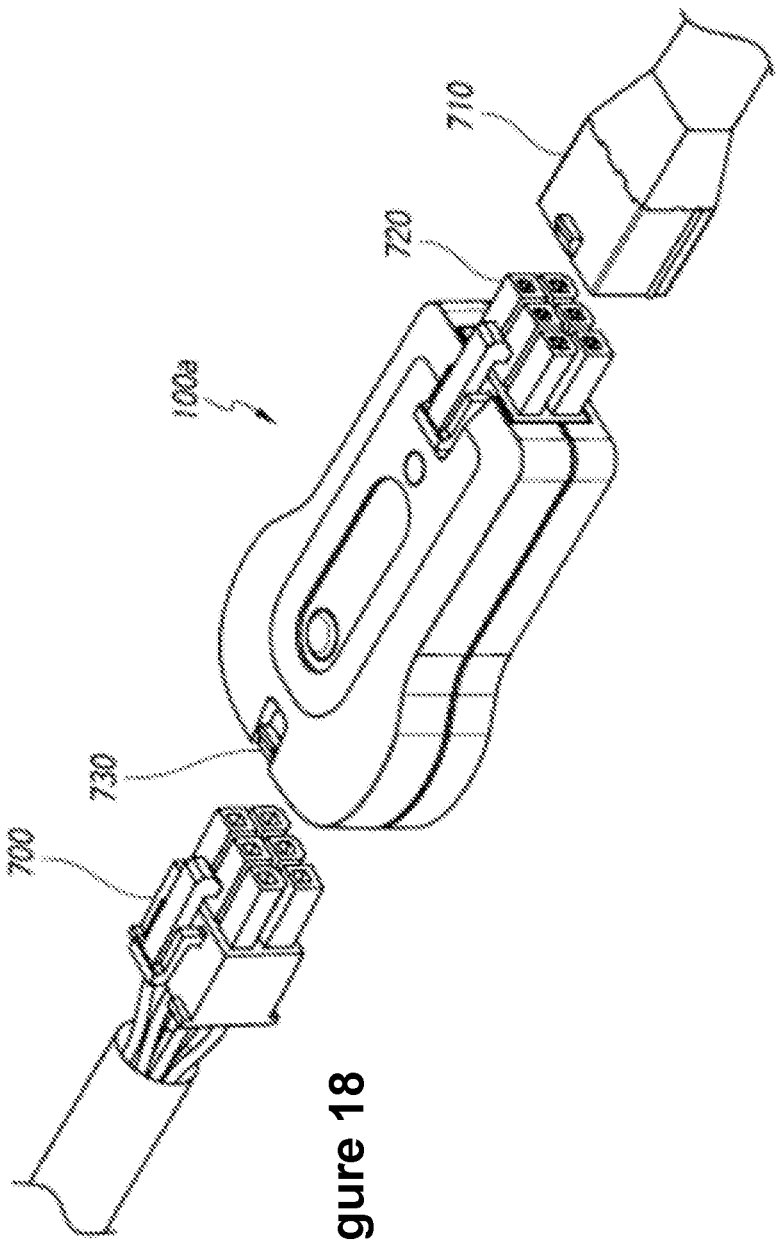

Figure 18

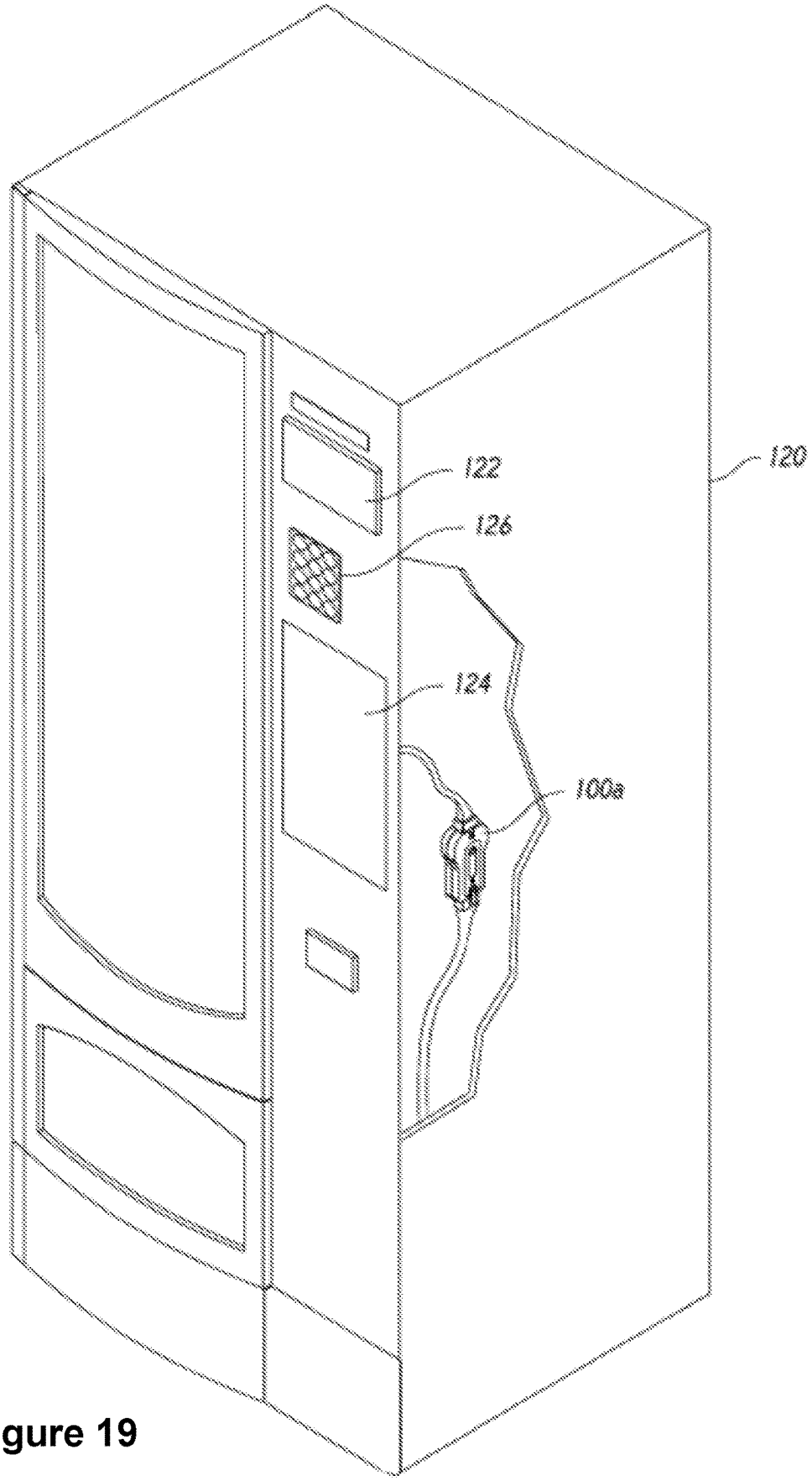

Figure 19

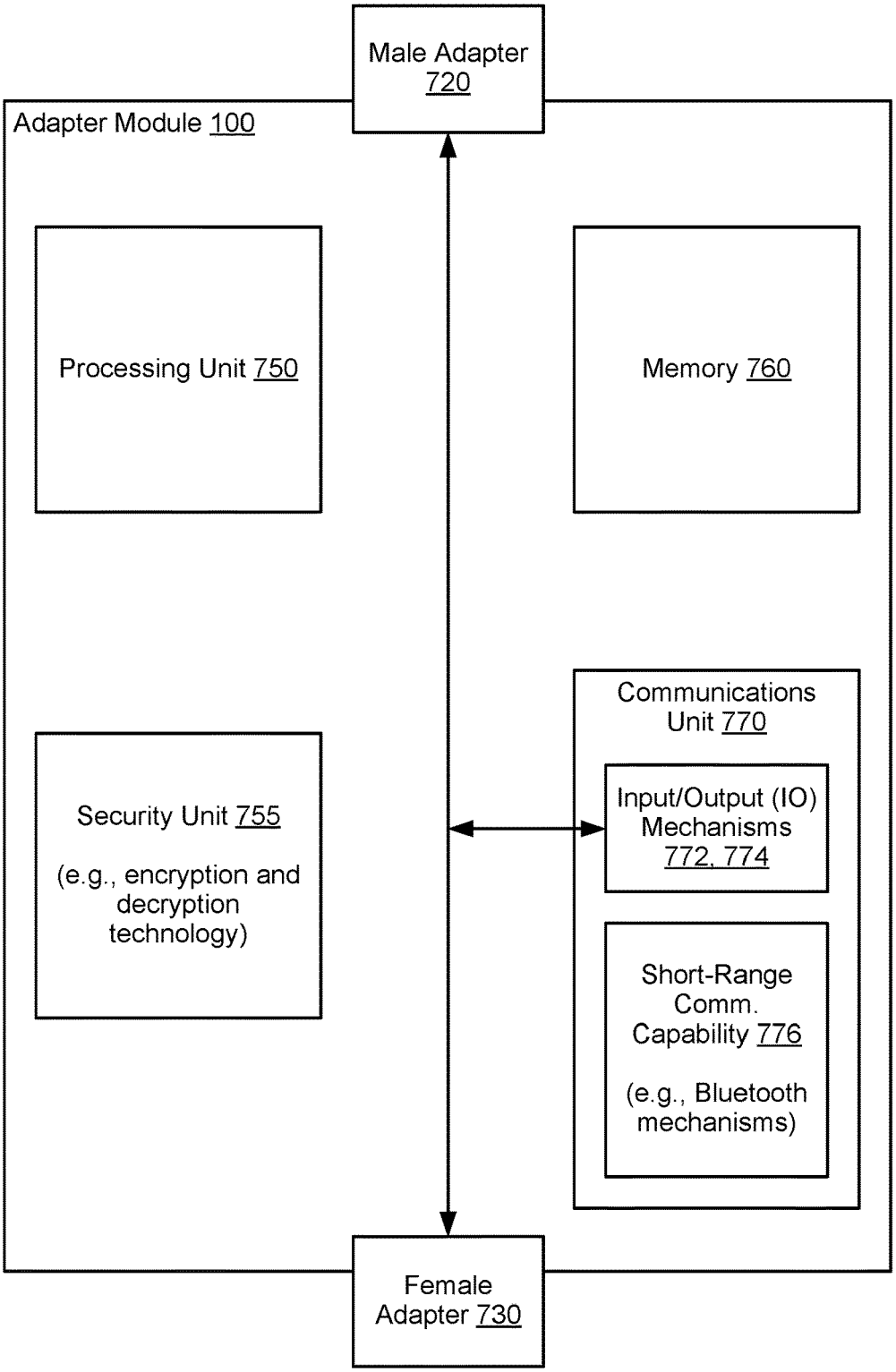
Male Adapter 720
Adapter Module 100
Processing Unit 750
Memory 760
Communications Unit 770
Input/Output (IO) Mechanisms 772, 774
Security Unit 755
(e.g., encryption and decryption technology)
Short-Range Comm. Capability 776
(e.g., Bluetooth mechanisms)
Female Adapter 730

Figure 20

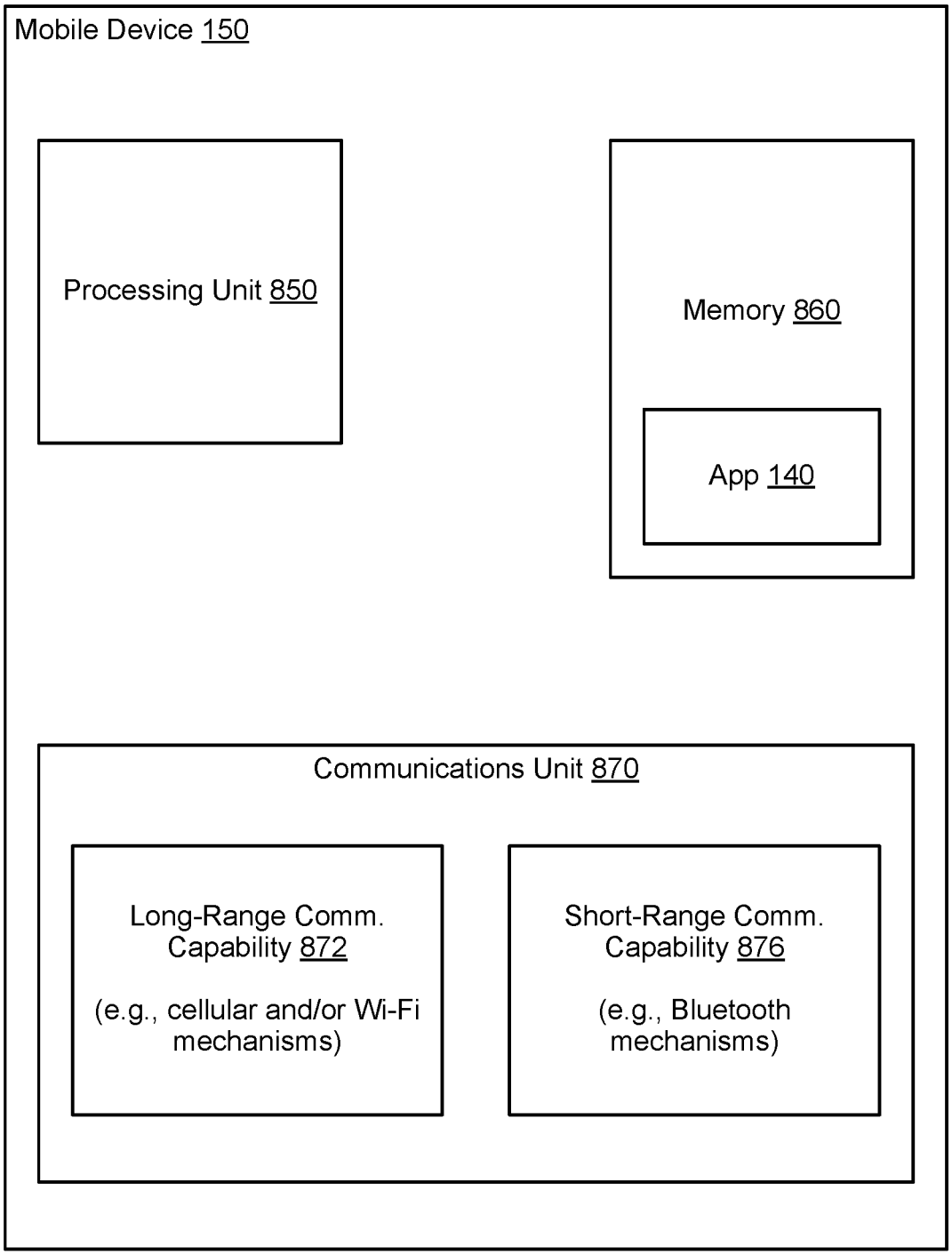
Mobile Device 150
Processing Unit 850
Memory 860
App 140
Communications Unit 870
Long-Range Comm. Capability 872
(e.g., cellular and/or Wi-Fi mechanisms)
Short-Range Comm. Capability 876
(e.g., Bluetooth mechanisms)

Figure 21

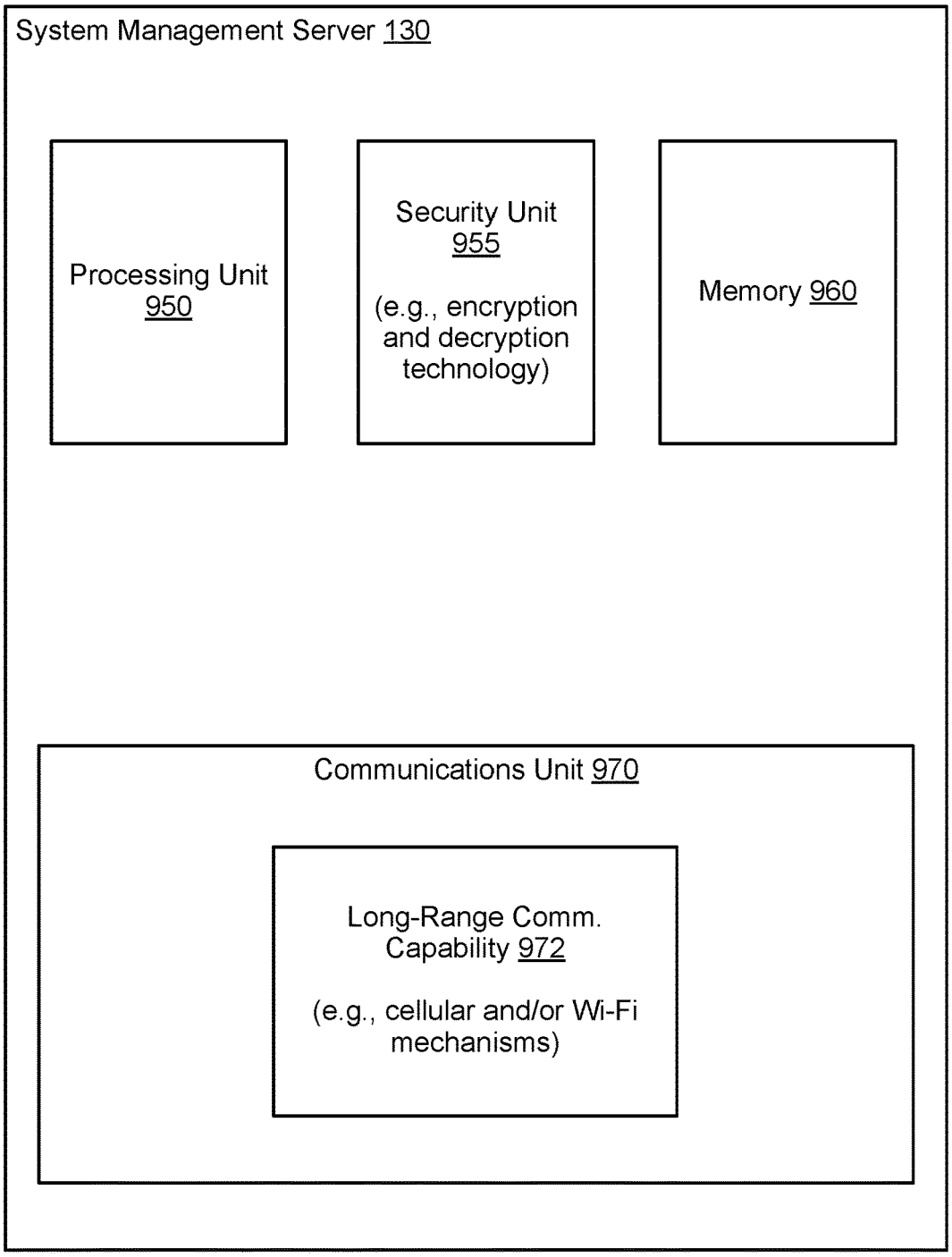
System Management Server 130
Processing Unit 950
Security Unit 955
(e.g., encryption and decryption technology)
Memory 960
Communications Unit 970
Long-Range Comm. Capability 972
(e.g., cellular and/or Wi-Fi mechanisms)

Figure 22

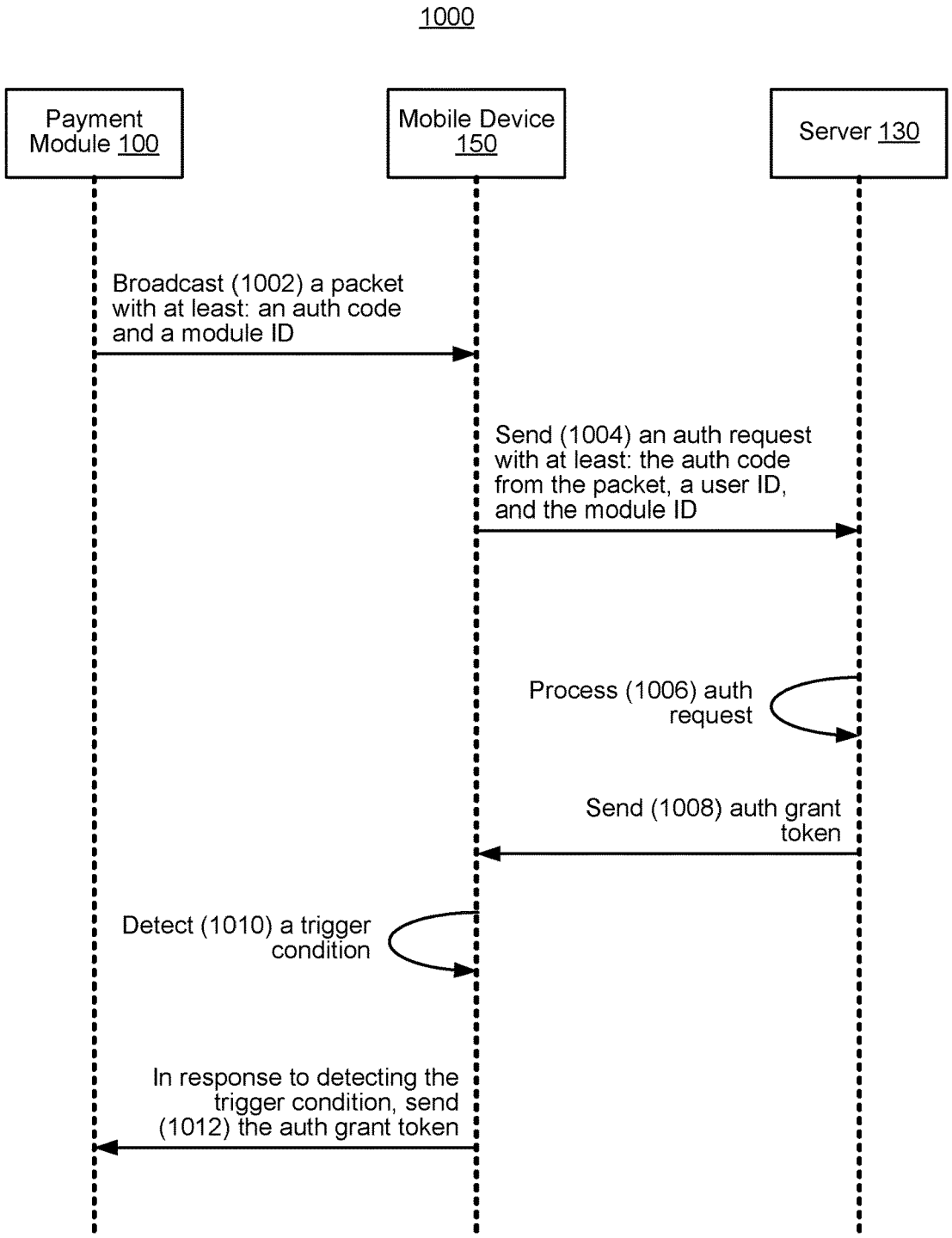
1000
Payment Module 100
Mobile Device 150
Server 130
Broadcast (1002) a packet with at least: an auth code and a module ID
Send (1004) an auth request with at least: the auth code from the packet, a user ID, and the module ID
Process (1006) auth request
Send (1008) auth grant token
Detect (1010) a trigger condition
In response to detecting the trigger condition, send (1012) the auth grant token

Figure 23

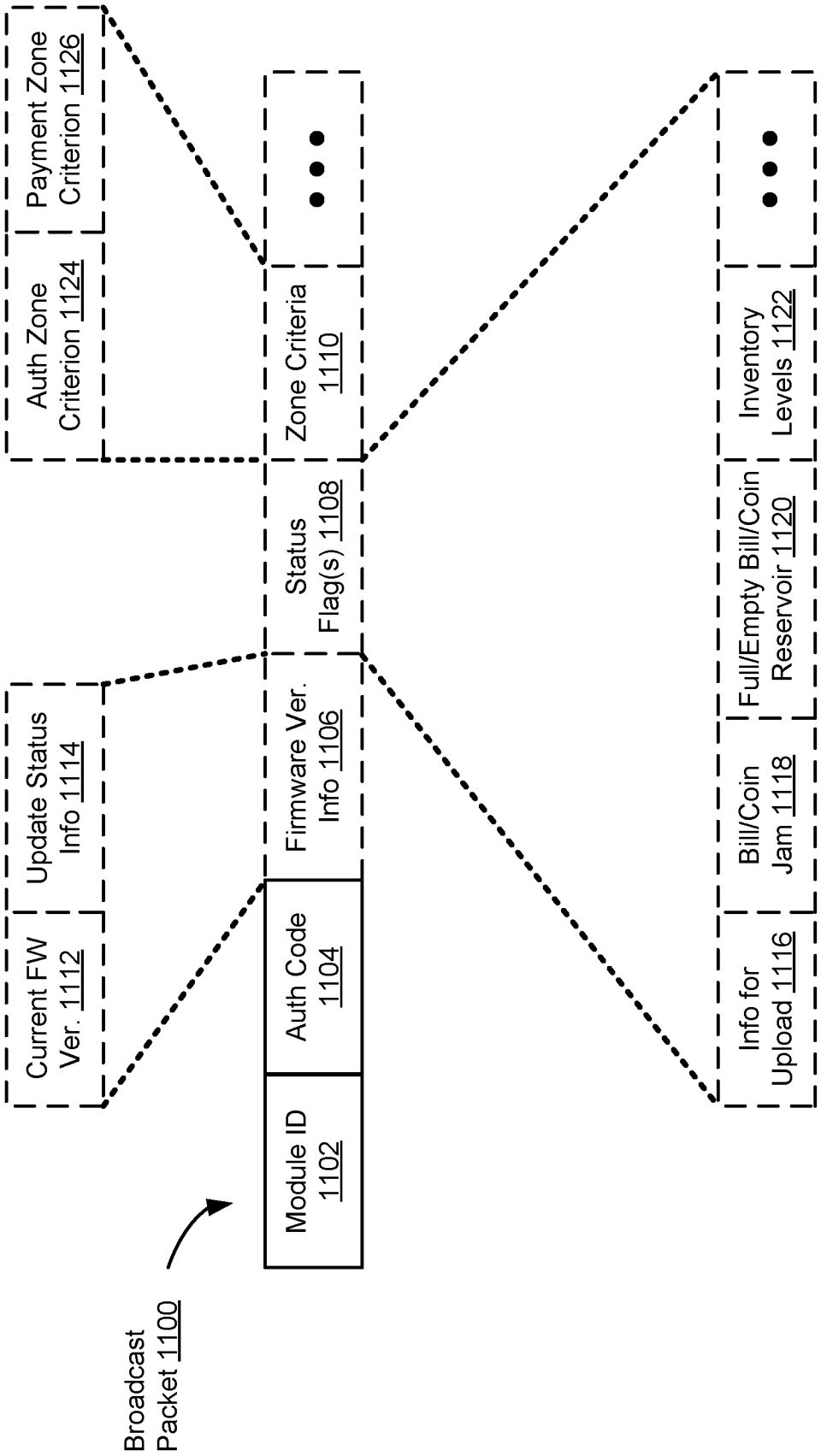
Broadcast Packet 1100
Module ID 1102
Auth Code 1104
Current FW Ver. 1112
Update Status Info 1114
Firmware Ver. Info 1106
Status Flag(s) 1108
Auth Zone Criterion 1124
Payment Zone Criterion 1126
Zone Criteria 1110
Info for Upload 1116
Bill/Coin Jam 1118
Full/Empty Bill/Coin Reservoir 1120
Inventory Levels 1122

Figure 24A

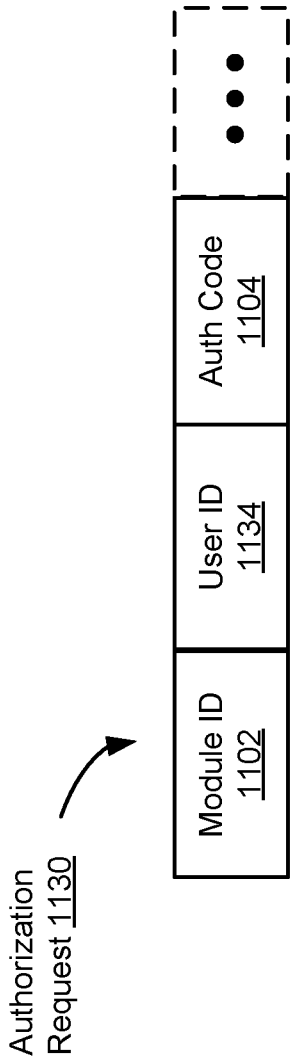

Figure 24B

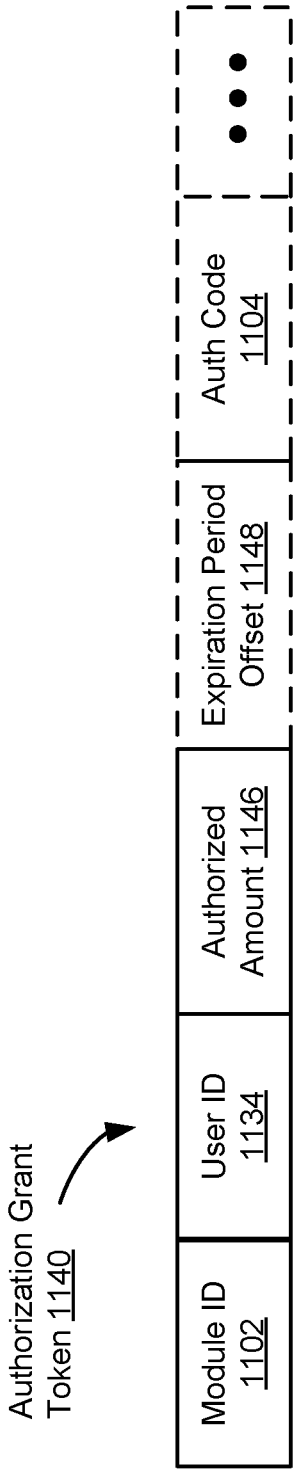

Figure 24C

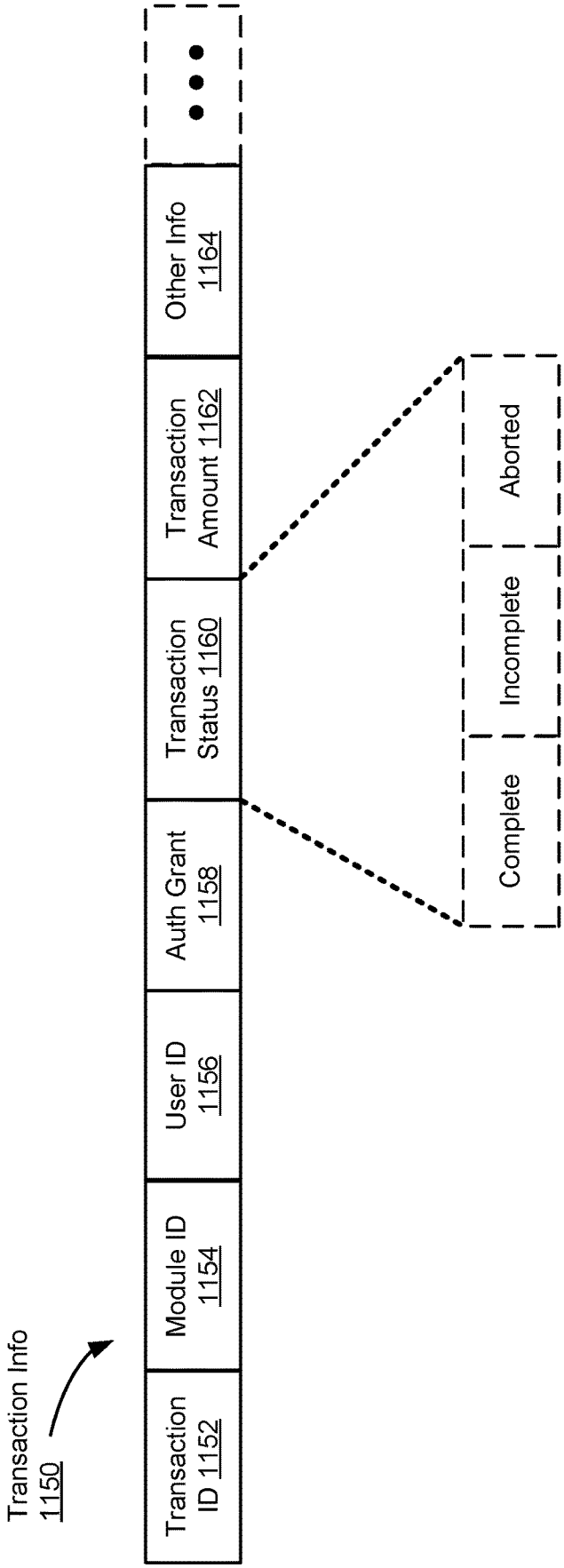
Transaction Info
1150
Transaction ID 1152
Module ID 1154
User ID 1156
Auth Grant 1158
Transaction Status 1160
Transaction Amount 1162
Other Info 1164
Complete
Incomplete
Aborted

Figure 24D

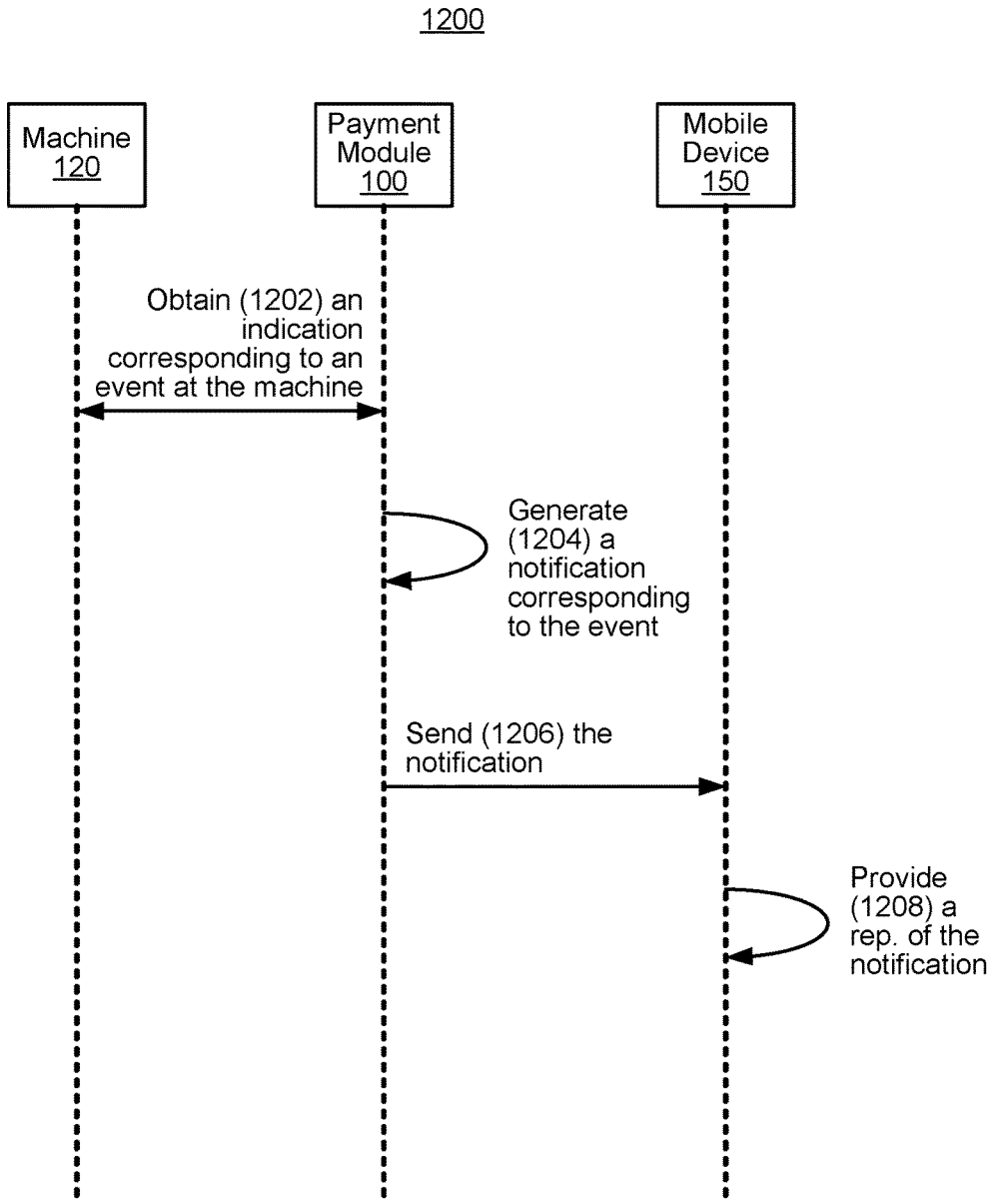
1200
Machine 120
Payment Module 100
Mobile Device 150
Obtain (1202) an indication corresponding to an event at the machine
Generate (1204) a notification corresponding to the event
Send (1206) the notification
Provide (1208) a rep. of the notification

Figure 25A

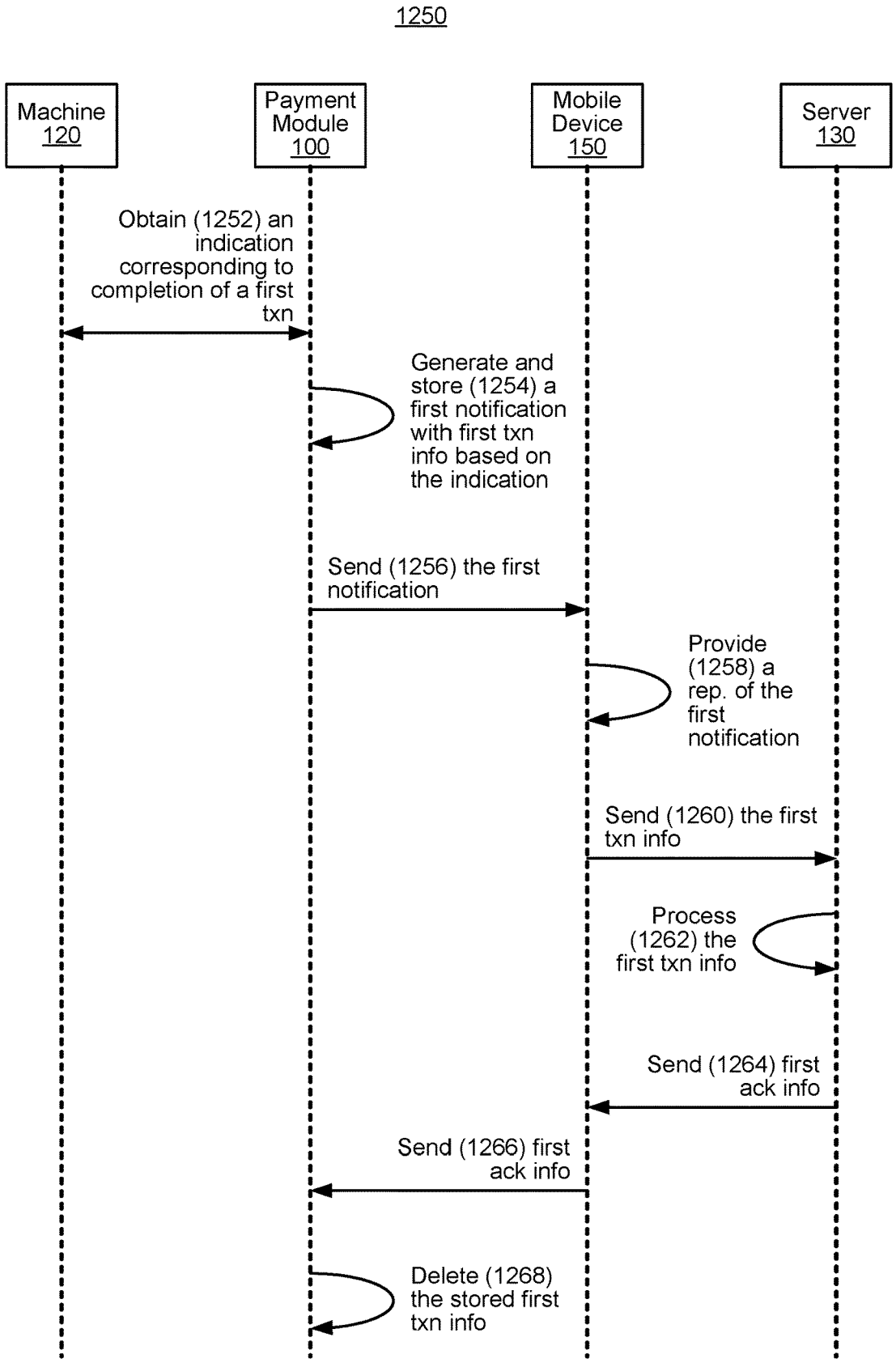
1250
Machine 120
Payment Module 100
Mobile Device 150
Server 130
Obtain (1252) an indication corresponding to completion of a first txn
Generate and store (1254) a first notification with first txn info based on the indication
Send (1256) the first notification
Provide (1258) a rep. of the first notification
Send (1260) the first txn info
Process (1262) the first txn info
Send (1264) first ack info
Send (1266) first ack info
Delete (1268) the stored first txn info

Figure 25B

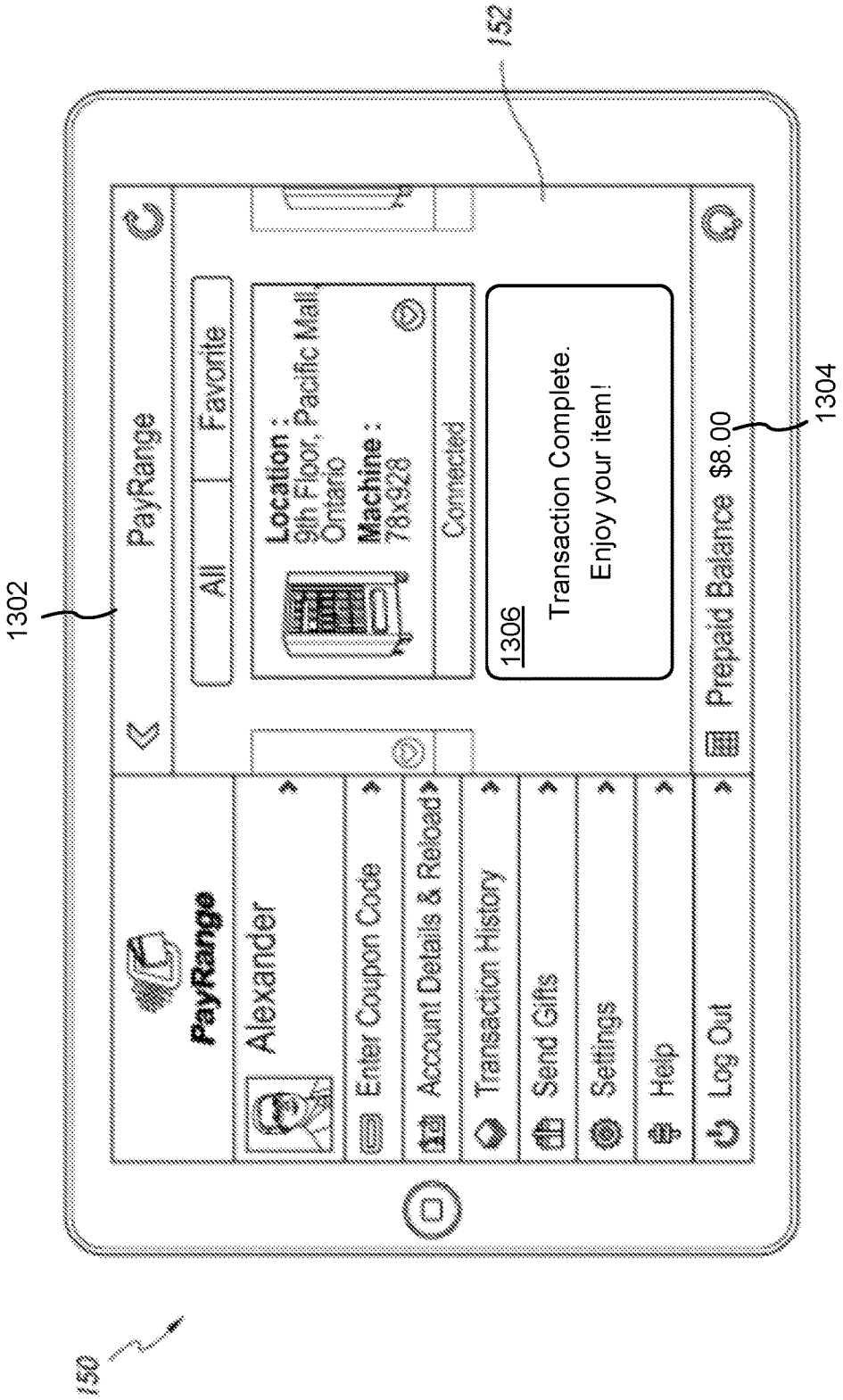
150
152
1302
1304
PayRange
Alexander
Enter Coupon Code
Account Details & Reload
Transaction History
Send Gifts
Settings
Help
Log Out
All
Favorite
Location : 9th Floor, Pacific Mall Ontario
Machine : 78x928
Connected
1306
Transaction Complete.
Enjoy your item!
Prepaid Balance $8.00

Figure 26A

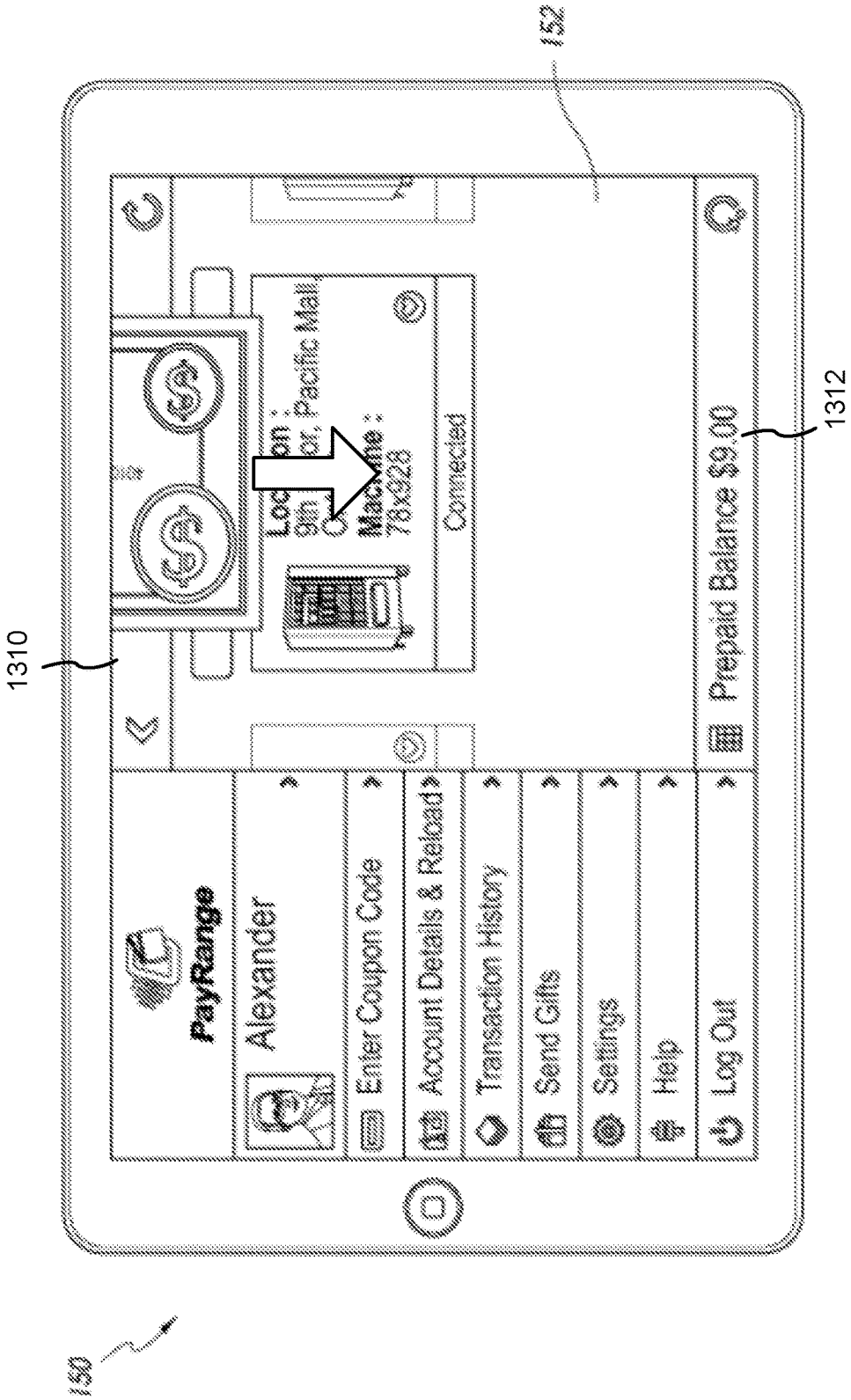
152
1310
1312
150
PayRange
Alexander
Enter Coupon Code
Account Details & Reload
Transaction History
Send Gifts
Settings
Help
Log Out
Prepaid Balance $9.00
Connected

Figure 26B

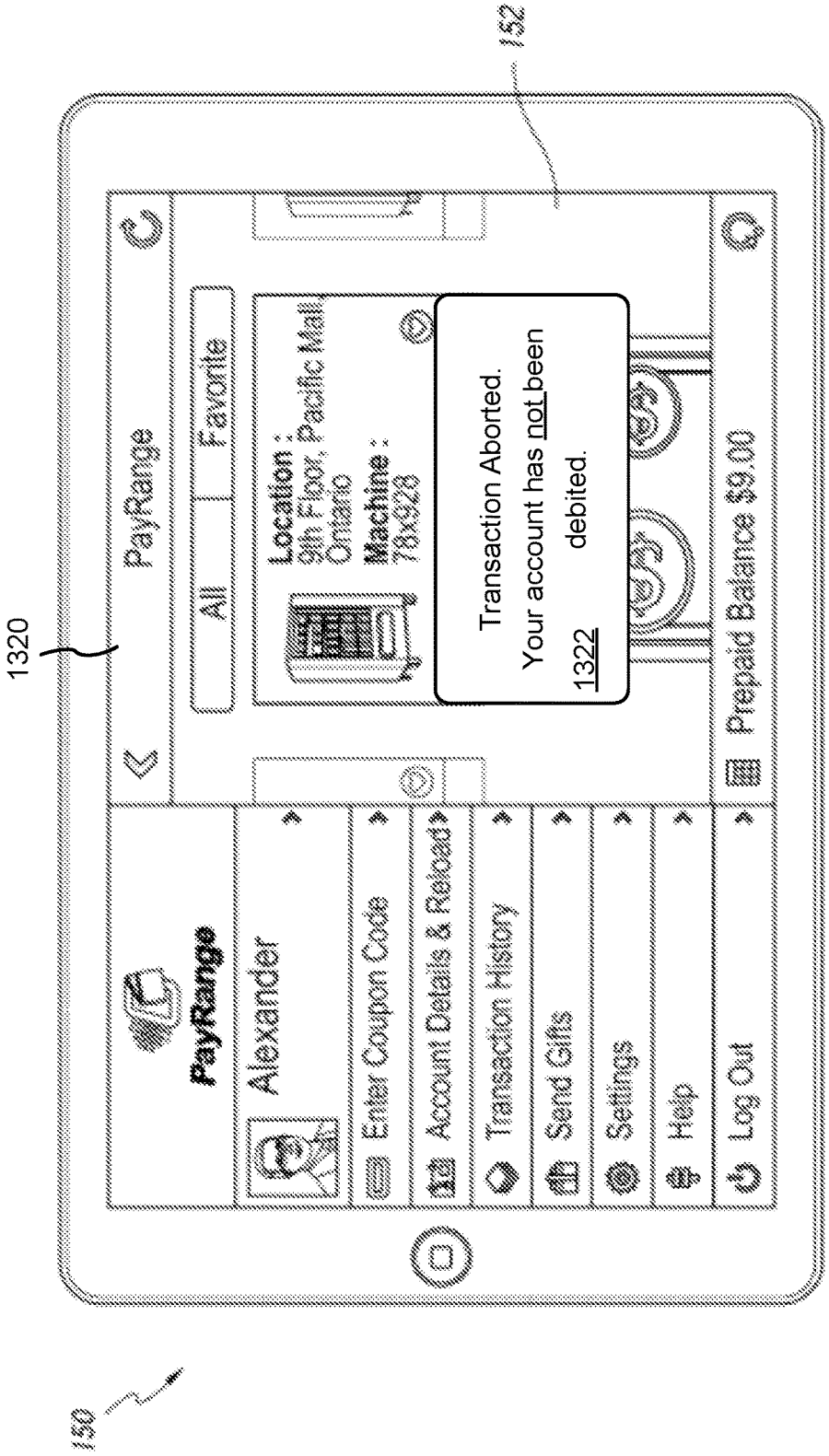
152
1320
150
PayRange
All
Favorite
Location :
9th Floor, Pacific Mall
Ontario
Machine :
78x928
Transaction Aborted.
Your account has not been
debited.
1322
Prepaid Balance $9.00
PayRange
Alexander
Enter Coupon Code
Account Details & Reload
Transaction History
Send Gifts
Settings
Help
Log Out

Figure 26C

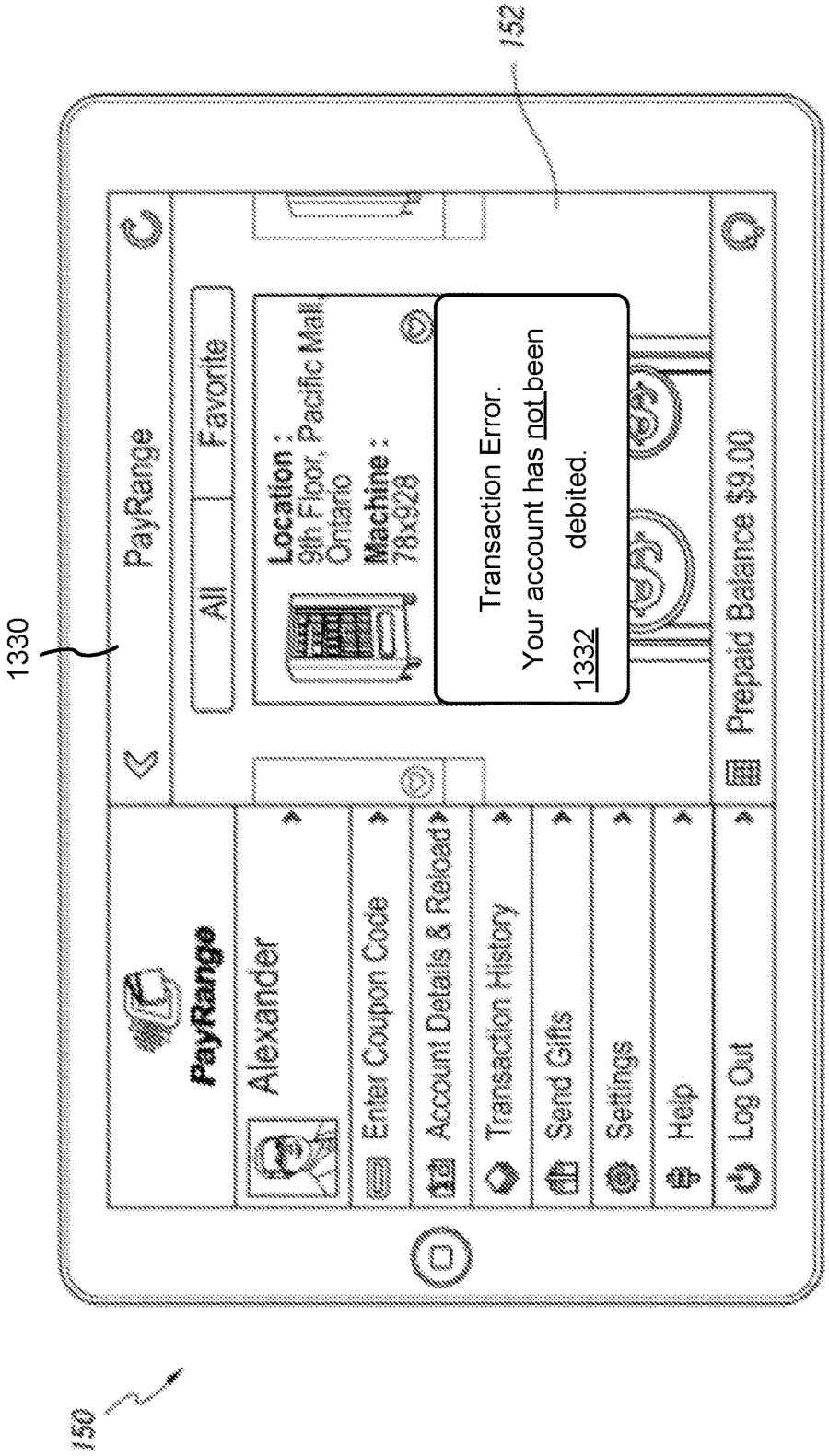
152
1330
PayRange
All
Favorite
Location :
9th Floor, Pacific Mall,
Ontario
Machine :
78x928
Transaction Error.
Your account has not been
debited.
1332
Prepaid Balance $9.00
PayRange
Alexander
Enter Coupon Code
Account Details & Reload
Transaction History
Send Gifts
Settings
Help
Log Out
150

Figure 26D

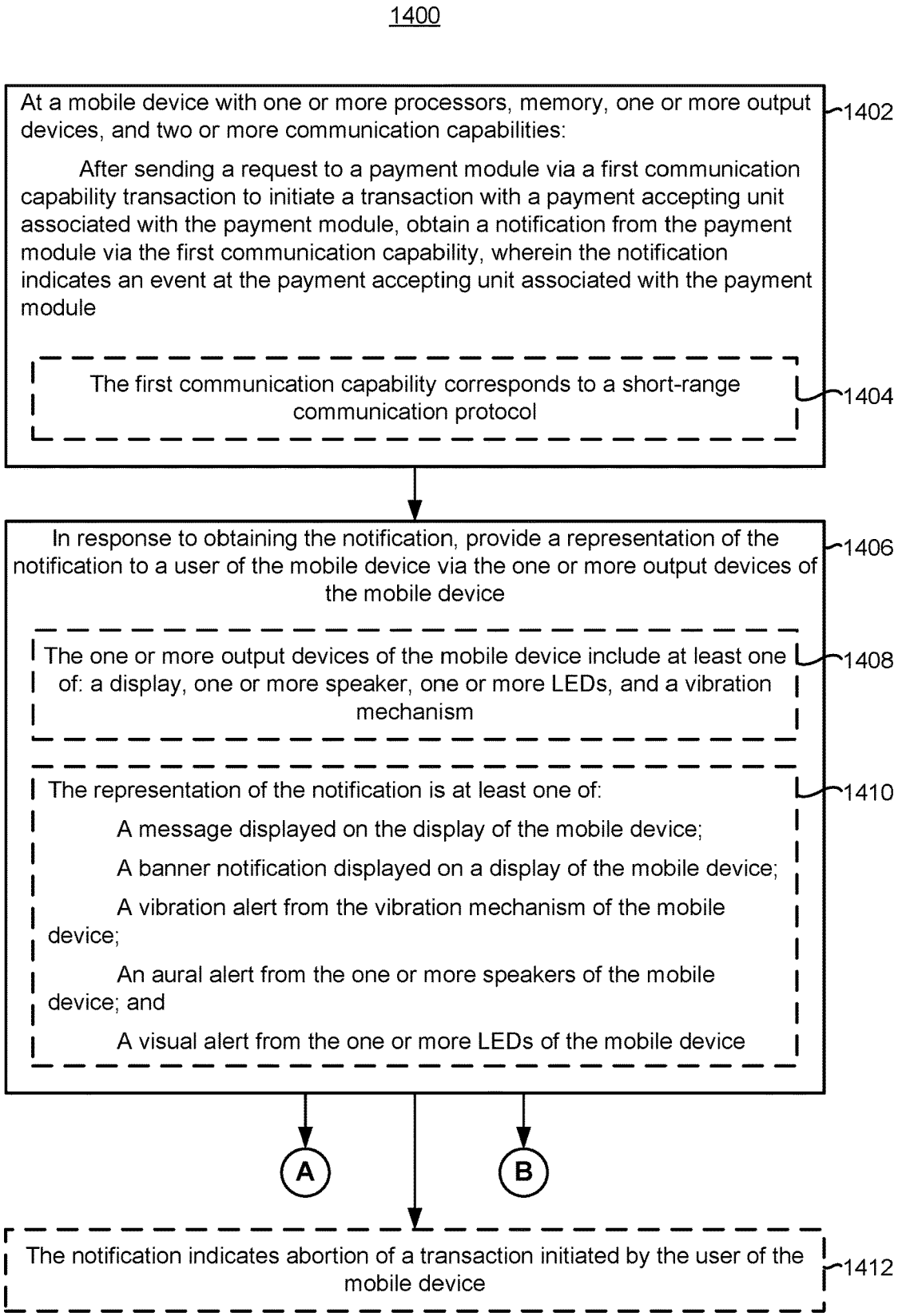
1400
At a mobile device with one or more processors, memory, one or more output devices, and two or more communication capabilities:
After sending a request to a payment module via a first communication capability transaction to initiate a transaction with a payment accepting unit associated with the payment module, obtain a notification from the payment module via the first communication capability, wherein the notification indicates an event at the payment accepting unit associated with the payment module
1402
The first communication capability corresponds to a short-range communication protocol
1404
In response to obtaining the notification, provide a representation of the notification to a user of the mobile device via the one or more output devices of the mobile device
1406
The one or more output devices of the mobile device include at least one of: a display, one or more speaker, one or more LEDs, and a vibration mechanism
1408
The representation of the notification is at least one of:
A message displayed on the display of the mobile device;
A banner notification displayed on a display of the mobile device;
A vibration alert from the vibration mechanism of the mobile device;
An aural alert from the one or more speakers of the mobile device; and
A visual alert from the one or more LEDs of the mobile device
1410
A
B
The notification indicates abortion of a transaction initiated by the user of the mobile device
1412

Figure 27A

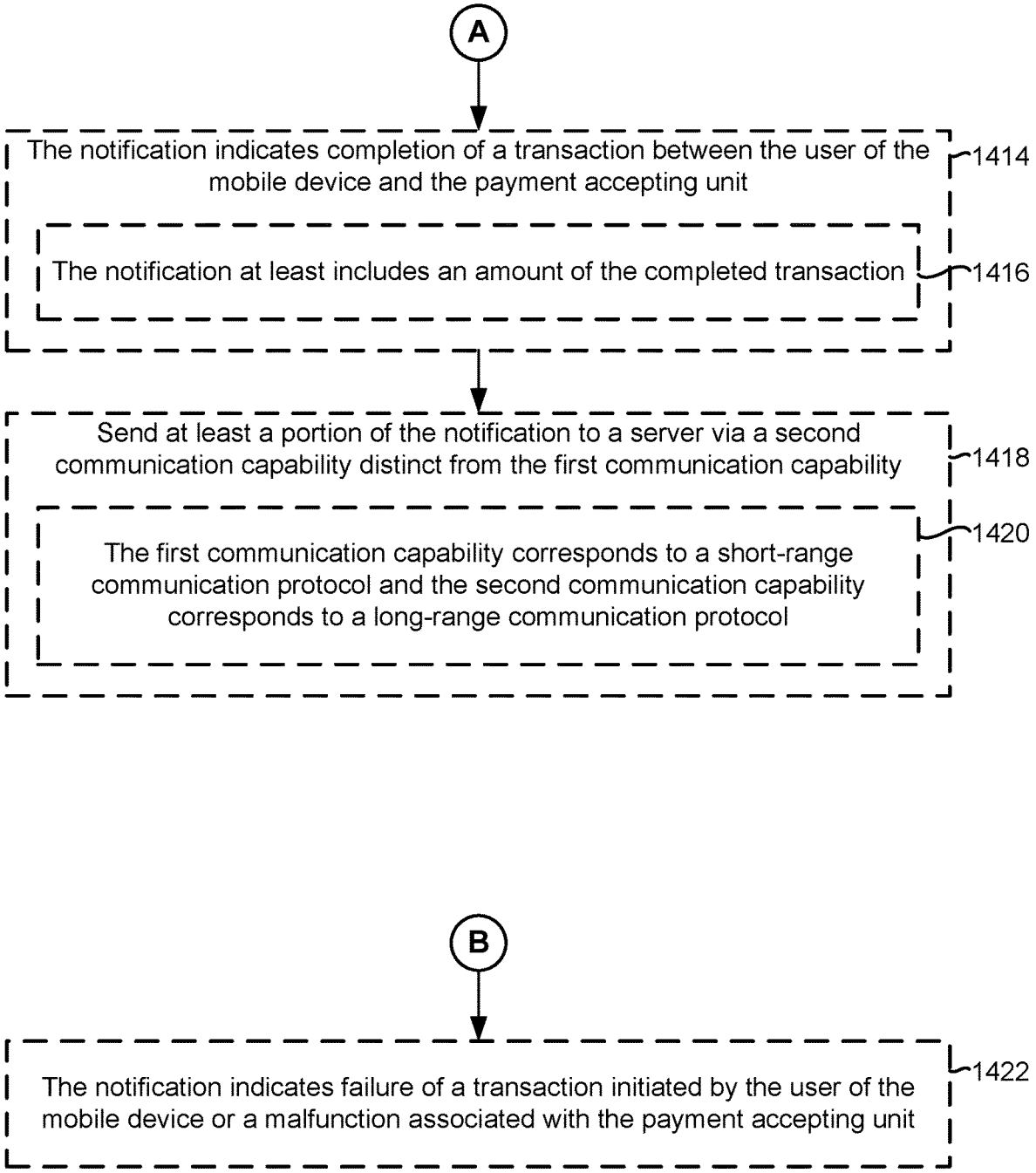
A
The notification indicates completion of a transaction between the user of the mobile device and the payment accepting unit
1414
The notification at least includes an amount of the completed transaction
1416
Send at least a portion of the notification to a server via a second communication capability distinct from the first communication capability
1418
The first communication capability corresponds to a short-range communication protocol and the second communication capability corresponds to a long-range communication protocol
1420
B
The notification indicates failure of a transaction initiated by the user of the mobile device or a malfunction associated with the payment accepting unit
1422

Figure 27B

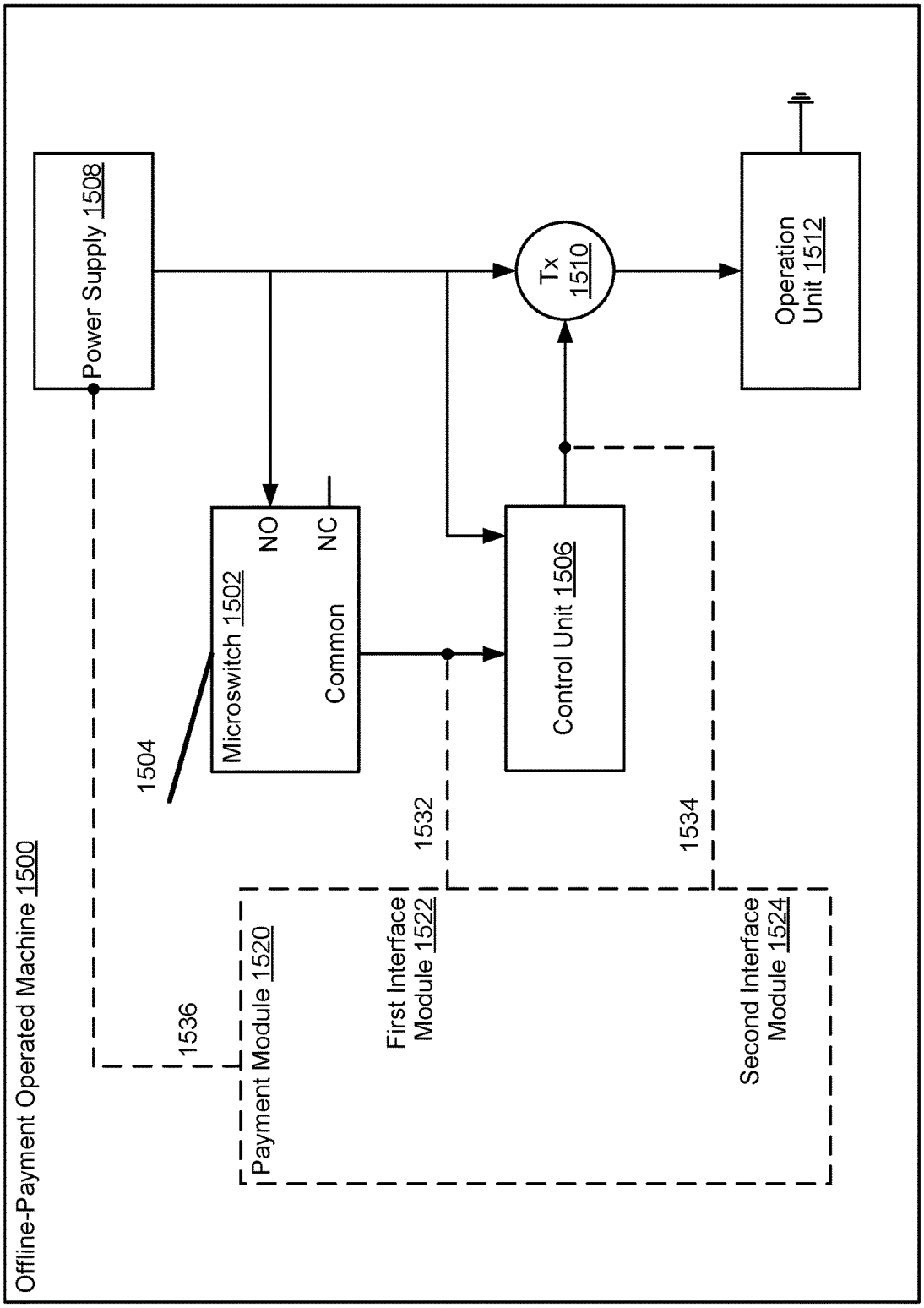
Offline-Payment Operated Machine 1500
Power Supply 1508
Microswitch 1502
NO
NC
Common
1504
Tx 1510
Control Unit 1506
Operation Unit 1512
1532
1534
1536
Payment Module 1520
First Interface Module 1522
Second Interface Module 1524

Figure 28A

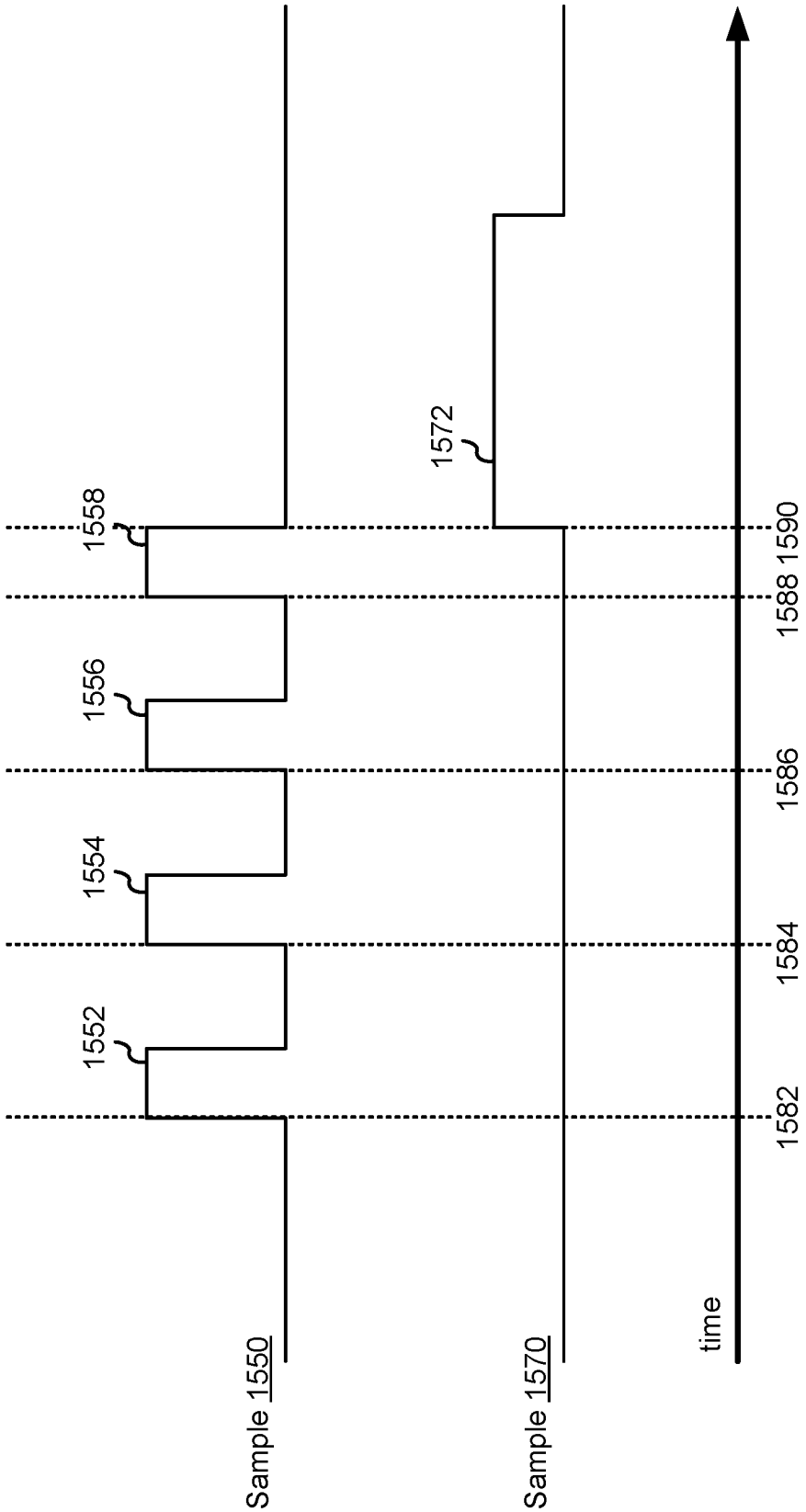
1552
1554
1556
1558
1572
Sample 1550
Sample 1570
time
1582
1584
1586
1588
1590

Figure 28B

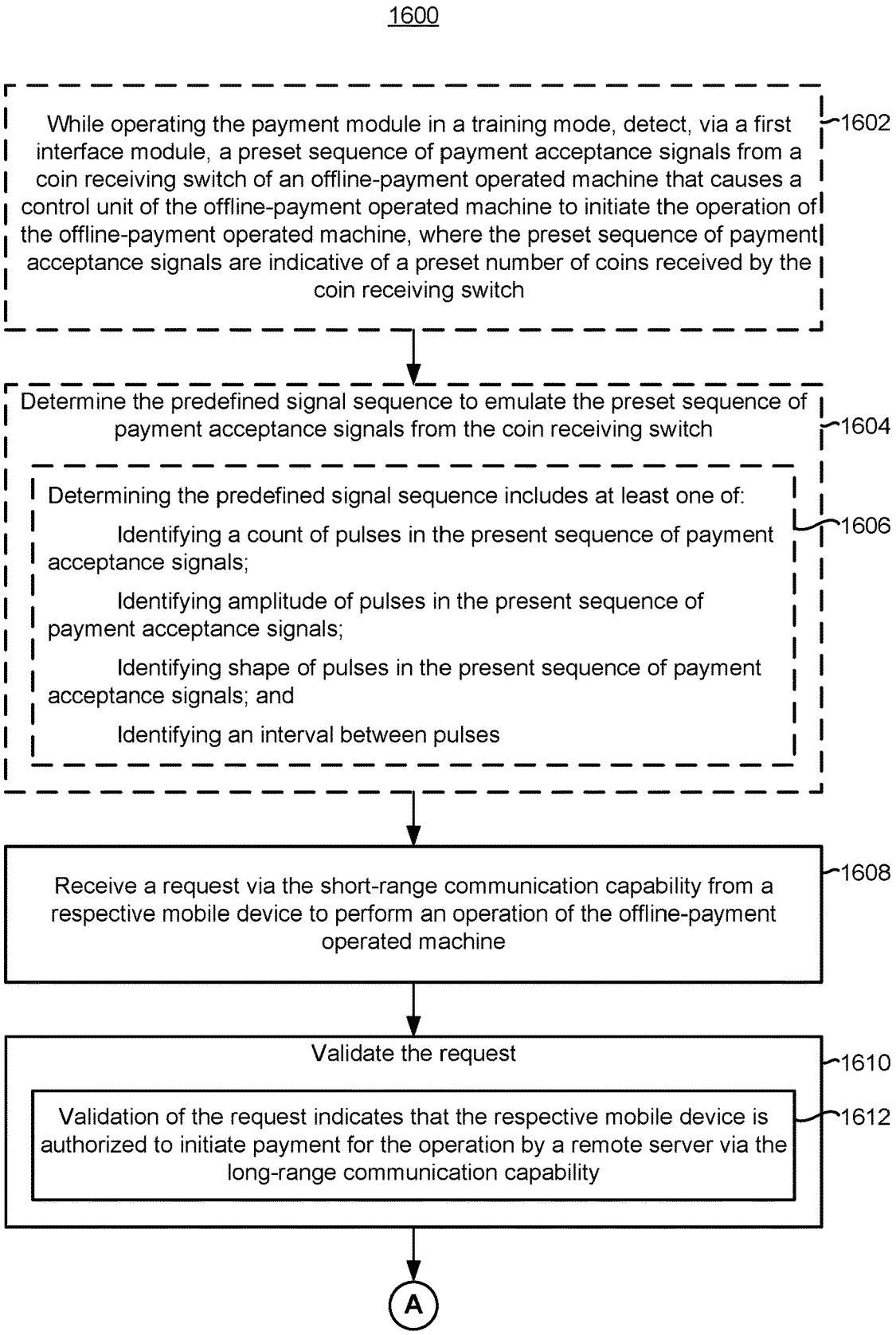
1600
While operating the payment module in a training mode, detect, via a first interface module, a preset sequence of payment acceptance signals from a coin receiving switch of an offline-payment operated machine that causes a control unit of the offline-payment operated machine to initiate the operation of the offline-payment operated machine, where the preset sequence of payment acceptance signals are indicative of a preset number of coins received by the coin receiving switch
1602
Determine the predefined signal sequence to emulate the preset sequence of payment acceptance signals from the coin receiving switch
1604
Determining the predefined signal sequence includes at least one of:
Identifying a count of pulses in the present sequence of payment acceptance signals;
Identifying amplitude of pulses in the present sequence of payment acceptance signals;
Identifying shape of pulses in the present sequence of payment acceptance signals; and
Identifying an interval between pulses
1606
Receive a request via the short-range communication capability from a respective mobile device to perform an operation of the offline-payment operated machine
1608
Validate the request
1610
Validation of the request indicates that the respective mobile device is authorized to initiate payment for the operation by a remote server via the long-range communication capability
1612
A

Figure 29A

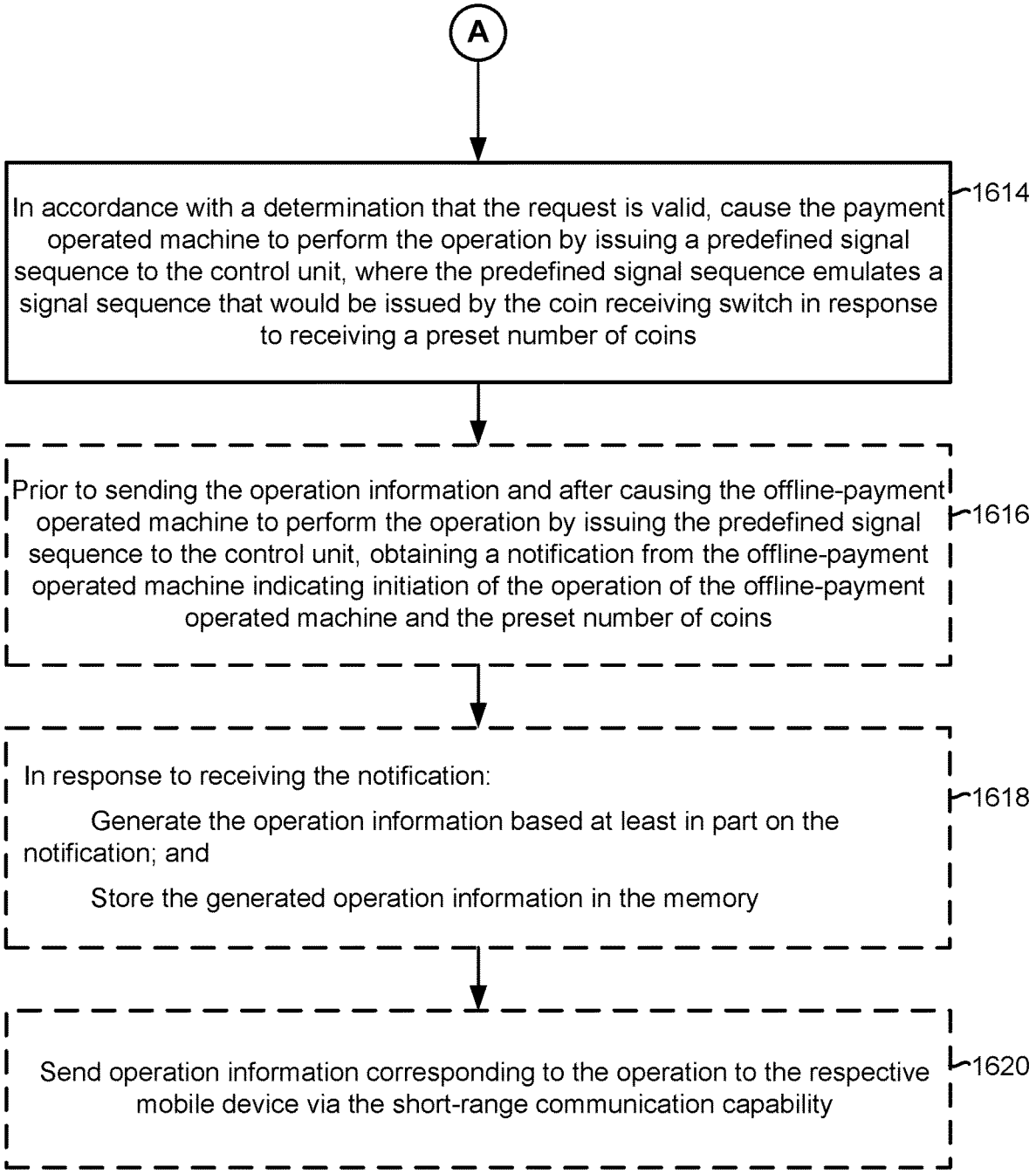
A
In accordance with a determination that the request is valid, cause the payment operated machine to perform the operation by issuing a predefined signal sequence to the control unit, where the predefined signal sequence emulates a signal sequence that would be issued by the coin receiving switch in response to receiving a preset number of coins
1614
Prior to sending the operation information and after causing the offline-payment operated machine to perform the operation by issuing the predefined signal sequence to the control unit, obtaining a notification from the offline-payment operated machine indicating initiation of the operation of the offline-payment operated machine and the preset number of coins
1616
In response to receiving the notification:
Generate the operation information based at least in part on the notification; and
Store the generated operation information in the memory
1618
Send operation information corresponding to the operation to the respective mobile device via the short-range communication capability
1620

Figure 29B

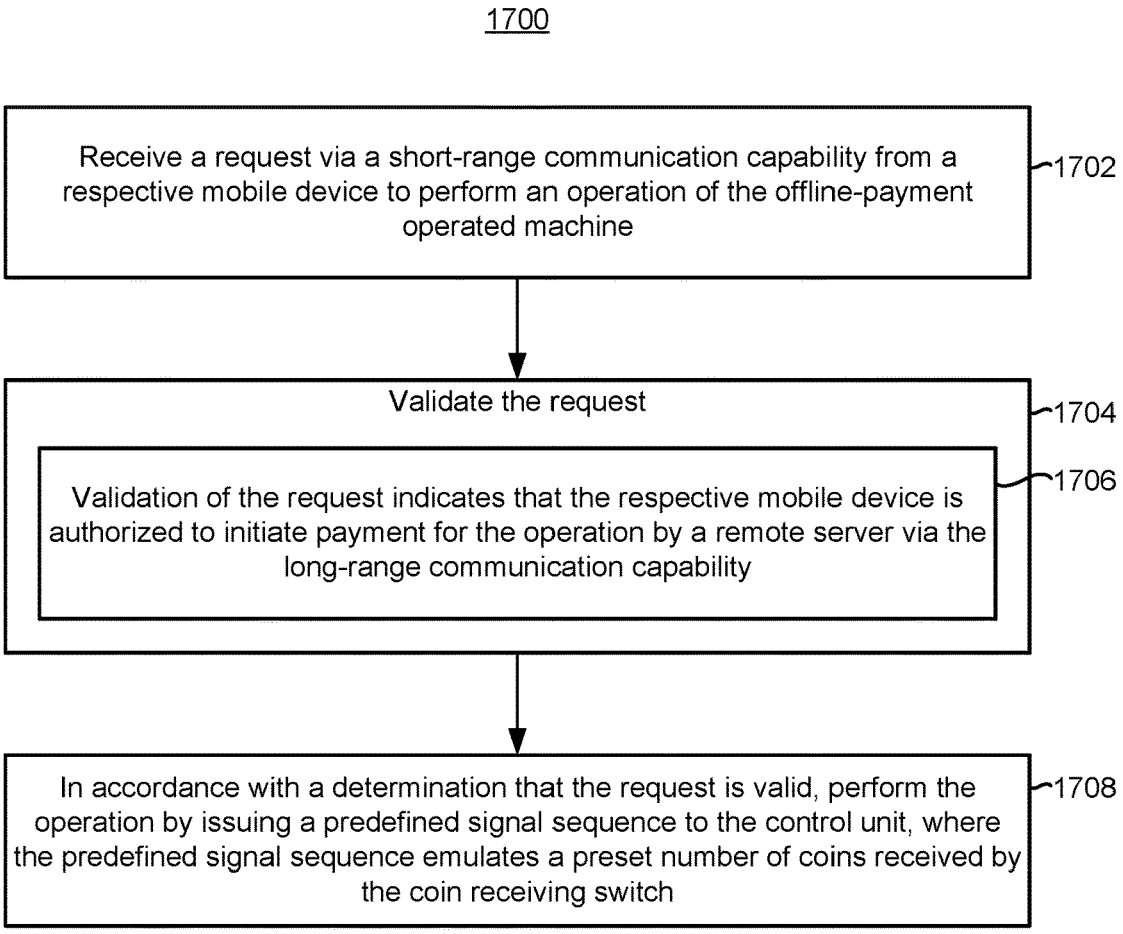
1700
Receive a request via a short-range communication capability from a respective mobile device to perform an operation of the offline-payment operated machine
1702
Validate the request
1704
Validation of the request indicates that the respective mobile device is authorized to initiate payment for the operation by a remote server via the long-range communication capability
1706
In accordance with a determination that the request is valid, perform the operation by issuing a predefined signal sequence to the control unit, where the predefined signal sequence emulates a preset number of coins received by the coin receiving switch
1708

Figure 30

METHOD AND SYSTEM FOR PRESENTING REPRESENTATIONS OF PAYMENT ACCEPTING UNIT EVENTS

PRIORITY CLAIM

The present application is a continuation of U.S. patent application Ser. No. 15/603,400, filed May 23, 2017 and set to issue as U.S. Pat. No. 10,891,614 on Jan. 12, 2021, which is a continuation of U.S. patent application Ser. No. 14/458,199, filed Aug. 12, 2014 and issued as U.S. Pat. No. 9,659,296 on May 23, 2017, which is a continuation-in-part of U.S. patent application Ser. No. 14/456,683, filed Aug. 11, 2014 and issued as U.S. Pat. No. 9,256,873 on Feb. 9, 2016, which is a continuation of U.S. patent application Ser. No. 14/335,762, filed Jul. 18, 2014 and issued as U.S. Pat. No. 9,547,859 on Jan. 17, 2017, which is a continuation of U.S. patent application Ser. No. 14/214,644, filed Mar. 14, 2014 and issued as U.S. Pat. No. 8,856,045 on Oct. 7, 2014, which claims priority to U.S. Provisional Patent Application Ser. No. 61/917,936, filed Dec. 18, 2013. U.S. patent application Ser. No. 14/214,644, filed Mar. 14, 2014, is also a continuation-in-part of U.S. Design patent application Ser. No. 29/477,025, filed Dec. 18, 2013 and issued as U.S. Design Pat. No. D755,183 on May 3, 2016. The present application is based on and claims priority to these applications, the disclosures of which are hereby expressly incorporated herein by reference.

FIELD OF THE INVENTION

The present application relates to the field of payment processing systems, and in particular, to a mobile-device-to-machine payment processing system over a non-persistent network connection.

BACKGROUND OF THE INVENTION

Vending machines (or "automatic retailing" machines), in the broadest sense, have been around for thousands of years. The first simple mechanical coin operated vending machines were introduced in the 1880s. Modern vending machines stock many different types of products including, but not limited to drinks (e.g., water, juice, coffee, and soda) and edible food products/items (e.g., snacks, candy, fruit, and frozen meals), as well as a wide variety of non-food items. In this fast paced world, vending machines are ubiquitous.

Vending machines are one type of "payment accepting unit" (payment accepting units are also referred to herein generically as "machines"). A payment accepting unit (or machine) is equipment that requires payment for the dispensing of products and/or services. In addition to vending machines, payment accepting units can also be other machines that require payment for the dispensing of a product and/or services including, but not limited to parking meters, toll booths, laundromat washers and dryers, arcade games, kiosks, photo booths, toll booths, transit ticket dispensing machines, and other known or yet to be discovered payment accepting units.

In using a payment accepting unit, a user will (1) approach the payment accepting unit, (2) determine from the face of the payment accepting unit the product (or service) he/she desires, (3) insert payment (e.g., coins, bills, or payment cards), and (4) input his/her selection into the payment accepting unit using a user interface (e.g., a series of buttons, a key pad, touch screen, or other input mechanism using, for example, the column and row at which a product is located). Based on the user's inputted selection, technology within the payment accepting unit provides the desired product (or service) to the user.

As the number of people with Internet-connected mobile devices proliferates, so does the variety of uses for such devices. Mobile payment is a logical extension. There is a large development effort around bringing mobile payment to the retail sector in an effort to not only provide options to the user, but also increased convenience.

SUMMARY

Disclosed herein is a payment processing system or, more specifically, a mobile-device-to-machine payment processing system over a non-persistent network connection with hands-free mode and manual mode (sometimes also herein called "swipe" or "swipe-to-pay" mode).

In some implementations, a method of presenting representations of payment accepting unit events is performed at a device (e.g., the mobile device **150**, FIGS. **5** and **21**) with one or more processors, memory, one or more output devices, and two or more communication capabilities. After sending a request to a payment module (e.g., the adapter module **100**, FIGS. **5** and **20**), via a first communication capability (e.g., a short-range communication technology/protocol such as BLE), to initiate a transaction with a payment accepting unit (e.g., the payment accepting unit **120**, FIGS. **5** and **19**) (sometimes also herein called "machine **120**") associated with the payment module, the method includes obtaining a notification from the payment module via the first communication capability, where the notification indicates an event at the payment accepting unit associated with the payment module. In response to obtaining the notification, the method includes providing a representation of the notification to a user of the mobile device via the one or more output devices of the mobile device (e.g., a message displayed on a display of the mobile device, a vibration produced by a vibration mechanism of the mobile device, an aural alert produced by a speaker of the mobile device, and/or the like).

In some implementations, a method of retrofitting an offline-payment operated machine to accept electronic payments is performed at a payment module (e.g., the adapter module **100**, FIGS. **5** and **20**) with one or more processors, memory, a short-range communication capability (e.g., a short-range communication technology/protocol such as BLE), and a first interface module configured to couple the payment module with a control unit of an offline-payment operated machine (e.g., the payment accepting unit **120**, FIGS. **5** and **19**) (sometimes also herein called "machine **120**"). The method includes receiving a transaction request via the short-range communication capability from a respective mobile device to perform a transaction with the offline-payment operated machine. The method includes validating the transaction request, where validation of the transaction request indicates that the respective mobile device is authorized to initiate payment for the transaction by a remote server (e.g., the server **130**, FIGS. **5** and **22**) via the long-range communication capability (e.g., the long-range communication technology/protocol such as GSM, CDMA, or Wi-Fi). In accordance with a determination that the transaction request is valid, the method includes causing the offline-payment operated machine to perform the requested transaction by issuing a signal to perform the transaction to the control unit of the offline-payment operated machine via the first interface module.

In some implementations, a device (e.g., the machine **120**, (FIGS. **5** and **19**), the adapter module **100** (FIGS. **5** and **20**), the mobile device **150** (FIGS. **5** and **21**), the server **130** (FIGS. **5** and **22**), or a combination thereof) includes one or more processors and memory storing one or more programs for execution by the one or more processors, the one or more programs include instructions for performing, or controlling performance of, the operations of any of the methods described herein. In some implementations, a non-transitory computer readable storage medium storing one or more programs, the one or more programs comprising instructions, which, when executed by a device (e.g., the machine **120**, (FIGS. **5** and **19**), the adapter module **100** (FIGS. **5** and **20**), the mobile device **150** (FIGS. **5** and **21**), the server **130** (FIGS. **5** and **22**), or a combination thereof) with one or more processors, cause the computer system to perform, or control performance of, the operations of any of the methods described herein. In some implementations, a device (e.g., the machine **120**, (FIGS. **5** and **19**), the adapter module **100** (FIGS. **5** and **20**), the mobile device **150** (FIGS. **5** and **21**), the server **130** (FIGS. **5** and **22**), or a combination thereof) includes means for performing, or controlling performance of, the operations of any of the methods described herein.

The subject matter described herein is particularly pointed out and distinctly claimed in the concluding portion of this specification. Objectives, features, combinations, and advantages described and implied herein will be more readily understood upon consideration of the following detailed description of the invention, taken in conjunction with the accompanying drawings.

BRIEF DESCRIPTION OF THE DRAWINGS

FIG. **1** is a schematic diagram that shows three zones: a "communication zone" (e.g., Bluetooth range), an "authorization zone," and a "payment zone" in accordance with some implementations.

FIG. **2** is a schematic diagram that shows the three zones of FIG. **1** with multiple users therein in accordance with some implementations.

FIG. **3** is a table that illustrates the hands-free credit or alert user principle in accordance with some implementations.

FIG. **4** is a flow chart showing the logging received signal strength indicator (RSSI) information in accordance with some implementations.

FIG. **5** is a block schematic that shows elements of the payment processing system including, but not limited to, the adapter module, the machine, the mobile device, and servers, as well as communications therebetween in accordance with some implementations.

FIG. **6** is a block schematic that shows three areas of encryption used (each is bi-directional) between the adapter module, the machine, the mobile device, and/or servers in accordance with some implementations.

FIG. **7** is a block diagram that shows communications, messaging, vending sequence, and purchase flow between the adapter module, the mobile device, and a system management server in accordance with some implementations.

FIG. **8**A is a schematic process flow diagram that shows additional elements and features of the payment processing system (e.g., communications, messaging, vending sequence, and purchase flow) when the user enters the "communication zone" (e.g., Bluetooth range) in accordance with some implementations.

FIG. **8**B is a schematic process flow diagram that shows additional elements and features of the payment processing system (e.g., communications, messaging, vending sequence, and purchase flow) when the user enters the "authorization zone" in accordance with some implementations.

FIG. **8**C is a schematic process flow diagram that shows additional elements and features of the payment processing system (e.g., communications, messaging, vending sequence, and purchase flow) when the user enters the "payment zone" and, in particular, detailing a hands-free mode embodiment and a swipe mode embodiment in accordance with some implementations.

FIG. **8**D is a schematic process flow diagram that shows additional elements and features of the payment processing system (e.g., communications, messaging, vending sequence, and purchase flow) in a vending transaction including a loop for multiple transactions in accordance with some implementations.

FIG. **8**E is a schematic process flow diagram that shows additional elements and features of the payment processing system (e.g., communications, messaging, vending sequence, and purchase flow) in the login mode in accordance with some implementations.

FIG. **8**F is a schematic process flow diagram that shows additional elements and features of the payment processing system (e.g., communications, messaging, vending sequence, and purchase flow) during boot-up of the adapter module in accordance with some implementations.

FIG. **8**G is a schematic process flow diagram that shows additional elements and features of the payment processing system (e.g., communications, messaging, vending sequence, and purchase flow) during an account check/update process in accordance with some implementations.

FIGS. **9**A-**9**E are flow charts that show example steps and features of the payment processing system (e.g., communications, messaging, vending sequence, and purchase flow) in accordance with some implementations.

FIGS. **10**A-**10**D show a mobile device with a graphical representation of a mobile application shown thereon, the mobile application being used as part of the mobile-device-to-machine payment processing system in accordance with some implementations.

FIG. **11** is a perspective view of the in-line dongle adapter module in accordance with some implementations.

FIG. **12** is a front plan view of the in-line dongle adapter module of FIG. **11** in accordance with some implementations.

FIG. **13** is a back plan view of the in-line dongle adapter module of FIG. **11** in accordance with some implementations.

FIG. **14** is a side view of the in-line dongle adapter module of FIG. **11** in accordance with some implementations.

FIG. **15** is a first end view of a connector receptacle of the in-line dongle adapter module of FIG. **11** in accordance with some implementations.

FIG. **16** is a second end view of a connector receptacle of the in-line dongle adapter module of FIG. **11** in accordance with some implementations.

FIG. **17** is a perspective view taken from the first end of the in-line dongle adapter module of FIG. **11**, the connectors and cables between which the in-line dongle adapter module is inserted being shown in broken lines for illustrative purposes in accordance with some implementations.

FIG. **18** is a perspective view taken from the second end of the in-line dongle adapter module of FIG. **11**, the connectors and cables between which the in-line dongle adapter

module is inserted being shown in broken lines for illustrative purposes in accordance with some implementations.

FIG. **19** is a perspective view of the in-line dongle adapter module of FIG. **11** within a vending machine in accordance with some implementations.

FIG. **20** is a block diagram of an adapter module in accordance with some implementations.

FIG. **21** is a block diagram of a mobile device in accordance with some implementations.

FIG. **22** is a block diagram of a server in accordance with some implementations.

FIG. **23** is a schematic flow diagram of a process for authenticating a user to perform a transaction in the payment processing system in accordance with some implementations.

FIG. **24**A is a block diagram of a packet of information broadcast by the payment module (sometimes also herein called the "adapter module") in accordance with some implementations.

FIG. **24**B is a block diagram of an authorization request in accordance with some implementations.

FIG. **24**C is a block diagram of an authorization grant token in accordance with some implementations.

FIG. **24**D is a block diagram of transaction information generated by the payment module in accordance with some implementations.

FIG. **25**A illustrates a schematic flow diagram of a process for providing a representation of a machine event at a mobile device in accordance with some implementations

FIG. **25**B is a schematic flow diagram of a process for processing acknowledgment information in the payment processing system in accordance with some implementations.

FIGS. **26**A-**26**D illustrate example user interfaces for providing a representation of a machine event at a mobile device in accordance with some implementations.

FIGS. **27**A-**27**B illustrate a flowchart diagram of a method of presenting representations of payment accepting unit events in accordance with some implementations.

FIG. **28**A illustrates a block diagram of an offline-payment operated machine in accordance with some implementations.

FIG. **28**B illustrates signals sampled by the payment module in accordance with some implementations.

FIGS. **29**A-**29**B illustrate a flowchart diagram of a method **1600** of retrofitting an offline-payment operated machine to accept electronic payments in accordance with some implementations.

FIG. **30** illustrates a flowchart diagram of a method of enabling a payment operated machine to accept electronic payments in accordance with some implementations.

Like reference numerals refer to corresponding parts throughout the several views of the drawings.

DETAILED DESCRIPTION OF THE INVENTION

Disclosed herein is a payment processing system or, more specifically, a mobile-device-to-machine payment processing system for processing transactions over a non-persistent network connection. The mobile-device-to-machine payment processing system disclosed herein focuses on the unattended retail space (e.g., a payment accepting unit **120**, sometimes also herein called a "machine **120**"). More specifically, the mobile-device-to-machine payment processing system disclosed herein allows a user (having a mobile device **150** with a mobile application **140** thereon) to make a cashless purchase from a payment accepting unit **120** (having an adapter module **100** associated therewith).

The mobile-device-to-machine payment processing system described herein can be implemented with one or more of the following features: easy installation feature, a non-persistent network connection feature; a manual (swipe to pay) mode feature; a hands-free mode feature; and a multiple vending transactions (multi-vend) feature.

Easy Installation: Installation is very easy, requires no tools, requires no configuration, and takes as little as 30 seconds. This is accomplished by using an adapter module **100** (sometimes also herein called "payment module **100**") such as an in-line dongle (a hardware device with software thereon) design for in-line insertion within a multi-drop bus (MDB) of a payment accepting unit **120** (e.g., a vending machine) (sometimes also herein called "the machine **120**"). Installation is as simple as "powering down" (turning off) the machine **120**, identifying the "wire" that connects with a payment receiving mechanism (e.g., the coin mechanism), disconnecting the wire (so that there are two loose ends, such as a male connection end or adapter of an MDB and a female connection end or adapter of an MDB), plugging (inserting) the adapter module **100** in serial ("in-line") with the wire (e.g., connecting the MDB female adapter to a male adapter of the adapter module **100** and connecting the MDB male adapter to a female adapter of the adapter module **100**), tucking the wire and the installed adapter module **100** back into position, and "powering up" (turning on) the machine **120**. Most vending machines made since **1995** have this industry standard MDB technology that would allow this easy 30-second installation. On machines without MDB technology, the adapter module **100** can be configured or designed to work with other serial protocols or activate a switch. In essence the adapter module **100** simulates establishing payment on payment accepting unit **120** in much the same manner as other alternative forms of payment (e.g., cash).

Non-persistent Network Connection: Although payment accepting units (or "machines") that accept only cash (e.g., paper currency and coins) may not require a connection (persistent or non-persistent) to a network, traditional payment accepting units that accept cashless payments (e.g., credit cards, debit cards, and alternative mobile device payment methods using, for example, smart phones) require a persistent connection to a network (wired or wireless) to facilitate the cashless payments. In other words, without a persistent (ongoing or accessible on demand) network connection, traditional payment accepting units cannot accept cashless payments. Most traditional payment accepting units that accept cashless payments include the technology to accomplish this persistent network connection that allows them to connect to a remote server. If the network connection to a traditional machine is temporarily interrupted, cashless payments will be temporarily unavailable. If the machine is located in a location where no network connection is available, cashless payments is not possible. In addition to using a mobile device **150** as an intermediary between the payment accepting units **120** and the server **130**, the mobile-device-to-machine payment processing system described herein minimizes (i.e., the manual mode) or eliminates (i.e., the hands-free mode) user interaction with the mobile device **150**. Further, in some implementations, the mobile-device-to-machine payment processing system described herein facilitates the acceptance of cashless payments without requiring any network connection near the payment accepting unit **120**. In some implementations, when the mobile-device-to-machine payment processing system

described herein is located in a remote location where network connection is unavailable, the mobile-device-to-machine payment processing system, therefore, can still accept cashless payments.

Manual (Swipe-to-Pay) Mode: Using a "swipe-to-pay" feature (or just "swipe") refers to a user's action implemented on his/her mobile device **150** where he/she quickly brushes his/her finger (or other pre-determined interaction) on the mobile device's touch screen **152** (FIGS. **10**A-**10**D) or other input devices associated with the mobile device **150**. From the user's perspective, when the user is within range, a pre-installed mobile application **140** automatically connects to the payment accepting unit **120** (e.g., a vending machine). The mobile application **140** might display (on the touch screen **152**) a prepaid balance that the user "swipes" to transfer payment to the payment accepting unit **120**. The user could observe the transferred funds on the touch screen **152** of the mobile device **150** and/or on the display **122**, **124** (FIG. **19**) of the payment accepting unit **120**. The transaction is completed just as if cash was inserted in the machine **120** with the user inputting his selection on the payment accepting unit **120** and the payment accepting unit **120** dispensing the product or service. After the selection is made, the change is returned to the mobile device **150** and this may be shown on the touch screen **152** of the mobile device **150**.

Hands-Free Mode: A "hands-free pay" feature (or just "hands-free") would most likely be used with "favorite" payment accepting units **120** (e.g., a frequently used vending machine at a user's work or school). From the user's perspective, he/she would approach the favorite payment accepting unit **120** and notice that the display **122**, **124** (FIG. **19**) of the payment accepting unit **120** shows funds available, he/she would select the product or service using the payment accepting unit's input mechanisms (e.g., buttons **126** or a touch screen display **124** shown in FIG. **19**), and he/she would retrieve dispensed services or products. It would be that simple. More specifically, when the user is within range, a pre-installed mobile application **140** automatically connects to the payment accepting unit **120** (e.g., a vending machine). The user may leave the mobile device **150** in a pocket, purse, briefcase, backpack, or other carrier. As the user approaches the payment accepting unit **120** and is in approximately "arm's-length" distance (e.g., 3 to 5 feet) of the payment accepting unit **120**, the user could observe the transferred funds on the display **122**, **124** (FIG. **19**) of the payment accepting unit **120**. The transaction is completed just as if cash was inserted into the payment accepting unit **120** with the user inputting his/her selection on the payment accepting unit **120** and the payment accepting unit **120** dispensing the product or service. After the selection is made, the change is returned to the mobile device **150**. FIG. **3** details when the hands-free mode would be available.

Multiple Vending Transactions (Multi-Vend): Both the manual and hands-free modes could be used multiple times in sequence (implemented, for example, as a loop) so that a user may make multiple purchases. After making his/her first selection and receiving his product (or service), the user would observe that additional funds were available on the display **122**, **124** (FIG. **19**) on the payment accepting unit **120**. He/she could make another selection (or multiple selections) and receive additional product(s) (or service(s)). More specifically, the display **122**, **124** (FIG. **19**) may reset as if the transaction is complete, but then, because the user is still standing in range, the mobile application **140** would send another credit to the payment accepting unit **120**, allowing for a second purchase. When the user walks away, the system clears (e.g., returns unused funds to the application **140** on the mobile device **150**).

The features described above, alone or in combination with other features described herein will revolutionize the hundred billion dollar automated retail industry. The hardware is very low cost and there are no reoccurring fees because no cellular connection is required on the machine **120**. Using the mobile-device-to-machine payment processing system described herein, operators of machines **120** can increase frequency of visits by purchasers and items sold with each visit.

The mobile-device-to-machine payment processing system described herein may be implemented as an apparatus, system, and/or method for enabling payments to a machine **120** via a mobile device **150**. The mobile-device-to-machine payment processing system may be better understood with reference to the drawings, but the shown mobile-device-to-machine payment processing system is not intended to be of a limiting nature.

Definitions

Before describing the mobile-device-to-machine payment processing system and the figures, some of the terminology should be clarified. Please note that the terms and phrases may have additional definitions and/or examples throughout the specification. Where otherwise not specifically defined, words, phrases, and acronyms are given their ordinary meaning in the art. The following paragraphs provide some of the definitions for terms and phrases used herein.

Adapter Module **100**: As shown in FIGS. **1** and **2**, the adapter module **100** (sometimes also herein called the "payment module **100**") is a physical device that is installed in a machine **120** (a payment accepting unit **120**). The shown adapter module **100** is an in-line dongle (a hardware device with software thereon) device that may be inserted in-line within a multi-drop bus (MDB) of a machine **120**. The adapter module **100** bridges the communication between the machine **120** and a mobile device **150**. Although described as a unique component, it should be noted that the adapter module **100** could be implemented as a plurality of devices or integrated into other devices (e.g., components of a machine **120**). In its unique component form, the adapter module **100** can be easily inserted into a machine **120** so that the machine **120** is able to perform new features with the assistance of the adapter module **100**. FIG. **20** shows components associated with the adapter module **100**. As shown in FIG. **20**, the communications unit **770** of the adapter module **100** includes short-range communication capability **776** (e.g., Bluetooth mechanisms). The shown example may be divided into multiple distinct components that are associated with each other or the example may be incorporated into or drawn from other technology (e.g., a computer or a payment accepting unit) as long as the components are associated with each other.

Mobile Device **150** and Application **140** (also referred to as a "mobile application," "mobile app," or "app"): In general, a mobile device **150** may be a user's personal mobile device **150**. The mobile device **150** (with a mobile application **140** thereon) acts as a communication bridge between the adapter module **100** (associated with a payment accepting unit **120**) and the server **130**. The mobile device **150** and the application **140**, however, are not "trusted" in that the communications (transmissions) it passes are encrypted. Encrypted (secured) communications are undecipherable (unencryptable, unreadable, and/or unuseable) by the mobile device **150**. This keeps the communications

passed between the adapter module **100** and the server **130** secured and safe from hacking. Mobile devices include, but are not limited to smart phones, tablet or laptop computers, or personal digital assistants (PDAs), smart cards, or other technology (e.g., a hardware-software combination) known or yet to be discovered that has structure and/or capabilities similar to the mobile devices described herein. The mobile device **150** preferably has an application (e.g., the application **140**) running on it. The term "app" is used broadly to include any software program(s) capable of implementing the features described herein. FIGS. **10A-10D** show user interfaces for the application **140** displayed by the mobile device **150**. It should be noted that the phrase "mobile device" can be assumed to include the relevant app unless specifically stated otherwise. Similarly, it should be noted that an "app" can be assumed to be running on an associated mobile device unless specifically stated otherwise. FIG. **21** shows components associated with the mobile device **150**. The shown example may be divided into multiple distinct components that are associated with each other or the example may be incorporated into or drawn from other technology (e.g., the cell phone itself) as long as the components are associated with each other.

Payment accepting unit **120** (or Machine **120**): A payment accepting unit **120** (or the machine **120**) is equipment that requires payment for the dispensing of an product and/or service. Payment accepting units **120** may be vending machines, parking meters, toll booths, laundromat washers and dryers, arcade games, kiosks, photo booths, toll booths, transit ticket dispensing machines, and other known or yet to be discovered payment accepting units **120**. Some payment accepting units **120** can accept cashless payments (payments other than cash (paper currency and coins)) by accepting payment from, for example, credit cards, debit cards, and mobile devices.

Network Connections: For purposes of this discussion, a persistent network connection is a wired or wireless communications connection that is ongoing (e.g., a dedicated connection, a dedicated online connection, and/or a hard-wired connection) or accessible on demand (e.g., the ability for the machine to make a temporary connection to a server or the ability for the user to contact a server from his mobile device). Typically the persistent network connection has been conducted over "long-range communication technology" or "long-range communication protocol" (e.g., hard-wired, telephone network technology, cellular technology (e.g., GSM, CDMA, or the like), Wi-Fi technology, wide area network (WAN), local area network (LAN), or any wired or wireless communication technology over the Internet that is known or yet to be discovered). Traditionally, machines that accept payment other than cash require a persistent (ongoing or accessible on demand) connection to a network to facilitate payment. This is true for machines that accept, for example, credit cards and debit cards. The payment accepting units **120** described herein do not require a traditional persistent network connection. The user's mobile device **150** acts as a communication bridge between the adapter module **100** and the server **130**. Communications between user mobile devices **150** and the servers (e.g., a system management server **130** and/or a funding source server **160**) take place using long-range communication technology. Communications between user mobile devices **150** and the adapter module **100** of the payment accepting unit **120** take place using "short-range communication technology" or "short-range communication protocol" (e.g., Bluetooth (such as Bluetooth 4.0, Bluetooth Smart, Bluetooth Low Energy (BLE)), near-field communication (NFC), Ultra Wideband (UWB), radio frequency identification (RFID), infrared wireless, induction wireless, or any wired or wireless technology that could be used to communicate a small distance (approximately a hundred feet or closer) that is known or yet to be discovered). Therefore, neither the adapter module **100** nor the payment accepting unit **120** requires a traditional persistent long-range wireless network connection. The communications technology shown in the figures may be replaced with alternative like communications technology and, therefore, specific shown communications technologies are not meant to be limiting. For example, Wi-Fi technology could be replaced with another long-range communication technology.

Server: A server is the host processing server that may be operated by the company running the payment processing system. For each user, the server **130** preferably maintains at least one "virtual wallet" having at least one "balance" (which can be $0) of designated funds for which the server **130** keeps an accounting. The balance may represent, for example, "cash" or it may be a "promotional value" that represents funds that may be spent under certain circumstances. If these funds begin to be depleted, the user may be notified (e.g., via the application **140** on the mobile device **150**) that additional funds need to be designated and/or transferred. Alternatively, funds from other sources (e.g., the funding source server **160**) may be automatically transferred to restore a predetermined balance. The balance may also be increased based on a promotion (e.g., points earned or coupons). As shown in FIG. **22**, the server includes appropriate processors **950**, memory **960** (which would keep an accounting of the user's balance in a manner similar to a gift card), and communication systems **970**. As shown in FIG. **22**, the communications unit **970** of the server **130** includes long-range communication capability **972** (e.g., cellular technology and/or Wi-Fi mechanisms). The server **130** also includes a security unit **955** for encrypting and decrypting messages. The server **130** receives an authorization request (sometimes also herein called an "AuthRequest") from the adapter module **100** (via a mobile device **150**) and, if funds are available, returns an authorization grant (sometimes also herein called an "AuthGrant" or an "authorization grant token") for funds. FIG. **22** shows components associated with the server **130**. The shown example may be divided into multiple distinct components that are associated with each other or the example may be incorporated into or drawn from other technology (e.g., a computer or a main frame) as long as the components are associated with each other.

Advertise Presence: Each adapter module **100** advertises its presence by broadcasting signals (advertising broadcast signals) to mobile devices in the zones **102**, **104**, **106**. Each adapter module **100** can listen to other adapter modules' advertisements.

Received Signal Strength Indicator (RSSI): The adapter module **100** may have a self-calibrating signal strength to determine zone thresholds (e.g., a payment zone threshold and an authentication zone threshold). At the time the user selects an item (product or service) from the payment accepting unit **120**, the Received Signal Strength Indicator (RSSI) is logged. At this moment, it is presumed the user is within "arm's-length" (which may be a predetermined length approximating the distance of a user standing in front of a machine for the purpose of making a purchase) from the payment accepting unit **120**. A mathematical computation (i.e., In-Range Heuristics) is conducted to derive the optimal RSSI threshold at which point payment should be triggered by an application **140** on a mobile device **150**. The threshold may be payment accepting unit specific and can vary over a

period of time. This optimal zone threshold is preferably reported to the mobile device **150** during an initial handshake.

In-Range Heuristics: A mathematical computation that determines the RSSI threshold to determine when a user is in the authorization zone **104** and/or the payment zone **102**. This computation can take into consideration numerous historical data points as well as transaction specific information such as which the mobile device **150** is being used, payment accepting unit type, among other factors. Preferably the RSSI is logged while the user is making his selection (this is the one time in the entire process that the user definitely will be "in range" (e.g., they will be arm's length from the machine **120** because they are physically interacting with the machine **120**). The type of user mobile device **150**, accelerometer data (e.g., is the user moving or stationary), and/or other information may also be logged while the user is making his selection. The adapter module **100** can give a reference RSSI for the payment zone **102** for the machine **120**, and the application **140** can make a +/− adjustment based on the specific mobile device **150** on which it is installed. Over a period of time, the payment processing system continues to improve itself based on additional data points.

Authorization Request ("AuthRequest:): When a user enters the authorization zone **104**, the mobile device **150** notifies the adapter module **100** and the adapter module **100** sends a secured authorization request (e.g., the encrypted authorization request) as a "message" (also referred to as a communication or transmissions) to the server **130** via the mobile device **150**. Encryption may be performed by a security unit **755** (FIG. **20**) with security technology (e.g., encryption and decryption means) that may be associated with the processing unit **750** and/or the memory **760**. Significantly, the AuthRequest is a request for authorization of funds, not a request for authorization of a transaction. The purpose of the funds is irrelevant to the server **130**.

Authorization Grant Token ("AuthGrant"): This is a "message" (also referred to as a communication or transmissions) encrypted by the security unit **955** (FIG. **22**) with security technology (e.g., encryption and decryption means) of the server **130** with the unique private key corresponding to the adapter module **100**. The secured authorization grant (e.g., the encrypted authorization grant) is passed from the server **130** to the adapter module **100** via the mobile device **150** in the form of a message. The mobile device **150**, however, is not able to decrypt and/or read the message. The authorization grant is in response to the authorization request. The amount of the funds granted by the AuthGrant may be determined by factors including, but not limited to, the amount of funds available (or, if funds are not available, a mini-loan could be granted), a pre-authorized amount (e.g., set by the server, set by the user during set-up, set by the funding source, or a standard amount), limited by time (e.g., only a certain amount per hour, or a predetermined amount at specific times of the day), limited to the maximum amount of an item on the machine (or enough for two or three items in the machine), or one or more of these and other factors. Significantly, the AuthGrant makes the funds available, but does not authorize a transaction. The AuthGrant may have an associated expiration period in that it may expire if it is not used in a pre-determined time period. The length of time before the AuthGrant expires may be determined by factors including, but not limited to, the trustworthiness of the user (e.g., the user has a long history with the payment processing system or some known provider (e.g., credit card provider, bank, or credit union), the user has a good credit rating, or the user has a large wallet balance), a pre-authorized time period (e.g., set by the server, set by the user during set-up, set by the funding source, or a standard time period), limited by time (e.g., predetermined time periods at specific times of the day such as longer times during breakfast, lunch, and dinner), limited by the machine or the products or services sold in the machine, limited by the number of other users near the machine (e.g., if it is a crowded machine, the AuthGrant may expire faster), or one or more of these and other factors. The AuthGrant remains valid until it expires or some other event occurs to end its validity (e.g., the user cancels it). This means that under normal circumstances the mobile device **150** will hold the AuthGrant authorizing use of funds for a pre-determined time period that will allow the user sufficient time to make a purchase. The authorized amount may be considered to be the "wallet balance" that is held in a virtual "wallet."

Synchronization: Time may be synchronized to the adapter module **100** from the server **130**. The server **130** sends time information with encrypted messages and the adapter module **100** uses the time encoded in the messages for synchronization.

The mobile-device-to-machine payment processing system and components thereof may have associated hardware, software, and/or firmware (a variation, subset, or hybrid of hardware and/or software). The term "hardware" includes at least one "processing unit," "processor," "computer," "programmable apparatus," and/or other known or yet to be discovered technology capable of executing instructions or steps (shown as the processing unit **750** in FIG. **20**, the processing unit **850** in FIG. **21**, and the processing unit **950** in FIG. **22**). The term "software" includes at least one "program," "subprogram," "series of instructions," or other known or yet to be discovered hardware instructions or hardware-readable program code. Software may be loaded onto hardware (or firmware) to produce a "machine," such that the software executes on the hardware to create structures for implementing the functions described herein. Further, the software may be loaded onto the hardware (or firmware) so as to direct the mobile-device-to-machine payment processing system (and components thereof) to function in a particular manner described herein or to perform a series of operational steps as described herein. "Hardware" such as the adapter module **100**, the mobile device **150**, and the payment accepting unit **120** may have software (e.g., programs and apps) loaded thereon. The phrase "loaded onto the hardware" also includes being loaded into memory (shown as the memory **760** in FIG. **20**, the memory **860** in FIG. **21**, and the memory **960** in FIG. **22**) associated with or accessible by the hardware. The term "memory" is defined to include any type of hardware (or other technology)-readable media (also referred to as computer-readable storage medium) including, but not limited to, attached storage media (e.g., hard disk drives, network disk drives, servers), internal storage media (e.g., RAM, ROM, EPROM, FLASH-EPROM, or any other memory chip or cartridge), removable storage media (e.g., CDs, DVDs, flash drives, memory cards, floppy disks, flexible disks), firmware, and/or other known or yet to be discovered storage media. Depending on its purpose, the memory may be transitory and/or non-transitory. Appropriate "messages," "communications," "signals," and/or "transmissions" (that includes various types of information and/or instructions including, but not limited to, data, commands, bits, symbols, voltages, currents, electromagnetic waves, magnetic fields or particles, optical fields or particles, and/or any combination thereof) over appropriate "communication paths,"

"transmission paths," and other means for signal transmission including any type of connection between two elements on the payment processing system (e.g., the adapter module **100**, the mobile device **150**, the payment accepting unit **120**, hardware systems and subsystems, and memory) would be used as appropriate to facilitate controls and communications.

It should be noted that the terms "programs" and "subprograms" are defined as a series of instructions that may be implemented as software (i.e. computer program instructions or computer-readable program code) that may be loaded onto a computer to produce a "machine," such that the instructions that execute on the computer create structures for implementing the functions described herein or shown in the figures. Further, these programs and subprograms may be loaded onto a computer so that they can direct the computer to function in a particular manner, such that the instructions produce an article of manufacture including instruction structures that implement the function specified in the flow chart block or blocks. The programs and subprograms may also be loaded onto a computer to cause a series of operational steps to be performed on or by the computer to produce a computer implemented process such that the instructions that execute on the computer provide steps for implementing the functions specified in the flow chart block or blocks. The phrase "loaded onto a computer" also includes being loaded into the memory of the computer or a memory associated with or accessible by the computer. Separate, albeit interacting, programs and subprograms may be associated with the adapter modules **100**, the server **130**, and the mobile device **150** (including the mobile application **140**) and these programs and subprograms may be divided into smaller subprograms to perform specific functions.

The terms "messages," "communications," "signals," and/or "transmissions" include various types of information and/or instructions including, but not limited to, data, commands, bits, symbols, voltages, currents, electromagnetic waves, magnetic fields or particles, optical fields or particles, and/or any combination thereof. Appropriate technology may be used to implement the "communications," "signals," and/or "transmissions" including, for example, transmitters, receivers, and transceivers. "Communications," "signals," and/or "transmissions" described herein would use appropriate technology for their intended purpose. For example, hard-wired communications (e.g., wired serial communications) would use technology appropriate for hard-wired communications, short-range communications (e.g., Bluetooth) would use technology appropriate for close communications, and long-range communications (e.g., GSM, CDMA, Wi-Fi, or the like) would use technology appropriate for remote communications over a distance. Appropriate security (e.g., SSL or TLS) for each type of communication is included herein. The security units **755** and **955** include technology for securing messages. The security technology may be, for example, encryption/decryption technology (e.g., software or hardware). Although encryption/decryption is discussed primarily as being performed using a unique private key, alternative strategies include, but are not limited to encryption/decryption performed using public/private keys (i.e., asymmetric cryptography), or other encryption/decryption strategies known or yet to be discovered. Appropriate input mechanisms and/or output mechanisms, even if not specifically described, are considered to be part of the technology described herein. The communications unit **770** (shown in FIG. **20**) of the adapter module **100** is shown as including appropriate input and output mechanisms **772**, **774** that may be implemented in association (e.g., directly or indirectly in functional communication) with male and female adapters **720**, **730** of the adapter module **100**. The communications unit **870** (shown in FIG. **21**) of the mobile device **150** includes mechanisms for both long-range communications (shown as the long-range communication capability **872** such as cellular and/or Wi-Fi mechanisms) for communicating with the server **130** and short-range communications (shown as the short-range communication capability **876** such as Bluetooth mechanisms) for communicating with the adapter module **100**.

When used in relation to "communications," "signals," and/or "transmissions," the terms "provide" and "providing" (and variations thereof) are meant to include standard means of provision including "transmit" and "transmitting," but can also be used for non-traditional provisions as long as the "communications," "signals," and/or "transmissions" are "received" (that can also mean obtained). The terms "transmit" and "transmitting" (and variations thereof) are meant to include standard means of transmission, but can also be used for non-traditional transmissions as long as the "communications," "signals," and/or "transmissions" are "sent." The terms "receive" and "receiving" (and variations thereof) are meant to include standard means of reception, but can also be used for non-traditional methods of obtaining as long as the "communications," "signals," and/or "transmissions" are "obtained."

The term "associated" is defined to mean integral or original, retrofitted, attached, connected (including functionally connected), positioned near, and/or accessible by. For example, if the user interface (e.g., a traditional display **122** (FIG. **19**), a touch screen display **124** (FIG. **19**), a key pad **126** (FIG. **19**), buttons **126** (FIG. **19**, shown as part of the key pad **126**), a keyboard (not shown), and/or other input or output mechanism) is associated with a payment accepting unit **120**, the user interface may be original to the payment accepting unit **120**, retrofitted into the payment accepting unit **120**, attached to the payment accepting unit **120**, and/or a nearby the payment accepting unit **120**. Similarly, adapter modules **100** may be associated with payment accepting units **120** in that the adapter modules **100** may be original to the payment accepting unit **120**, retrofitted into the payment accepting unit **120**, attached to the payment accepting unit **120**, and/or a nearby the payment accepting unit **120**.

System Overview

FIGS. **5**, **6**, and **7** together show major components of the mobile-device-to-machine payment system and the interactions there-between.

As shown, the adapter module **100** functionally connected bi-directionally to the payment accepting unit **120** via a wired serial connection such that no security is necessary. The adapter module **100** is also functionally connected bi-directionally to the mobile device **150** (and its installed mobile application **140**) via short-range communication technology (e.g., a Bluetooth connection). Because the mobile device **150** is not a "trusted" link (e.g., it could be hacked by a user), only secured communications (transmissions) are passed between the adapter module **100** and the mobile device **150**. This keeps communications secured and safe from hacking. The mobile device **150** (and its installed mobile application **140**) is also functionally connected bi-directionally to a system management server **130** and/or a funding source server **160** via long-range communication technology (e.g., Wi-Fi or Cellular connection) that preferably has appropriate security (e.g., SSL security). Security between the mobile device **150** and the system management

server **130** has the advantage of protecting communications from the mobile device **150** to the system management server **130** that may include sensitive data and may not be encrypted. The system management server **130** and the funding source server **160** may be connected via a wired Internet connection with SSL security. The system management server **130** may be connected via a wired Internet connection with SSL security to an operators' server **170**. Although not necessary to implement a purchase transaction, for other purposes (e.g., inventory), the operators' server **170** may be connected to the payment accepting unit **120** using a handheld computer sync or a cellular connection.

Also, a unique private key may be used to securely transmit encrypted messages between the adapter module **100** and the system management server **130** (although the encrypted transmissions would most likely be routed through the mobile device **150**). The server **130** stores a private key for each adapter module **100**, and this key is only known to the adapter module **100** and the server **130**. No intermediary is privy to this key (especially not the mobile device **150**). When the adapter module **100** and the server **130** communicate messages (e.g., AuthRequest and AuthGrant), the security unit **755** of the adapter module **100** encrypts the message with its private key and passes the message to the mobile device **150**. The mobile device **150** (which preferably cannot decrypt the message) passes the encrypted message to the server **130**. The server **130** is able to decrypt the message using the security unit **955** of the adapter module **100** and the unique private key. The security unit **955** of the server **130** uses this same unique private key to encrypt messages to the adapter module **100** and sends the message to the mobile device **150** to relay to the adapter module **100** that is able to decrypt the message using the security unit **755** of the adapter module **100** and the unique private key.

FIG. **7** shows specific communications and messaging with a vending sequence (the numbers to the left of the communications and messaging) between the adapter module **100**, the mobile device **150**, and the system management server **130**. These communications are discussed in more detail in the discussion pertaining to the schematic flow diagrams (FIGS. **8**A-**8**G) and the flow charts (FIGS. **9**A-**9**E).

It should be noted that FIGS. **5**, **6**, and **7** are examples, and are meant to help in the understanding of the mobile-device-to-machine payment system. For example, the shown long-range communications technology may be replaced with alternative long-range communications technology known or yet to be discovered, the shown short-range communication technology may be replaced with alternative short-range communication technology known or yet to be discovered, and the shown security may be replaced with alternative security known or yet to be discovered. The shown connections are meant to be examples, and there may be intermediaries that are not shown. The shown components have been simplified in that, for example, only one mobile device **150** (or machine **120**, adapter module **100**, or server **130**) is shown where many may be included. Finally, the order of the steps may be changed and some steps may be eliminated.

Adapter Module

FIGS. **11-18** show views of adapter module **100***a* (referred to generally as adapter module **100**). Adapter module **100** is a relatively low cost hardware component that is pre-configured to work with the industry standard multi-drop bus (MDB). On machines without MDB technology, the adapter module **100** can be configured or designed to work with other serial protocols or activate a switch. In essence the adapter module **100** simulates establishing payment on payment accepting unit **120** in much the same manner as other alternative forms of payment (e.g., cash).

The shown adapter modules **100** are preferably designed to be used as an in-line dongle for in-line insertion within, for example, a MDB of a machine **120**. The wire used in MDB technology uses male and female connection ends or adapters to allow the attachment of peripherals. In the case of a vending machine, the wire with the connection ends or adapters would be present to allow the attachment of a payment receiving mechanism (e.g., a coin mechanism). The MDB male and female adapters **700**, **710** may be separated (as shown in FIGS. **17-18**). The adapter module **100***a* in FIGS. **11** and **17-18** has a male adapter **720** and a female adapter **730**. The adapter module **100***a* may be plugged (inserted) in serial ("in-line") with the wire. For example, the MDB female adapter **710** may be connected to the male adapter **720** of the adapter module **100** and the MDB male adapter **700** may be connected to the female adapter **730** of the adapter module **100**. The resulting in-line configuration is shown in FIG. **19**. It should be noted that the adapter modules **100** are designed to allow pass-through communications so that if the mobile-device-to-machine payment processing system is not enabled (e.g., for a particular purchase or simply turned off) the MDB functions as though the adapter module **100** is not there and the machine **120** can function normally.

Hands-Free Mode

Summarily, if it is available, a hands-free mode, from the user's perspective, would allow the user to approach a favorite payment accepting unit **120** and notice that the display (e.g., the displays **122** or **124** shown in FIG. **19**) associated with the payment accepting unit **120** shows funds available (e.g., the wallet balance), he would select the product or service using input mechanisms (e.g., buttons **126** or a touch screen display **124** shown in FIG. **19**) associated with the payment accepting unit **120**, and he would retrieve his dispensed services or products.

During an initial handshake with the mobile device **150** (when the user is within range), the adapter module **100** reports to the mobile device **150** whether or not hands-free mode is available. If it is available, the installed mobile application **140** automatically connects to the payment accepting unit **120** without the user having to interact with the mobile device **150**. The user observes that funds are available on the display **122**, **124** of the payment accepting unit **120** and completes the purchase transaction as if cash was inserted in the machine **120** by inputting his selection on the payment accepting unit **120**. The payment accepting unit **120** dispenses the product or service. After the selection is made, the change is returned to the mobile device **150**.

Whether hands-free payment is available is determined by factors including, but not limited to whether if other mobile devices **150** are in range, if other adapter modules **100** are in range, if there are any alerts, if the payment trigger threshold is having wide variances and so deemed unstable, or if the payment accepting unit operator (e.g., a vending machine operator) has opted to disable hands-free mode for the payment accepting unit **120**. In the latter instance, operators can disable via a maintenance mobile device **150**, as well as through the operators' server **170** and/or the system management server **130**.

FIG. **3** is a table that shows considerations, conditions, or factors that may be used to determine whether the hands-free pay feature is available. Starting at the "Favorite?" column, this indicates whether the payment accepting unit **120** is a favorite machine. Preferably the hands-free pay feature is only available for use with "favorite" payment accepting units **120** (e.g., a vending machine at work or school). The "Alert" column has to do with whether there is some reason (e.g., there are too many users in range) that the hands-free pay feature should not work and, if there is such a reason, the user will be notified (alerted) and may be able to use the manual mode to resolve the alert and/or complete the transaction. FIG. **3** shows situations in which a user is or is not able to make hands-free purchases from a machine **120** using a mobile application **140** on his mobile device **150**. It should be noted that the shown interface is an example. For example, some of the features could be automated or pre-selected. (It should be noted that the left hand column, the "Tab" column, relates to whether the selected tab on the mobile application **140** is "all" or "favorite." FIGS. **10A-10D** all show these tabs. Unlike the other columns in FIG. **3**, this column has more to do with the functionality and view of the application **140** than specifically with the hands-free feature. The tabs would allow a user to select whether he wanted to be alerted when he was in range of all payment accepting units **120** or just "favorite" payment accepting units **120** and the application **140** would show the appropriate view.)

Balance Display: An optional feature of the mobile-device-to-machine payment system that is particularly helpful in the hands-free mode (although it may be available in the manual mode and/or in a multiple-vend scenarios) is when the user's mobile device **150** sends "credit" to the payment accepting unit **120** (either via hands-free payment or through a manual swipe), the wallet balance is sent to the payment accepting unit **120** that is then displayed to the user on a display **122**, **124** of the machine **120**. This is particularly beneficial during hands-free mode when the user does not retrieve the mobile device **150** and, therefore, may not know the balance. Also, in a multiple-vend scenario the user would not have to calculate a remaining balance.

An example of a hands-free, multiple-vend scenario where a balance is displayed by the payment accepting unit **120**, follows: The user has $5.00 in his/her virtual wallet as that is the amount that has been authorized (the AuthGrant being stored on the mobile device **150**). The user walks up to the payment accepting unit **120** and $5.00 is displayed on the display **122**, **124** of the payment accepting unit **120** since hands-free mode was enabled and credit was sent (e.g., via the short-range communication capability) to the payment accepting unit **120**. The user makes a selection of $1.50 by interacting (e.g., pressing buttons) with the machine **120**. The item (product or service) is dispensed and the "change" is "returned" (e.g., via the short-range communication capability) to the virtual wallet. But since the user is still standing in the payment zone **102**, the remaining wallet balance of $3.50 is sent to the payment accepting unit **120** and displayed so that the user can now see that he/she has a $3.50 balance. (It should be noted that the authorized funds may remain on the machine **120** and not be transferred back to the mobile device **150** between transactions.) The user decides to purchase a $1.50 item, and the transaction is completed as usual (e.g., by interacting with the machine **120**). Now the user is still standing in the payment zone **102** and he/she sees the wallet balance of $2.00 on the display **122**, **124** of the payment accepting unit **120**. The user decides that he/she does not wish to purchase anything else and simply walks away. As he/she walks out of the payment zone **102**, the credit is cleared from the machine **120**, but he/she is left with the knowledge that his wallet balance is $2.00 even though he/she never touched the mobile device **150**. Communications between the payment accepting unit **120** and the adapter module **100** (via the mobile device **150**) handle the accounting incidental to the transaction. The remaining balance ($2.00) is technically stored on the server **130**, and may be reflected on the application **140** on the mobile device **150**.

Multiple Distinct Zones

As shown in FIGS. **1-2**, the functions performed by the adapter module **100** can be divided into distinct zones: a first "communication zone" (e.g., "Bluetooth range" **106**), a second "authorization zone" **104**, and a third "payment zone" **102**. The payment zone **102** is smaller than or equal to (overlapping completely) the authorization zone **104**. Put another way, the payment zone **102** is within or coextensive with the authorization zone **104**. The payment zone **102** is a subset of the authorization zone **104** with a ratio of the payment zone **102** to the authorization zone **104** ranging from 0.01:1 to 1:1. It is not necessarily a fixed ratio and can vary between different payment accepting units **120**, different mobile devices **150**, different users, and over time. While the zones **102**, **104**, **106** are depicted as having a uniform shape, the zones may not necessarily be uniform (or constant over time) in that the shape can vary. For example, the shape of the Bluetooth range **106** may vary depending on environmental conditions such as obstacles in the room and payment accepting unit **120** door/wall materials.

Bluetooth Range **106** (sometimes also herein called the "communication zone"): The outermost range is the Bluetooth range **106** (shown in FIGS. **1-2**). This is the area in which the adapter module **100** is able to broadcast its presence. In most situations, the Bluetooth range **106** is a passive range in that no actual data is exchanged between the mobile device **150** and the adapter module **100**. While in the Bluetooth range **106**, the mobile device **150** monitors the RSSI (Received Signal Strength Indicator).

Authorization Zone **104**: The middle region is the authorization zone **104** (shown in FIGS. **1-2**). This is a computed area based on the RSSI. As mentioned, the mobile device **150** monitors the RSSI while it is in the Bluetooth range **106**. When the RSSI reaches a certain predetermined threshold based on In-Range Heuristics, the mobile device **150** can be considered to be in the authorization zone **104**. In the authorization zone **104** the mobile device **150** establishes a connection to the adapter module **100** (e.g., a Bluetooth connection (FIG. **5**) with SSL protection (FIG. **6**)) and informs the adapter module **100** of its presence. After a successful handshake with the adapter module **100**, the mobile device **150** registers the adapter module **100** and the adapter module **100** requests an authorization to the server **130** via the mobile devices' network connection (e.g., a Wi-Fi or cellular connection (FIG. **5**) with SSL protection (FIG. **6**)). It is important to note the mobile device **150** and the adapter module **100** have a non-exclusive relationship at this point. The adapter module **100** may collect registrations for all mobile devices **150** that are within the authorization zone **104**.

An authorization occurs in preparation for when the user enters the payment zone **102** (shown in FIGS. **1-2**). An authorization expires in a set period of time (for example, five minutes), so if the mobile device **150** is still in the authorization zone **104** at the time of expiration, the adapter

module **100** submits for and receives another authorization. This will continue for a set number of times (for example, the limit may be three times to limit cases of numerous authorizations for a mobile device that may remain in the authorization zone **104** for an extended period of time without completing a transaction). Should authorization fail (for instance if the limit had been reached) prior to the user entering the payment zone **102**, the adapter module **100** will request authorization when the mobile device **150** enters the payment zone **102** (which adds a few seconds to the experience).

Payment Zone **102**: As a user enters the payment zone **102**, the mobile device **150** establishes exclusive control of the adapter module **100**. Once established, any other user in the payment zone **102** is put into a "waiting" status.

In the payment zone **102**, the payment can be triggered automatically if the payment processing system has and is in hands-free mode. In such instances, the mobile device **150** is running the application **140** in background mode and will send credit to the payment accepting unit **120** without any explicit user interaction. The user completes the transaction on the payment accepting unit **120** in much the same manner as if cash had been inserted into the payment accepting unit **120** to establish credit. After the user completes the transaction (that may include one or more purchases), details of the transaction are preferably returned to the mobile device **150** and server **130** in separate messages. The message to the server **130** is preferably encrypted with the adapter module's **100** private key (FIG. **6**) to ensure data integrity. As shown in FIG. **7**, the "private key" coded message (Encrypted VendDetails) is preferably sent via the mobile device **150**. The message to the mobile device **150** may be sent solely for the purpose of closing the transaction. The transaction history and balance are updated server-side via the encrypted message sent to the server **130**.

The other mode of operation is manual mode. In manual mode, the user launches the mobile device **150** and is able to swipe to send payment to the payment accepting unit **120**. The user can also swipe back to cancel the payment. Like in hands-free mode, the purchase transaction is completed on the payment accepting unit **120** in the same manner as if cash were inserted into the payment accepting unit **120**. The mobile device **150** is only used to send payment. Selection is made directly on the payment accepting unit **120**.

Self-Calibrating Zone Threshold: A key, but optional feature, of the payment processing system is a self-calibrating payment zone RSSI threshold. Because RSSI can vary machine to machine, environment to environment, and device to device, having a fixed threshold at which payment is triggered can be problematic. The approach suggested herein is the creation of a self-calibrating threshold. When the user is interacting with the payment accepting unit **120** (such as when he makes his selection on the payment accepting unit **120**), the payment accepting unit **120** notifies the adapter module **100** and the adapter module **100** logs the conditions such as RSSI, type of user mobile device **150**, accelerometer data, and other information. It is at this point that it can be ascertained safely that the user is within arm's-length from the payment accepting unit **120** (by necessity the user is arm's-length because he is making some physical interaction with the payment accepting unit **120**). This is the only point in the entire transaction in which it can be certain that the user is within arm's-length from the payment accepting unit **120**.

FIG. **4** shows a simplified set of steps involved when users enter the payment zone **102**. Specifically, FIG. **4** shows that credit is established **200** (this may have been done in the authorization zone **104**, but if not it would be handled in the payment zone **102**), that the user makes a selection using the machine **202**, that the machine notifies the adapter module of the selection **204**, that the adapter module (optionally) logs the RSSI **206**, and that the purchase process(es) continues **208**. Using the historically logged RSSI data, the adapter module **100** calculates one of several "average" RSSI using various mathematical models. This "average" could be a traditional average, a moving average, a weighted average, a median, or other similar summary function. The adapter module **100** could pre-process the historical data before running the function, such as to eliminate top and bottom data points, suspect data points, etc.

Optionally, during the handshake between the mobile device **150** and the adapter module **100**, the information transmitted to the adapter module **100** may include, for example, the model of the mobile device **150**. Using the received information pertaining to the mobile device models, the adapter module **100** can create multiple payment thresholds, one for each mobile device model. This allows for variances that may be inherent in different types of Bluetooth radios. An alternative to this method is for the adapter module **100** to broadcast a baseline payment zone threshold, and the mobile device **150** can use an offset from this baseline based on its specific model type. The payment zone thresholds (or baseline offsets) can be unique to specific types of mobile devices (e.g., by manufacturer, operating system, or component parts), models of mobile devices, or individual mobile devices (unique to each user).

In a typical scenario in which the payment zone threshold has been calibrated, the adapter module **100** advertises its presence along with the threshold at which it considers any mobile device **150** to be in the authorization zone **104**. This is a one-way communication from adapter module **100** to mobile device **150**. Once the mobile device **150** enters the authorization zone **104**, there is a handshake that is established between the adapter module **100** and the mobile device **150**. During this handshake, the mobile device **150** can share its model information with the adapter module **100**, and the adapter module **100** can return the payment zone **102** threshold for that specific model.

Optionally, in addition to calibrating the payment zone threshold, the adapter module **100** can apply the self-calibrating model to the authorization zone **104** to calibrate the authorization zone threshold. As with the payment zone thresholds, the authorization zone thresholds can be unique to specific types of mobile devices, models of mobile devices, or individual mobile devices. In this scenario, the adapter module **100** would broadcast multiple thresholds by device type and the mobile device **150** would determine which threshold to apply (or alternatively broadcast a baseline and the mobile device **150** uses an offset based on its device model). Even in this scenario, the authorization zone **104** is a one-way communication.

Optionally, along with the threshold that is calculated (in the payment and/or the authorization zone(s)), a safety margin can be added to minimize scenarios in which a user is within range, but the mobile-device-to-machine payment processing system does not recognize it because the threshold may not have been reached. For example, if the calculated RSSI for an iPhone™ 5 on machine **4567** is −68 db, the mobile-device-to-machine payment processing system may add a safety margin of −5 db, and establish the threshold at −73 db. So when a user's phone is communicating with the adapter module **100** at an RSSI of −73 db or better, the mobile-device-to-machine payment processing system will allow the mobile device **150** to credit the payment accepting

unit **120**. The safety margin can be set on the server **130** and downloaded to the adapter module **100**, or set on the mobile device **150**, or set on the adapter module **100** itself.

Optionally, in the payment zone threshold, the mobile device **150** can use other data to determine when to cancel the exclusive control of the payment accepting unit **120**, to identify when the user is moving out of the payment zone **102**. External data could include accelerometer data from the mobile device **150**. Using that data, the mobile device **150** can determine whether the user is standing relatively still in front of the payment accepting unit **120**, or if the user is in motion—effectively walking away from the payment accepting unit **120**.

Signal Unavailability Adaptation

The mobile-device-to-machine payment processing system described herein uses a mobile device's **150** short-range communication technology (e.g., Bluetooth mechanisms) (shown as short-range communication capability **876** in FIG. **21**) and a mobile device's **150** long-range communications technology (e.g., cellular and/or Wi-Fi mechanisms) (shown as long-range communication capability **872** in FIG. **21**). The short-range communication capability **876** communicates with the adapter module's **100** short-range communication technology (e.g., Bluetooth mechanisms) (shown as short-range communication capability **776** in FIG. **20**). The long-range communication capability **872** communicates with the server's **130** long-range communications technology (e.g., cellular and/or Wi-Fi mechanisms) (shown as long-range communication capability **972** in FIG. **22**). The mobile device **150** (with a mobile application **140** thereon) acts as a communication bridge between the adapter module **100** (associated with a payment accepting unit **120**) and the server **130**. This process is described herein and works properly if there is cellular or Wi-Fi coverage within the payment zone **102**.

One option if there is no cellular or Wi-Fi coverage within the payment zone **102** is to determine whether there is cellular or Wi-Fi coverage within the authorization zone **104** or the Bluetooth range **106**. If there is, then the sizes of the zones **102**, **104**, **106** could be adapted and the timing could be adapted. For example, if the mobile devices **150** detected problems with the cellular or Wi-Fi coverage within the payment zone **102**, the user could carry his mobile device **150** into the other zones (or the mobile device **150** could use short-range communication technology to communicate with other mobile devices **150** within the authorization zone **104** or the Bluetooth range **106**) to determine whether the zones have cellular or Wi-Fi coverage. If they do have coverage, communication between the mobile device **150** and the server **130** can be advanced (conducted earlier when the mobile device **150** is further from the machine **120**) or delayed (conducted later when the mobile device **150** is further from the machine **120**). This can be thought of as changing the size or shapes of the zones **102**, **104**, **106**. The timing would also have to be adjusted so that the authorization of funds (AuthGrant) does not expire before the user has a chance to make a purchase. It also means that balance updates to the server **130** may happen after the user has moved away from the machine **120** and has cellular or Wi-Fi coverage again.

Another option if there is no cellular or Wi-Fi coverage within any of the zones **102**, **104**, **106** is for the user to obtain authorization while outside of the zones in a place with cellular or Wi-Fi coverage. This may occur, for example, if a user knows that he will be going to a place with a payment accepting unit **120** equipped with an adapter module **100** (perhaps to a favorite payment accepting unit **120**) that does not have (or rarely has) cellular or Wi-Fi coverage. A user may also use the mobile application **140** to query payment accepting units **120** in a given range (e.g., within 50 miles) or at a given location (e.g., at a campground or in a particular remote city) to determine whether there is cellular or Wi-Fi coverage within the zones **102**, **104**, **106**. The user can then obtain pre-authorization from the server **130** using the mobile application **140**. Again, the timing would also have to be adjusted so that the authorization of funds (AuthGrant) does not expire before the user has a chance to make a purchase. It also means that balance updates to the server **130** may happen after the user has moved away from the machine **120** and has cellular or Wi-Fi coverage again. A mobile-device-to-machine payment system having the ability to implement this option would be able to accept cashless payments without requiring any network connection near the payment accepting unit **120**. In some implementations, the mobile-device-to-machine payment processing systems described herein is located in a remote location where no signal is available, therefore, can accept cashless payments.

As an example of a situation in which there might be no cellular or Wi-Fi coverage within any of the zones **102**, **104**, **106** of a particular payment accepting unit **120**, the user (a teenager) may be traveling to a remote location to attend summer camp where there is no cellular or Wi-Fi coverage. The camp may have several payment accepting units **120** (e.g., a machine that creates a dedicated "hot spot" that requires payment for use, vending machines, or machines for renting equipment such as bikes, kayaks, or basketballs). The camp facility might notify parents that the mobile-device-to-machine payment system is available. The parents, while at home, could obtain authorization for a particular amount (that could be doled out a certain amount per day or limited to type of machine or location) to be authorized and "loaded" into the user's mobile device **150** and specify that the authorization will not expire for a certain period or until a certain date. Thereafter, while at camp, the user could use the mobile application **140** on his mobile device **150** in a manner similar to those discussed elsewhere herein. Short-range communications may be used for communications between the adapter modules **100** (associated with the machines **120**) and users' mobile devices **150**.

One subtle but powerful component of the payment processing system described herein is that it requires a long-range communication capability (e.g., an Internet or cellular network connection) only in the authorization zone **104** and only for the time period required to send the AuthRequest and receive the AuthGrant. Once a valid AuthGrant is received by the mobile device **150**, the long-range communication capability (e.g., an Internet or cellular network connection) is not required by either the mobile device **150** or the adapter module **100** in the payment zone **102** as long as the AuthGrant is valid (unexpired). This mechanism allows the system to seamlessly handle authenticated transactions in (temporary) offline mode, with the deferred acknowledgement and transaction messages performing the bookkeeping and cleanup when network connection is regained. The alternatives described above provide a unique way to artificially extend the authorization zone to include any location where the mobile device **150** can communicate with the server **130**.

Multiple User Resolution

As shown in FIG. **2**, in one practical scenario, multiple users are in the zones **102**, **104**, **106**. As shown in FIG. **2**,

users **1**, **2**, and **3** are in the payment zone **102** near the machine **120**; users **5** and **6** are shown as positioned between the authorization zone **104** and the Bluetooth range **106**; users **4** and **7** are in the Bluetooth range **106**, user **10** is positioned on the edge of the Bluetooth range **106**; and users **8** and **9** are positioned outside of Bluetooth range **106**. In some implementations, the mobile-device-to-machine payment processing system manages and resolves issues pertaining to multiple users.

Users **4** and **7** are within the Bluetooth range **106** and the user **10** is either entering or leaving the Bluetooth range **106**. Within the Bluetooth range **106** the users' mobile devices **150** are able to see the adapter module's **100** advertisement. In this zone, the mobile device **150** preferably does not initiate a connection. The adapter module **100** is preferably unaware of the users in the Bluetooth range **106**. All the adapter module **100** is doing is advertising its presence to any multitude of users that may be in Bluetooth range **106**.

The adapter module **100** begins to log users as the users (and their respective mobile devices **150**) enter the authorization zone **104** (shown in FIG. **2** as users **5** and **6**). At this point, there is a non-exclusive connection initiated by the mobile device **150** to the adapter module **100**. It does a handshake (e.g., to exchange information needed to obtain authorization and, optionally, to log information needed for a self-calibrating authorization zone threshold) and the mobile device **150** contacts the server **130** for an authorization (e.g., sending an AuthRequest and receiving an AuthGrant). The adapter module **100** registers all mobile devices **150** that have requested and received AuthGrants. The adapter module **100** continues communicating with any other mobile device **150** that enters the authorization zone **104**. After initial contact, the adapter module **100** may provide the mobile device **150** with a deferral delay of when to check back in with the adapter module **100** allowing opportunity for other mobile devices **150** to communicate with the adapter module **100**.

If there is only one user in the payment zone **102**, a purchase transaction may be performed. If there are multiple users in the payment zone **102**, the mobile-device-to-machine payment system must handle the situation.

One optional solution for handling the situation of the multiple users in the payment zone **102** is queuing users in the payment zone **102**. Once any mobile device **150** enters the payment zone **102**, it establishes exclusivity to a particular mobile device **150** (e.g., in a first-come-first-serve manner). Technically, however, the adapter module **100** is not establishing an exclusive connection to the mobile device **150**. The adapter module **100** can still perform a round-robin poll and communicate with and advertise to other mobile devices **150**. Instead, the adapter module **100** establishes a queue prioritized by RSSI and time (e.g., who was first and whether the authorization has expired) and it notifies (e.g., alerts) other mobile devices **150** to wait. The earliest valid (unexpired) authorization takes precedence when there is any tie in the RSSI. Otherwise, for example, the strongest average RSSI takes priority. Preferably the queue is not a static measure of the RSSI but an averaged measure over the period of time in the queue. This compensates for a scenario in which a user may be walking around in the queue and then shows up at the payment accepting unit **120** just as the previous user is finishing. If another user was also in the payment zone **102** and stood there the entire time, but may have newer authorization, he could win out.

Anytime that the adapter module **100** cannot determine exactly which user is in the payment zone **102** in front of the payment accepting unit **120**, the adapter module **100** will disable hands-free payment. The mobile device **150** will send an alert to the user and he can use swipe to pay (manual mode). All users in payment zone **102** will show "Connected" and the first to swipe payment to the payment accepting unit **120** then locks out other users.

Multiple Module Resolution

In the scenario where there are multiple modules present, determining which payment accepting unit **120** a user is in front of can be a challenge. In some implementations, the mobile-device-to-machine payment processing system described herein allows adapter modules **100** to communicate to other adapter modules **100** in range via Bluetooth. Each user receives authorization grants for specific payment accepting units **120**. This means if there are multiple adapter modules **100** within the same authorization zone **104**, there will be multiple authorization grants for the user. When the user enters the payment zone **102**, it can be difficult to differentiate which payment accepting unit **120** the user is in front of if the payment zones **102** overlap.

To solve this problem, when the user enters the payment zone **102**, the adapter modules **100** communicate with each other to determine the RSSI for the particular user (based on the signal from his mobile device **150**) to triangulate which adapter module **100** (and the associated payment accepting unit **120**) is closer to the user. Optionally, the inter-module communications can restrict the user to establishing an exclusive connection with only one payment accepting unit **120**.

Optionally, when the user connects to a payment accepting unit **120**, the mobile device **150** can send a communication to the payment accepting unit **120** for momentary display to the user on the display **122**, **124** of the payment accepting unit **120**. For example, the mobile device **150** can send a communication (e.g., "connected" or "Fred's Mobile Device Connected") to the payment accepting unit's display **122**, **124** for a predetermined period of time (e.g., 1-3 seconds) so when the user is in payment zone **102**, it is clear which payment accepting unit **120** the user is connected to prior to making a purchase (either in hands-free or manual mode).

In addition, when the user is in manual mode, the mobile device **150** can display (e.g., on the touch screen **152** as shown in FIGS. **10**A-**10**D) a visual indication of the payment accepting unit **120** (e.g., a picture and/or a payment accepting unit ID of the payment accepting unit **120**) for visual confirmation. If the user is in manual mode, the user can manually change the payment accepting unit **120**.

Descriptive Scenario

FIG. **7**, FIGS. **8**A-**8**G, and **9**A-**9**E (as well as other figures) can be used to understand a detailed scenario of the mobile-device-to-machine payment processing system described herein. A flow of communications and steps are loosely described below with reference to these (and other figures). It should be noted that alternative scenarios could include, for example, a modified order of the steps performed.

Prior to vending transactions, a user downloads a mobile application **140** onto his mobile device **150**, creates an account, and configures a funding source via, for example, a funding source server **160**. A funding source may be, for example, a debit card, a credit card, campus cards, rewards points, bank accounts, payment services (e.g., PayPal™) or other payment option or combination of payment options known or yet to be discovered. The funding sources may be

traditional and/or nontraditional payment sources that are integrated into the ecosystem described herein and then used indirectly as a source of funds. Funds from the funding source are preferably held on the server **130** such that when an AuthRequest is received by the server **130**, the server **130** can send an AuthGrant authorizing funds for a purchase.

The user can specify one or more "favorite" adapter module(s) **100** (that has a one-to-one relationship to the payment accepting unit **120**) that he may visit regularly, such as a vending machine at school or work. Favorite adapter modules **100** appear on a pre-filtered list and allow for additional rich features such as hands-free payment.

The payment accepting unit **120** may be equipped with an adapter module **100** that is constantly advertising its availability via Bluetooth (or other "signals," "communications," and/or "transmissions"). This ongoing advertising and scanning for adapter modules is shown in FIG. **8**A. As shown, the mobile device **150** is continuously scanning for any adapter module **100** within Bluetooth (or other "signal," "communication," and/or "transmission") range. When the user is within range of that adapter module **100**, the mobile device **150** tracks and monitors the signal strength until a predetermined "authorization zone" threshold is achieved.

FIGS. **8**B and **9**A generally show that when the authorization zone threshold is reached, the mobile device **150** enters the authorization zone (block **302**) and registers the adapter module **100**. The mobile device **150** connects to the server **130** (block **304**). The application **140** on the mobile device **150** creates a request for authorization (AuthRequest) and passes the AuthRequest to the server **130** using appropriate communication technology (e.g., GSM, CDMA, Wi-Fi, or the like) (block **306**). The server **130** responds with an authorization grant (AuthGrant) encrypted with the specific adapter module's private key (block **306**). This authorization token may minimally include the User identifier (ID), Apparatus ID (for the adapter module **100**), authorization amount, and expiration time. The mobile device **150** receives the AuthGrant from the server **130**, and retains it until the mobile device **150** is ready to issue payment to an adapter module **100**. The mobile device **150** collects all pending AuthGrants that may be one or more depending on how many adapter modules **100** are in-range. Unused AuthGrants that expire are purged from the mobile device **150** and the server **130**. It is important to note that the mobile device **150** is unable to read the AuthGrant because it is encrypted with the adapter module's unique private key that is only known to server **130** and adapter module **100**. This provides a preferred key element of security in the system as the adapter module **100** only trusts AuthGrants that are issued by the server **130**, and the AuthGrants cannot be read or modified by the mobile device **150** or any other party in between the server and the adapter module **100**. Additional mobile devices **150** may enter the authorization zone **104** (block **308**).

As the user approaches a specific adapter module **100**, the user enters the payment zone **102** and an event threshold is triggered based on heuristics performed by the mobile device **150**. Blocks **310** and **312** show the loop steps of waiting for a mobile device **150** from the authorization zone **104** to enter the payment zone **102**. If the user leaves the authorization zone **104** without entering the payment zone **102**, the adapter module **100** returns to advertising its presence (block **300**).

FIGS. **8**C and **9**B generally show the user entering the payment zone. The mobile device **150** verifies that it has an unexpired and valid AuthGrant. If the AuthGrant is not good, it may be requested again, repeating the Authorization Request process (block **315**). If the AuthGrant is good, the mobile device **150** sends the valid AuthGrant (including the wallet balance (block **322**)) to the adapter module **100** to initiate a transaction. The mobile device **150** may issue the AuthGrant automatically without specific user interaction if the hands-free mode is supported (and the device is a favorite (block **318**), there is only one device in the payment zone **102** (block **318**), and (optionally) there is only one user in the authorization zone **104** (block **320**). If any of these factors are not present, the mobile device **150** will prompt and/or wait for the user to begin the transaction manually (block **324**).

FIGS. **8**D, **9**C, and **9**D generally show the transaction process. As shown in FIG. **9**C, the adapter module **100** runs through a series of questions to determine if there are any issues that would prevent vending including: has the user canceled in-app? (block **326**), has the user walked away? (block **328**), is the coin return pressed? (block **330**), has more than a predetermined period of time elapsed? (block **332**). If the answer to any of these questions is "yes," the transaction does not proceed. If the answers to all of these questions is "no," the user makes a selection (block **334**) on the payment accepting unit **120** in the same or similar manner as compared to if cash or credit were presented to the payment accepting unit **120**. If the machine **120** is able to vend (block **336**), it attempts to release the product. If the vend fails (block **338**) it is reported by the machine (block **340**) and a credit is returned to the virtual wallet (block **342**). If the vend is successful (block **338**) it is reported by the machine (block **344**). Put another way, after the transaction is complete, the adapter module **100** returns to the mobile device **150** the details of the transaction as well as an encrypted packet containing the vend details to be sent to the server **130** via the mobile device **150**. Optionally, the adapter module **100** can pass additional information not directly related to the transaction such as payment accepting unit health, sales data, error codes, etc.

FIGS. **8**D and **9**E generally show the multi-vend function. If the machine has enabled multi-vend capabilities (block **350**) and the multi-vend limit has not been reached, the process returns to the question of whether the user is in the payment zone (block **310** of FIG. **9**A). If the machine does not have enabled multi-vend capabilities (block **350**) or the multi-vend limit has been reached, the wallet is decremented by the vend amount(s) and "change" is returned to the virtual wallet (block **354**) and the process ends (block **356**).

FIG. **8**E is a schematic flow diagram of an example login process. FIG. **8**F is a schematic flow diagram of an example boot-up process. FIG. **8**G is a schematic flow diagram of an example account check/update process.

Several of the figures are flow charts (e.g., FIGS. **9**A-**9**E) illustrating methods and systems. It will be understood that each block of these flow charts, components of all or some of the blocks of these flow charts, and/or combinations of blocks in these flow charts, may be implemented by software (e.g., coding, software, computer program instructions, software programs, subprograms, or other series of computer-executable or processor-executable instructions), by hardware (e.g., processors, memory), by firmware, and/or a combination of these forms. As an example, in the case of software, computer program instructions (computer-readable program code) may be loaded onto a computer to produce a machine, such that the instructions that execute on the computer create structures for implementing the functions specified in the flow chart block or blocks. These computer program instructions may also be stored in a memory that can direct a computer to function in a particular

manner, such that the instructions stored in the memory produce an article of manufacture including instruction structures that implement the function specified in the flow chart block or blocks. The computer program instructions may also be loaded onto a computer to cause a series of operational steps to be performed on or by the computer to produce a computer implemented process such that the instructions that execute on the computer provide steps for implementing the functions specified in the flow chart block or blocks. Accordingly, blocks of the flow charts support combinations of steps, structures, and/or modules for performing the specified functions. It will also be understood that each block of the flow charts, and combinations of blocks in the flow charts, may be divided and/or joined with other blocks of the flow charts without affecting the scope of the invention. This may result, for example, in computer-readable program code being stored in whole on a single memory, or various components of computer-readable program code being stored on more than one memory.

Additional Implementations

FIG. **23** illustrates a schematic flow diagram of a process **1000** of authenticating a user to perform a transaction in the payment processing system in accordance with some implementations. In some implementations, the payment processing system includes one or more payment modules **100** (e.g., each associated with a respective payment accepting unit **120** such an automatic retailing machine for dispensing goods and/or services), one or more mobile devices **150** (e.g., each executing the application **140** for the payment processing system either as a foreground or background process), and the server **130**. The server **130** manages the payment processing system and, in some cases, is associated with an entity that supplies, operates, and/or manufactures the one or more payment modules **100**. For brevity, the process **1000** will be described with respect to a respective payment module **100** and a respective mobile device **150** in the payment processing system.

The payment module **100** broadcasts (**1002**), via a short-range communication capability (e.g., BLE), a packet of information (sometimes also herein called "advertised information"). The packet of information at least includes an authorization code and an identifier associated with the payment module **100** (module ID). In some implementations, the packet of information further includes a firmware version of the payment module **100** and one or more status flags corresponding to one or more states of the payment module **100** and/or the payment accepting unit **120**. The information included in the packet broadcast by the payment module **100** is further discussed below with reference to FIG. **24**A.

In some implementations, the payment module **100** sends out a unique authorization code every X seconds (e.g., 100 ms, 200 ms, 500 ms, etc.). In some implementations, the unique authorization codes are randomly or pseudo-randomly generated numbers. In some implementations, the payment module **100** stores broadcasted authorization codes until a received authorization grant token matches one of the stored authorization codes. In some implementations, the payment module **100** stores broadcasted authorization codes for a predetermined amount of time (e.g., Y minutes) after which time an authorization code expires and is deleted. In some implementations, the authorization code is encrypted with a shared secret key known by the server **130** but unique to the payment module **100**. In some implementations, the payment module **100** initializes a random number and then the authorization codes are sequential counts from this random number. In such implementations, the payment module **100** stores the earliest valid (unexpired) counter without a need to store every valid authorization code. In some implementations, the authentication code included in the broadcast packet of information is a hash value of the randomly or pseudo-randomly generated number or the sequential number.

The mobile device **150** receives the broadcasted packet of information, and the mobile device **150** sends (**1004**), via a long-range communication capability (e.g., GSM, CDMA, Wi-Fi, or the like), an authorization request to the server **130**. For example, an application **140** that is associated with the payment processing system is executing as a foreground or background process on the mobile device **150**. In this example, the application **140** receives the broadcasted packet of information when the mobile device **150** is within the communication zone of the payment module **100** (i.e., BLE range) and either automatically sends the authorization request to the server **130** or sends the authorization request to the server **130** when the mobile device **150** is within the authorization zone of the payment module **100**. In some implementations, the broadcasted packet of information includes a baseline authorization zone threshold (i.e., an authorization zone criterion) indicating a baseline RSSI that the mobile device **150** (or the application **140**) is required to observe before being within the authorization zone of the payment module **100**. In some implementations, the mobile device **150** (or the application **140**) offsets the baseline authorization zone threshold based on the strength and/or reception of the short-range communication capability (e.g., BLE radio/transceiver) of the mobile device **150**. In some implementations, the authorization request at least includes the authorization code which was included in the broadcasted packet of information, an identifier associated with the user of the mobile device **150** or the user account under which the user of the mobile device **150** is logged into the application **140** (user ID), and the identifier associated with the payment module **100** (module ID). In some implementations, the authentication code included in authorization request is the hash value in cleartext. The authorization request is further discussed below with reference to FIG. **24**B.

After receiving the authorization request, the server **130** processes (**1006**) the authorization request. In some implementations, the server **130** decrypts the authorization code included in the authorization request with the shared secret key corresponding to the payment module **100**. In some implementations, the server **130** determines whether the user associated with the user ID in the authorization request has sufficient funds in his/her account for the payment processing system to perform a transaction at the machine **120** that is associated with the payment module **100** corresponding to the module ID in the authorization request.

The server **130** sends (**1008**), via a long-range communication capability (e.g., GSM, CDMA, Wi-Fi, or the like), an authorization grant token to the mobile device **150**. In some implementations, the server **130** does not send the authorization grant token if the authorization code in the authorization request cannot be decrypted with the shared secret key corresponding to the payment module **100** (e.g., the authorization code is corrupted or hacked). In some implementations, the server **130** does not send the authorization grant token if the user associated with the user ID in the authorization request does not have sufficient funds in his/her account. In some implementations, in addition to the authorization grant token, the server **130** sends a message

directly to the mobile device **150** which is not encrypted with the shared secret key corresponding to the payment module **100**. After receiving the message, the mobile device **150** displays an appropriate message to the user such as insufficient balance or declined authorization. In some implementations, the server **130** sends an authorization grant token for an amount equal to zero; in which case, the payment module **100** interprets this as a declined or failed authorization which can result for any number of reasons including, but not limited to, insufficient balance or credit.

The mobile device **150** receives the authorization grant token, and, subsequently, the mobile device **150** detects (**1010**) a trigger condition. In some implementations, the mobile device **150** (or the application **140**) detects the trigger condition via the hand-free mode (e.g., upon entrance into the payment zone of the payment module **100**) or manual mode (e.g., interacting with the user interface of the application **140** to initiate a transaction with the payment accepting unit associated with the payment module **100**).

In some implementations, unused authorization grants (e.g., if there was no trigger condition or it expired) are canceled by the mobile device **150** by sending a cancellation message to the server **130** corresponding to the unused authorization grant. In some implementations, the server **130** denies or limits the number of authorization grants sent to the mobile device **150** until it has received transaction information or cancellation of authorization outstanding authorization grants sent to the mobile device **150**.

In response to detecting the trigger condition, the mobile device **150** sends (**1012**), via a short-range communication capability (e.g., BLE), the authorization grant token to the payment module **100**. Subsequently, the machine **120** displays credit to the user (e.g., via one of the displays **122** or **124** shown in FIG. **19**) and the user interacts with the input mechanisms of the machine **120** (e.g., via the buttons **126** or a touch screen display **124** shown in FIG. **19**) to purchase products and/or services.

FIG. **24**A illustrates a block diagram of a packet **1100** of information broadcast by the payment module **100** (e.g., in step **1002** of the process **1000** in FIG. **23**) in accordance with some implementations. In some implementations, the packet **1100** at least includes: module ID **1102** and authorization code **1104**. In some implementations, the packet **110** additional includes: a firmware version **1106** and one or more status flags **1108**.

In some implementations, the module ID **1102** is a unique identifier corresponding to the payment module **100** (sometimes also herein called the "adapter module **100**") that broadcast the packet **1100**.

In some implementations, the authorization code **1104** is a hash value in cleartext. In some implementations, the payment module **100** randomly or pseudo-randomly generates a number or determines a sequential number (See step **1002** of process **1000** in FIG. **23**) and performs a predetermined hash function (e.g., SHA-256) on the number to produce the hash value as the authorization code **1104**. In some implementations, the authorization code **1104** is a unique code that is encrypted with a secret encryption key corresponding to the payment module **100**. The secret encryption key is shared with the server **130**, which enables the server **130** to decrypt the authorization code **1104** and encrypt the authorization grant token but not the mobile device **150**. In some implementations, the encryption between server **130** and payment module **100** is accomplished by two pairs of public/private keys.

In some implementations, the firmware version information **1106** identifies a current firmware version **1112** of the payment module **100**. In some implementations, the firmware version information **1106** also includes update status information **1114** indicating one or more packets received by the payment module **100** to update the firmware or one or more packets needed by the payment module **100** to update the firmware. In some implementations, the one or more status flags **1108** indicate a state of the payment module **100** and/or the payment accepting unit **120** associated with the payment module **100**. In some implementations, the one or more status flags **1108** indicate a state of the payment module **100** such upload information indicator **1116** indicating that that the payment module **100** has information to be uploaded to the server **130** (e.g., transaction information for one or more interrupted transactions). In some implementations, upload information indicator **1116** triggers the mobile device **150** to connect to payment module **100** immediately (e.g., if it has interrupted transaction information to be uploaded to the server **130**). In some implementations, the one or more status flags **1108** indicate a state of the payment accepting unit **120** including one or more of an error indicator **1118** (e.g., indicating that a bill and/or coin acceptor of the payment accepting unit **120** is experiencing a jam, error code, or malfunction), a currency level indicator **1120** (e.g., indicating that the level of the bill and/or coin acceptor reservoir of the payment accepting unit **120** is full or empty), and/or inventory level(s) indicator **1122** (e.g., indicating that one or more products of the payment accepting unit **120**. In some implementations, the one or more status flags **1108** are error codes issued by payment accepting unit **120** over the MDB.

In some implementations, the zone criteria information **1110** specifies an authorization zone criterion **1124** (e.g., a baseline authorization zone threshold indicating a baseline RSSI that the mobile device **150** (or the application **140**) is required to observe before being within the authorization zone of the payment module **100**) and/or a payment zone criterion **1126** (e.g., a baseline payment zone threshold indicating a baseline RSSI that the mobile device **150** (or the application **140**) is required to observe before being within the payment zone of the payment module **100**). In some implementations, the baseline authorization zone threshold and the baseline payment zone threshold are default values determined by the server **130** or stored as variables by the application **140**, in which case the authorization zone criterion **1124** and payment zone criterion **1126** are offsets to compensate for the strength and/or reception of the short-range communication capability (e.g., BLE radio/transceiver) of the payment module **100**. Alternatively, zone criteria information **1110** includes a spread between the baseline authorization zone threshold and the baseline payment zone threshold. Thus, the mobile device **150** (or the application **140**) determines the baseline authorization zone threshold and the baseline payment zone threshold based on the spread value and a default value for either the baseline authorization zone threshold or the baseline payment zone threshold. For example, the spread indicates −10 db and the default baseline payment zone threshold is −90 db; thus, the baseline authorization zone threshold is −80 db. Continuing with this example, after determining the baseline authorization zone threshold and the baseline payment zone threshold, the mobile device **150** (or the application **140**) may further adjust the authorization zone threshold and/or the payment zone threshold based on the strength and/or reception of its short-range communication capability (i.e., BLE radio/transceiver).

FIG. **24**B is a block diagram of an authorization request **1130** sent by the mobile device **150** to the server **130** (e.g.,

in step **1004** of the process **1000** in FIG. **23**) in accordance with some implementations. In some implementations, the authorization request **1130** at least includes: a module ID **1102**, a user ID **1134**, and an authorization code **1104**.

In some implementations, the module ID **1102** is a unique identifier corresponding to the payment module **100** that broadcast the **1100** that included the authorization code **1104**.

In some implementations, the user ID **1134** is an identifier associated with the user of the mobile device **150** sending the authorization request **1130** to the server **130**. In some implementations, the user ID **1134** is associated with the user account under which the user of the mobile device **150** is logged into the application **140**.

In some implementations, the authorization code **1130** includes the authorization code **1104** included in the packet **1100** of information that was broadcast by the payment module **100**.

FIG. **24**C is a block diagram of an authorization grant token **1140** sent by the server **130** to the mobile device **150** (e.g., in step **1008** of the process **1000** in FIG. **23**) in accordance with some implementations. In some implementations, in accordance with a determination that the authorization code **1136** included in the authorization request **1130** from the mobile device **150** is valid and that the user associated with the mobile device **150** has sufficient funds in his/her account for the payment processing system, the server **130** generates the authorization grant token **1140**. In some implementations, the authorization grant token **1140** at least includes: a module ID **1102**, a user ID **1134**, an authorized amount **1146**, (optionally) an expiration period offset **1148**, and (optionally) the authorization code **1104**.

In some implementations, the module ID **1102** is a unique identifier corresponding to the payment module **100** that broadcast the packet **1100** that included the authorization code **1104**.

In some implementations, the user ID **1134** is an identifier associated with the user of the mobile device **150** that sent the authorization request **1130** to the server **130**.

In some implementations, the authorized amount **1146** indicates a maximum amount for which the user of the mobile device **150** is authorized for a transaction using the authorization grant token **1140**. For example, the authorized amount **1146** is predefined by the user of the mobile device **150** or by the server **130** based on a daily limit or based on the user's total account balance or based on a risk profile of the user correspond to the user ID **1134**.

In some implementations, the expiration period **1148** offset indicates an offset to the amount of time that the payment module **100** holds the authorization grant token **1140** valid for initiation of a transaction with the machine **120** associated with the payment module **100**. For example, the expiration period offset **1148** depends on the history and credit of the user of mobile device **150** or a period predefined by the user of mobile device **150**.

In some implementations, the authorization grant token **1140** further includes the authorization code **1104** that was included in the authorization request **1130**. In some implementations, when the authorization code **1104** is the hash value, the server **130** encrypts the authorization grant token **1140** including the hashed value with the shared secret encryption key associated with payment module **100**. Subsequently, when mobile device **150** sends the authorization grant token **1140** to payment module **100** after detecting a trigger condition, the payment module **100** decrypts the authorization grant token **1140** using the secret key known only to server **130** and payment module **100** (which authenticates the message and the authorization grant), and then matches the hash value included in the decrypted authorization grant token **1140** to previously broadcast valid (unexpired) hash values (i.e., auth codes) to determine validity of the (which was known only by payment module **100**).

FIG. **24**D illustrates a block diagram of transaction information **1150** generated by the payment module **100** (e.g., in step **1254** of the process **1250** in FIG. **25**B) in accordance with some implementations. In some implementations, the transaction information **1150** includes: a transaction ID **1152** for the respective transaction, a module ID **1154**, a user ID **1156**, (optionally) the authorization code **1158**, transaction status information **1160**, the transaction amount **1162**, and other information **1164**.

In some implementations, the transaction ID **1152** is a unique identifier corresponding to the respective transaction. In some implementations, the transaction ID **1152** is encoded based on or associated with the time and/or date on which and the location at which the respective transaction took place.

In some implementations, the module ID **1154** is a unique identifier corresponding to the payment module **100** that performed the respective transaction.

In some implementations, the user ID **1156** is an identifier associated with the user of the mobile device **150** that initiated the respective transaction.

In some implementations, the authorization code **1158** corresponds to the original authorization code (e.g., auth code **1104**, FIGS. **24**A-**24**C) and/or authorization grant token (e.g., auth grant token **1140**, FIG. **24**C) that was used to initiate the respective transaction. In some implementations, the authorization code **1156** is encrypted with a unique encryption key corresponding to the payment module **100**.

In some implementations, the transaction status information **1160** includes an indication whether the respective transaction was completed, not-completed, or aborted. For example, the respective transaction is incomplete if a jam occurred at the payment accepting unit **120** and the user did not receive the product associated with the respective transaction. For example, if the user walks away from the payment accepting unit **120** after money was credited for the respective transaction, the respective transaction is aborted. In another example, if respective transaction times out after a predetermined time period because the user failed to select a product at the payment accepting unit **120**, the respective transaction is aborted. In another example, if the user actuates a bill or coin return mechanism of the payment accepting unit **120**, the respective transaction is aborted.

In some implementations, the transaction amount **1162** indicates the amount of the respective transaction or the amount of each of multiple transactions (e.g., in a multi-vend scenario). In some implementations, the transaction amount **1162** is encrypted with a unique encryption key corresponding to the payment module **100**.

In some implementations, the other information **1164** includes other information related to the respective transaction such as the items dispensed by the payment accepting unit **120** and the type of transaction (e.g., coins, bills, credit card, manual mode, hands-free mode, etc.). In some implementations, the other information **1164** includes other information related to the payment module **100** and/or the payment accepting unit **120** associated with the payment module **100**. For example, the other information **1164** includes a verification request to the server **130** in order to implement new firmware. In another example, the other information **1164** includes transaction information from one or more previous interrupted transactions. In another

example, the other information **1164** includes transaction information for one or more transactions paid via bills and/or coins. In another example, the other information **1164** includes inventory information as to one or more products of the payment accepting unit **120**.

FIG. **25**A illustrates a schematic flow diagram of a process **1200** for providing a representation of a machine event at a mobile device in accordance with some implementations. In some implementations, the payment processing system includes one or more payment modules **100** (e.g., each associated with a respective payment accepting unit **120** such an automatic retailing machine for dispensing goods and/or services), one or more mobile devices **150** (e.g., each executing the application **140** for the payment processing system either as a foreground or background process), and the server **130**. The server **130** manages the payment processing system and, in some cases, supplies, operates, and/or manufactures the one or more payment modules **100**. For brevity, the process **1200** will be described with respect to a respective payment module **100** associated with a respective payment accepting unit **120** (sometimes also herein called the "machine **120**") and a respective mobile device **150** in the payment processing system.

In some implementations, the process **1200** occurs after the mobile device **150** sends the AuthGrant in FIG. **8**C. In some implementations, the process **1200** occurs after the mobile device **150** sends the authorization grant to the payment module **100** in operation **1012** of process **1000** in FIG. **23**.

The payment module **100** obtains (**1202**) an indication corresponding to an event at the machine **120**. For example, after the process **1000** in FIG. **23**, the user of the mobile device **150** selects a product to purchase from the machine **120** by interacting with one or more input mechanisms of the machine **120** (e.g., buttons **126** or a touch screen display **124** shown in FIG. **19**), and the machine **120** dispenses the selected product. Continuing with this example, after the product is dispensed, the transaction is complete and the payment module **100** obtains an indication from the machine of the completed transaction. In some implementations, the indication includes the amount of the transaction and (optionally) machine status information associated with the machine **120** such as inventory information as to one or more products of the payment accepting unit **120** and/or the like. In some implementations, the indication includes status information indicating that the transaction was aborted (e.g., via actuation of a coin return mechanism at the machine **120**) or that there was an error with the transaction (e.g., a vending jam or other malfunction with the machine **120**).

After obtaining the indication corresponding to completion of the first transaction, the payment module **100** generates (**1204**) a notification corresponding to the event at the machine **120**.

The payment module **100** sends (**1206**), via a short-range communication capability (e.g., BLE), the notification to the mobile device **150**. In some embodiments, in addition to the notification corresponding to the event at machine **120**, the payment module **100** sends a promotion or advertisement to the mobile device **150** that is targeted to the user of the mobile device **150** based on the transaction or the user ID included in the AuthGrant or authorization grant token that initiated the transaction. In some embodiments, in addition to the notification corresponding to the event at machine **120**, the payment module **100** sends a pseudo randomly selected promotion or advertisement to the mobile device **150** that is selected from a set of promotions or advertisements stored by the payment module **100**. For example, the promotion is a coupon for a free soda following the purchase of ten sodas from the machine **120** by the user of the mobile device **150**. For example, the promotion is a random 50% off coupon or free soda coupon. For example, the transaction corresponds to a vended soda and the advertisement corresponds to a new soda from the same company that produces the vended soda.

The mobile device **150** provides (**1208**) a representation of the notification. For example, in FIG. **26**A, the mobile device **150** displays user interface **1302** on touch screen **152** with a message **1306** that indicates that the first transaction is complete. For example, in FIG. **26**C, the mobile device **150** displays user interface **1320** on touch screen **152** with a message **1322** that indicates that the transaction was aborted. For example, in FIG. **26**D, the mobile device **150** displays user interface **1330** on touch screen **152** with a message **1332** that indicates that there was an error with the transaction. For example, the mobile device **150** also displays a representation of the promotion of advertisement on the user interface for the application **140**.

FIG. **25**B illustrates a schematic flow diagram of a process **1250** for processing acknowledgement information in accordance with some implementations. In some implementations, the payment processing system includes one or more payment modules **100** (e.g., each associated with a respective payment accepting unit **120** such an automatic retailing machine for dispensing goods and/or services), one or more mobile devices **150** (e.g., each executing the application **140** for the payment processing system either as a foreground or background process), and the server **130**. The server **130** manages the payment processing system and, in some cases, supplies, operates, and/or manufactures the one or more payment modules **100**. For brevity, the process **1250** will be described with respect to a respective payment module **100** associated with a respective payment accepting unit **120** (machine **120**) and a respective mobile device **150** in the payment processing system.

In some implementations, the process **1250** occurs after the mobile device **150** sends the AuthGrant in FIG. **8**C. In some implementations, the process **1250** occurs after the mobile device **150** sends the authorization grant to the payment module **100** in operation **1012** of process **1000** in FIG. **23**.

The payment module **100** obtains (**1252**) an indication corresponding to completion of a first transaction from the machine **120**. For example, after the process **1000** in FIG. **23**, the user of the mobile device **150** selects a product to purchase from the machine **120** by interacting with one or more input mechanisms of the machine **120** (e.g., buttons **126** or a touch screen display **124** shown in FIG. **19**), and the machine **120** dispenses the selected product. Continuing with this example, after the product is dispensed, the transaction is complete and the payment module **100** obtains an indication from the machine of the completed transaction. In some implementations, the indication includes the amount of the transaction and (optionally) machine status information associated with the machine **120** such as inventory information as to one or more products of the payment accepting unit **120** and/or the like.

After obtaining the indication corresponding to completion of the first transaction, the payment module **100** generates (**1254**) a first notification with first transaction information based on the indication, and the payment module **100** stores the first transaction information. In some implementations, the first transaction information includes a transaction ID for the first transaction, a module ID corresponding to payment module **100**, a user ID corresponding to the

mobile device **150**, transaction status information indicating that the first transaction is complete, and the transaction amount indicated by the indication. In some implementations, the payment module **100** retains the authorization code included in the original broadcasted packet and/or the authorization grant token and includes the authorization code in the first transaction information. In some implementations, the authorization code is encrypted with a secret key corresponding to the payment module **100**, which is shared with the server **130** but not the mobile device **150**. In some implementations, the first transaction information further includes other information such as the machine status information included in the first notification or transaction information corresponding to previous interrupted transaction(s). See FIG. **24**D and the accompanying text for further discussion regarding transaction information **1150**.

The payment module **100** sends (**1256**), via a short-range communication capability (e.g., BLE), the first notification with first transaction information to the mobile device **150**. In some embodiments, in addition to first transaction information corresponding to completion of the first transaction at machine **120**, the first notification includes a promotion or advertisement to the mobile device **150** that is targeted to the user of the mobile device **150** based on the transaction or the user ID included in the AuthGrant or authorization grant token that initiated the transaction. In some embodiments, in addition to first transaction information corresponding to completion of the first transaction at machine **120**, the first notification includes a pseudo randomly selected promotion or advertisement to the mobile device **150** that is selected from a set of promotions or advertisements stored by the payment module **100**. For example, the promotion is a coupon for a free soda following the purchase of ten sodas from the machine **120** by the user of the mobile device **150**. For example, the promotion is a random 50% off coupon or free soda coupon. For example, the transaction corresponds to a vended soda and the advertisement corresponds to a new soda from the same company that produces the vended soda.

The mobile device **150** provides (**1258**) a representation of the first notification. For example, in FIG. **26**A, the mobile device **150** displays user interface **1302** on touch screen **152** with a message **1306** that indicates that the first transaction is complete. For example, the mobile device **150** also displays a representation of the promotion of advertisement on the user interface for the application **140**.

The mobile device **150** sends (**1260**), via a long-range communication capability (e.g., GSM, CDMA, Wi-Fi, or the like), the first transaction information to the server **130**.

The server **130** processes (**1262**) the first transaction information. For example, the server **130** debits the account of the user associated with the user ID in the first transaction information in the amount indicated by the first transaction information.

The server **130** sends (**1264**), via a long-range communication capability (e.g., GSM, CDMA, Wi-Fi, or the like), first acknowledgment information to the mobile device **150**. In some implementations, the first acknowledgment information acknowledges that the server **130** received the first transaction information. In some implementations, the first acknowledgment information includes the user ID, the module ID, the transaction ID, and (optionally) the authorization grant included in the transaction information (e.g., auth grant **1158**, FIG. **24**D).

After receiving the first acknowledgement information, the mobile device **150** sends (**1266**), via a short-range communication capability (e.g., BLE), the first acknowledgment information to the payment module **100**.

After receiving the first acknowledgment information, the payment module **100** deletes (**1268**) the stored first transaction information.

Attention is now directed towards implementations of user interfaces and associated processes that may be implemented on the mobile device **150** with zero or more speakers, zero or more microphones, and a display. For example, the display is a touch screen (sometimes also herein called a "touch screen display") enabled to receive one or more contacts and display information (e.g., media content, websites and web pages thereof, user interface for the application **140**, and/or user interfaces for applications). FIGS. **26**A-**26**D illustrate example user interfaces for providing a representation of a machine event at a mobile device in accordance with some implementations.

FIGS. **26**A-**26**D show user interfaces displayed on mobile device **150** (e.g., a mobile phone); however, one skilled in the art will appreciate that the user interfaces shown in FIGS. **26**A-**26**D may be implemented on other similar computing devices. The user interfaces in FIGS. **26**A-**26**D are used to illustrate the processes described herein, including the process described with respect to FIGS. **25**A-**25**B and **27**A-**27**B.

For example, a user of the mobile device **150** approaches a machine **120** (e.g., vending machine **78**×**928** as shown in FIGS. **10**A-**10**D) and executes application **140** on the mobile device **150** so as to perform an electronic transaction with the machine **120**. For example, with reference to FIGS. **10**C-**10**D, the user of the mobile device **150** initiates a transaction with the machine **120** (e.g., vending machine **78**×**928**) by performing a swipe gesture at a location corresponding to the representation of the dollar bill (e.g., a substantially vertical swipe gesture from a location corresponding to the representation of the dollar bill to the top edge of the mobile device **150**).

FIG. **26**A illustrates the mobile device **150** displaying a user interface **1302** of the application **140** on touch screen **152** after the user of the mobile device **150** initiates and performs a transaction with the machine **120**. In FIG. **26**A, the user interface **1302** includes prepaid balance **1304** which indicates that $1.00 has been deducted from the prepaid balance after performing a transaction with the machine **120** as compared to the prepaid balance in FIG. **10**C-**10**D (i.e., $9.00 in FIGS. **10**C-**10**D and $8.00 in FIG. **26**A). In FIG. **26**A, the user interface **1302** also includes a message **1306** indicating that the transaction with the machine **120** is complete.

FIG. **26**B illustrates the mobile device **150** displaying a user interface **1310** of the application **140** on touch screen **152** after the user of the mobile device **150** initiates a transaction with the machine **120** and an error with the transaction occurs or the transaction is aborted. In FIG. **26**B, the user interface **1310** shows the representation of the dollar bill sliding onto the touch screen **152** (e.g., in a substantially top to bottom manner). In FIG. **26**B, the interface **1310** includes prepaid balance **1312** which indicates that no money has been deducted from the prepaid balance after performing a transaction with the machine **120** as compared to the prepaid balance in FIG. **10**C-**10**D (i.e., $9.00 in FIGS. **10**C-**10**D and $9.00 in FIG. **26**B).

FIG. **26**C illustrates the mobile device **150** displaying a user interface **1320** of the application **140** on touch screen **152** after the representation of the dollar bill slides onto the touch screen **152** in FIG. **26**B due to the transaction being aborted. For example, the user aborts the transaction by actuating a coin return mechanism of the machine **120**. In another example, the user aborts the transaction by selection

an abort affordance on the interface of the application **140** (not shown). In FIG. **26**C, the user interface **1320** includes a message **1322** indicating that the transaction with the machine **120** was aborted and that the user's account was not debited for the aborted transaction.

FIG. **26**D illustrates the mobile device **150** displaying a user interface **1330** of the application **140** on touch screen **152** after the representation of the dollar bill slides onto the touch screen **152** in FIG. **26**B due to the occurrence of an error with the transaction. For example, a malfunction with the machine **120** (e.g., a vending jam or stuck item) causes the error to occur. In FIG. **26**D, the user interface **1330** is associated with the application **140** executed on the mobile device **150**. In FIG. **26**D, the user interface **1330** includes a message **1332** indicating that an error occurred during the transaction with the machine **120** and that the user's account was not debited for the transaction.

FIGS. **27**A-**27**B illustrate a flowchart diagram of a method **1400** of presenting representations of payment accepting unit events in accordance with some implementations. In some implementations, the method **1400** is performed by a device with one or more processors, memory, one or more output devices, and two or more communication capabilities. For example, in some implementations, the method **1400** is performed by the mobile device **150** (FIGS. **5** and **21**) or a component thereof (e.g., the application **140**). In some implementations, the method **1400** is governed by instructions that are stored in a non-transitory computer readable storage medium (e.g., the memory **860**, FIG. **21**) and the instructions are executed by one or more processors (e.g., the processing unit **850**, FIG. **21**) of the device. Optional operations are indicated by dashed lines (e.g., boxes with dashed-line borders).

After sending a request to a payment module via a first communication capability transaction to initiate a transaction with a payment accepting unit (e.g., an offline-payment operated machine such as a vending machine or kiosk) associated with the payment module, the mobile device obtains (**1402**) a notification from the payment module via the first communication capability, where the notification indicates an event at the payment accepting unit associated with the payment module. In some implementations, method **1400** occurs after the mobile device **150** sends the AuthGrant in FIG. **8**C. In some implementations, method **1400** occurs after the mobile device **150** sends the authorization grant to the payment module **100** in operation **1012** of process **1000** in FIG. **23**. Operation **1206** of FIG. **25**A, for example, shows the mobile device **150** receiving a notification sent by the payment module **100** (e.g., the adapter module **100**, FIGS. **5** and **20**) sent via the first communication capability (e.g., a short-range communication technology/protocol such as BLE). The notification indicates an event at the payment accepting unit (e.g., the payment accepting unit **120**, FIGS. **5** and **19**) (sometimes also herein called "machine **120**") associated with the payment module **100**.

In some implementations, the first communication capability corresponds (**1404**) to a short-range communication protocol. As described above, the short-range communication protocols include BLE, NFC, and/or other protocols utilizing non-persistent communication channels.

In response to obtaining the notification, the mobile device provides (**1406**) a representation of the notification to a user of the mobile device via the one or more output devices of the mobile device. For example, in FIG. **26**A, the mobile device **150** displays user interface **1302** on touch screen **152** with a message **1306** that indicates that the first transaction is complete. For example, in FIG. **26**C, the mobile device **150** displays user interface **1320** on touch screen **152** with a message **1322** that indicates that the transaction was aborted. For example, in FIG. **26**D, the mobile device **150** displays user interface **1330** on touch screen **152** with a message **1332** that indicates that there was an error with the transaction.

In some implementations, the one or more output devices of the mobile device include (**1408**) at least one of: a display, one or more speakers, one or more LEDs, and a vibration mechanism. For example, the mobile device **150** includes one or more of a display (e.g., the touch screen **152**, FIGS. **10**A-**10**D), one or more speakers, one or more LEDs, and a vibration mechanism.

In some implementations, the representation of the notification is at least one of (**1410**): a message displayed on the display of the mobile device; a banner notification displayed on a display of the mobile device; a vibration alert from the vibration mechanism of the mobile device; an aural alert from the one or more speakers of the mobile device; and a visual alert from the one or more LEDs of the mobile device. For example, in FIGS. **26**B-**26**D, the representation of the notification includes messages **1306**, **1322**, and **1332** displayed on the touch screen **152** of the mobile device **150**. In another example, the representation of the notification is a predefined sequence of vibrations provided by the vibration mechanism of the mobile device **150**. In another example, the representation of the notification is a predefined sequence of tones provided by the one or more speakers of the mobile device **150**. In another example, the representation of the notification is a predefined sequence of blinking LEDs of the mobile device **150**.

In some implementations, the notification indicates (**1412**) abortion of a transaction initiated by the user of the mobile device. In FIG. **26**C, for example, the user interface **1320** includes the message **1322** indicating that the transaction has been aborted. For example, the user aborts the transaction by actuating a coin return mechanism of the machine **120**. In another example, the user aborts the transaction by selection an abort affordance on the interface of the application **140** (not shown).

In some implementations, the notification indicates (**1414**) completion of a transaction between the user of the mobile device and the payment accepting unit. In FIG. **26**A, for example, the user interface **1302** includes the message **1306** indicating that completion of the transaction with the machine **120** initiated by the user of the mobile device **150**.

In some implementations, the notification indicating completion of the transaction at least includes (**1416**) an amount of the completed transaction. In FIG. **26**A, for example, the user interface **1302** includes prepaid balance **1304** which indicates that $1.00 has been deducted from the prepaid balance after performing a transaction with the machine **120** as compared to the prepaid balance in FIG. **10**C-**10**D (i.e., $9.00 in FIGS. **10**C-**10**D and $8.00 in FIG. **26**A).

In some implementations, the mobile device sends (**1418**) at least a portion of the notification to a server via a second communication capability distinct from the first communication capability. Operation **1260** of FIG. **25**B, for example, shows the mobile device **150** sending first transaction information to the server **130** for a completed transaction via the second communication capability (e.g., a long-range communication protocols such as Wi-Fi, CDMA, GSM, and/or the like). For example, the first transaction information at least includes the amount of the first completed transaction.

In some implementations, the first communication capability corresponds (**1420**) to a short-range communication protocol and the second communication capability corresponds to a long-range communication protocol. For example, the first communication capability of the mobile device **150** is a radio/transceiver means for communicating via one or more short-range communication protocols such as BLE, NFC, and/or the like (i.e., a non-persistent communication channel). For example, the second communication capability of the mobile device **150** is a radio/transceiver means for communicating via one or more long-range communication protocols such as Wi-Fi, CDMA, GSM, and/or the like.

In some implementations, the notification indicates (**1422**) failure of a transaction initiated by the user of the mobile device or a malfunction associated with the payment accepting unit. In FIG. **26**D, for example, the user interface **1330** includes the message **1332** indicating that there was an error with the transaction. For example, the transaction fails due to a vending jam or other malfunction. In another example, the payment accepting unit experiences a malfunction due to an open door or the like. In some implementations, at least a portion of the failure/malfunction notification is sent to the sever **130** and an alert is subsequently sent to the operator of the payment accepting unit (e.g., the machine **120**) by the server **130**.

It should be understood that the particular order in which the operations in FIGS. **27**A-**27**B have been described is merely for example purposes and is not intended to indicate that the described order is the only order in which the operations could be performed. One of ordinary skill in the art would recognize various ways to reorder the operations described herein. Additionally, it should be noted that details of other processes described herein with respect to other methods described herein are also applicable in an analogous manner to the method **1400** described above with respect to FIGS. **27**A-**27**B.

FIG. **28**A illustrates a block diagram of an offline-payment operated machine **1500** in accordance with some implementations. For example, the offline-payment operated machine **1500** (e.g., a form of the machine **120**) is an electro-mechanical machine capable of accepting currency (e.g., coins), which is not connected to any networks (e.g., telephone, cellular, or Wi-Fi). For example, the offline-payment operated machine **1500** is a washer or dryer at a laundromat, a parking meter, a car wash payment kiosk, or other offline-payment operated machine that dispenses goods and/or services.

In FIG. **28**A, the offline-payment operated machine **1500** includes a microswitch **1502**, a control unit **1506**, a power supply **1508**, a transistor **1510**, and an operation unit **1512**. The components of the offline-payment operated machine **1500** in FIG. **28**A are examples and one of skill in the art will appreciate that various other components may be included in or excluded from the offline-payment operated machine **1500**.

In FIG. **28**A, the microswitch **1502** is a leveraged microswitch with lever **1504**. For example, the microswitch **1502** is a CHERRY BRAND™ microswitch with a normally open terminal ("NO"), a normally closed terminal ("NC"), and a common terminal. For example, the lever **1504** is incorporated into a coin slot of the offline-payment operated machine **1500** and is depressed whenever a coin slides down the coin slot into a coin reservoir of the offline-payment operated machine **1500** (not shown). For example, when the lever **1504** is depressed and the microswitch **1502** is wired in the NO configuration as shown in FIG. **28**A, the switch is closed. Continuing with this example, when the switch is closed, control unit **1506** receives a pulse (i.e., a payment acceptance signal) from the common terminal of the microswitch **1502** indicating depression of the lever **1504** from the reception of a US quarter (i.e., $0.25) or coin of another value.

In some implementations, when the control unit **1506** receives a preset sequence of payment acceptance signals indicative of a preset number of coins being received by the microswitch **1502**, the control unit **1506** initiates the operation of the offline-payment operated machine **1500**. For example, after receiving the preset sequence of payment acceptance signals (e.g., three pulses indicating reception of three US quarters), the control unit **1506** initiates operation of the offline-payment operated machine **1500** by applying current to the gate of the transistor **1510** which allows current to flow from the power supply **1508** to operation unit **1512**. For example, the operation unit **1512** is a motor of a dryer which begins spinning once current flows from the power supply **1508**.

In FIG. **28**A, payment module **1520** (e.g., a form of the adapter module **100**, FIGS. **5** and **20**) is configured to be installed in the offline-payment operated machine **1500** so as to retrofit the offline-payment operated machine **1500** to be able to accept electronic payments. In some implementations, the payment module **1520** includes all or some of the components included adapter module **100** in FIG. **20** such as processing unit **750**, memory **760**, a security unit **755**, and a communications unit **770**. In some implementations, the payment module **1520** also includes a first interface module **1522**, a second interface module **1524**, and a lead **1536** for drawing power from power supply **1508** of the offline-payment operated machine **1500**.

In FIG. **28**A, the first interface module **1522** is configured to sample payment acceptance signals from the microswitch **1502** (e.g., a coin receiving switch) via lead **1532** of the offline-payment operated machine **1500**. For example, the payment acceptance signals are indicative of a coin being received by the microswitch **1502** which depress lever **1504**. In FIG. **28**A, the second interface module **1524** is configured to sample control signals from the control unit **1506** of the offline-payment operated machine **1500** via lead **1534** that initiate an operation of the offline-payment operated machine (e.g., the application of current to the gate of the transistor **1510**) in response to receiving a preset sequence of payment acceptance signals from the microswitch **1502** (e.g., the coin receiving switch) indicative of the preset number of coins.

FIG. **28**B illustrates signals sampled by the payment module **1520** in accordance with some implementations. In FIG. **28**B, sample **1550** represents a preset sequence of payment acceptance signals sampled by the first interface module **1522** via lead **1532** that are sent from the microswitch **1502** to the control unit **1506**. For example, the preset sequence of payment acceptance signals indicative of the preset number of coins include pulses (i.e., payment acceptance signals) **1552**, **1554**, **1556**, and **1558**. For example, the leading edges of pulses **1552**, **1554**, **1556**, and **1558** at times **1582**, **1584**, **1586**, and **1588** indicate reception of a coin by microswitch **1502** which causes the switch to close when wired in the NO configuration as shown in FIG. **28**A. In FIG. **28**B, sample **1570** represents a control signal sampled by the second interface module **1524** via lead **1534** that is sent from the control unit **1506** to transistor **1510**. In FIG. **28**B, the sample **1570** includes a pulse **1572** that is sent from the control unit **1506** to transistor **1510** at time **1590** after

receiving the preset sequence of payment acceptance signals from the microswitch **1502** (i.e., pulses **1552**, **1554**, **1556**, and **1558**).

FIGS. **29**A-**29**B illustrate a flowchart diagram of a method of retrofitting an offline-payment operated machine to accept electronic payments in accordance with some implementations. In some implementations, the method **1600** is performed by a payment module with one or more processors and memory. In some implementations, the payment module also includes a short-range communication capability corresponding to a short-range communication protocol (e.g., a non-persistent communication channel such as BLE, NFC, and/or the like), where the short-range communication capability is configured to communicate with one or more mobile devices, where each of the one or more mobile devices is configured with a complimentary short-range communication capability and a long-range communication capability corresponding to a long-range communication protocol (e.g., Wi-Fi, CDMA, GSM, and/or the like).

In some implementations, the payment module is coupled with an offline-payment operated machine (e.g., the payment accepting unit **120**, FIGS. **5** and **19** (sometimes also herein called "machine **120**"), or the offline-payment operated machine **1500**, FIG. **28**A) such as dryer or washer in a laundromat, a parking meter, a car wash payment kiosk, or the like. In some implementations, the offline-payment operated machine includes a coin receiving switch (e.g., the microswitch **1502**, FIG. **28**A) and a control unit (e.g., the control unit **1506**, FIG. **28**A). In some implementations, the payment module further includes: (A) a first interface module (e.g., the first interface module **1522**, FIG. **28**A) configured to sample payment acceptance signals from the coin receiving switch of the offline-payment operated machine, where the signals are indicative of a coin being received by the coin receiving switch; and (B) a second interface module (e.g., the second interface module **1524**, FIG. **28**A) configured to sample control signals from the control unit of the offline-payment operated machine that initiate an operation of the offline-payment operated machine in response to receiving a preset sequence of payment acceptance signals from the coin receiving switch indicative of the preset number of coins. By sampling and storing these signals, the payment module **1520** is able to simulate operation of a respective coin receiving switch in response to receiving the correct/preset number of coins so as to trigger operation of the offline-payment operated machine in response to completion of an electronic payment.

For example, in some implementations, the method **1600** is performed by the adapter module **100** (FIGS. **5** and **20**) or payment module **1520** (FIG. **28**A). In some implementations, the method **1600** is governed by instructions that are stored in a non-transitory computer readable storage medium (e.g., the memory **760**, FIG. **20**) and the instructions are executed by one or more processors (e.g., the processing unit **750**, FIG. **20**) of the payment module. Optional operations are indicated by dashed lines (e.g., boxes with dashed-line borders).

In some implementations, the payment module detects (**1602**), via the first interface module, a preset sequence of payment acceptance signals from the coin receiving switch that causes the control unit to initiate the operation of the offline-payment operated machine, where the preset sequence of payment acceptance signals are indicative of a preset number of coins received by the coin receiving switch. For example, with reference to FIGS. **28**A-**28**B, the first interface module **1522** of the payment module **1520** samples payment acceptance signals via lead **1532** from the microswitch **1502** to the control unit **1506**. For example, each of the payment acceptance signals is indicative of reception of a coin by the microswitch **1502**. Continuing with this example, the second interface module **1524** of the payment module **1520** samples control signals via lead **1534** from the control unit **1506** to the transistor **1510**. The payment module **1520** detects a preset sequence of payment acceptance signals from the microswitch **1502** that causes the control unit **1506** to apply a current to the gate of the transistor **1510** (e.g., the control signals). For example, the preset sequence of payment acceptance signals is indicative of a preset number of coins received by the microswitch **1502** to cause operation of the offline-payment operated machine **1500**. For example, the application of current to the gate of the transistor **1510** allows current to flow from the power supply **1508** to the operation unit **1512** so that the operation. For example, the operation unit **1512** is a motor of a dryer which begins spinning once current flows from the power supply **1508**.

In some implementations, the payment module determines (**1604**) the predefined signal sequence to emulate the preset sequence of payment acceptance signals from the coin receiving switch. In some implementations, after detecting the preset sequence of payment acceptance signals that causes the control unit **1506** to initiate the operation of the offline-payment operated machine **1500**, the payment module **1520** determines a predefined signal sequence to emulate the preset sequence of payment acceptance signals. In some implementations, the money value associated with each pulse in the preset sequence of payment acceptance signals from the microswitch **1502**, indicative of the preset number of coins to initiate the operation of the offline-payment operated machine **1500**, is a default currency (e.g., USD) and amount (e.g., $0.25) set in the firmware of the payment module **1520**. In some implementations, the money value associated with the each pulse in the preset sequence of payment acceptance signals from the microswitch **1502**, indicative of the preset number of coins to initiate the operation of the offline-payment operated machine **1500**, is set by the server **130** and can be changed remotely by using the mobile device **150** as a communications bridge to send information indicating the value of a pulse from the server **130** to the mobile device **150** via the second communication capability (e.g., GSM, CDMA, or Wi-Fi) and forwarding the information from the mobile device to the payment module **1520** via the first communication capability (e.g., BLE). For instance, in most cases, each pulse is US $0.25.

In some implementations, determining the predefined signal sequence includes (**1606**) at least one of: identifying a count of pulses in the present sequence of payment acceptance signals; identifying amplitude of pulses in the present sequence of payment acceptance signals; identifying shape of pulses in the present sequence of payment acceptance signals; and identifying an interval between pulses. In some implementations, after detecting the preset sequence of payment acceptance signals (e.g., the sample **1550**, FIG. **28**B), the payment module **1520** determines a predefined signal sequence to emulate the preset sequence of payment acceptance signals by identifying a count of pulses in the preset sequence of payment acceptance signals, an interval between pulses in the preset sequence of payment acceptance signals, the shape of pulses in the preset sequence of payment acceptance signals, and an amplitude of pulses in the preset sequence of payment acceptance signals.

The payment module receives (**1608**) a request via the short-range communication capability from a respective

mobile device to perform an operation of the offline-payment operated machine. For example, with reference to FIG. **8**C, the payment module **1520** (FIG. **28**A) receives the AuthGrant from the mobile device **150** via the short-range communication capability (e.g., BLE) indicating that the user of the mobile device **150** wishes to perform the operation of the offline-payment operated machine **1500** (FIG. **28**A). For example with reference to operation **1012** in FIG. **23**, the payment module **1520** (FIG. **28**A) receives an authorization grant token from the mobile device **150** via the short-range communication capability (e.g., BLE) indicating that the user of the mobile device **150** wishes to perform the operation of the offline-payment operated machine **1500** (FIG. **28**A).

The payment module validates (**1610**) the request. Validation of the request indicates (**1612**) that the respective mobile device is authorized to initiate payment for the operation by a remote server via the long-range communication capability. In some implementations, the payment module **1520** validates the request from the mobile device **150** by determining whether the AuthGrant or the authorization grant token includes a valid authorization code.

In accordance with a determination that the request is valid, the payment module causes (**1614**) the payment operated machine to perform the operation by issuing a predefined signal sequence to the control unit, where the predefined signal sequence emulates a signal sequence that would be issued by the coin receiving switch in response to receiving a preset number of coins. For example, with reference to FIG. **28**B, the payment module **1520** issues a predefined signal sequence with first interface module **1522** to the control unit **1506** that emulates sample **1550** in FIG. **28**B. Continuing with this example, in response to receiving the predefined signal sequence from the payment module **1520** control unit **1506** causes initiation of the operation of the offline-payment operated machine **1500** by applying current to the gate of the transistor **1510** which allows current to flow from the power supply **1508** to operation unit **1512**. In some implementations, the control unit **1506** causes initiation of the operation by setting a timer to an amount of time corresponding to the preset number of coins whereby current flows to the gate of the transistor **1510** for the set amount of time. For example, the preset number of coins is a number of a coins required to run the offline-payment operated machine **1500** by for a default amount of time and subsequent coins may be added to extend the amount of time that the offline-payment operated machine **1500** by will run. In some implementations, the preset number of coins is a number of a coins required to cause the offline-payment operated machine **1500** to dispense a purchased item, such as laundry detergent.

Alternatively, in some implementations, in accordance with a determination that the request is valid, the offline-payment operated machine **1500** displays credit to the user (e.g., via one of the displays **122** or **124** shown in FIG. **19**) and the user interacts with the input mechanisms of the offline-payment operated machine **1500** **120** (e.g., via the buttons **126** or a touch screen display **124** shown in FIG. **19**) to perform the operation of the machine. For example, if the offline-payment operated machine **1500** is a dryer, the user of the mobile device **150** selects the appropriate spin cycle via input mechanisms of the dryer, and when the user of the mobile device **150** selects a start/run input mechanism of the dryer, control unit **1506** of the dryer causes initiation of the operation of the dryer (e.g., starting a motor that corresponds to operation unit **1512** in FIG. **28**A).

In some implementations, prior to sending the operation information and after causing the offline-payment operated machine to perform the operation by issuing the predefined signal sequence to the control unit, the payment module obtains (**1616**) a notification from the offline-payment operated machine indicating initiation of the operation of the offline-payment operated machine and the preset number of coins. For example, after issuing the preset signal sequence to control unit **1506**, the payment module **1520** (FIG. **28**A) obtains a notification indicating that the control unit **1506** sent control signals to initiate operation of the offline-payment operated machine **1500** in response to receiving the predefined signal sequence. For example, the notification is obtained by the second interface module **1524** (e.g., the sample **1570**, FIG. **28**B) sampling controls signals sent by control unit **1506** (e.g., application of current to the gate of the transistor **1510** which allows current to flow from the power supply **1508** to operation unit **1512**).

In response to receiving the notification, the payment module (**1618**): generates the operation information based at least in part on the notification; and stores the generated operation information in the memory. For example, after obtaining the notification, the payment module **1520** (FIG. **28**A) generates operation information corresponding to performance of the operation and the preset number of coins associated with the predefined signal sequence (e.g., the amount required to initiate operation of the offline-payment operated machine **1500**) and stores the operation information in memory local to the payment module **1520** (e.g., the memory **760**, FIG. **20**).

In some implementations, the payment module sends (**1620**) operation information corresponding to the operation to the respective mobile device via the short-range communication capability. For example, after operation **1618**, the payment module **1520** (FIG. **28**A) sends the operation information to the mobile device **150** via the first communication capability of the mobile device **150** such as a radio/transceiver means for communicating via one or more short-range communication protocols such as BLE, NFC, and/or the like (i.e., a non-persistent communication channel)

It should be understood that the particular order in which the operations in FIGS. **29**A-**29**B have been described is merely for example purposes and is not intended to indicate that the described order is the only order in which the operations could be performed. One of ordinary skill in the art would recognize various ways to reorder the operations described herein. Additionally, it should be noted that details of other processes described herein with respect to other methods described herein (e.g., the method **1700** in FIG. **30**) are also applicable in an analogous manner to the method **1600** described above with respect to FIGS. **29**A-**29**B.

FIG. **30** illustrates a flowchart diagram of a method **1700** of enabling a payment operated machine to accept electronic payments in accordance with some implementations. In some implementations, the method **1700** is performed by an offline-payment operated machine (e.g., the payment accepting unit **120**, FIGS. **5** and **19** (sometimes also herein called "machine **120**"), or the offline-payment operated machine **1500**, FIG. **28**A) such as dryer or washer in a laundromat, a parking meter, a car wash payment kiosk, or the like.

In some implementations, the offline-payment operated machine includes a control unit (e.g., the control unit **1506**, FIG. **28**A), memory, and a coin receiving switch (e.g., the microswitch **1502**, FIG. **28**A). In some implementations, the offline-payment operated machine also includes a short-range communication capability corresponding to a short-

range communication protocol (e.g., a non-persistent communication channel such as BLE, NFC, and/or the like), where the short-range communication capability is configured to communicate with one or more mobile devices, where each of the one or more mobile devices is configured with a complimentary short-range communication capability and a long-range communication capability corresponding to a long-range communication protocol (e.g., Wi-Fi, CDMA, GSM, and/or the like). For example, in some implementations, the method **1700** is performed by the machine **120**, (FIGS. **5** and **19**). In some implementations, the method **1700** is governed by instructions that are stored in a non-transitory computer readable storage medium and the instructions are executed by the control unit of the offline-payment operated machine.

The offline-payment operated machine receives (**1702**) a request via a short-range communication capability from a respective mobile device to perform an operation of the offline-payment operated machine. For example, with reference to FIG. **8**C, the payment module **1520** (FIG. **28**A) receives the AuthGrant from the mobile device **150** via the short-range communication capability (e.g., BLE) indicating that the user of the mobile device **150** wishes to perform the operation of the offline-payment operated machine **1500** (FIG. **28**A). For example with reference to operation **1012** in FIG. **23**, the payment module **1520** (FIG. **28**A) receives an authorization grant token from the mobile device **150** via the short-range communication capability (e.g., BLE) indicating that the user of the mobile device **150** wishes to perform the operation of the offline-payment operated machine **1500** (FIG. **28**A).

The offline-payment operated machine validates (**1704**) the request. Validation of the request indicates (**1706**) that the respective mobile device is authorized to initiate payment for the operation by a remote server via the long-range communication capability. In some implementations, the payment module **1520** validates the request from the mobile device **150** by determining whether the AuthGrant or the authorization grant token includes a valid authorization code.

In accordance with a determination that the request is valid, the offline-payment operated machine performs (**1708**) the operation by issuing a predefined signal sequence to the control unit, where the predefined signal sequence emulates a preset number of coins received by the coin receiving switch. For example, in accordance with a determination that the request is valid, the offline-payment operated machine or a component thereof issues a predefined signal sequence to the control unit **1506** that emulates sample **1550** in FIG. **28**B. Continuing with this example, in response to receiving the predefined signal sequence from the payment module **1520**, control unit **1506** causes initiation of the operation of the offline-payment operated machine **1500** by applying current to the gate of the transistor **1510** which allows current to flow from the power supply **1508** to operation unit **1512**. In another example, in accordance with a determination that the request is valid, the control unit **1506** causes initiation of the operation of the offline-payment operated machine **1500** by applying current to the gate of the transistor **1510** which allows current to flow from the power supply **1508** to operation unit **1512**.

It should be understood that the particular order in which the operations in FIG. **30** have been described is merely for example purposes and is not intended to indicate that the described order is the only order in which the operations could be performed. One of ordinary skill in the art would recognize various ways to reorder the operations described herein. Additionally, it should be noted that details of other processes described herein with respect to other methods described herein (e.g., the method **1600** in FIGS. **29**A-**29**B) are also applicable in an analogous manner to the method **1700** described above with respect to FIG. **30**.

MISCELLANEOUS

It should be noted that relative terms are meant to help in the understanding of the technology and are not meant to limit the scope of the invention. Similarly, unless specifically stated otherwise, the terms used for labels (e.g., "first," "second," and "third") are meant solely for purposes of designation and not for order or limitation. The term "short" in the phrase "short-range" (in addition to having technology specific meanings) is relative to the term "long" in the phrase "long-range."

The terms "may," "might," "can," and "could" are used to indicate alternatives and optional features and only should be construed as a limitation if specifically included in the claims.

It should be noted that, unless otherwise specified, the term "or" is used in its nonexclusive form (e.g., "A or B" includes A, B, A and B, or any combination thereof, but it would not have to include all of these possibilities). It should be noted that, unless otherwise specified, "and/or" is used similarly (e.g., "A and/or B" includes A, B, A and B, or any combination thereof, but it would not have to include all of these possibilities). It should be noted that, unless otherwise specified, the terms "includes" and "has" mean "comprises" (e.g., a device that includes, has, or comprises A and B contains A and B, but optionally may contain C or additional components other than A and B). It should be noted that, unless otherwise specified, the singular forms "a," "an," and "the" refer to one or more than one, unless the context clearly dictates otherwise.

It is to be understood that the inventions, examples, and implementations described herein are not limited to particularly exemplified materials, methods, and/or structures. It is to be understood that the inventions, examples, and implementations described herein are to be considered preferred inventions, examples, and implementations whether specifically identified as such or not.

The terms and expressions that have been employed in the foregoing specification are used as terms of description and not of limitation, and are not intended to exclude equivalents of the features shown and described. While the above is a complete description of selected implementations of the present invention, it is possible to practice the invention using various alternatives, modifications, adaptations, variations, and/or combinations and their equivalents. It will be appreciated by those of ordinary skill in the art that any arrangement that is calculated to achieve the same purpose may be substituted for the specific embodiment shown. It is also to be understood that the following claims are intended to cover all of the generic and specific features of the invention herein described and all statements of the scope of the invention that, as a matter of language, might be said to fall therebetween.

What is claimed is:

1. A method of executing payment accepting unit events, comprising:

at a mobile device with one or more processors, memory, one or more output devices including a display, and one or more radio transceivers:

detecting one or more payment accepting units in proximity to the mobile device, including detecting

predefined radio transmissions broadcast by the one or more payment accepting units, wherein the one or more payment accepting units are payment operated machines that accept payment for dispensing of products and/or services;

displaying a user interface of a mobile payment application on the display of the mobile device, the user interface being configured to display a visual indication of the one or more payment accepting units and accept user input to (i) receive selection by a user of the mobile device of an available payment accepting unit of the one or more payment accepting units and (ii) trigger payment by the mobile payment application for a transaction initiated by the user of the mobile device with the available payment accepting unit of the one or more payment accepting units;

establishing via the one or more radio transceivers a wireless connection between the mobile device and the available payment accepting unit of the one or more payment accepting units;

after establishing the wireless connection, enabling user interaction with the user interface of the mobile payment application to complete the transaction;

exchanging information with the available payment accepting unit via the one or more radio transceivers, in conjunction with the transaction; and

in response to receiving the information, displaying, on the display, an updated user interface of the mobile payment application to the user of the mobile device.

2. The method of claim **1**, wherein the updated user interface of the mobile payment application includes at least one of:

a message displayed on the display of the mobile device;

a banner notification displayed on a display of the mobile device; and/or

a visual alert from one or more LEDs of the mobile device.

3. The method of claim **1**, wherein the information indicates completion of the transaction between the user of the mobile device and the available payment accepting unit.

4. The method of claim **2**, wherein the mobile device includes a long-range transceiver and the information at least includes an amount of the completed transaction, and the method further comprises:

sending at least the amount of the completed transaction to a server via the long-range transceiver.

5. The method of claim **1**, wherein the information indicates abortion of the transaction initiated by the user of the mobile device.

6. The method of claim **1**, wherein the information indicates failure of the transaction initiated by the user of the mobile device or a malfunction associated with the available payment accepting unit.

7. The method of claim **1**, wherein the mobile device includes an accelerometer and the method further comprises:

based on data from the accelerometer, determining whether the user is walking away from the available payment accepting unit; and

in accordance with a determination that the user is walking away from the available payment accepting unit, canceling the wireless connection.

8. The method of claim **1**, wherein the information reflects a status of the transaction for a product stocked by the available payment accepting unit.

9. The method of claim **1**, further comprising:

in addition to exchanging the information, receiving, via the one or more radio transceivers, a coupon that is targeted to the user of the mobile device based on the transaction.

10. The method of claim **1**, wherein the user interface of the mobile payment application presented after establishing via the wireless connection indicates that the wireless connection has been established with the available payment accepting unit.

11. The method of claim **1**, wherein the user interface of the mobile payment application presented after establishing via the wireless connection includes:

a visual representation of available payment accepting unit;

an indication of a prepared balance; and

an affordance that when slid, indicates the initiation of the transaction.

12. The method of claim **11**, wherein the affordance is slid in response to receiving a user input of swipe on the affordance displayed on the display of the mobile device.

13. The method of claim **1**, wherein the predefined radio transmissions are broadcasted by the one or more payment accepting units indicating status of the one or more payment accepting units.

14. The method of claim **1**, wherein the one or more payment operated machines include a laundromat washer or dryer, a vending machine, a parking meter, a toll booth, an arcade game, a kiosk, a photo booth, a toll booth, or a ticket dispensing machine.

15. A mobile device, comprising:

one or more radio transceivers;

one or more output devices including a display;

one or more processors; and

memory storing one or more programs to be executed by the one or more processors, the one or more programs comprising instructions for:

detecting one or more payment accepting units in proximity to the mobile device, including detecting predefined radio transmissions broadcast by the one or more payment accepting units, wherein the one or more payment accepting units are payment operated machines that accept payment for dispensing of products and/or services;

displaying a user interface of a mobile payment application on the display of the mobile device, the user interface being configured to display a visual indication of the one or more payment accepting units and accept user input to (i) receive selection by a user of the mobile device of an available payment accepting unit of the one or more payment accepting units and (ii) trigger payment by the mobile payment application for a transaction initiated by the user of the mobile device with the available payment accepting unit of the one or more payment accepting units;

establishing via the one or more radio transceivers a wireless connection between the mobile device and the available payment accepting unit of the one or more payment accepting units;

after establishing the wireless connection, enabling user interaction with the user interface of the mobile payment application to complete the transaction;

exchanging information with the available payment accepting unit via the one or more radio transceivers, in conjunction with the transaction; and

in response to receiving the information, displaying, on the display, an updated user interface of the mobile payment application to the user of the mobile device.

16. The mobile device of claim 15, wherein the one or more output devices of the mobile device include at least one of: one or more speakers, one or more light emitting diodes (LEDs), and a vibration mechanism.

17. The mobile device of claim 15, wherein:

the mobile payment application on the mobile device is configured to communicate with a payment module coupled with an internal interface of the available payment accepting unit;

the mobile device sends a transmission to the payment module via the one or more radio transceivers of the mobile device in conjunction with the transaction;

the available payment accepting unit sends the transmission to the payment module in conjunction with the transaction; and

the mobile device obtains, via the one or more radio transceivers, the information from the payment module based on the transmission.

18. The mobile device of claim 15, wherein:

the wireless connection is established via a first transceiver of the one or more transceivers;

the information is exchanged via a second transceiver of the one or more transceivers; and

the first transceiver is different from the second transceiver.

19. The mobile device of claim 15, wherein the one or more payment accepting units further comprise one or more of: parking meters, toll booths, laundromat washers, laundromat dryers, arcade games, kiosks, photo booths, toll booths, and/or transit ticket dispensing machines.

20. The mobile device of claim 15, wherein the wireless connection between the mobile device and the available payment accepting unit is a Bluetooth connection, a Bluetooth Smart connection, a Bluetooth Low Energy connection, a near-field communication connection, an Ultra Wideband connection, a radio frequency identification connection, an infrared wireless connection, and/or an induction wireless connection.

21. The mobile device of claim 15, wherein the one or more payment operated machines include a laundromat washer or dryer, a vending machine, a parking meter, a toll booth, an arcade game, a kiosk, a photo booth, a toll booth, or a ticket dispensing machine.

22. A non-transitory computer readable storage medium storing one or more programs, the one or more programs comprising instructions, which, when executed by a mobile device with one or more processors, one or more output devices including a display, and one or more radio transceivers, cause the mobile device to perform operations comprising:

detecting one or more payment accepting units in proximity to the mobile device, including detecting predefined radio transmissions broadcast by the one or more payment accepting units, wherein the one or more payment accepting units are payment operated machines that accept payment for dispensing of products and/or services;

displaying a user interface of a mobile payment application on the display of the mobile device, the user interface being configured to display a visual indication of the one or more payment accepting units and accept user input to (i) receive selection by a user of the mobile device of an available payment accepting unit of the one or more payment accepting units and (ii) trigger payment by the mobile payment application for a transaction initiated by the user of the mobile device with the available payment accepting unit of the one or more payment accepting units;

establishing via the one or more radio transceivers a wireless connection between the mobile device and the available payment accepting unit of the one or more payment accepting units;

after establishing the wireless connection, enabling user interaction with the user interface of the mobile payment application to complete the transaction;

exchanging information with the available payment accepting unit via the one or more radio transceivers, in conjunction with the transaction; and

in response to receiving the information, displaying, on the display, an updated user interface of the mobile payment application to the user of the mobile device.

23. The non-transitory computer readable storage medium of claim 22, wherein the updated user interface of the mobile payment application includes at least one of:

a message displayed on the display of the mobile device;

a banner notification displayed on a display of the mobile device; and/or

a visual alert from one or more LEDs of the mobile device.

24. The non-transitory computer readable storage medium of claim 22, wherein the information indicates completion of the transaction between the user of the mobile device and the available payment accepting unit.

25. The non-transitory computer readable storage medium of claim 24, wherein the information at least includes an amount of the completed transaction, and the instructions further cause the mobile device to send at least the amount of the completed transaction to a server.

26. The non-transitory computer readable storage medium of claim 22, wherein the information indicates abortion of the transaction initiated by the user of the mobile device.

27. The non-transitory computer readable storage medium of claim 22, wherein the information indicates failure of the transaction initiated by the user of the mobile device or a malfunction associated with the available payment accepting unit.

28. The non-transitory computer readable storage medium of claim 22, wherein the one or more payment operated machines include a laundromat washer or dryer, a vending machine, a parking meter, a toll booth, an arcade game, a kiosk, a photo booth, a toll booth, or a ticket dispensing machine.

* * * * *