**IN THE UNITED STATES DISTRICT COURT**
**FOR THE WESTERN DISTRICT OF TEXAS**
**WACO DIVISION**

| | |
|---|---|
| **Intirion Corporation,**<br>Plaintiff,<br>v.<br>**College Products, Inc.,**<br>Defendant. | Civil Action No. 6:22-cv-00459<br><br>Jury Trial Demanded |

## COMPLAINT FOR PATENT INFRINGEMENT

Plaintiff Intirion Corporation ("Plaintiff"), through its attorneys, for its Complaint for Patent Infringement against College Products, Inc. ("Defendant") alleges the following:

## I. NATURE OF THE ACTION

1. This is a civil action for patent infringement arising under the Patent Laws of the United States, 35 U.S.C. §§ 1, et seq., including §§ 271, 281, 284, and 285.

## II. PARTIES

2. Plaintiff Intirion Corporation is a corporation organized and existing under the laws of Delaware and maintains its principal place of business at 2 Annette Road, Suite 3, Foxboro, MA 02035.

3. Defendant College Products is a corporation organized and existing under the laws of Iowa and on information and belief maintains its principal place of business at 1400 W. 1st Street, Sioux City, IA 51103. Defendant's registered agent is located at 815 Brazos Street, Suite 500, Austin, TX 78701.

## III. JURISDICTION AND VENUE

4. This is an action for patent infringement arising under the patent laws of the United States, in particular, 35 U.S.C. §§ 271, 281, 284, and 285.

5. This Court has exclusive subject matter jurisdiction over this action for patent infringement pursuant to 28 USC § 1331 and § 1338(a).

6. This Court has specific and general personal jurisdiction over Defendant pursuant to due process and/or the Texas Long Arm Statute, because Defendant has committed acts giving rise to this action within Texas and within this judicial district. The Court's exercise of jurisdiction over Defendant would not offend traditional notions of fair play and substantial justice because Defendant has established minimum contacts with the forum. For example, on information and belief, Defendant has committed acts of infringement throughout Texas and in this judicial district, by among other things, selling and leasing - and offering for sale and lease -products that infringe the asserted patents, directly or through intermediaries, as alleged herein.

7. Venue in the Western District of Texas is proper pursuant to 28 U.S.C. §§1391 and/or 1400(b). Venue is proper in this District under 28 USC § 1400(b) because Defendant is registered to do business in Texas, Defendant's registered agent is located in the Western District of Texas, Defendant has a regular and established place of business in this District, and Defendant has committed acts of patent infringement in this District. Moreover, Defendant has employees and/or agents physically present in this judicial district who perform acts for, on behalf of, with the consent of, and/or under the direction of Defendant.

## IV. PATENTS IN SUIT

8. Plaintiff is the owner by assignment of all right, title and interest in United States Patent Nos. 11,274,876; 10,495,374; 9,791,206; and 9,657,974 (the "Patents in Suit"), including

all rights to enforce and prosecute all causes for actions rising under the Patents in Suit, the right to any remedies for infringement on the Patents in Suit, and the right to collect damages for all relevant times against infringers of the Patents in Suit. Accordingly, Plaintiff possesses the exclusive right and standing to prosecute the present action for infringement by Defendant of the Patents in Suit.

9. Each of the Patents in Suit relates to the construction and operation of a microwave/mini-refrigerator combination appliance. The patented appliance automatically coordinates the operation of the microwave and the refrigerator so that both cannot be operated at the same time, which would cause excessive power draw. The patented appliance includes a smoke sensor that shuts off the microwave cooking element when smoke is sensed inside the microwave. This avoids setting off smoke alarms. The patented appliance also includes USB ports that can be used to charge electronic devices.

10. Plaintiff designs, manufactures, distributes, maintains, and services products incorporating the Patents in Suit throughout the United States, including within this judicial district.

11. The features of Plaintiff's patented combination appliance products are particularly useful in college dorms and in similar settings. This is because the patented features prevent excessive power draw that would otherwise trip electrical breakers and cause loss of power to the dorm rooms.

12. The features of Plaintiffs's patented combination appliance also prevent unnecessary dormitory evacuations that would otherwise result from smoke detectors sensing smoke from burning food items in the microwave ovens. The USB charging ports on Plaintiff's

patented combination appliance also avoids the need for students to use the limited number of electrical outlets in their dorm rooms for phone and laptop chargers.

13. Because of the benefits of the Patents in Suit, Plaintiff has agreements with colleges and universities throughout the United States, including with colleges and universities in this judicial district, to offer units incorporating the inventions of the Patents in Suit for sale or lease to students for use in their dorm rooms.

***A. US Patent No. 11,274,876***

14. US Patent No. 11,274,876 (the "876 Patent") is entitled "Multiple Linked Appliance With Auxiliary Outlet" and was duly issued to Plaintiff by the United States Patent and Trademark Office on March 15, 2022. A true and correct copy of the 876 Patent is attached hereto as Exhibit 1 and incorporated herein by reference.

***B. US Patent No. 10,495,374***

15. US Patent No. 10,495,374 (the "374 Patent") is entitled "Multiple Linked Appliance With Auxiliary Outlet" and was duly issued by the United States Patent and Trademark Office to Plaintiff on December 3, 2019. A true and correct copy of the 374 Patent is attached hereto as Exhibit 2 and incorporated herein by reference.

***C. US Patent No. 9,791,206***

16. US Patent No. 9,791,206 (the "206 Patent") is entitled "Multiple Linked Appliance With Auxiliary Outlet" and was duly issued by the United States Patent and Trademark Office to Plaintiff on October 17, 2017. A true and correct copy of the 206 Patent is attached hereto as Exhibit 3 and incorporated herein by reference.

***D. US Patent No. 9,657,974***

17. US Patent No. 9,657,974 (the "974 Patent") is entitled "Multiple Linked Appliance With Auxiliary Outlet" and was duly issued by the United States Patent and Trademark Office to Plaintiff on May 23, 2017. A true and correct copy of the 974 Patent is attached hereto as Exhibit 4 and incorporated herein by reference.

## V. THE ACCUSED PRODUCTS

18. Defendant makes, sells, offers for sale, leases, offers for lease, and/or distributes within the United States, including within this judicial district, products such as, but not limited to, microwave, mini refrigerators, and/or microwave and refrigerator combinations that are sold under the trademarks MicroChill and/or MicroChill 3.2 (the "Accused Products").

19. The Accused Products infringe the Patents in Suit. The Defendant has copied Plaintiff's patented features. Like the Plaintiff's patented combination appliance, the Accused Products are a combination microwave and mini-refrigerator appliance that includes power control circuitry that avoids excessive power draw by automatically preventing both the microwave and refrigerator from operating at the same time. Defendant also copied Plaintiff's patented smoke sensor technology that stops operation of the microwave cooking element whenever smoke is sensed, to avoid tripping smoke detectors and unnecessary dormitory evacuations. Defendant also copied Plaintiff's patented USB charging port feature on the front of the microwave oven.

20. The Accused Products are explicitly marketed to the public, including Plaintiff's customers, as providing the very features that are protected by the Patents in Suit and for the very same purpose – to provide a safe and reliable microwave and mini-refringerator combination appliance. *See Exhibit 5.* Consequently, Defendant's sales and leases of the Accused Products directly competes with and takes business from Plaintiff.

21. Defendant solicits and enters into agreements to provide the Accused Products to colleges and universities throughout the United States, including within this judicial district. Under the agreements and hoped for agreements with these colleges and universities, the Accused Products are approved for use in dorm rooms, and students buy or lease the Accused Products. Defendant directly installs the Accused Products in the dorm rooms. Defendant also directly provides any necessary maintenance or warranty services for the Accused Products in such dorm rooms. In exchange, Defendant receives all or a portion of the proceeds generated by selling or leasing the Accused Products to the students.

## VI. COUNT 1: INFRINGEMENT OF THE 876 PATENT

22. Plaintiff restates Paragraphs 1 through 21 as if fully rewritten herein.

23. Defendant has, under 35 USC § 271(a) directly infringed, and continues to directly infringe, literally and/or under the doctrine of equivalents, one or more claims, including without limitation at least claims 1, 21, 25 and 26 of the 876 Patent, by making, using, offering to sell, selling, leasing, offering to lease, and/or importing the Accused Products into the United States, including within this judicial district.

24. Defendant continues to directly infringe at least one claim of the 876 Patent, literally or under the doctrine of equivalents, by making, using, selling, offering for sale, leasing, offering for lease, importing, and/or distributing the Accused Products in the United States, including within this judicial district, without Plaintiff's authority.

25. Defendant has sold and/or leased the Accused Products to educational institutions and individuals throughout the United States and in the State of Texas, including in this judicial district, and has induced others to infringe the 876 Patent by using the Accused Products.

26. Defendant has received notice and had actual or constructive knowledge of the 876 Patent since at least the date of service of this Complaint.

27. Defendant has engaged in infringement by making, using, offering to sell, selling, offering to lease, leasing, and importing into the United States, including in this judicial district, the Accused Products despite having knowledge that the Accused Products infringe the 876 Patent.

28. Since at least the date of service of this Complaint, through its actions, Defendants have contributed to the infringement of the 876 Patent by having others sell, offer for sale, leasing, offering to lease, or use the Accused Products throughout the United States, including within this judicial district, with knowledge that the Accused Products infringe the 876 Patent.

29. The Accused Products are especially made or adapted for infringing the 876 Patent and have no substantial non-infringing use. For example, in view of the preceding Paragraphs, the Accused Products contain functionality which is material to at least one claim of the 876 Patent.

30. Plaintiff has been damaged as a result of Defendant's infringement. Upon information and belief, Defendant will continue to infringe one or more claims of the 876 Patent unless and until it is enjoined by this Court.

## VII. COUNT 2: INFRINGEMENT OF 374 PATENT

31. Plaintiff restates Paragraphs 1 through 30 as if fully rewritten herein.

32. Defendant has, under 35 USC § 271(a) directly infringed, and continues to directly infringe, literally and/or under the doctrine of equivalents, one or more claims, including without limitation at least claims 9, 10, 12, 17, 18, and 20 of the 374 Patent, by making, using, offering to sell, selling, leasing, offering to lease, and/or importing into the United States, including within this judicial district, the Accused Products.

33. Defendant continues to directly infringe at least one claim of the 374 Patent, literally or under the doctrine of equivalents, by making, using, selling, offering for sale, leasing, offering for lease, importing, and/or distributing the Accused Products in the United States, including within this judicial district, without Plaintiff's authority.

34. Defendant has sold and/or leased the Accused Products to educational institutions and individuals throughout the United States and in the State of Texas, including in this judicial district, and has induced others to infringe the 374 Patent by using the Accused Products.

35. Defendant has received notice and actual or constructive knowledge of the 374 Patent since at least the date of service of this Complaint.

36. Defendant has engaged in infringement by making, using, offering to sell, selling, leasing, offering to lease, and importing the Accused Products into the United States, including in this judicial district, despite having knowledge that the Accused Products infringe the 374 Patent.

37. Since at least the date of service of this Complaint, through its actions, Defendant has contributed to the infringement of the 374 Patent by having others sell, offer for sale, selling, leasing, offering to lease, or use the Accused Products throughout the United States, including within this judicial district, with knowledge that the Accused Products infringe the 374 Patent.

38. The Accused Products are especially made or adapted for infringing the 374 Patent and have no substantial non-infringing use. For example, in view of the preceding Paragraphs, the Accused Products contain functionality which is material to at least one claim of the 374 Patent.

39. Plaintiff has been damaged as a result of Defendant's infringement. Upon information and belief, Defendant will continue to infringe one or more claims of the 374 Patent unless and until they are enjoined by this Court.

## VIII. COUNT 3: INFRINGEMENT OF 206 PATENT

40. Plaintiff restates Paragraphs 1 through 39 as if fully rewritten herein.

41. Defendant has, under 35 USC § 271(a) directly infringed, and continues to directly infringe, literally and/or under the doctrine of equivalents, one or more claims, including without limitation at least claims 9, 10, 11 and 12 of the 206 Patent, by making, using, offering to sell, selling, leasing, offering to lease, and/or importing into the United States, including within this judicial district, the Accused Products.

42. Defendant continues to directly infringe at least one claim of the 206 Patent, literally or under the doctrine of equivalents, by making, using, selling, offering for sale, leasing, offering for lease, importing, and/or distributing the Accused Products in the United States, including within this judicial district, without Plaintiff's authority.

43. Defendant has sold and/or leased the Accused Products to educational institutions and individuals throughout the United States and in the State of Texas, including in this judicial district, and has induced others to infringe the 206 Patent by using the Accused Products.

44. Defendant has received notice and actual or constructive knowledge of the 206 Patent since at least the date of service of this Complaint.

45. Defendant has engaged in infringement by making, using, offering to sell, selling, leasing, offering to lease, and importing the Accused Products into the United States, including in this judicial district, despite having knowledge that the Accused Products infringe the 206 Patent.

46. Since at least the date of service of this Complaint, through its actions, Defendant has contributed to the infringement of the 206 Patent by having others sell, selling, offer for sale, lease, offering to lease, or use the Accused Products throughout the United States, including within this judicial district, with knowledge that the Accused Products infringe the 206 Patent.

47. The Accused Products are especially made or adapted for infringing the 206 Patent and have no substantial non-infringing use. For example, in view of the preceding Paragraphs, the Accused Products contain functionality which is material to at least one claim of the 206 Patent.

48. Plaintiff has been damaged as a result of Defendant's infringement. Upon information and belief, Defendant will continue to infringe one or more claims of the 206 Patent unless and until they are enjoined by this Court.

## IX. COUNT 4: INFRINGEMENT OF 974 PATENT

49. Plaintiff restates Paragraphs 1 through 48 as if fully rewritten herein.

50. Defendant has, under 35 USC § 271(a) directly infringed, and continues to directly infringe, literally and/or under the doctrine of equivalents, one or more claims, including without limitation at least claims 1, 7 and 12 of the 974 Patent, by making, using, offering to sell, selling, leasing, offering to lease, and/or importing into the United States, including within this judicial district, the Accused Products.

51. Defendant continues to directly infringe at least one claim of the 974 Patent, literally or under the doctrine of equivalents, by making, using, selling, offering for sale, selling, leasing, offering for lease, importing, and/or distributing the Accused Products in the United States, including within this judicial district, without Plaintiff's authority.

52. Defendant has sold and/or leased the Accused Products to educational institutions and individuals throughout the United States and in the State of Texas, including in this judicial district, and has induced others to infringe the 974 Patent by using the Accused Products.

53. Defendant has received notice and actual or constructive knowledge of the 974 Patent since at least the date of service of this Complaint.

54. Defendant has engaged in infringement by making, using, offering to sell, selling, leasing, offering to lease, and importing the Accused Products into the United States, including in this judicial district, despite having knowledge that the Accused Products infringe the 974 Patent.

55. Since at least the date of service of this Complaint, through its actions, Defendant has contributed to the infringement of the 974 Patent by having others sell, offer for sale, selling, leasing, offering for lease, or use the Accused Products throughout the United States, including within this judicial district, with knowledge that the Accused Products infringe the 974 Patent.

56. The Accused Products are especially made or adapted for infringing the 974 Patent and have no substantial non-infringing use. For example, in view of the preceding Paragraphs, the Accused Products contain functionality which is material to at least one claim of the 974 Patent.

57. Plaintiff has been damaged as a result of Defendant's infringement. Upon information and belief, Defendant will continue to infringe one or more claims of the 974 Patent unless and until they are enjoined by this Court.

## X. PRAYER FOR RELIEF

WHEREFORE, Plaintiff respectfully requests the following relief:

A. A judgment that Defendant has directly infringed the Patents in Suit, either literally and/or under the doctrine of equivalents, and continues to directly infringe such Patents in Suit;

B. A judgment and order requiring Defendant to pay Plaintiff damages for infringement of the Patents in Suit under 35 USC § 284;

C. A judgment that this is an exceptional case within the meaning of 35 USC § 285 and Plaintiff is therefore entitled to its reasonable attorneys fees incurred in prosecuting this action;

D. A judgment and order requiring Defendant to pay Plaintiff prejudgment and postjudgment interest on the damages awarded;

E. A judgment and order awarding a compulsory ongoing royalty be paid by Defendant to Plaintiff;

F. A judgment and order awarding Plaintiff costs and any disbursements associated with bringing this action;

G. A judgment granting a preliminary and permanent injunction that restrains and enjoins Defendant, its officers, directors, employees, agents, subsidiaries, successors, assigns and all those in privity with them, or acting in concert with them, from directly or indirectly infringing the Patents in Suit; and

H. Such other and further relief as the Court deems just and equitable under law or in equity.

**JURY TRIAL DEMANDED**

Plaintiff respectfully requests a trial by jury on all issues so triable.

Respectfully submitted,

**BEARD KULTGEN BROPHY BOSTWICK & DICKSON, PLLC**

Dan N. MacLemore
State Bar No. 24037013
Andy McSwain
State Bar No. 13861100
Andrew Schrader
State Bar No. 24062988
Mark E. Firmin
State Bar No. 24099614
Lauren Jaynes Olivarez
State Bar No. 24084275

220 South Fourth Street
Waco, Texas 76701
(254) 776-5500 – Telephone
(254) 776-3591 – Fax
maclemore@thetexasfirm.com
mcswain@thetexasfirm.com
schrader@thetexasfirm.com
firmin@thetexasfirm.com
olivarez@thetexasfirm.com
**ATTORNEYS FOR PLAINTIFF**
**INTIRION CORPORATION**

# EXHIBIT 1

US011274876B2

(12) **United States Patent**
**Hall et al.**

(10) **Patent No.: US 11,274,876 B2**
(45) **Date of Patent: Mar. 15, 2022**

(54) **MULTIPLE LINKED APPLIANCE WITH AUXILIARY OUTLET**

(71) Applicant: **Intirion Corporation**, Walpole, MA (US)

(72) Inventors: **Gregory Allan Thomas Hall**, Guelph (CA); **Philip Emma**, Topsfield, MA (US); **Jim Estill**, Guelph (CA); **Bryan Stuart Cunningham**, Kitchener (CA); **Dennis O'Brien**, Guelph (CA)

(73) Assignee: **Intirion Corporation**, Walpole, MA (US)

( * ) Notice: Subject to any disclaimer, the term of this patent is extended or adjusted under 35 U.S.C. 154(b) by 178 days.

(21) Appl. No.: **16/671,383**

(22) Filed: **Nov. 1, 2019**

(65) **Prior Publication Data**

US 2020/0064056 A1 Feb. 27, 2020

**Related U.S. Application Data**

(63) Continuation-in-part of application No. 15/600,118, filed on May 19, 2017, now Pat. No. 10,495,374, (Continued)

(51) **Int. Cl.**
***H05B 6/64*** (2006.01)
***H05B 6/66*** (2006.01)
(Continued)

(52) **U.S. Cl.**
CPC ..... ***F25D 23/12*** (2013.01); ***F25D 29/005*** (2013.01); ***H05B 6/666*** (2013.01); ***H05B 6/68*** (2013.01)

(58) **Field of Classification Search**
CPC . H05B 6/68; H05B 6/808; H05B 6/66; H05B 6/645; H05B 6/666; F25D 23/12; F25B 29/00
(Continued)

(56) **References Cited**

U.S. PATENT DOCUMENTS

5,521,359 A * 5/1996 Bone ..... H05B 6/68 219/679
2003/0011466 A1* 1/2003 Samuel ..... G07F 9/06 340/5.73
(Continued)

FOREIGN PATENT DOCUMENTS

JP 5240447 A * 9/1993

*Primary Examiner* — Hung D Nguyen
(74) *Attorney, Agent, or Firm* — Ralph E. Jocke; Walker & Jocke

(57) **ABSTRACT**

A combination microwave and refrigerator system is provided. The microwave oven is connected to a source of power and has a control circuit for controlling the operation of the microwave oven. A first power supply outlet is provided on the microwave oven. A refrigerator is connected to the source of power by connection to the first power supply outlet. The control circuit is configured to disable the cooling operation of the refrigerator, when the microwave oven demands cooking power, and enable the cooling operation of the refrigerator when the microwave oven is not drawing cooking power. A safety sensor is provided in the microwave oven, and is configured to cause cooking power to the microwave oven to be turned off upon the safety sensor sensing a dangerous condition.

**28 Claims, 25 Drawing Sheets**

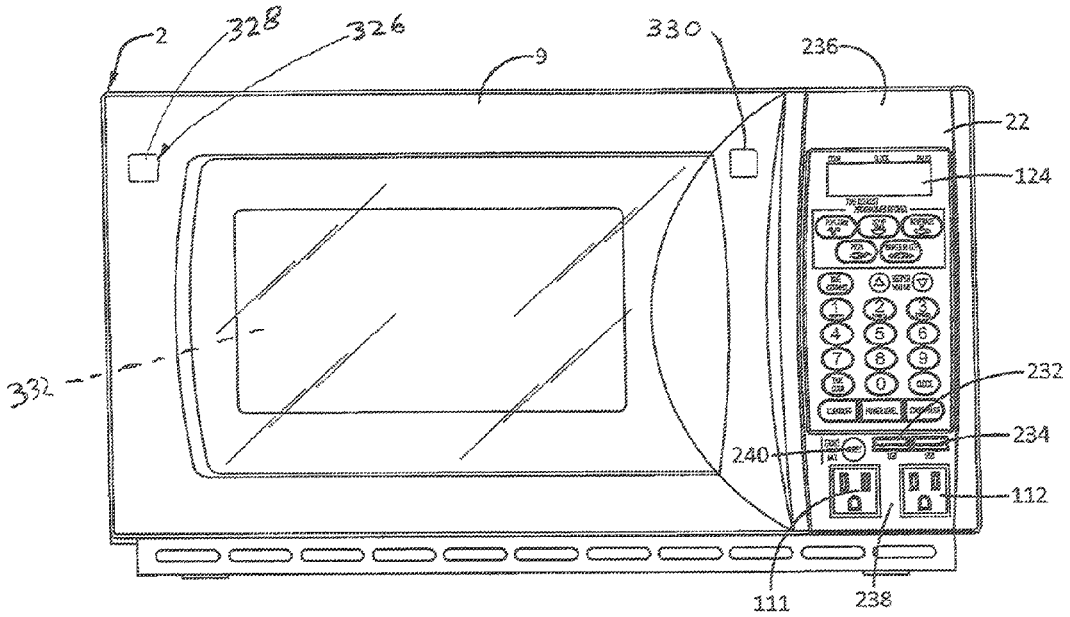

**Related U.S. Application Data**

which is a continuation of application No. 15/135,883, filed on Apr. 22, 2016, now Pat. No. 9,664,436, which is a continuation-in-part of application No. 14/262,290, filed on Apr. 25, 2014, now Pat. No. 9,657,974, which is a continuation-in-part of application No. 12/317,632, filed on Dec. 23, 2008, now Pat. No. 8,742,304, application No. 16/671,383, which is a continuation-in-part of application No. 15/239,378, filed on Aug. 17, 2016, now abandoned.

(60) Provisional application No. 61/009,419, filed on Dec. 28, 2007, provisional application No. 62/211,765, filed on Aug. 29, 2015, provisional application No. 62/262,954, filed on Dec. 4, 2015.

(51) **Int. Cl.**

| | |
|---|---|
| ***H05B 6/68*** | (2006.01) |
| ***F25D 23/12*** | (2006.01) |
| ***F25D 29/00*** | (2006.01) |

(58) **Field of Classification Search**

USPC ..... 219/482, 483, 485, 488, 678, 679, 695, 219/697, 702, 715, 716, 717, 718, 719, 219/720, 721, 722, 723, 756, 761

See application file for complete search history.

(56) **References Cited**

U.S. PATENT DOCUMENTS

| | | | | |
|---|---|---|---|---|
| 2004/0060932 | A1* | 4/2004 | Chun | H05B 6/6435 219/714 |
| 2008/0035035 | A1* | 2/2008 | Stone | F25D 23/12 109/1 R |
| 2014/0251987 | A1* | 9/2014 | Reay | H05B 6/6447 219/756 |
| 2015/0027353 | A1* | 1/2015 | Sagebiel | E05G 1/14 109/24 |

* cited by examiner

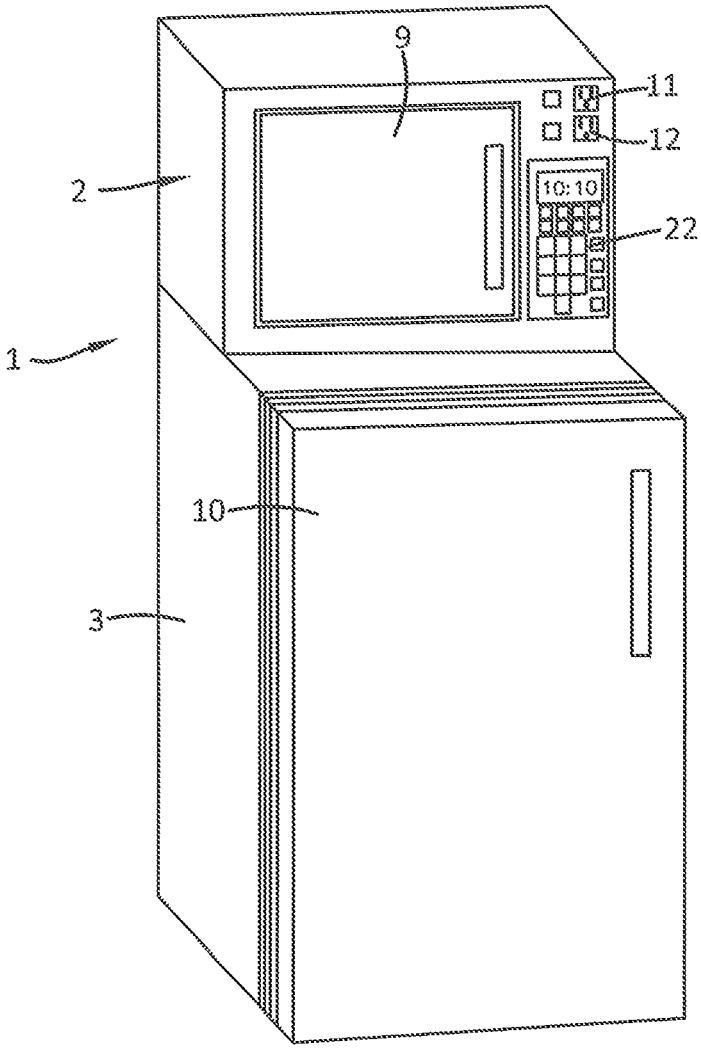


FIGURE 1

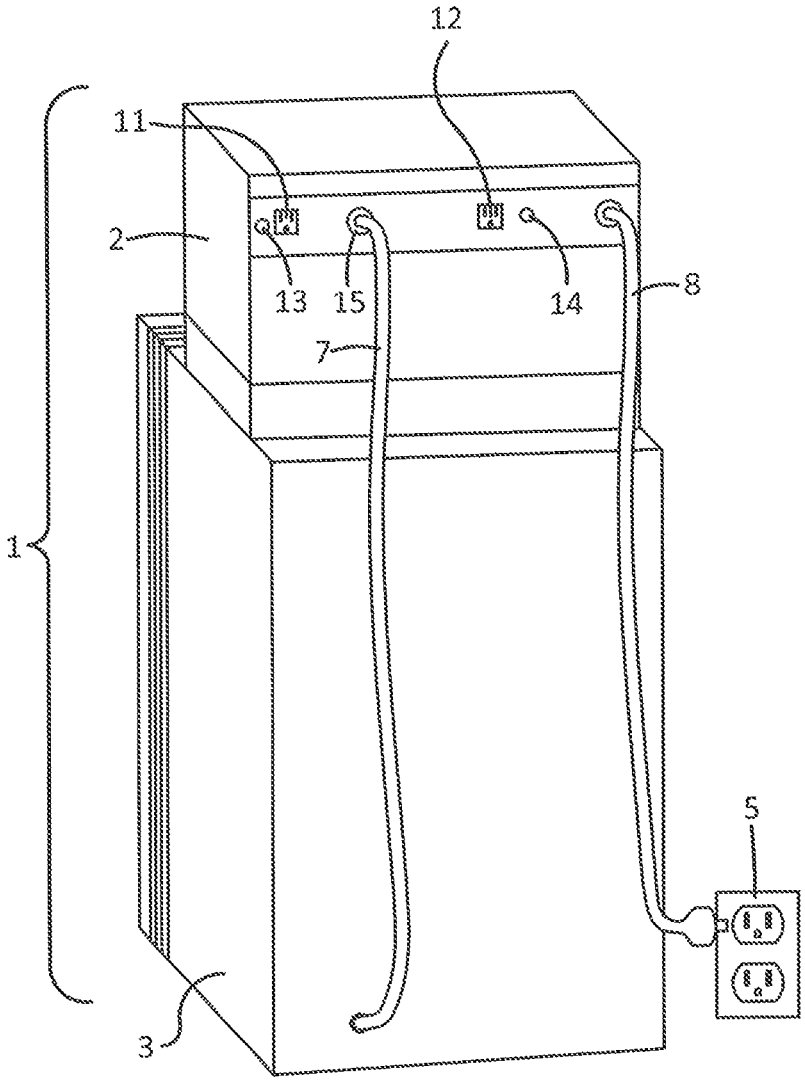


FIGURE 2

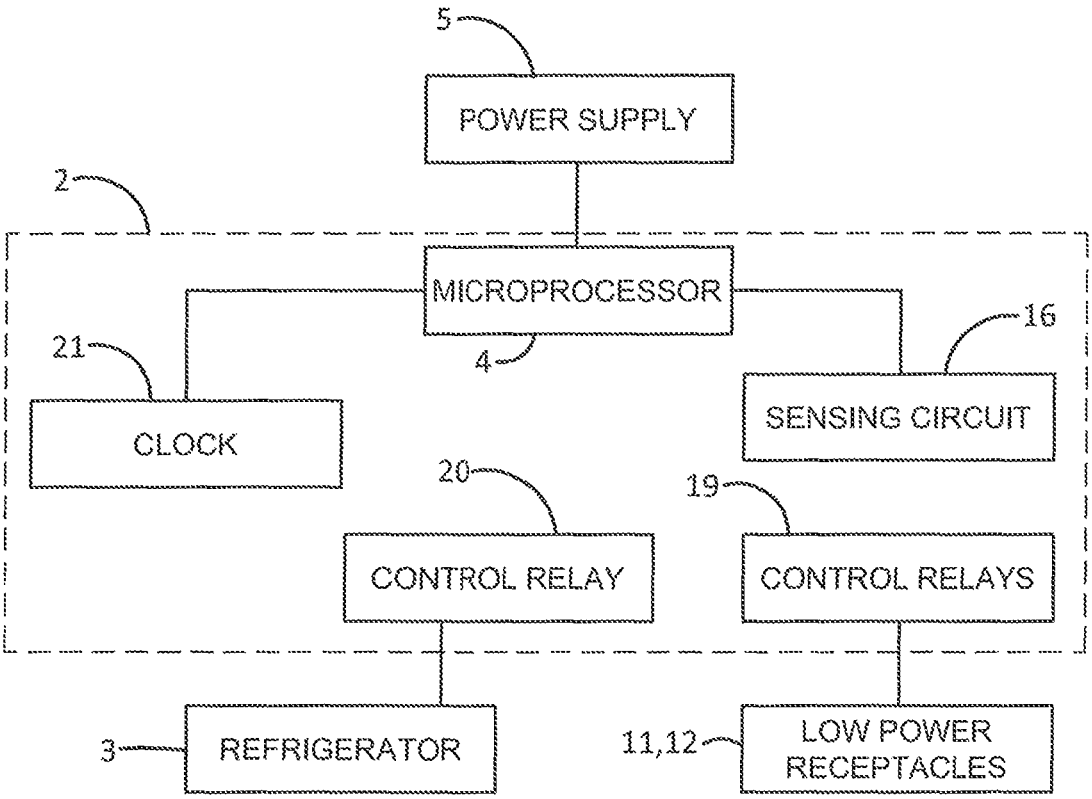
5
POWER SUPPLY
2
MICROPROCESSOR
4
16
21
SENSING CIRCUIT
CLOCK
20
19
CONTROL RELAY
CONTROL RELAYS
3
REFRIGERATOR
11,12
LOW POWER RECEPTACLES

FIGURE 3

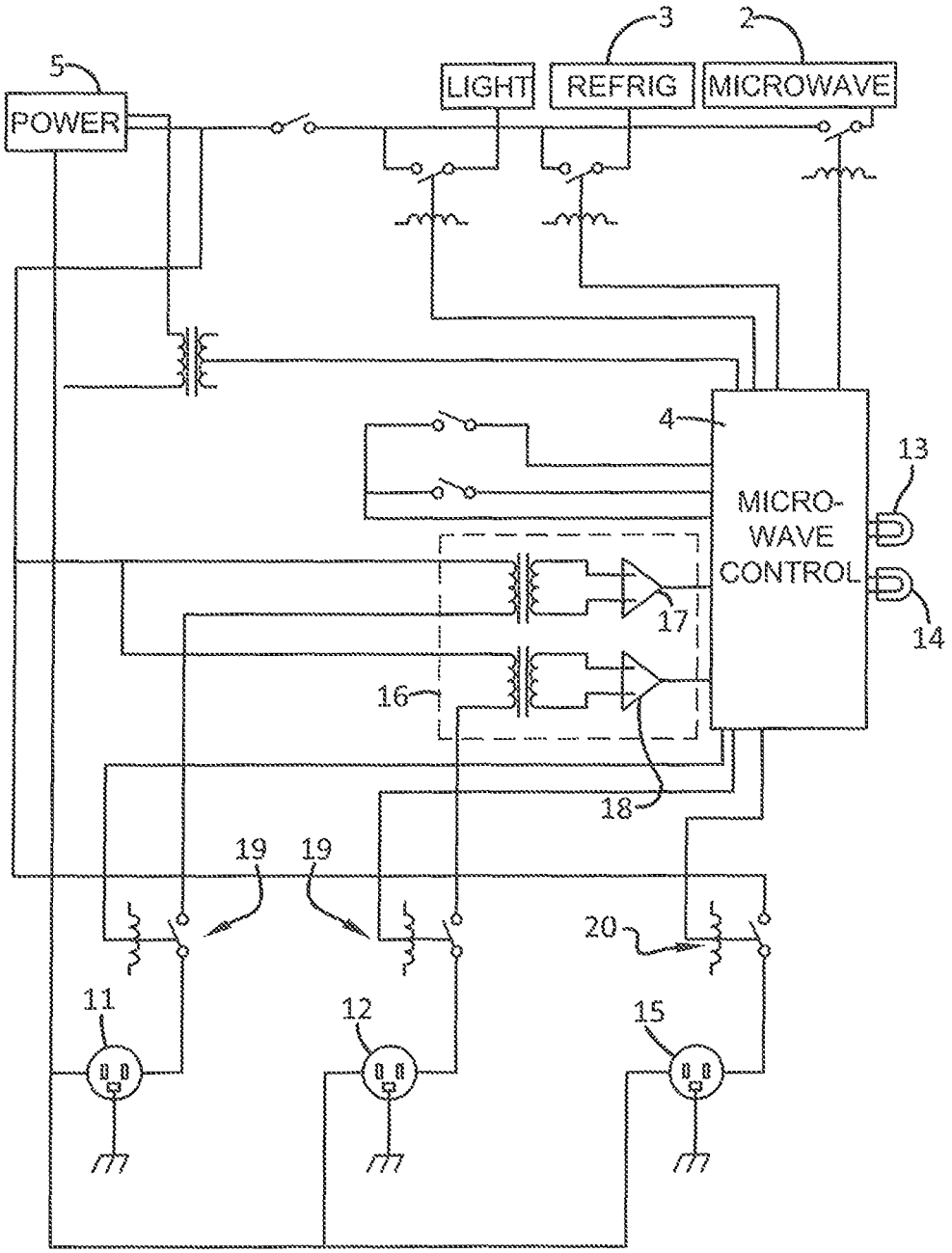
5
POWER
LIGHT
REFRIG
MICROWAVE
3
2
4
MICRO-
WAVE
CONTROL
13
14
17
16
18
19
19
20
11
12
15

FIGURE 4

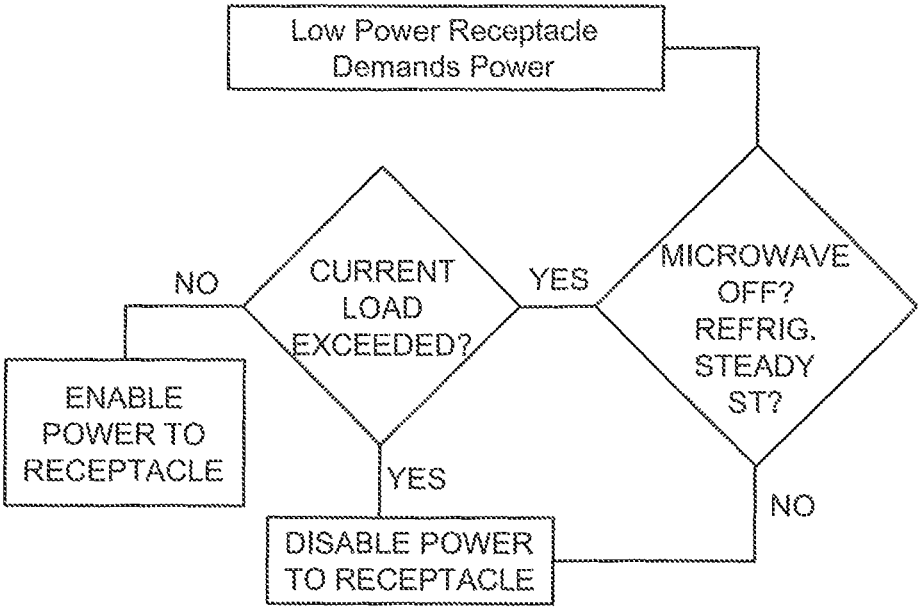


FIGURE 5

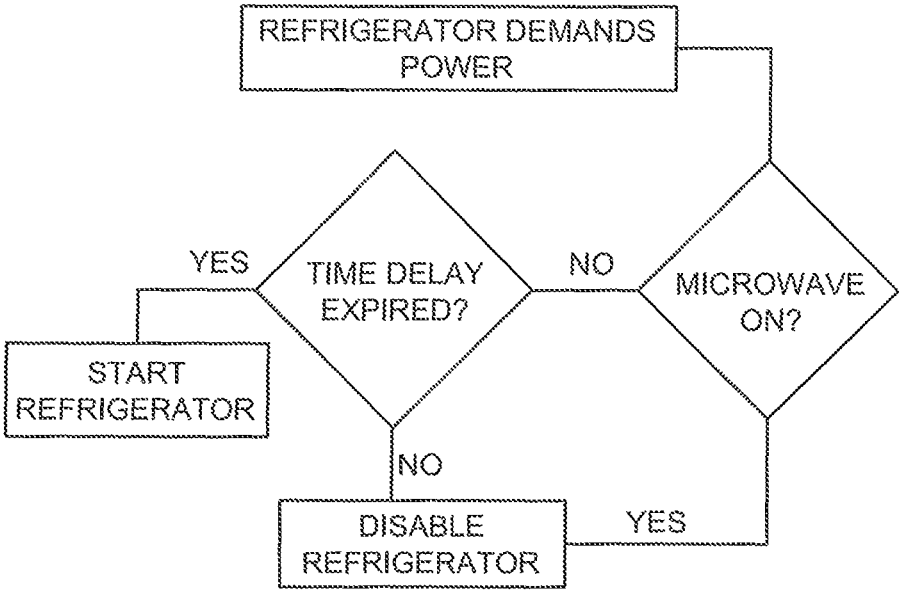


FIGURE 6

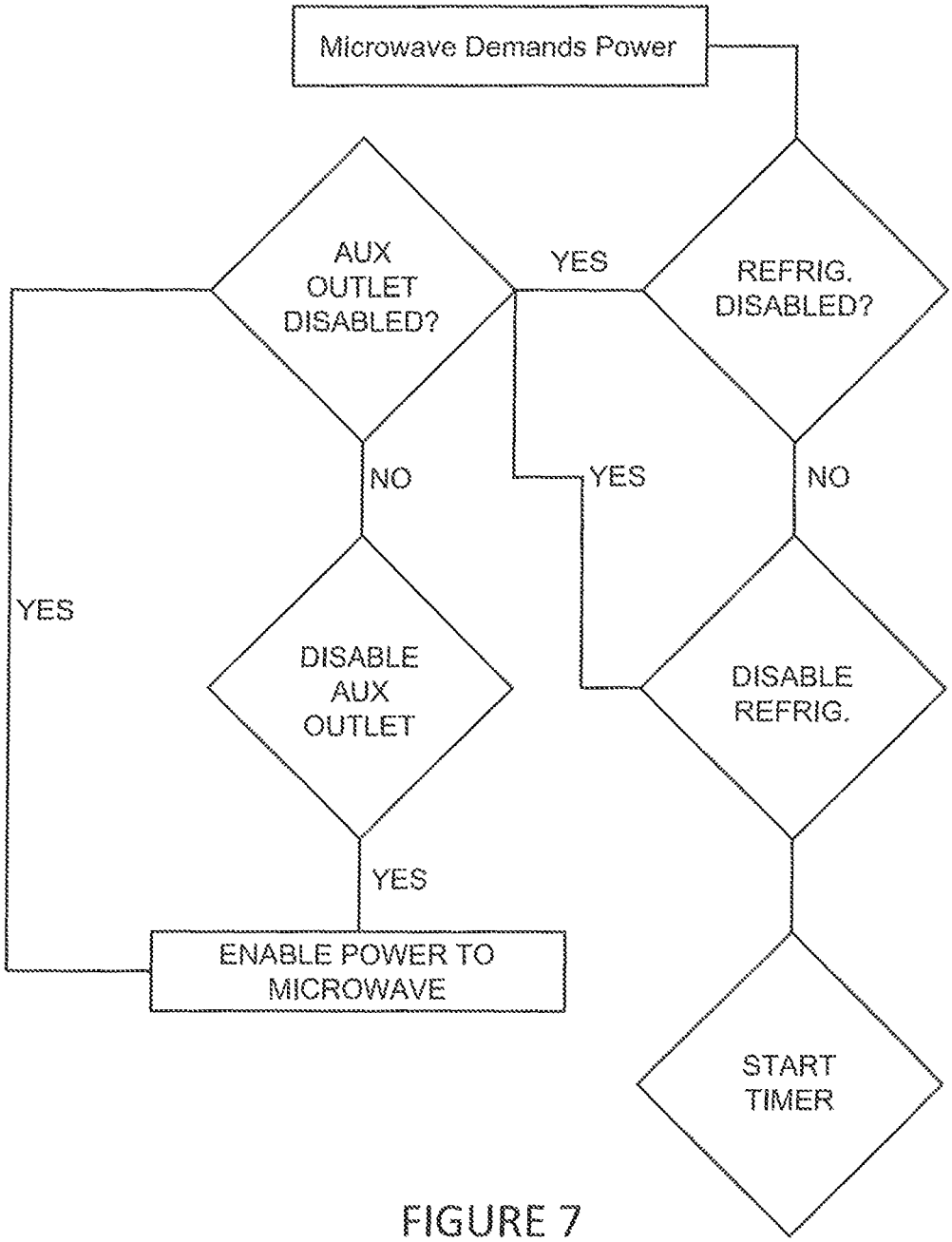
Microwave Demands Power
AUX OUTLET DISABLED?
YES
REFRIG. DISABLED?
NO
YES
NO
YES
DISABLE AUX OUTLET
DISABLE REFRIG.
YES
ENABLE POWER TO MICROWAVE
START TIMER

FIGURE 7

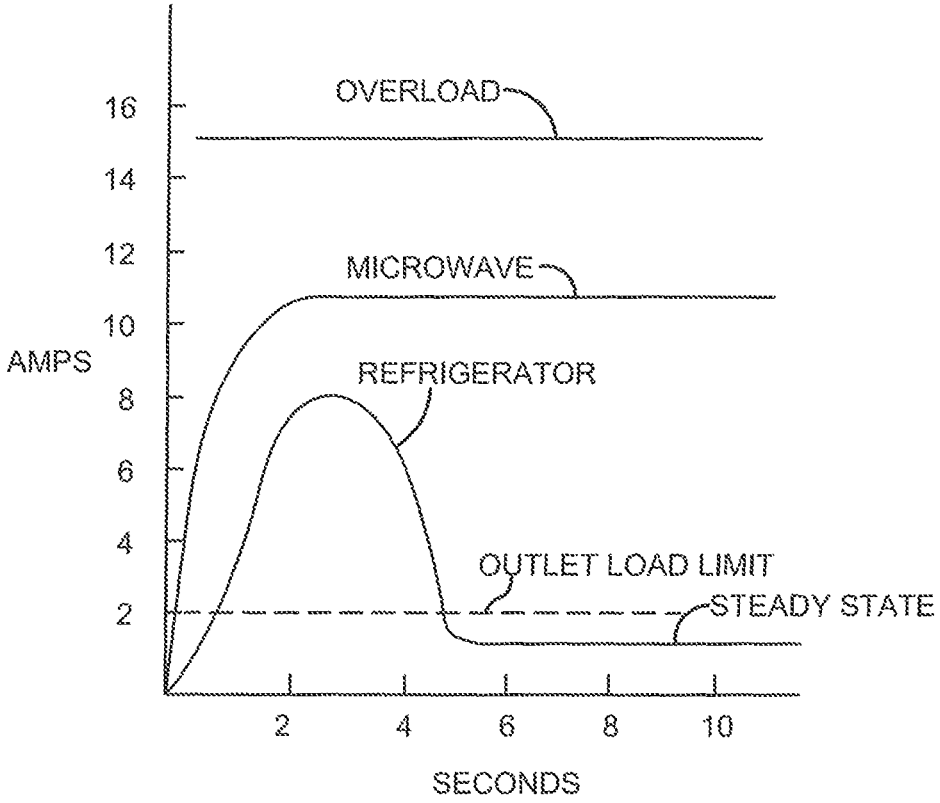
OVERLOAD
MICROWAVE
REFRIGERATOR
OUTLET LOAD LIMIT
STEADY STATE
AMPS
16
14
12
10
8
6
4
2
2
4
6
8
10
SECONDS

FIGURE 8

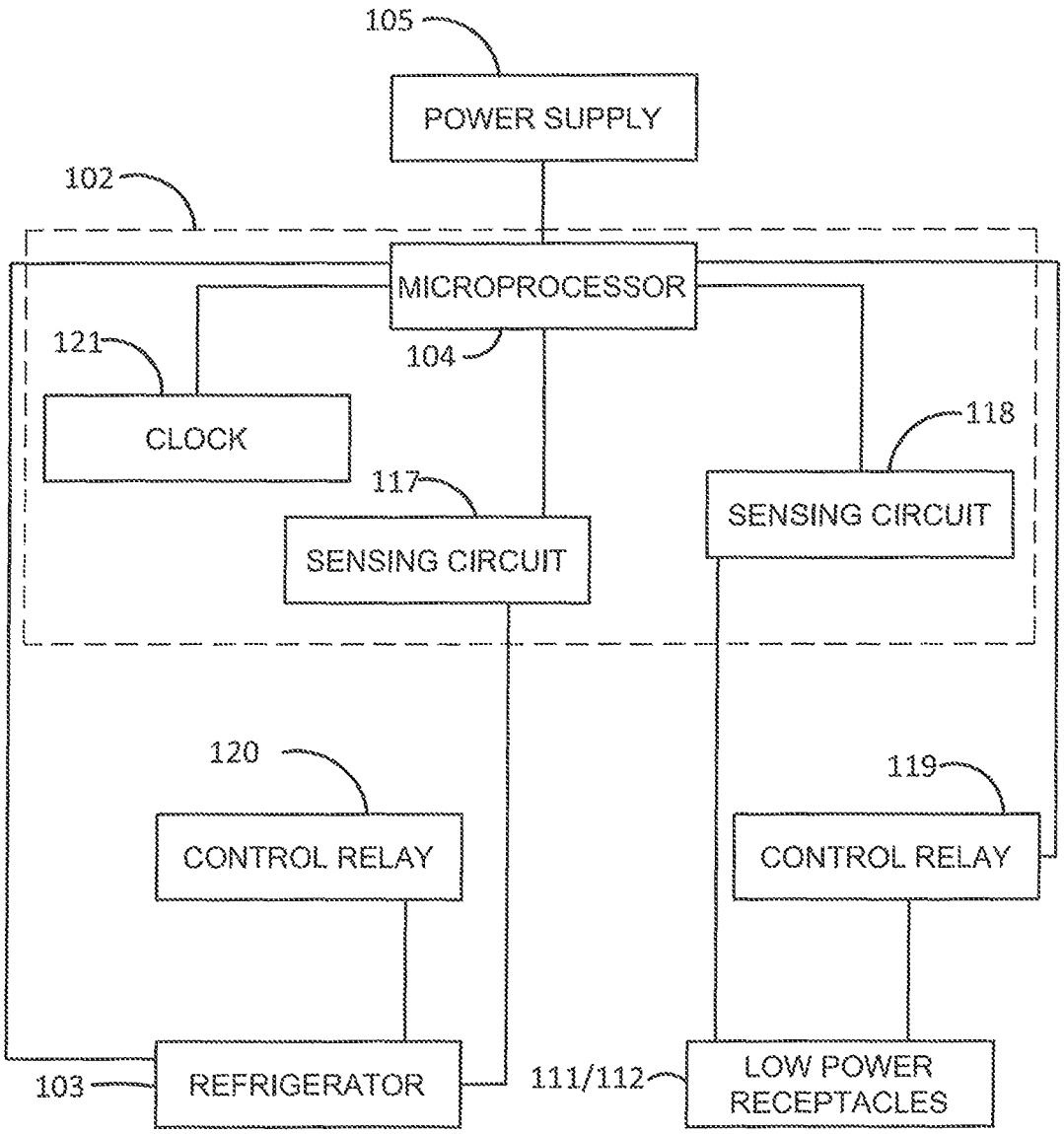
105
POWER SUPPLY
102
MICROPROCESSOR
104
121
CLOCK
117
SENSING CIRCUIT
118
SENSING CIRCUIT
120
CONTROL RELAY
119
CONTROL RELAY
103
REFRIGERATOR
111/112
LOW POWER RECEPTACLES

FIGURE 9

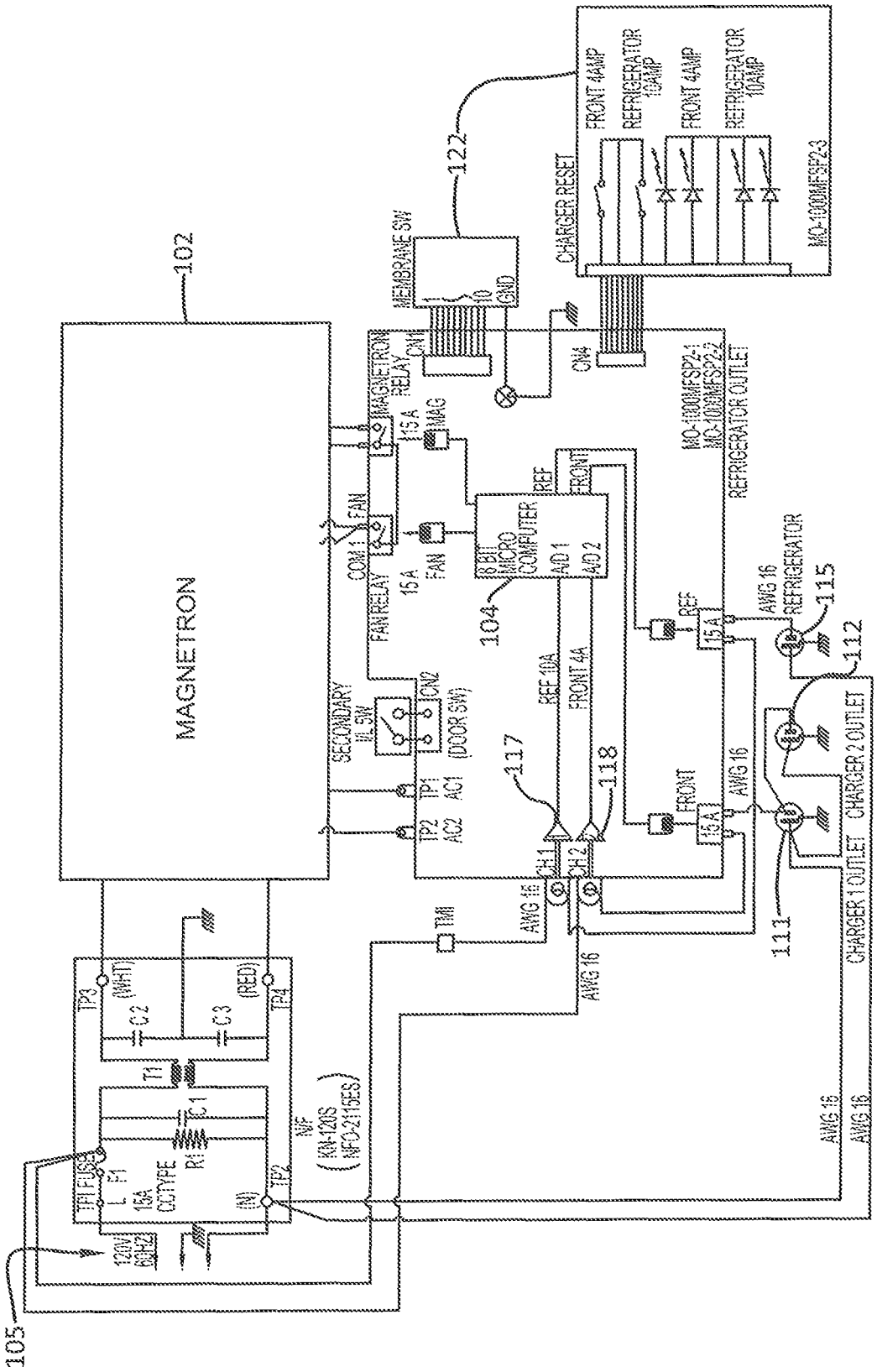
MAGNETRON
102
105
122
104
117
118
111
112
115
MEMBRANE SW
CHARGER RESET
FRONT 4AMP
REFRIGERATOR 10AMP
MAGNETRON RELAY
15 A
MAG
FAN RELAY
COM 1
FAN
8 BIT MICRO COMPUTER
A/D 1
A/D 2
REF
FRONT
REF 10A
FRONT 4A
SECONDARY I/L SW
CN2
(DOOR SW)
TP1
AC1
TP2
AC2
CH 1
CH 2
AWG 16
TMI
CN1
CN4
MO-1000MFSP2-1
MO-1000MFSP2-2
REFRIGERATOR OUTLET
REFRIGERATOR
CHARGER 1 OUTLET
CHARGER 2 OUTLET
TP3
(WHT)
TP4
(RED)
C 2
C 3
T1
C 1
R1
TP1 FUSE
F1
15A
OCTYPE
(N)
TP2
120V
60HZ
N/F
(KN-120S
NFO-2115ES)

FIGURE 10

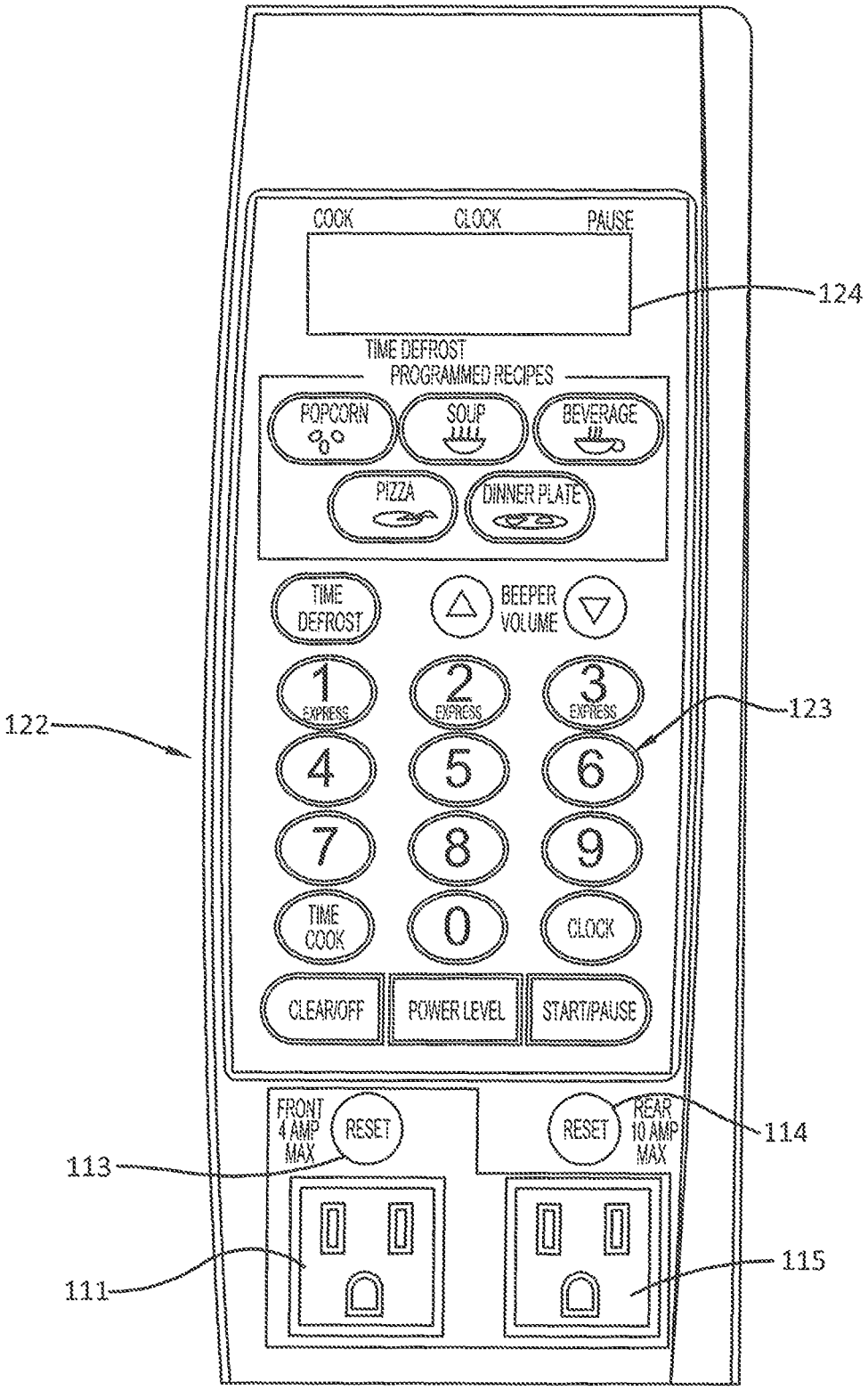
COOK
CLOCK
PAUSE
124
TIME DEFROST
PROGRAMMED RECIPES
POPCORN
SOUP
BEVERAGE
PIZZA
DINNER PLATE
TIME DEFROST
BEEPER VOLUME
1 EXPRESS
2 EXPRESS
3 EXPRESS
4
5
6
7
8
9
TIME COOK
0
CLOCK
CLEAR/OFF
POWER LEVEL
START/PAUSE
122
123
FRONT 4 AMP MAX
RESET
RESET
REAR 10 AMP MAX
114
113
111
115

FIGURE 11

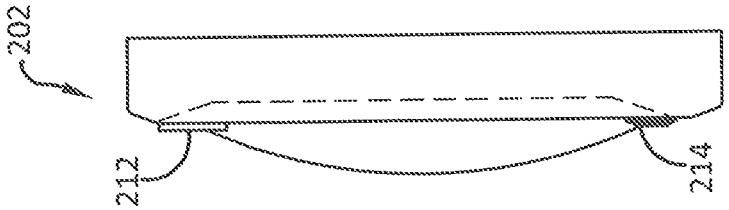


FIGURE 13

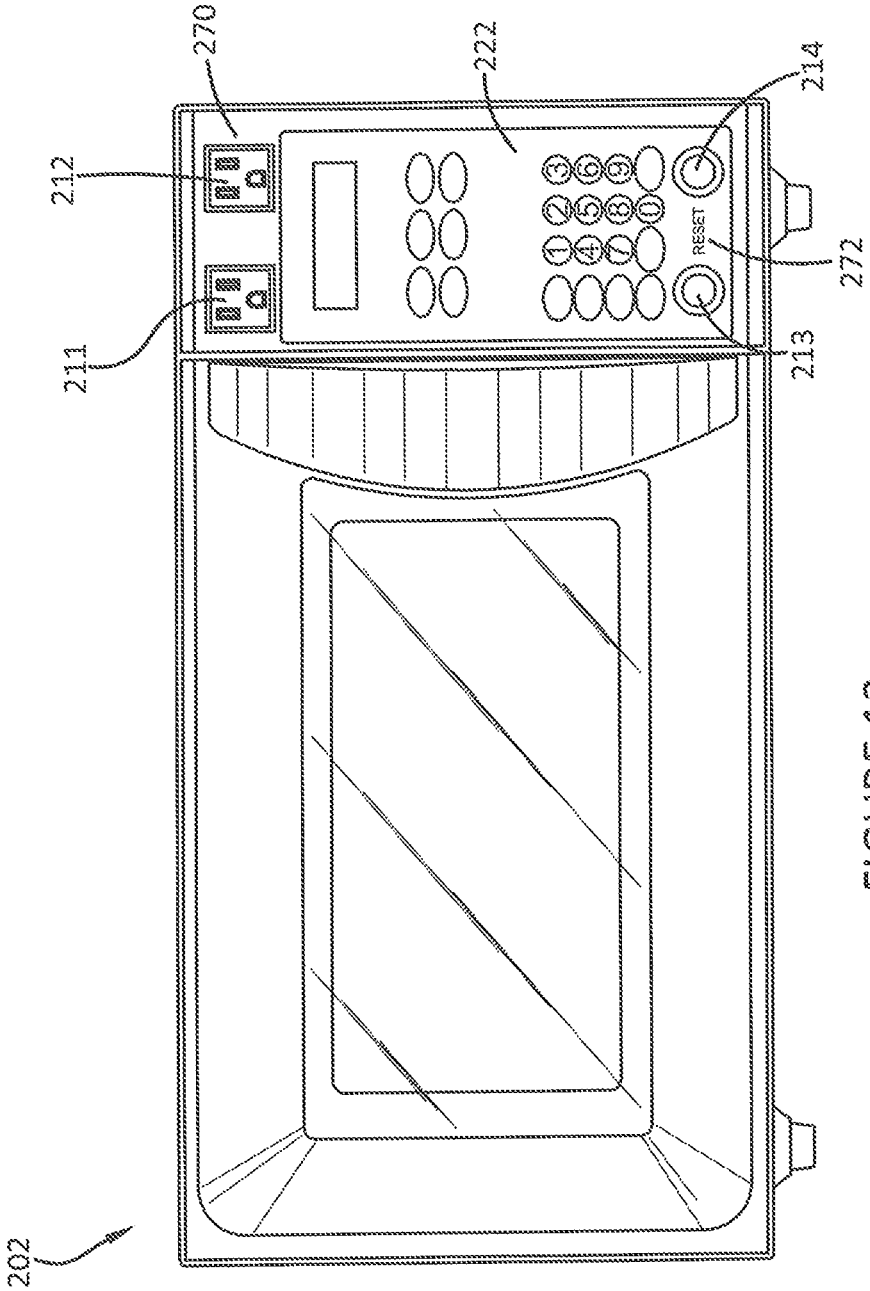


FIGURE 12

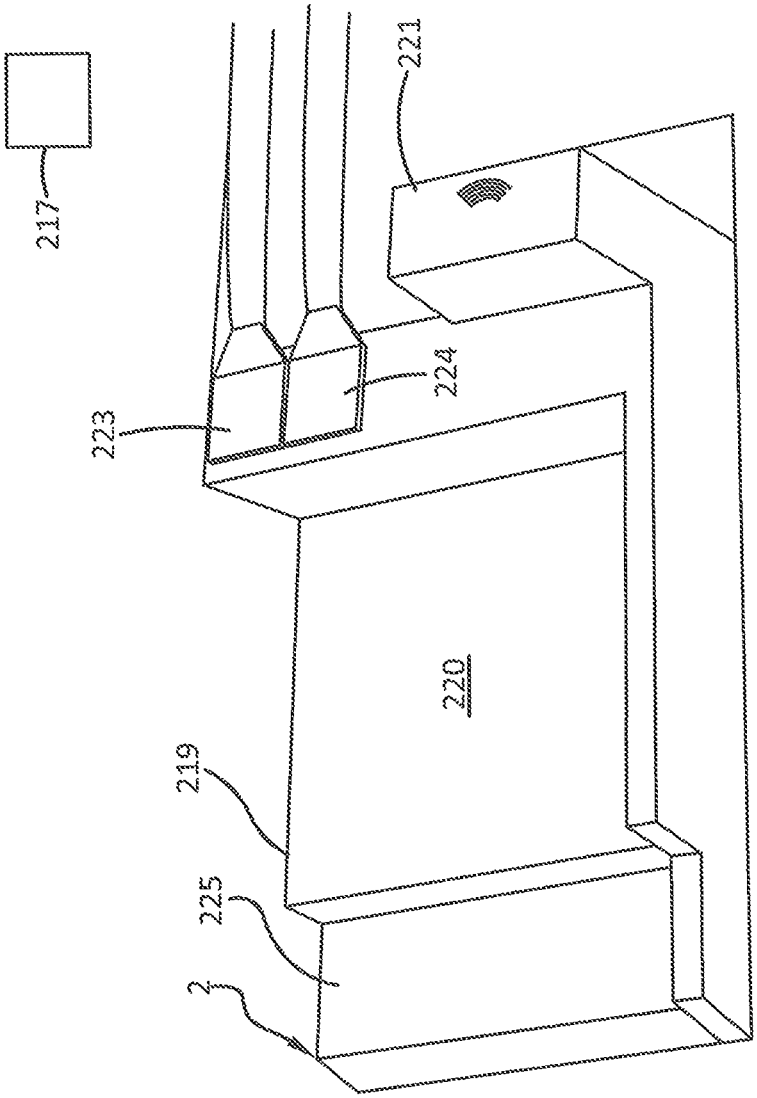


FIGURE 14

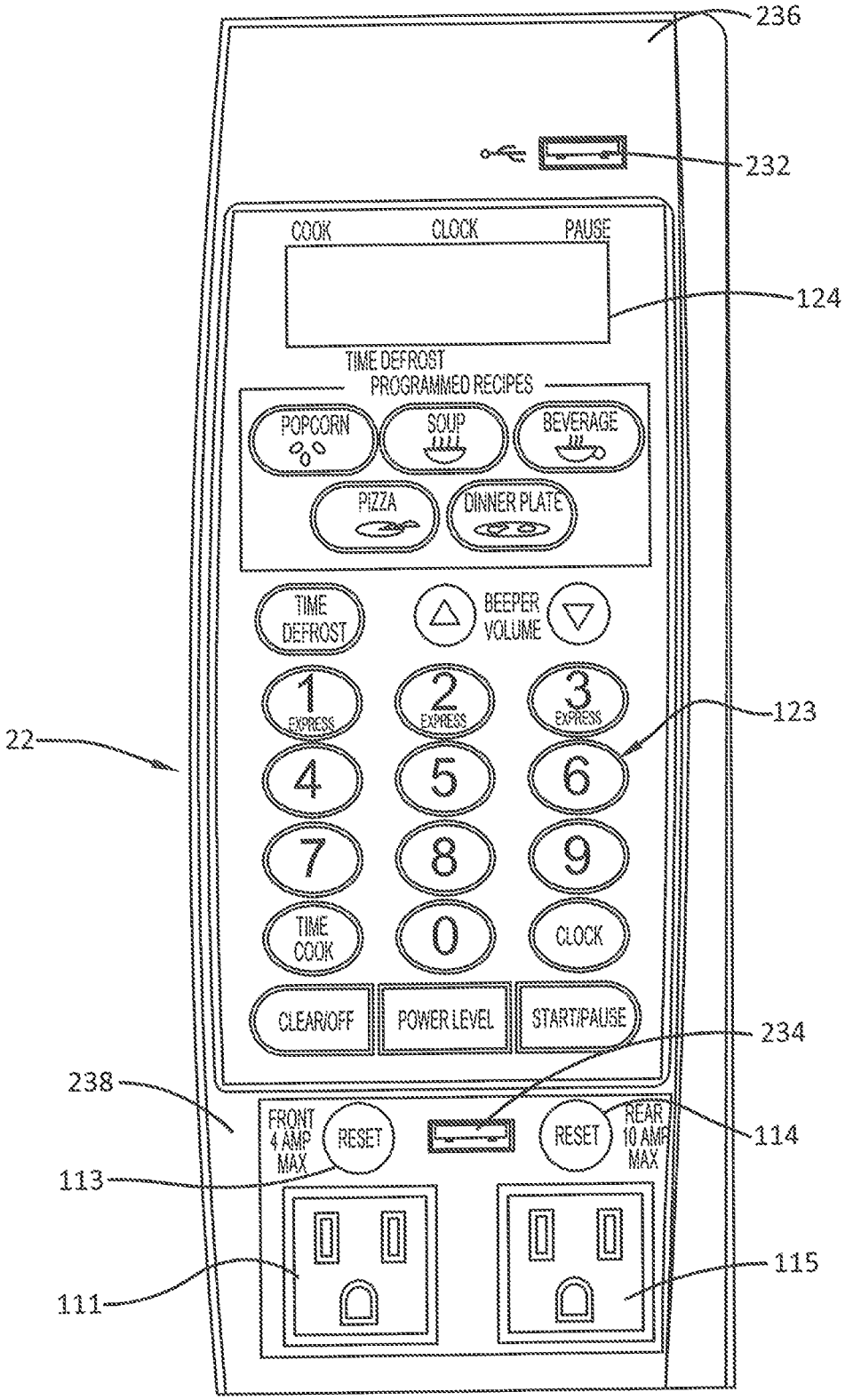
236
232
COOK
CLOCK
PAUSE
124
TIME DEFROST
PROGRAMMED RECIPES
POPCORN
SOUP
BEVERAGE
PIZZA
DINNER PLATE
TIME DEFROST
BEEPER VOLUME
1 EXPRESS
2 EXPRESS
3 EXPRESS
123
22
4
5
6
7
8
9
TIME COOK
0
CLOCK
CLEAR/OFF
POWER LEVEL
START/PAUSE
234
238
FRONT 4 AMP MAX
RESET
RESET
REAR 10 AMP MAX
114
113
115
111

FIGURE 15

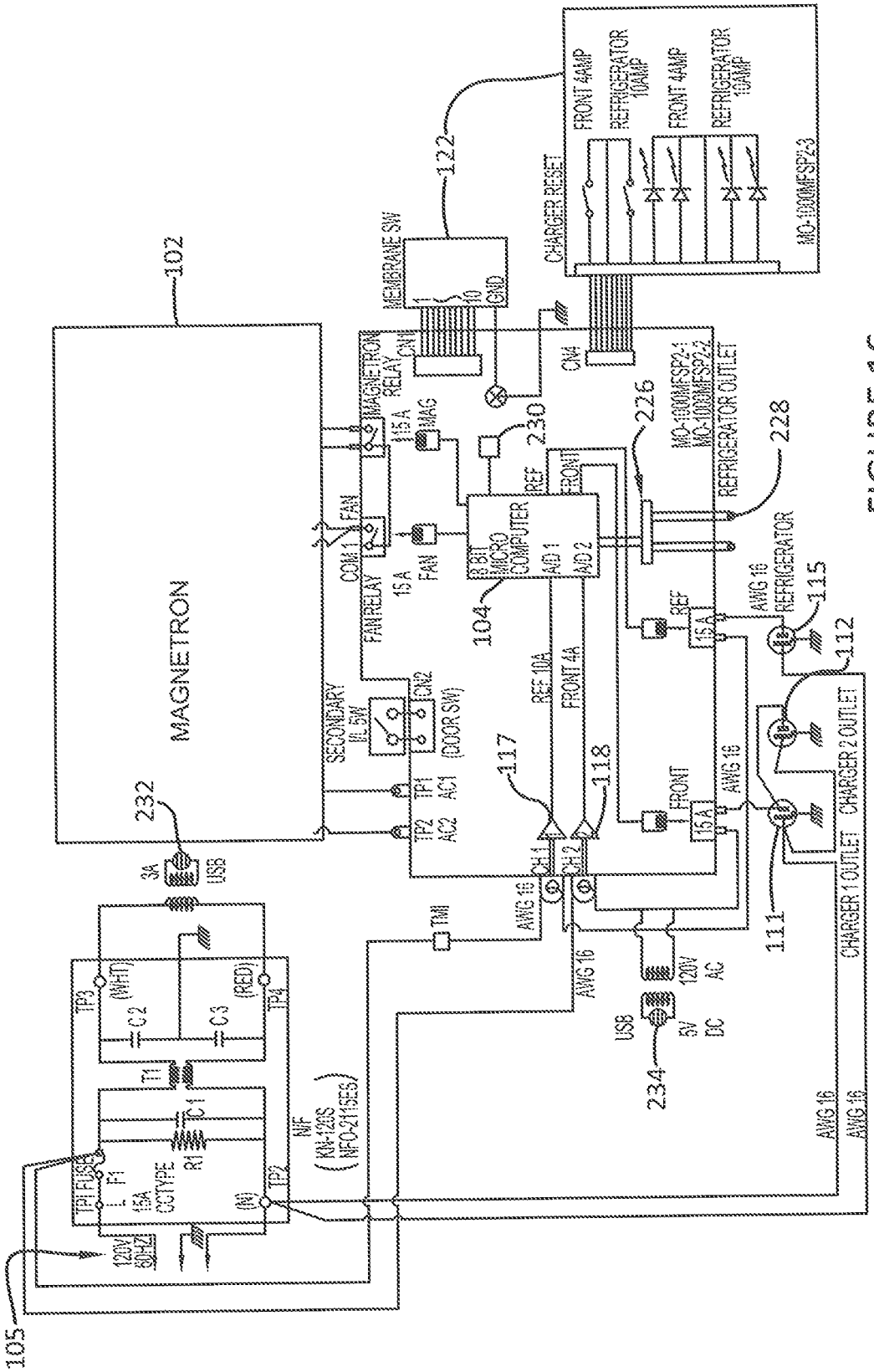
MAGNETRON
102
105
122
104
117
118
230
226
228
232
234
111
112
115
MEMBRANE SW
CHARGER RESET
FRONT 4AMP
REFRIGERATOR 10AMP
MO-1000MFSP2-3
MAGNETRON RELAY
FAN RELAY
SECONDARY I/L SW
(DOOR SW)
8 BIT MICRO COMPUTER
A/D 1
A/D 2
REF
FRONT
REF 10A
FRONT 4A
AWG 16
REFRIGERATOR
REFRIGERATOR OUTLET
CHARGER 2 OUTLET
CHARGER 1 OUTLET
120V AC
5V DC
USB
3A
TMI
NIF
(KN-120S NFO-211SES)
120V 60HZ
15A CCTYPE
TP1 FUSE
F1
R1
C1
T1
C2
C3
TP2
TP3
TP4
(WHT)
(RED)
(N)
CN1
CN2
CN4
MAG
FAN
COM 1
15 A
CH 1
CH 2
TP1 AC1
TP2 AC2

FIGURE 16

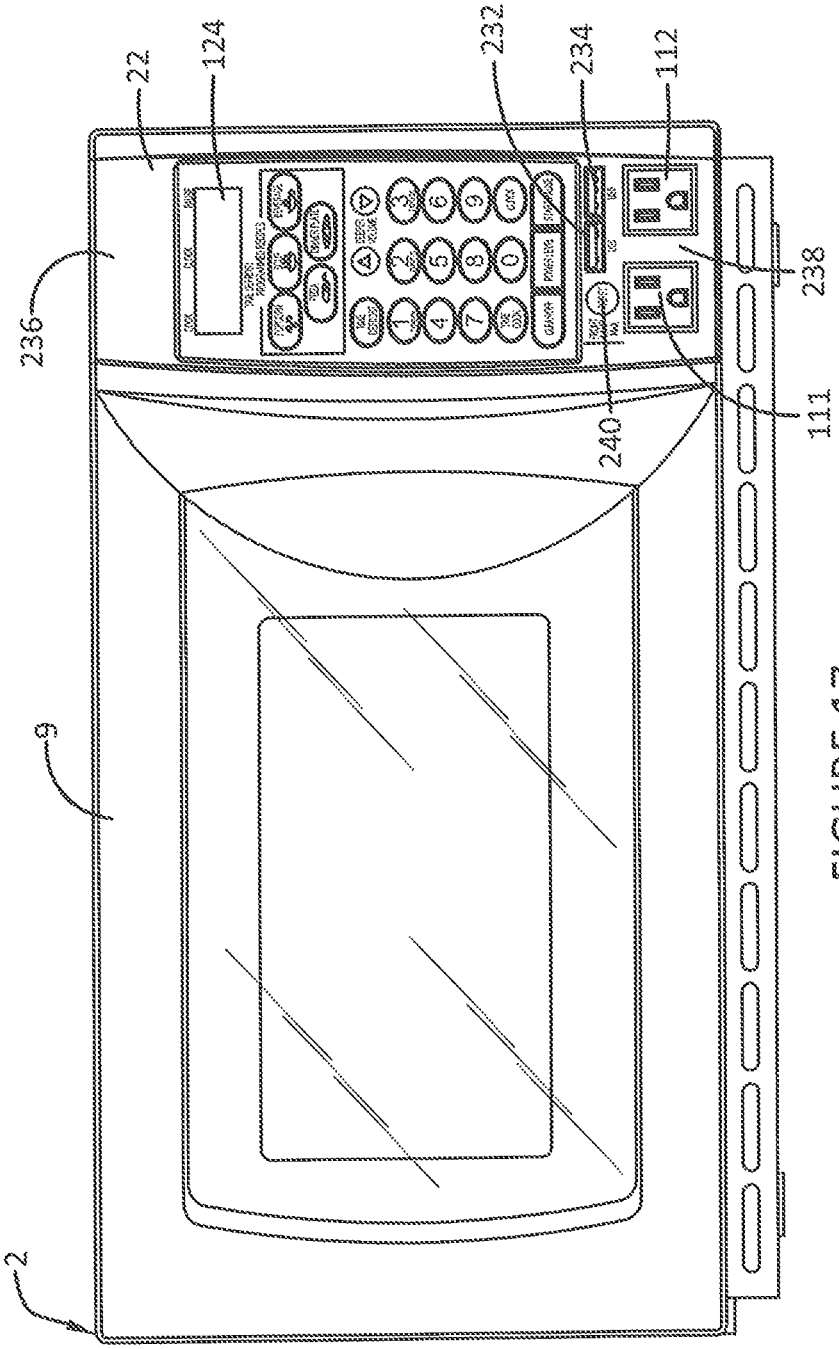


FIGURE 17

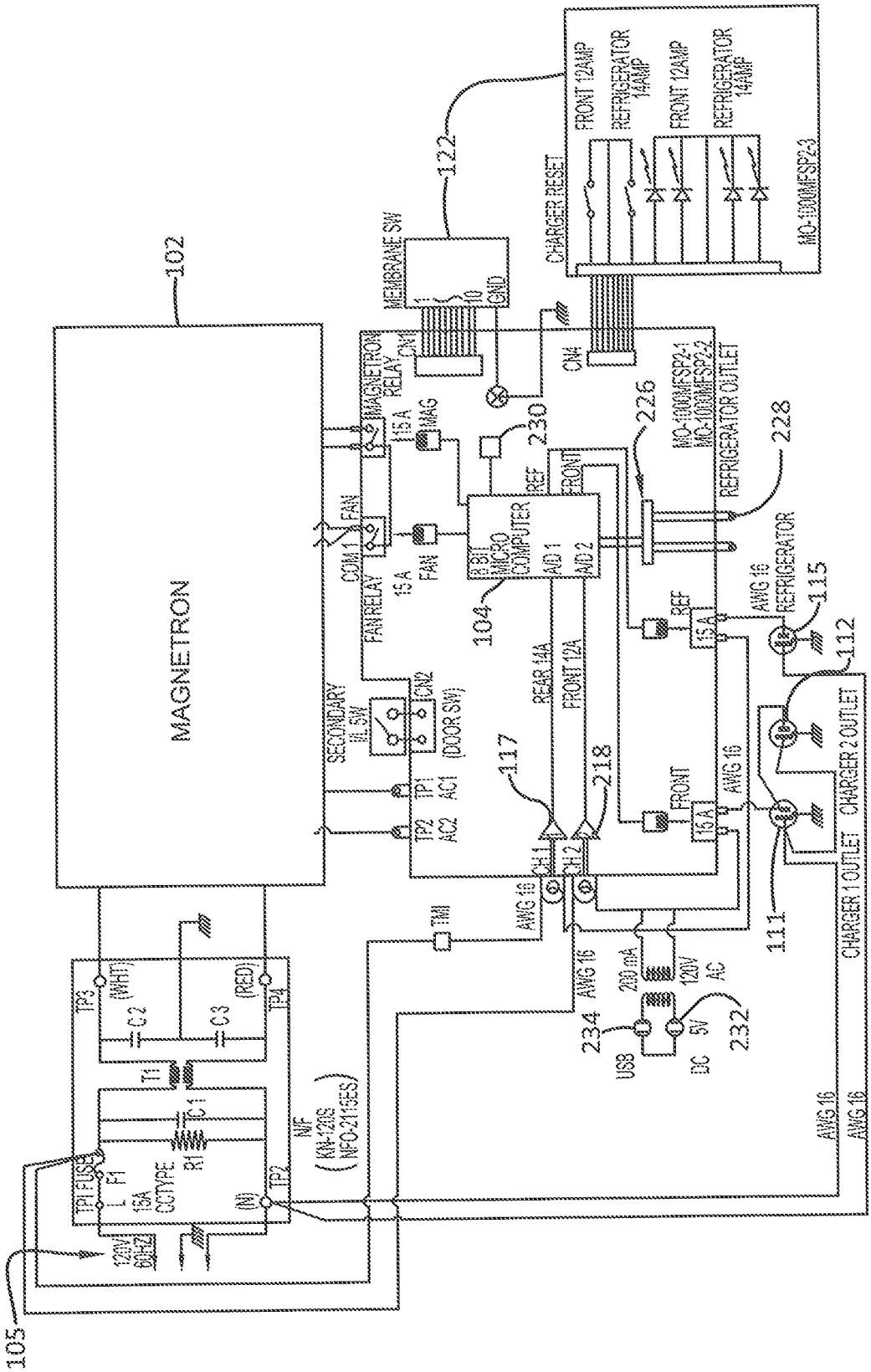
MAGNETRON
102
105
122
MEMBRANE SW
CHARGER RESET
FRONT 12AMP
REFRIGERATOR 14AMP
FRONT 12AMP
REFRIGERATOR 14AMP
MO-1000MFSP2-3
MAGNETRON RELAY
15 A
MAG
230
226
228
REFRIGERATOR OUTLET
MO-1000MFSP2-1
MO-1000MFSP2-2
FAN
COM 1
FAN RELAY
15 A
FAN
8 BIT MICRO COMPUTER
A/D 1
A/D 2
REF
FRONT
104
REAR 14A
FRONT 12A
REF
15 A
AWG 16
REFRIGERATOR
115
112
SECONDARY IIL SW
CN2
(DOOR SW)
TP1
AC1
TP2
AC2
117
218
FRONT
15 A
AWG 16
CHARGER 2 OUTLET
CHARGER 1 OUTLET
111
CH 1
CH 2
AWG 16
TMI
AWG 16
200 mA
120V
AC
234
USB
DC
5V
232
TP3
(WHT)
C 2
C 3
(RED)
TP4
T1
C 1
R1
TP1 FUSE
F1
L
15A
CCTYPE
(N)
TP2
N/F
(KN-120S
NFO-2115ES)
120V
60HZ
AWG 16
AWG 16

FIGURE 18

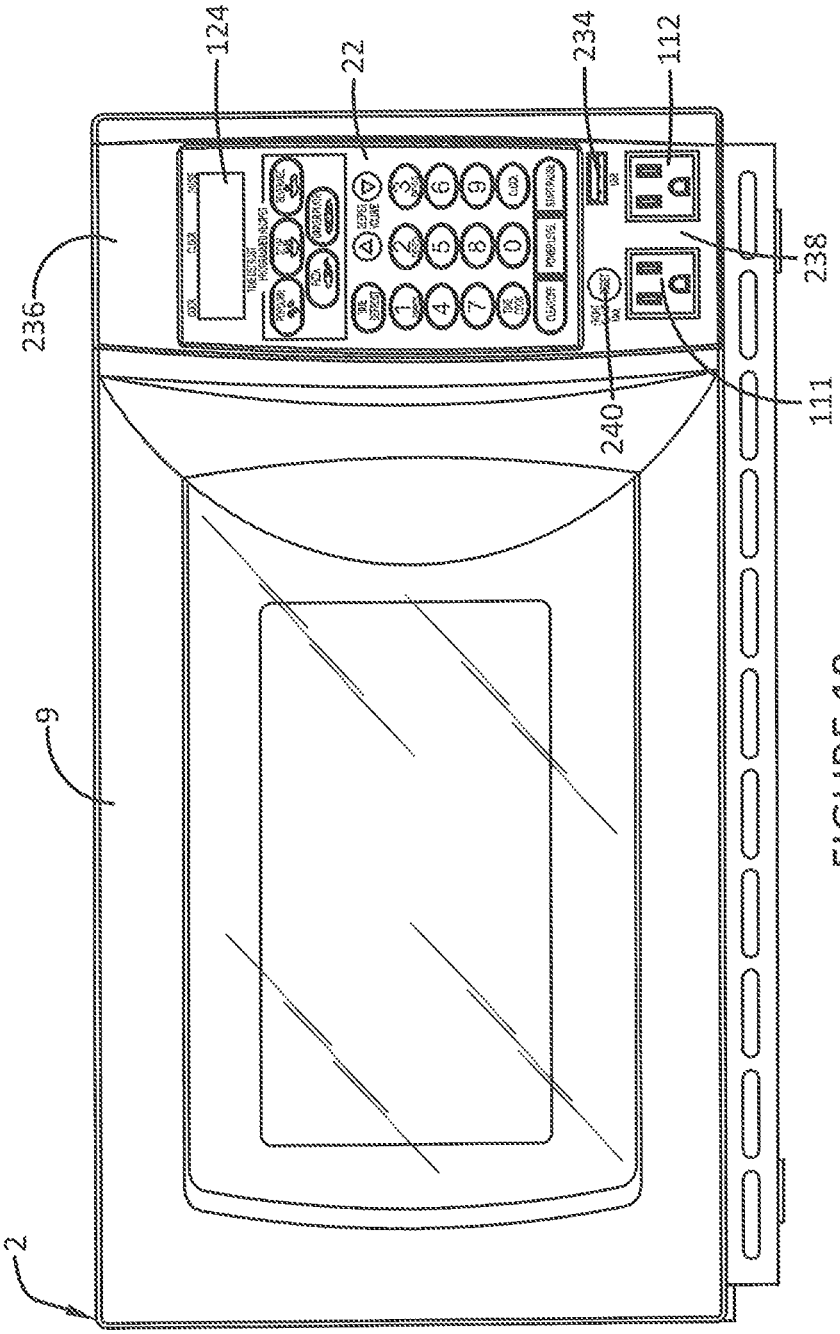


FIGURE 19

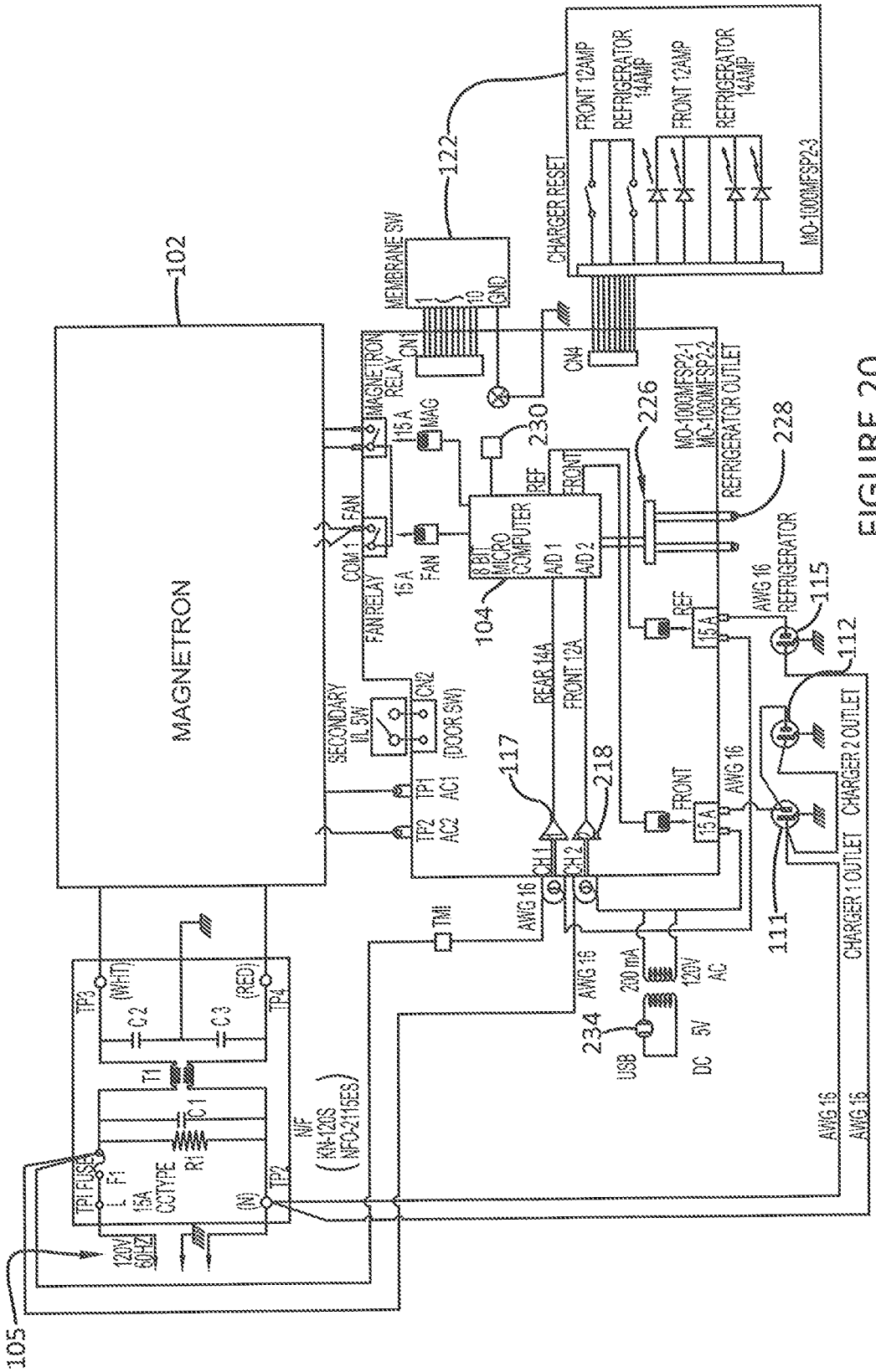
MAGNETRON
102
105
122
104
117
218
226
228
230
234
111
112
115
MEMBRANE SW
CHARGER RESET
FRONT 12AMP
REFRIGERATOR 14AMP
MO-1000MFSP2-3
MAGNETRON RELAY
15 A
MAG
FAN
FAN RELAY
COM 1
8 BIT MICRO COMPUTER
A/D 1
A/D 2
REF
FRONT
REAR 14A
FRONT 12A
SECONDARY IL SW
CN2
(DOOR SW)
TP1
AC1
TP2
AC2
CH 1
CH 2
AWG 16
TMI
MO-1000MFSP2-1
MO-1000MFSP2-2
REFRIGERATOR OUTLET
REFRIGERATOR
CHARGER 2 OUTLET
CHARGER 1 OUTLET
200 mA
120V AC
USB
DC 5V
TP3
(WHT)
C2
C3
(RED)
TP4
T1
C1
R1
TP1 FUSE
F1
15A
CCTYPE
(N)
TP2
N/F
(KN-120S
NFO-2115ES)
120V
60HZ

FIGURE 20

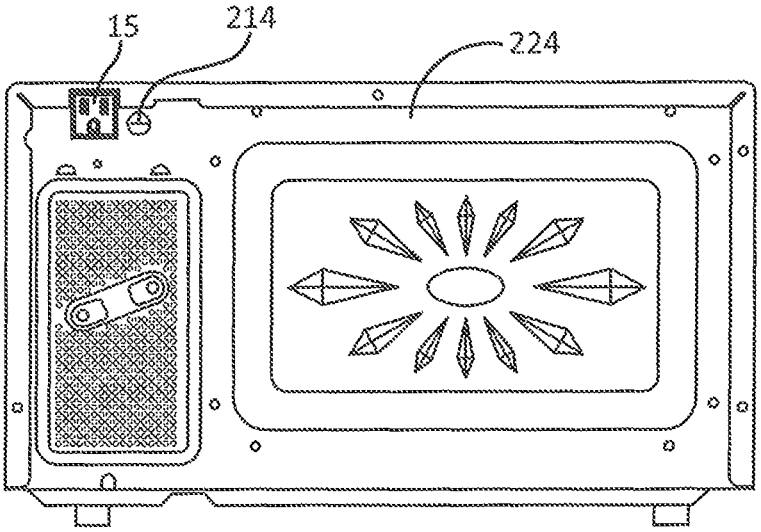


FIGURE 21

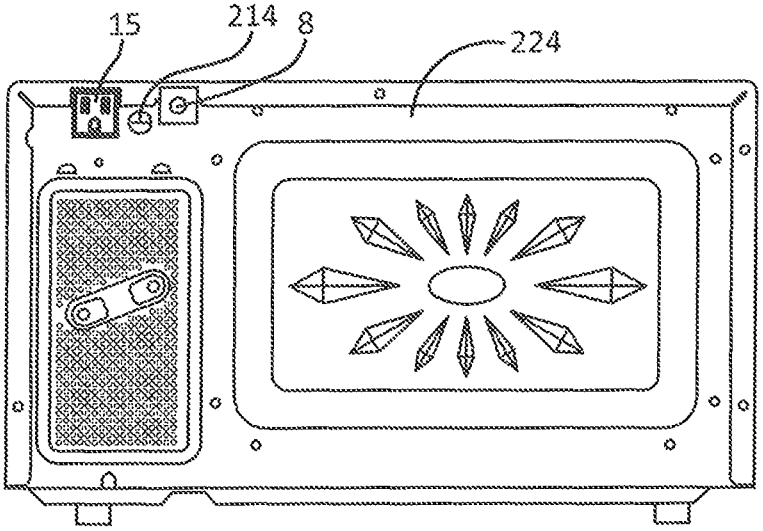


FIGURE 22

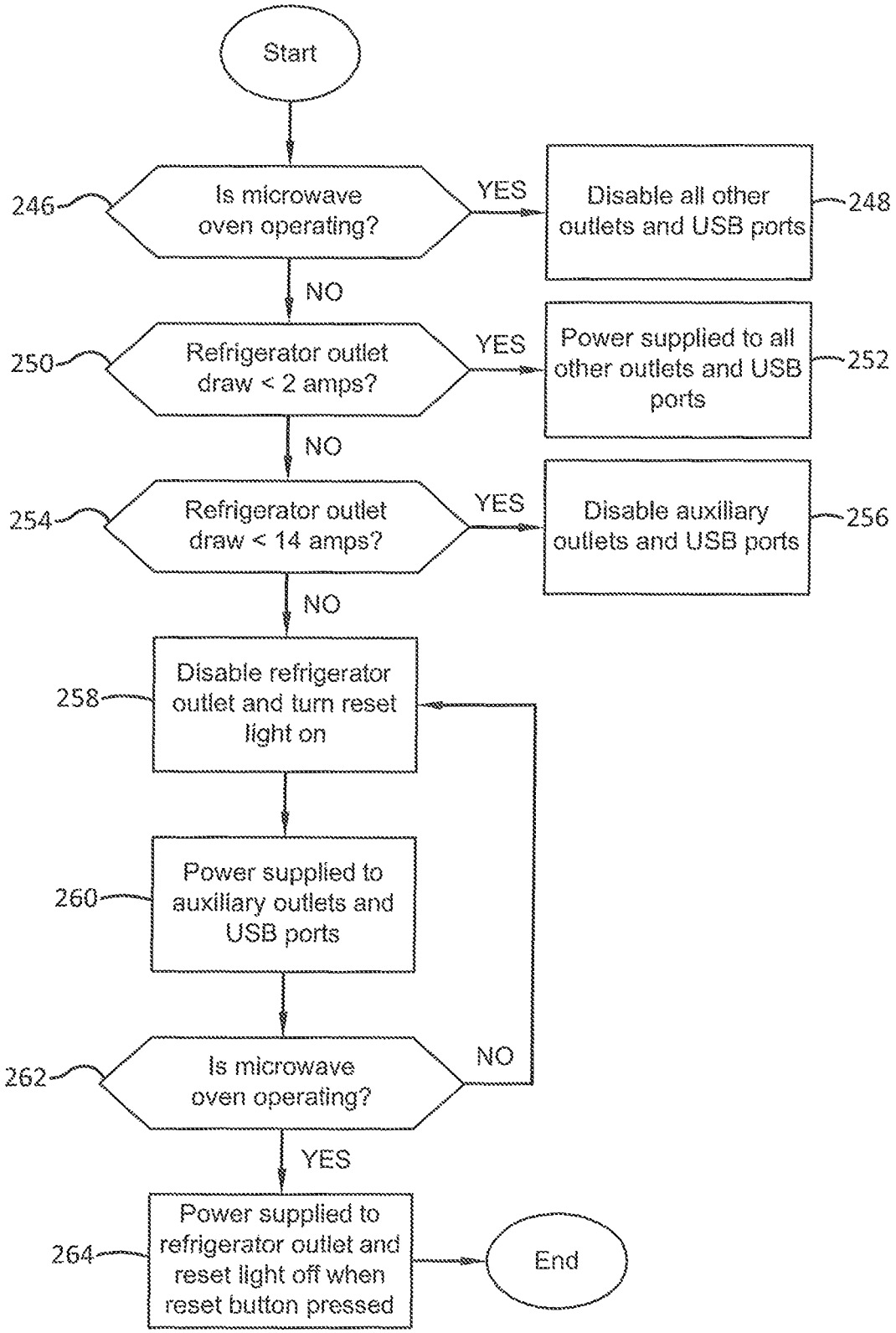
Start
246
Is microwave oven operating?
YES
Disable all other outlets and USB ports
248
NO
250
Refrigerator outlet draw < 2 amps?
YES
Power supplied to all other outlets and USB ports
252
NO
254
Refrigerator outlet draw < 14 amps?
YES
Disable auxiliary outlets and USB ports
256
NO
258
Disable refrigerator outlet and turn reset light on
260
Power supplied to auxiliary outlets and USB ports
262
Is microwave oven operating?
NO
YES
264
Power supplied to refrigerator outlet and reset light off when reset button pressed
End

FIGURE 23

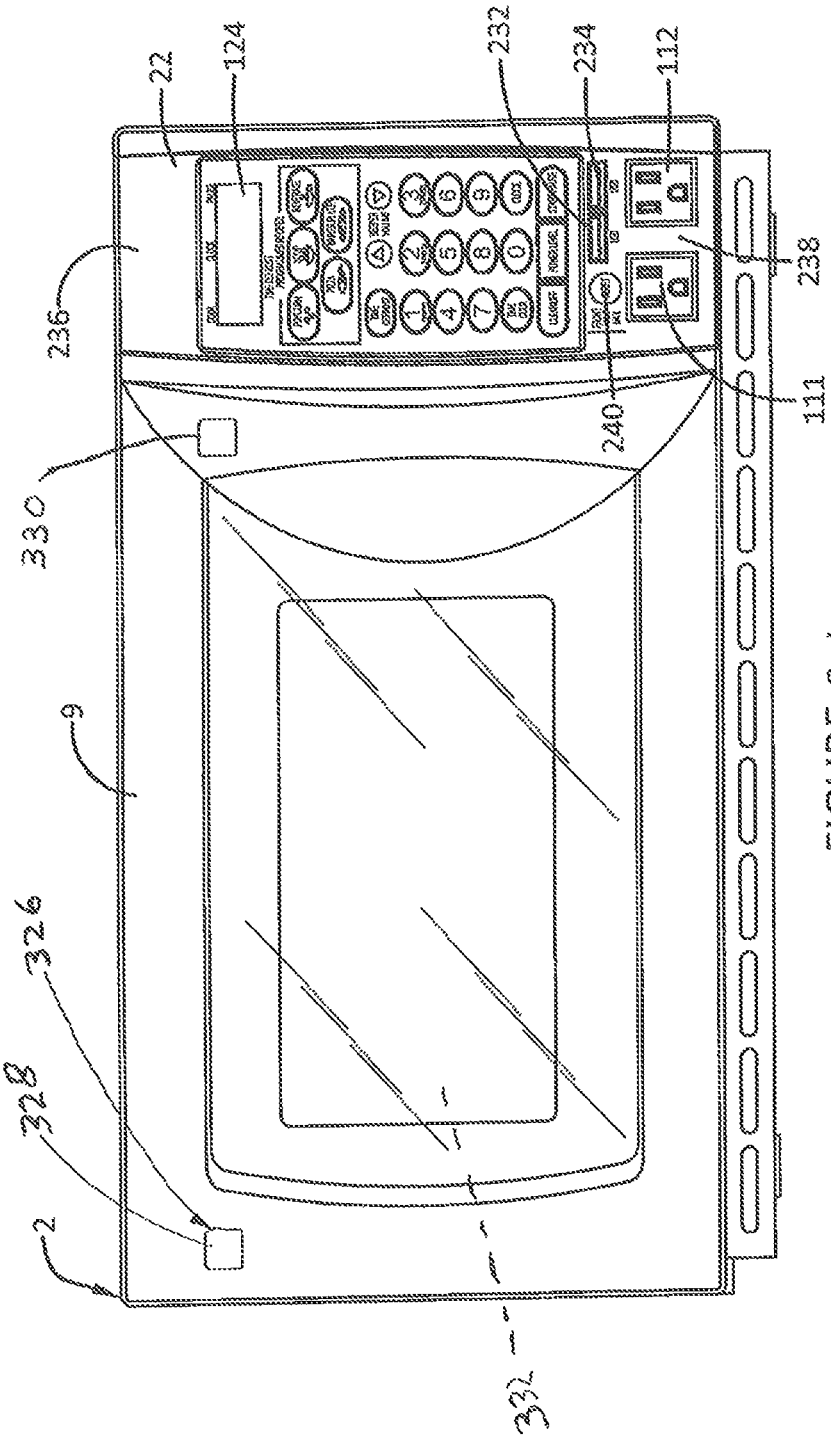


FIGURE 24

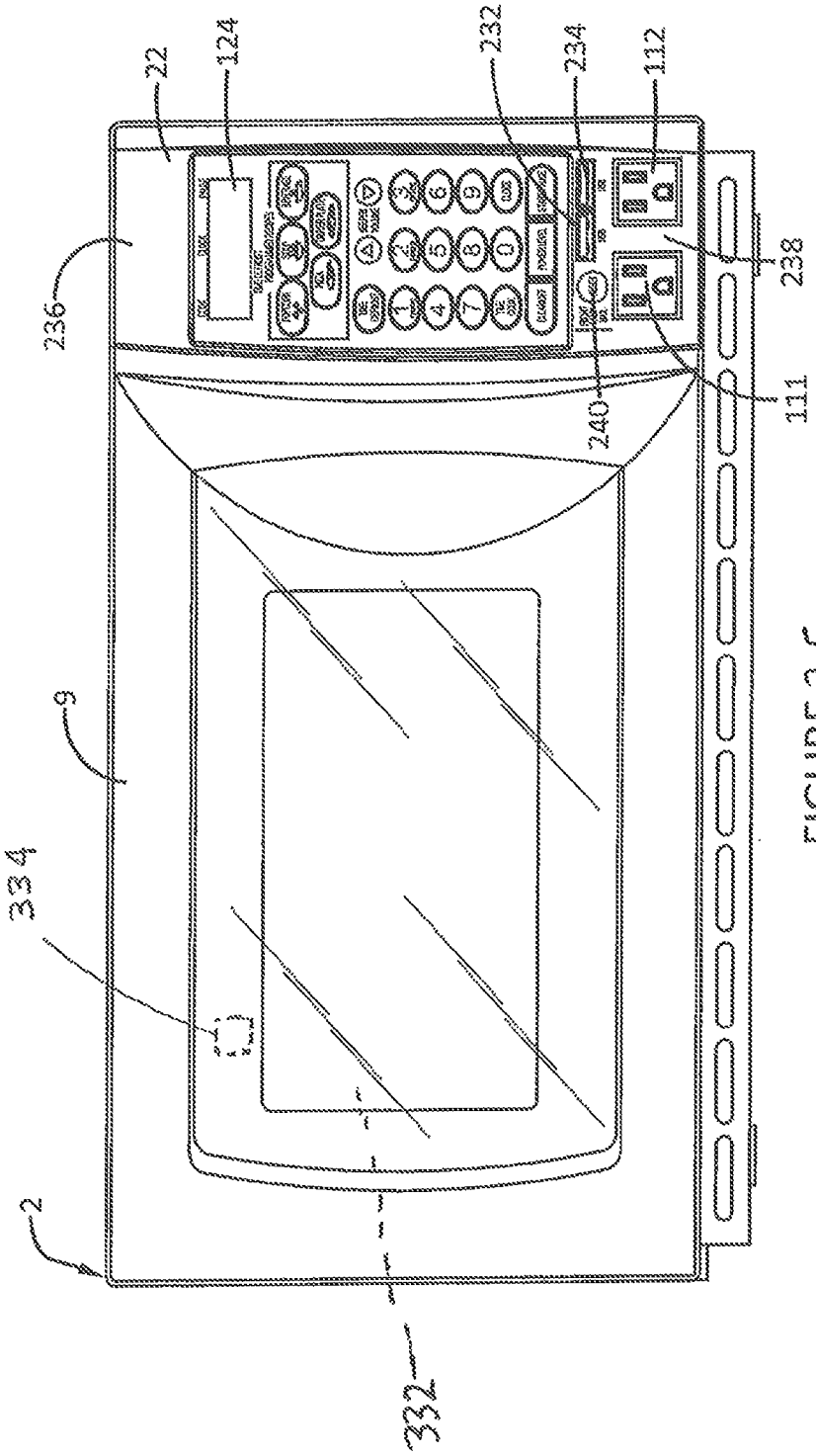


FIGURE 25

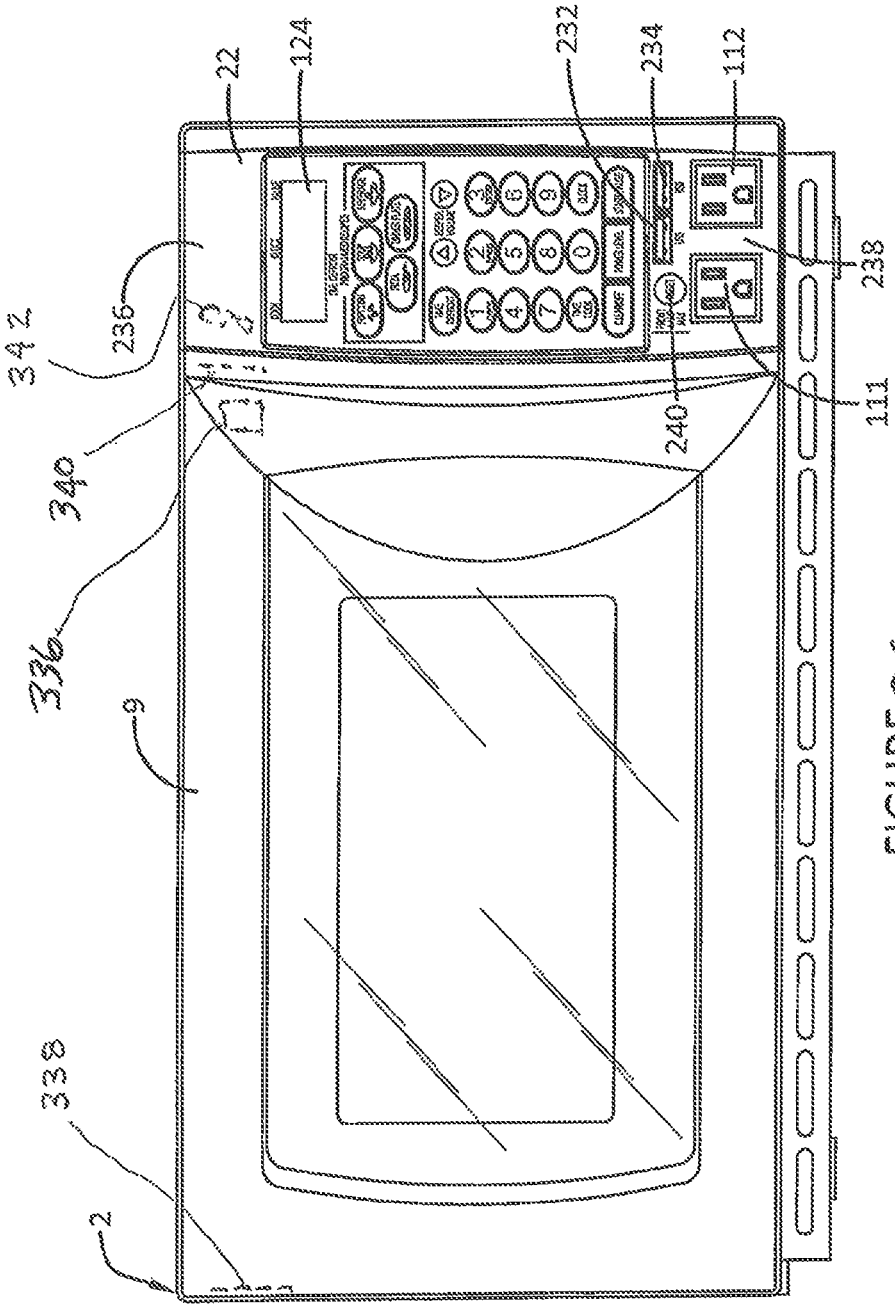


FIGURE 26

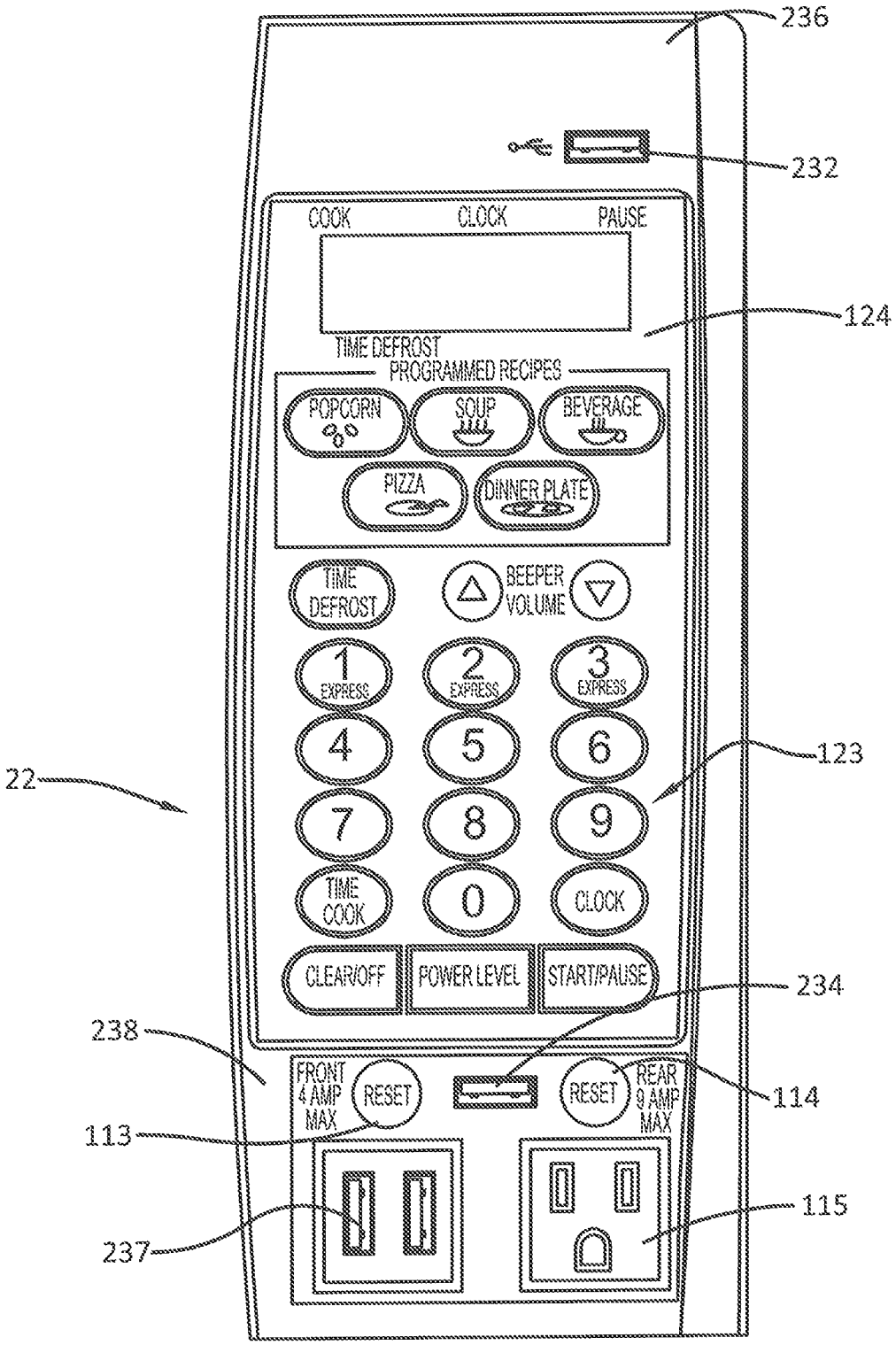
236
232
COOK
CLOCK
PAUSE
124
TIME DEFROST
PROGRAMMED RECIPES
POPCORN
SOUP
BEVERAGE
PIZZA
DINNER PLATE
TIME DEFROST
BEEPER VOLUME
1 EXPRESS
2 EXPRESS
3 EXPRESS
4
5
6
123
22
7
8
9
TIME COOK
0
CLOCK
CLEAR/OFF
POWER LEVEL
START/PAUSE
234
238
FRONT 4 AMP MAX
RESET
RESET
REAR 9 AMP MAX
114
113
115
237

FIGURE 27

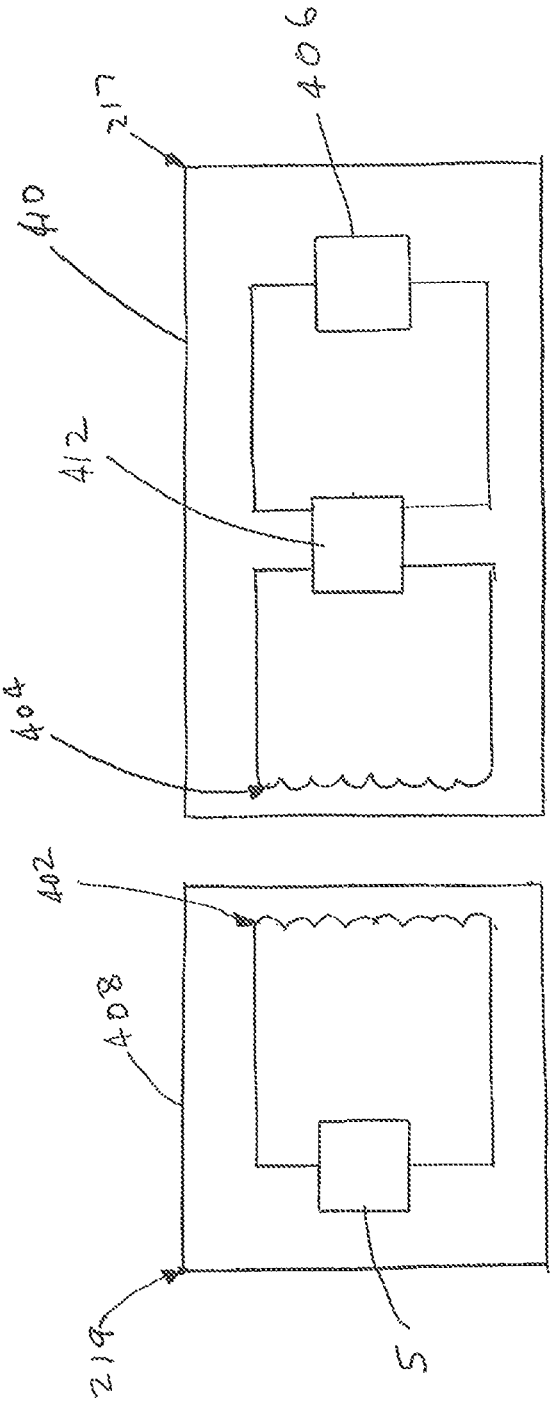


FIGURE 28

# MULTIPLE LINKED APPLIANCE WITH AUXILIARY OUTLET

## TECHNICAL FIELD

Exemplary embodiments relate to improvements to appliances. Specifically, exemplary embodiments relate to improvements to appliances that include compact refrigerator and microwave oven functionality.

## BACKGROUND

Compact refrigerators are used for many different purposes. They are often found in dormitories, hotels, offices and other establishments. Compact refrigerators are also often used in housing units for storage of beverages in bar areas or entertainment areas. Compact refrigerators provide useful storage for refrigerated items without the requirement for the considerable floor space and power draw that is required for a full size refrigerator.

Compact refrigerators and associated appliances may benefit from improvements.

## SUMMARY

In one exemplary arrangement, an appliance apparatus is provided that includes a microwave oven. The microwave oven includes a radiation emitting microwave element and a microwave housing. The microwave housing bounds a cooking interior area. The radiation emitting microwave element is operative to irradiate the cooking interior area. The apparatus also includes a refrigerator. The refrigerator includes refrigerator housing. The refrigerator housing bounds a cooled refrigerator interior area. The refrigerator housing is in fixed operative mechanical connection with the microwave housing. The refrigerator includes a refrigerant compressor, or other refrigeration technology. The refrigerant compressor is operative to compress a refrigerant material. The refrigerant material is operative to cause cooling of the cooled refrigerator interior area. The apparatus includes at least one power control circuit. The at least one power control circuit is operative to cause electrical power to be selectively delivered to the microwave element and the compressor. One of the microwave element and compressor does not operate when the other of the microwave element and the compressor operates. A charging pad is provided on the microwave oven. The charging pad is configured for receiving an item to be charged by the charging pad. The microwave oven further includes at least one smoke sensor. In exemplary arrangements different types of smoke sensors may be used. An exemplary sensor includes a sensor emitter and at least one sensor receiver configured to receive radiation from the at least one smoke sensor emitter, wherein air of at least a portion of the cooking interior area extends intermediate of the at least one sensor emitter and the at least one sensor receiver. The apparatus also includes at least one safety circuit. The at least one safety circuit is in operative connection with the at least one sensor emitter, the at least one sensor receiver, and the microwave element. The at least one safety circuit is operative to cause the at least one sensor emitter to emit sensor radiation and the at least one sensor receiver to sense sensor radiation from the at least one sensor emitter while the microwave element operates during a cooking session. A determination is made that a transmission amount of sensor radiation from the at least one sensor emitter that reaches the at least one sensor receiver has fallen by at least a threshold amount during the cooking session, due to smoke in the cooking interior area. Responsive at least in part to the determination, the microwave element is no longer supplied with electrical power.

Other features may be included in exemplary arrangements.



## BRIEF DESCRIPTION OF THE DRAWINGS

The system of the application is explained in more detail below with reference to the accompanying drawings, in which:

FIG. **1** is a front perspective view of an exemplary arrangement of an appliance system.

FIG. **2** is a rear perspective view of the arrangement of FIG. **1** showing an alternative arrangement.

FIG. **3** is a schematic block diagram of an arrangement of the exemplary system.

FIG. **4** is an electrical schematic diagram corresponding to the arrangement of FIG. **3**.

FIG. **5** is a schematic logic flow diagram of an exemplary arrangement.

FIG. **6** is a schematic logic flow diagram of another exemplary arrangement.

FIG. **7** is a schematic logic flow diagram of another arrangement.

FIG. **8** is a graph illustrating the duty cycles of the components of the appliance in the system of FIG. **3**.

FIG. **9** is a block diagram of an alternate arrangement.

FIG. **10** is an electrical schematic diagram of the arrangement of FIG. **9**.

FIG. **11** is an illustration of a control panel of the arrangement of FIG. **9**.

FIG. **12** is a front view of the microwave oven according to another arrangement.

FIG. **13** is a side view of the microwave oven door of FIG. **12**.

FIG. **14** is a top perspective view of a charging pad on the top portion of a microwave oven.

FIG. **15** is an illustration of a control panel of an alternate arrangement.

FIG. **16** is an electrical schematic diagram of the arrangement of FIG. **15**.

FIG. **17** is a front view of the microwave oven according to another exemplary arrangement.

FIG. **18** is an electrical schematic diagram of the arrangement of FIG. **17**.

FIG. **19** is a front view of the microwave oven according to another exemplary arrangement.

FIG. **20** is an electrical schematic diagram of the arrangement of FIG. **19**.

FIG. **21** is a rear view of the microwave oven according the arrangements of FIGS. **12-19**.

FIG. **22** is a similar view as that of FIG. **21** except that the AC cord is shown.

FIG. **23** is a schematic logic flow diagram of an exemplary arrangement.

FIG. **24** is a front view of the microwave oven according to another exemplary arrangement

FIG. **25** is a front view of the microwave oven according to another arrangement.

FIG. **26** is a front view of the microwave oven according to another exemplary arrangement.

FIG. **27** is an illustration of a control panel of an alternate arrangement.

FIG. **28** is a schematic diagram corresponding to the arrangement of FIG. **14** showing the charging pad and a device being charged.

## DETAILED DESCRIPTION

A multiple linked appliance system **1**, for example, an appliance that comprises a combination microwave oven **2** and refrigerator **3** incorporating features described in the present application illustrated in the Figures. Although exemplary arrangements will be described with reference to the features shown in the drawings, it should be understood that other arrangements may have many alternate forms. In addition, any suitable size, shape or type of elements or materials could be used. The computer or controller devices described in this application may be constructed having one or several processors and one or several program product modules stored in one or several memory elements. For illustration, computer or controller components may be described as individual units by function. It should be understood, that in some instances, these functional components may be separated or combined in other components.

In the exemplary arrangements, the circuits described herein may comprise one or more circuits including processors which for purposes hereof corresponds to any electronic device that is configured via circuit executable instructions that can be implemented in either hardware circuits, software, firmware or applications that are operative to enable the circuits to process data and carry out the other actions described herein. For example, the circuits may include circuits that correspond to one or more or a combination of a CPU, FPGA, ASIC or any other integrated circuit or other type or circuit that is capable of processing data. The processors may be included in a computer, server or other type of electronic device. Further, the circuits described herein may include data stores that correspond to one or more of volatile or non-volatile memories such as random access memory, flash memory, magnetic memory, optical memory, solid state memory or other devices that are operative to store computer executable instructions and data. Computer executable instructions may include instructions in any of a plurality of programming languages and formats including, without limitation, routines, subroutines, programs, threads of execution, objects, methodologies and functions which carry out the actions such as those described herein. Structures for the circuits and processors may include, correspond to and utilize the principles described in the textbook entitled Microprocessor Architecture, Programming, and Applications with the 8085 by Ramesh S. Gaonker (Prentice Hall, 2002), which is incorporated herein by reference in its entirety. Of course it should be understood that these circuit structures are exemplary and in other embodiments, other circuit structures for storing, processing, resolving and outputting information may be used.

In exemplary arrangements the refrigerator may be connected to a power supply that provides a connection that enables the microwave oven to be connected to the same electrical supply. A single plug, therefore, may serve to connect both appliances and the current required for each appliance may be supplied by the same supply power cord and circuit. In exemplary embodiments power may be supplied by the 110V AC current outlet.

To make this combination attractive for use in dorm rooms, hotel rooms, recreational vehicles, tractor trailer cabs, and other similar locations, it may be necessary to assure that the peak current draws of both appliances are not demanded from the supply at the same time. Many household circuits are protected from overload conditions by an automatic circuit breaker that is activated when current in the circuit exceeds the breaker rating. This is 15 amps in many circuits.

The duty cycle of an exemplary refrigerator used in these combined appliance systems includes a current spike that occurs during the first few seconds of operation. This is the start up current for the refrigerator compressor. The current draw is considerably reduced as the compressor attains its full operational speed. In typical refrigerator appliances the peak current may be in the range of 7 to 9 amps, while the steady state current may level off at 1.4 amps or less. A microwave oven demands a relatively steady 8 to 13 amps of cooking power during operation of the cooking element. It is apparent that an overload condition may occur when both appliances are placed in operation absent suitable control circuitry.

In an exemplary arrangement, a combination microwave and refrigerator appliance system is constructed having a single electrical plug input supply. The electrical supply in the exemplary arrangement is directly connected to the microwave oven. The microwave oven is adapted to provide power to the refrigerator through a power supply outlet, and to auxiliary receptacles adapted for connection to devices that operate at a low power operation draw. The microwave oven includes at least one control circuit including a processor based controller adapted to monitor operation of the refrigerator compressor and control the power to the microwave magnetron cooking element and other components. The current draws on the low power receptacles are separately monitored for control by the microwave controller. The microwave controller is adapted to balance the duty cycles of the connected appliances in operative connection therewith to avoid overload conditions. A control logic flow is implemented internally within the circuitry of the microwave controller. A receptacle or other power connecting power supply outlet for the refrigerator and the low power auxiliary receptacle may be implemented as part of the microwave control panel on the microwave oven.

In one arrangement, the auxiliary outlets are constructed to provide low power for the purpose of recharging batteries included in cellular mobile phones, personal media devices and digital cameras, in addition to operating lap top computers and other similar low power devices. The current to the auxiliary outlets is sensed by suitable circuitry in operative connection with the microwave controller.

In another exemplary arrangement, the power to the auxiliary outlets is disabled through operation of the microwave controller when the microwave magnetron is energized or whenever the current to the auxiliary outlets exceeds a preset value.

In one exemplary arrangement, a programmed control model for control logic flow is established and executed by the microwave controller. The model is dependent on the state of operation of the microwave cooking element or elements which are referred to herein as a magnetron. As part of the exemplary control model, the power draw of the compressor is monitored to sense operation of the compressor to compress refrigerant to provide cooling. When cooking power is demanded by the microwave the compressor is disabled by having electrical power thereto withdrawn by the at least one control circuit for a preset minimum period. When power demand to the magnetron ceases, refrigerator compressor power is restored provided that the preset minimum period has expired.

In another exemplary arrangement of the control model, sensing circuits are operative to monitor current draw on the

auxiliary outlets. The control model is adapted to cause the controller to disable the power to the auxiliary receptacles, if the microwave magnetron is in operation. In addition the auxiliary receptacles are disabled if a predetermined maximum current draw is sensed. Another control model is based on operation of the refrigerator and operates to disable the auxiliary receptacles when the compressor is in the start up mode. Of course these approaches are exemplary and in other arrangements, other approaches may be used. Further while in the exemplary arrangement the at least one control circuit which is included in the controller is integrated with the microwave oven, in other arrangements the controller may be integrated with the refrigerator or other device, or may be configured as a separate component.

In one aspect of an exemplary arrangement, a non-transitory processor readable medium having processor executable program instructions embodied therein for operating at least one processor of a control circuit to control an appliance system of multiple linked components including a microwave oven, a refrigerator, and an auxiliary power supply outlet is provided. The processor executable program code causes the control circuit to disable the refrigerator and the auxiliary power supply outlet, when the microwave demands high power such as magnetron cooking power, and enable power delivery from the auxiliary power supply outlet when the microwave is not drawing cooking power.

One exemplary arrangement of a multi-component interconnected appliance system **1** is illustrated in FIG. **1**. This arrangement consists of two components, a refrigerator **3** and a microwave oven **2**. Refrigerator **3** is electrically connected to microwave oven **2** by power cord **7** to refrigerator receptacle **15**, shown at the rear of the microwave **2** in FIG. **2**. Refrigerator **3** is generally subject to control by the microwave microprocessor controller which is alternatively referred to herein as a power control circuit **4** of the microwave oven **2**. The power control circuit may be operative to cause electrical power to be selectively delivered to and/or withheld from the microwave magnetron and the refrigerator compressor. A single power cord **8** provides input electrical power to the system **1** from receptacle **5** which provides a source of electrical power, through microwave **2**. In the case where stand alone components are used, as shown in FIGS. **1** and **2**, microwave oven **2** is connected directly to power source **5**. The refrigerator **3**, as the heaviest component, is used as the base with the microwave oven **2** stacked on top. In the selection of the refrigerator **3**, it would be advantageous in some arrangements for the height of the refrigerator to be no more than 48 inches above the floor. This provides a more ergonomic operation of the microwave oven **2** for the user. In addition, in the stacked position of the components in an exemplary arrangement, the doors **9** and **10** of the microwave **2** and refrigerator **3**, respectively, are arranged in a common plane.

At least one power control circuit **4** serves as a controller for the operation of the microwave oven **2** and is also adapted to control the other components of system **1**, as shown in FIG. **3**. Power is distributed throughout the system **1** under control of microwave controller **4** and digitally operated switches such as relays **19** and **20** represented in FIG. **3**. It should be understood that in some arrangements the relays may control power delivery via mechanical contacts while in other embodiments, solid state relays may be used. Power is distributed to each of the appliance components **2** and **3**, and to auxiliary low power receptacles **11** and **12**. In use lamps **13** and **14** in the form of LEDs or the like may be positioned adjacent to the auxiliary receptacles to indicate power being available from the adjacent receptacle or power to the receptacle being disabled. The low power auxiliary receptacles **11** and **12** are provided to permit convenient access for plugging in a low power device, for example, devices including rechargeable batteries, such as cellular phones, PDAs, or other electronic devices that do not demand high power. As shown in the graph of FIG. **8**, there are instances during which, if more than one of the appliances is in use, the cumulative current would cause an overload condition.

An exemplary control panel **22** of microwave oven **2** may be adapted to provide a display of the particular status of the controlling relays. For example, LEDs **13** and **14** may indicate that power to the outlets **11** and **12** are disabled or available. In one exemplary arrangement the lamps will light when power is available at the outlet and flash when disabled. In another exemplary arrangement the lamps will light when power is not available at the outlet and not activate when power is available at the outlet as a means to reduce the standby power draw. A button operated touch panel is used in the exemplary arrangement to provide manual control.

As shown in FIG. **4**, in order to control the power to the microwave **2**, refrigerator **3** and receptacles **11** and **12**, sensing circuits, may be coupled to the at least one control circuit to monitor current draw by the appliance components and the auxiliary receptacles. A relay **20** is connected in the power line to the refrigerator and may be actuated by signals from controller **4**. In particular, according to an exemplary arrangement, sensing circuits **16**, as shown in FIG. **4**, have sensors **17** and **18** coupled to the power line of the auxiliary outlets **11** and **12** to monitor the current being drawn by a connected device. Sensors **17** and **18** may include current sensing transformers of the type available from Triad Magnetics of Corona, Calif. The signals generated by sensors **17** and **18** may be used to activate switches or other control components, such as relays **19**. Relays **19** may be actuated by the at least one control circuit **4** to enable and disable the delivery of power to the low power auxiliary outlets **11** and **12** in response to signals from sensors **17** and **18**. A maximum current may be set through the program logic associated with the at least one power control circuit **4** to prevent overload of the outlets **11** and **12**. In one arrangement of the system, the maximum current limit is set at 2 amps, and the control circuitry is operated to cease power delivery in situations where the power draw exceeds this amount. Of course this approach is exemplary.

In another exemplary arrangement, a clock function **21** included in the at least one power control circuit **4** is used to provide timed delays during which, for example, refrigerator **3** would be prevented from undesirably rapid on/off cycles. When the compressor of the refrigerator **3** is disabled during microwave cooking operation, a time delay of 3 minutes is provided during which the compressor of the refrigerator **3** will remain disabled, even if microwave use is only for a short period. Control circuit **4** may be programmed to manage the power delivery to the components of the appliance to avoid overload conditions, while minimizing disruptions in the use of an individual appliance component. A model of operative events and related control operations may be designed into the program instructions executed by at least one control circuit **4** to provide a control methodology as illustrated in FIGS. **5-7**.

In one exemplary arrangement, as illustrated in the block diagram of FIG. **3**, at least one control circuit **4**, constructed as part of the controller for microwave **2**, is adapted to receive and process the sensor signals and identify particular events in the system **1** related to a particular appliance

component or combination of appliance component conditions. Circuit **4** controls the power to microwave **2** and refrigerator **3** and also low power receptacles **11** and **12** to avoid overload conditions. The circuit **4** is operative to execute the control methods illustrated and described below. In one exemplary arrangement, the circuit **4** is operative to control operations of microwave oven **2** and is adapted to execute the program instructions described below. The at least one control circuit is coupled directly to refrigerator outlet **15** and low power outlets **11** and **12**.

In one exemplary arrangement, shown in FIG. **1**, the outlets **11**, and **12**, are included as part of the front control panel of microwave oven **2**. In FIG. **2**, in another arrangement, the auxiliary receptacles **11** and **12** and refrigerator receptacle **15** are accessible at the rear of the microwave oven **2**. In these alternative arrangements, the microwave oven **2** is connected by supply cord **8** directly to power supply receptacle **5**. Refrigerator **3** is connected by power cord **7** to receptacle **15** on microwave oven **2** as shown in FIG. **2**.

In one exemplary arrangement, control models for program logic flows are established as shown in FIGS. **5-7** for execution by the at least one control circuit **4**. These models can be in the form of processor executable instructions stored in a computer readable medium, such as software or firmware associated with the circuit **4**. The models shown are, in the first instance, dependent on the state of operation of microwave oven **2**. The current demands of the microwave **2** when drawing cooking power are generally the most significant contribution to overload, as shown in FIG. **8**. To avoid overload conditions, power to the low power receptacles **11** and **12** and refrigerator receptacle **15** is disabled during microwave magnetron operation. If the refrigerator **3** compressor is drawing power when the microwave **2** is turned on to commence cooking, the power to the refrigerator compressor is turned off and clock function **21** is used to determine a predetermined period during which the compressor of refrigerator **3** cannot be restarted. A time delay, for example, of 3 minutes, may be set through programming of the at least one control circuit and when this delay period has expired, receptacle **15** may again be enabled, providing the control circuit determines in accordance with its programming and sensed parameters that microwave cooking operation has ceased. This prevents a too rapid restart of the compressor that may otherwise result in damage.

In some exemplary arrangements, the at least one control circuit of the power controller may operate responsive to sensing the power draw of the refrigerator and the cooking element of the microwave oven so as to detect the power draw reaching a threshold which should not be exceeded to prevent an overload condition. In other exemplary arrangements, the control circuitry may operate to detect inputs that may be provided by input devices and which are operative to cause power drawing components of devices such as the magnetron of the microwave oven or the compressor of the refrigerator to operate. In such arrangements, the control circuitry may operate to detect the signal from a thermostat within the refrigerator which indicates that the thermostat is signaling that the refrigerant compressor should operate to cause the temperature to be lowered within the cooling area of the refrigerator. In such arrangements, the at least one control circuit may operate to detect the signal from the thermostat and prevent the delivery of power to the compressor in situations where the cooking element of the microwave oven is operating. In such arrangements the control circuitry may delay the supply of power to the compressor until the cooking element of the microwave oven has ceased operation. Likewise in an exemplary arrangement the at least one control circuit may be operative to detect inputs to at least one input device of the control panel of the microwave which are provided by a user to commence microwave operation. In response to the detection of such inputs, the exemplary control circuitry may be operative to first cause a determination to be made as to whether the refrigerator is drawing the level of power that indicates that the compressor thereof is operating. In response to a determination that the refrigerator is drawing a level of power that is incompatible with operation of the microwave cooking element, the exemplary control circuitry may be operative to cause power to the refrigerator compressor to be withdrawn. Thereafter the at least one control circuit may be operative to cause power to be supplied to the cooking element of the microwave. Further in exemplary arrangements, the at least one control circuit may also monitor the power draw of auxiliary outlets or other power delivery points to assure that the level of draw that is currently occurring will not be an impediment to an operation that is being requested by an input device of the apparatus before the apparatus begins to operate in a manner that will cause increased power draw. Thus the exemplary appliance apparatus enables the preventative action of discontinuing operation of a power drawing component before instituting operation of another component that draws a high level of power. Of course it should be understood that this approach is exemplary and in other arrangements, other approaches may be used.

In the arrangement shown in FIG. **5**, if low power is demanded at receptacle **11** or **12** and microwave oven **2** is not in use for cooking, power is supplied to the low power receptacles, provided further, that the current demand at an individual outlet does not exceed a preset limit, for example, 2 amps. Since the auxiliary outlets may be enabled during refrigerator compressor operation, there may be an overload generated at peak compressor operation. In one arrangement the at least one control circuit acts to disable the auxiliary outlets during compressor startup to prevent accidental overload of the system. Therefore as illustrated in the logic flow diagram of FIG. **5**, control circuitry may be adapted to check the operational status of the refrigerator, as well as the microwave oven, prior to enabling the auxiliary outlets.

FIGS. **9-11** illustrate another exemplary arrangement. In this arrangement the sensing components **117** and **118** are configured to reduce the risk of overload by the combined demands of the auxiliary outlets **111** and **112** and the refrigerator outlet **115**. In the exemplary configuration as shown in FIG. **10**, current sensor **117** is configured to monitor the current draw through the refrigerator outlet **115** and the circuitry is operative to limit the refrigerator current draw at the outlet **115** so that it does not exceed 10 amps. Current sensor **118** is connected to monitor the combined current in the auxiliary outlets **111** and **112**. Current sensor **118** and the control circuitry is configured to limit the combined auxiliary outlet current draw to 4 amps. In this manner the risk of overload is minimized. As represented in the block diagram of FIG. **9**, the microwave **102** has at least one control circuit comprising controller **104** that is operatively connected to power supply **105**. Clock function **121** which is shown schematically separately but may be part of the controller provides a timing device to determine a restart delay for power to refrigerator **103**. Sensing circuit/sensor **117** is configured to monitor the current demanded by refrigerator **103** and sensing circuit/sensor **118** is connected to low power receptacles **111** and **112** is operative to monitor

the combined current draw on receptacles **111** and **112**. In the exemplary arrangement the control circuitry is shown as operative to control the availability of electrical power to some devices as a whole. For example, if the at least one control circuit operates to cause power not to be available to the refrigerator, all components of the refrigerator, such as the internal lights, air circulation fan, etc., are not supplied with electrical power, in addition to the compressor, which is the component which is most likely to draw power at a level which may be excessive. However in other arrangements, the at least one control circuit may be configured to deliver and withhold power selectively to individual refrigerator components or groups of such components. Thus in such arrangements the power control circuitry may be operative to withdraw power to the high power draw component(s) such as the compressor, while still making power available to other low power draw components such as the internal fan and/or lights.

Likewise in exemplary arrangements, the power control circuitry is operative to selectively allow power to be available or withdrawn from components of the microwave oven. For example, exemplary arrangements control the availability of power to selected components of the microwave oven such as the magnetron and the auxiliary outlets. The at least one power control circuit of exemplary arrangements may operate to maintain electrical operation of certain components, even though electrical power to other components is not available. For example, an exemplary controller may operate to maintain power to the clock display output on the control panel at all times. Further some exemplary arrangements may assure that power is maintained to control circuitry with programmed settings so that programmed data is not lost. This may include for example programmed data concerning a future time to turn on the cooking function, the power level and/or how long to cook. This way if the memory of the microwave has been programmed to begin to cook a food item placed inside the microwave oven at a future time so it is cooked by the time a person returns (for example) the programmed instructions to carry out those instructions will not be lost. Alternatively, configuration data that enables the microwave oven controller to communicate in a wireless network or with other devices will be preserved even though the control circuitry operates to cause electrical power not to be available to certain components. Of course these are merely examples.

It should be understood that for purposes hereof when it is stated that power is withdrawn or not made available to a microwave oven, refrigerator or other assembly of components, the terminology refers to not making such power available to the entire assembly or to only certain selected components that draw high power such as the refrigerant compressor or magnetron. Likewise herein references to the microwave or the refrigerator operating or running refers to operation of the respective high power draw components such as the magnetron or the compressor, for example.

In an exemplary arrangement, as shown in FIG. **11**, a control panel **122** is arranged with at least one input device in the form of a keypad **123** for manual control and a display **124**. Auxiliary outlet **111** is shown as accessible from the front and is associated with a status LED indicator and reset button **113** that may be caused to be operative during use and switch to a flashing mode when the microwave is drawing cooking power. Refrigerator outlet **115** is also accessible on the exemplary front panel and is associated with an LED indicator and reset button **114**. Similarly LED indicator **114** is controlled to be on by being illuminated during use of the refrigerator and to switch to a flashing mode when the microwave is drawing cooking power. In another exemplary arrangement, the status LED indicator and reset button **113** may be caused to be off during use and switched on or to a flashing mode when the microwave magnetron is drawing cooking power. Similarly, in this arrangement, the LED indicator **114** is controlled to be off during operation of the refrigerator compressor and switched on or to a flashing mode when the microwave radiation cooking element is operating.

A further exemplary arrangement of the logic flow operational model is shown in FIG. **6**. In this model, the refrigerator compressor draws or demands power. This may be triggered by a temperature rise of the refrigerator interior area within the housing of the refrigerator and involve start up of the refrigerator compressor with an associated peak power demand. If the microwave cooking element is sensed by the control circuitry as currently drawing cooking power, the programming of the control circuitry causes power not to be available the refrigerator so that operation of the refrigerator compressor will be delayed. If the microwave cooking element was on and subsequently cycled off, the clock function **21** must be checked by the controller to determine if power availability to the refrigerator to restart can occur. Under some circumstances, it may be necessary to give the refrigerator compressor priority to prevent an undesirable rise in temperature. In the latter instance, the at least one control circuit can be coupled to the refrigerator temperature sensor to execute a programmed sequence during which the microwave cooking element will be disabled by not having power supplied thereto to allow the refrigerator to operate long enough to return to proper operating temperatures.

In the exemplary arrangement of FIG. **7**, the exemplary control circuitry operates to give priority to the power demands of the microwave oven, as indicated above. Use of the receptacles **11**, **12**, and **15** are, therefore, caused to be disabled during microwave cooking operation. The operational models which carry out the logic represented in FIGS. **5-7**, may be established by logic flows implemented by instructions that are programmed or imbedded in the control circuitry of controller **4**.

In this manner an appliance system of linked components, including a microwave oven, refrigerator, and at least one low power draw device or appliance may all be connected through a common supply cord to a releasably connectable receptacle providing a source of house current or other electrical power level without the risk of inconvenient interruptions or damage during use caused by overloads.

It is also advantageous to provide such a combination microwave/refrigerator system that also provides auxiliary outlets for low power applications, such as for the purpose of recharging batteries in cellular phones, operating lap top computers and other low power devices, while controlling the operation of the appliance to avoid overload conditions.

In another exemplary arrangement as illustrated in FIGS. **12** and **13**, the auxiliary outlets or electrical power receptacles **211**, **212** may be included as part of the front control panel **222** of the microwave oven **202** and located on the upper portion **270** of the front control panel **222**. The auxiliary outlets **211**, **212**, front control panel **222** and microwave oven **202** are similar to auxiliary outlets **11**, **12**, front control panel **22**, and microwave oven **2** except as discussed below. In this exemplary arrangement, the auxiliary outlets **211**, **212** are positioned side by side with respect to each other with each of the auxiliary outlets **211**, **212** being at the same height as the other. The auxiliary outlet **211** of FIG. **12** may be associated with a status LED indicator and reset button **213**, which is located on the lower

portion **272** of the front control panel and in vertical alignment with the auxiliary outlet **211**. The status LED indicator and reset button **213** may be caused by the control circuitry of the controller to be on during use and switched to a flashing mode to indicate that power is not available therefrom when the microwave oven **202** is drawing cooking power. The auxiliary outlet **212** of FIG. **12** may be associated with status LED and reset button **214**, which is located on the lower portion of the front control panel and in vertical alignment with the auxiliary outlet **212**. The status LED indicator and reset button **214** may be caused by the controller to be on during use and switched to a flashing mode to indicate that power is not available therefrom when the microwave oven **202** is drawing cooking power thereto is withdrawn. In another exemplary arrangement, the status LED indicator and reset button **213** may be caused to be off during the time power is available for use and switched on or to a flashing mode when the microwave oven is running and power thereto is withdrawn. Similarly, in another arrangement, the status LED indicator and reset button **214** may be caused to be off during power availability and switched on or to a flashing mode when the microwave oven is running or the refrigerator is running and the controller causes power not to be available. Other elements and operational features may be similar in structure and function as that of the arrangements shown in FIGS. **1-11**. Thus, the same reference numbers will be used in this exemplary arrangement to indicate elements that are similar in the arrangements shown in FIGS. **1-11**.

Smart technology may be integrated in some of the exemplary arrangements. For example, a user may be able to monitor and/or control the refrigerator **3** such as by turning it on and off remotely by a remote device **217**. The remote device **217** may include a hand held device such as a cellular phone. The cell phone may also be a smart phone. In some exemplary arrangements, the refrigerator, the microwave and/or the controller may include circuitry suitable for communication in a wireless network. Such a wireless network may be established in the facility, residence, office or other location where the combined refrigerator and microwave appliance is operated. Such devices may include circuitry that enables transmission of wireless signals to and from such components. Such communications may include communications of operational properties such as operating status, temperature, programmed values or other information that is pertinent to the operational condition of the particular device. In further exemplary arrangements, circuitry may be operative to enable received wireless messages to modify the operational condition and/or the programming of the particular device.

For example in some exemplary arrangements, the user may be able to communicate from a wireless phone via cellular or WiFi connection to determine that the refrigerator is operating, the temperature therein, the operational status of the compressor or other items. Alternatively and/or in addition, the user may be able to remotely control components of the refrigerator. These may include, for example, the ability to remotely turn on the internal light within the refrigerator and to view the food items currently housed within the refrigerator via one or more electronic cameras positioned therein. This may enable a user, for example, to determine that they need to purchase additional groceries or other items for purposes of an upcoming meal or other activities. Alternatively and/or in addition, in some exemplary arrangements, instructions may be utilized to change the temperature within the refrigerator. This may be done, for example, to chill certain grocery items that may need to be cooled or frozen for certain purposes. Of course these approaches are exemplary.

Likewise the microwave oven may include interface circuitry which enables the remote monitoring of the condition of the microwave oven components via a remote wireless device. This may include, for example, determining the periods of past operation and current status of the microwave oven such as whether it is currently being used to cook items. Alternatively and/or in addition, the remote monitoring capabilities may include determining the programmed status of the controller of the microwave oven such as the controller being programmed to cook an item housed in the microwave oven at a set future time or for a particular duration at a particular power level. Alternatively and/or in addition, the remote operational capabilities associated with the microwave control circuitry may include the ability to turn on an internal light within the cooking chamber of the microwave oven and to view via a camera whether an item is contained therein. Further such remote capabilities may also include the ability to remotely change the program parameters so as to initiate cooking at a different time or at a different power level. Likewise exemplary arrangements may include having the wireless interface in operative connection with the at least one power control circuit to provide the ability to monitor the current status of power draw on auxiliary outlets, the occurrence of alarm conditions, or the current status of other connected devices. It should be understood that such capabilities may be implemented in the controller circuitry or in separate circuitry of the microwave oven and/or the refrigerator. Further the exemplary arrangements may utilize communications interface capabilities included in circuitry of the controller to facilitate monitoring and operational control of the appliance. Of course these capabilities are exemplary and in other arrangements, other approaches may be used.

In an exemplary arrangement a charging pad **219** (FIG. **14**) may be provided on the microwave oven **2** or other suitable location to receive a smart phone or other chargeable device for purposes of charging the device. For example, a wireless charging pad **219** may be positioned on top **225** of the microwave oven **2** for recharging the smart phone or other device. The charging pad **219** may be built into the top **225** of the microwave oven **2** or may be a separate component that is mounted to the top **225** of the microwave oven **2** or other location. The exemplary charging pad **219** includes an inductive charging pad and includes a recessed area **220** for receiving an item to be charged such as the smart phone. The at least one control circuit may include or be in operative connection with a wireless interface **221** configured for communicating with the remote control device **217** for controlling the microwave oven or refrigerator and work in conjunction with the control circuitry to perform functions such as removing the supply of electrical power to the microwave oven **2** and/or refrigerator **3**. In an exemplary arrangement, USB ports **223**, **224** may be provided in the area of the charging pad **219**. Alternatively, or in addition, power outlets may be provided in proximity to the charging pad **219**. Alternatively, the charging pad **219** may be provided on the front, side, rear or bottom of the microwave oven **2**, or at another suitable location in connection with the combined appliance structure.

The exemplary charging pad **219** may utilize inductive or wireless charging, which uses an electromagnetic field to transfer energy between the charging pad **219** and the device being charged. In general, the charging pad **219** may include a primary inductive coil **402** (FIG. **28**) in connection with

circuitry that is operative to create an alternating electromagnetic field that is received by a secondary inductive coil **404** (FIG. **28**) connected to the circuitry of the device being charged such as device **217**. Power from the electromagnetic field is converted back into electric current to charge a battery **406** (FIG. **28**) in the device. FIG. **28** shows an exemplary arrangement in which the charging pad **219** utilizes inductive charging to charge the device **217**. In this arrangement, the charging pad **219** includes an inductive charging station **408** and the primary inductive coil **402**. The power source **5** provides electrical power to the inductive charging station **408** and the other components of the charging pad **219**.

The inductive charging station **408** is provided for inductively charging the device **217** and may be built into or otherwise attached to the charging pad **219**. The inductive charging station **408** may include the primary inductive coil **402** that is connected to the power source **5** for the microwave oven **2**. The recessed area **220** may define a cover of the charging pad **219** that covers the primary inductive coil **402** and provide a surface on which the remote device **217** may be placed for charging. The inductive charging station **408** may also include one or more capacitors coupled in series and/or parallel with the primary inductive coil **402** to form an LC circuit. The inductance value of the primary inductive coil **402** and the capacitance value of the capacitor or capacitors may be selected to achieve a desired resonant frequency which corresponds to a frequency of a coil and circuitry in the device being charged, but it should be noted that this exemplary arrangement is not limited to any particular inductance and/or capacitance values and/or any particular power source ratings.

The device **217** or other device to be charged may include the battery **406** that provides electrical power to the components and circuitry of the device. The battery **406** may comprise a rechargeable battery or batteries including lead acid, nickel cadmium (NiCad), nickel metal hydride (NiMHi), lithium ion (Li-ion) or lithium ion polymer (Li-ion polymer) batteries. The device may include any number of batteries, the size and rating of which may vary. The battery **406** may also comprise power conduits, connectors, receptacles, battery connectors, or power cables coupled with batteries.

The device **217** or other device to be charged may include an inductive charger **410** for charging the battery **406** when the device **217** is placed on or in the vicinity of the inductive charging station **408** of the charging pad **219**. The inductive charger **410** may be built into or otherwise attached to the device to be charged. As schematically represented in FIG. **28**, the inductive charger **410** may include the secondary inductive coil **404** and a charging circuit **412** that is connected to the battery **406**. The inductance value of the secondary inductive coil **404** may be selected to correspond or complement the inductance value of the primary inductive coil **402**, but it should be noted that in exemplary arrangements the secondary inductive coil is not limited to any particular inductance value. Likewise, the power rating of the charging circuit **412** may be selected to match or complement the rating of the battery **406**. The two inductive coils **402**, **404** in proximity combine to operate in a manner similar to the principles employed in an electrical transformer. Further in some arrangements greater distances between primary and secondary inductive coils and/or more effective charging can be achieved when the inductive charging system uses resonant inductive coupling. Of course the described approaches are exemplary and in other arrangements other approaches may be used. In some exemplary arrangements the charging pad may be in operative connection with the at least one control circuit that controls power availability to components of the device. For example, the control circuitry may operate in accordance with its programmed instructions to cause power to not be available to the charging pad when the microwave draws cooking power. Alternatively or in addition the control circuitry may be operative to cause power not to be available to the charging pad responsive to power draw by the refrigerator compressor, the auxiliary outlets or other items, and/or cumulative power draw of multiple items.

As shown in FIGS. **16**, **18**, and **20**, a safety sensor which is alternatively referred to herein as a safety circuit **226** such as a smoke or gas sensor may be provided in connection with the microwave oven **2**. The smoke sensor **226** operates in connection with exemplary at least one control circuit to turn off the microwave oven upon sensing smoke or polluted air indicative of a potentially dangerous condition such as excessive smoke generated from overcooked food. The exemplary safety sensor **226** may be powered on or otherwise operational when the microwave oven is in operation. The sensor circuitry may operate responsive to processor executable instructions to determine the optimal activation point. The exemplary smoke sensor may be battery-powered or powered by the house current that powers the combined appliance with an optional battery backup when the power from the house current is out. The smoke sensor may include an ionization smoke sensor that uses a radioisotope, typically Americium-241, to ionize air. The exemplary ionization smoke sensor circuitry operates to turn off power to the magnetron cooking element of the microwave oven upon sensing a difference due to smoke indicative of a potentially dangerous condition. The smoke sensor alternatively may include a radiation type smoke detector that may contain a source emitter of infrared, visible, or ultraviolet light (typically an incandescent light bulb or light-emitting diode), a lens, and a photoelectric or other type of radiation sensing receiver (typically a photodiode) and suitable control circuitry.

An exemplary sensor **226** may include an alcohol sensor that is coupled with a thermistor **228**. An exemplary alcohol sensor **226** may operate in a set temperature range, such as from 32 to 104 degrees Fahrenheit. When a set level of heating is sensed by the thermistor **228**, the thermistor **228** through suitable control circuitry causes the alcohol sensor **226** to turn on and become operational and check for properties of the gas within the interior area of the microwave.

If the exemplary alcohol sensor **226** is operational due to the sensing of the set level of heating and senses polluted air that is indicative of a dangerous condition, a shutdown signal is outputted by the alcohol sensor to the controller **104**. Upon receiving the shutdown signal, the controller **104** determines that the radiation cooking emitting element of the microwave oven **2** should be shut down and causes the magnetron of the microwave to shut down through the withdrawal of electrical power. If (after the alcohol sensor is caused to be turned on by the thermistor) the alcohol sensor **226** senses air that is not indicative of a dangerous condition such as the air produced by normal cooking of food in the microwave oven **2**, the alcohol sensor circuitry will not send a shutdown signal to the controller **104** and the controller allows the microwave cooking activity to continue.

Alternatively or in addition, a fault indicator **230** may be coupled to the control circuitry of the controller **104** or other circuitry to indicate that there is a dangerous condition upon detection by the alcohol sensor **226**. For example, the fault

indicator **230** may be an audible indicator such as a buzzer that is activated in response to the alcohol sensor **226** sensing polluted air indicative of a dangerous condition. In another example, fault indicator **230** may include the display **124** displaying a fault message such as "E-1" in response to the alcohol sensor **226** detecting polluted air indicative of a dangerous condition. Alternatively the fault indicator may output one or more signals, such as wireless alarm signals that can be detected by a receiver of an alarm system or through a remove device such as a smart phone.

An exemplary arrangement may include a combination of fault indicators. For example, upon the alcohol sensor **226** sensing air that is indicative of a dangerous condition, a shutdown signal is outputted by the alcohol sensor **226** to the controller **104**. Upon receiving the shutdown signal, the controller **104** determines that the microwave oven **2** should be shut down and causes the radiation emitting cooking element of microwave oven **2** to be shut down. In addition in an exemplary arrangement, a buzzer is activated and the display **124** displays a fault message such as "E-1" in response to the alcohol sensor **226** sensing polluted air indicative of a dangerous condition.

The alcohol sensor **226** may be reset automatically responsive to the alcohol sensor **226** no longer detecting gas indicative of the dangerous condition. Alternatively or in addition, the alcohol sensor **226** may be reset upon sensing by a suitable switch, opening of the microwave door **9** of the microwave oven **2**. The display may display a "bar" or other suitable icon to indicate that the alcohol sensor **226** is turned on. Other types of suitable safety sensors may also be used instead of the alcohol sensor to detect a dangerous condition within the cooking area of the microwave.

In addition to one or more sensors which detect the gases generated from cooked food, the sensor **226** may include a temperature sensing capability such as, for example, using the thermistor **228** and related elements mentioned above.

Referring to FIG. **24**, in another exemplary arrangement, the safety sensor which is alternatively referred to as a safety circuit may comprise an infrared sensor **326**. The infrared sensor **326** may include two oppositely positioned infra-red disposed infrared sensor elements in the form of a sensor emitter **328** and sensor receiver **330** (schematically shown in FIG. **24**) provided on the microwave oven and located in the microwave's cavity **332**. The exemplary infrared sensor **326** operates as follows. The sensor emitter **328** emits radiation and the sensor receiver **330** senses sensor radiation from the sensor emitter **328** while the microwave element operates during a cooking session. When smoke that is indicative of a dangerous condition passes in between the infrared sensor elements **328**, **330**, a determination is made by the safety circuit that a transmission amount of sensor radiation from the sensor emitter reaching the sensor receiver has fallen by at least a programmed threshold amount during the cooking session, due to smoke in the cooking interior area. Responsive to the determination, the cooking element of the microwave oven is caused by the safety circuit to be no longer supplied with electrical power. The exemplary safety circuit may use the smoke point of oil or similar food products as the basis for its threshold amount, so that normal smoke emitted during the cooking or heating of food or beverages will not cause the infrared sensor **326** to deactivate cooking operation. The exemplary infrared sensor **326** would not require interaction from the microwave user. The exemplary safety sensor may be operative to cause an initial transmissivity level of sensor radiation that reaches the sensor receiver from the sensor emitter early in the cooking session to be stored in a data store or other memory associated with the safety circuit. The determination of a level of smoke corresponding to a dangerous condition is made in this embodiment responsive to circuitry operating in accordance with programmed instructions to detect that the transmission amount of sensor radiation reaching the sensor receiver has dropped by the threshold amount from the initial transmissivity level during the cooking session.

Referring to FIG. **25**, in another exemplary arrangement, the safety sensor or safety circuit may comprise a light sensor **334**, which detects the increase smoke density within the microwave's cooking area which is alternatively referred to as a cavity. The light sensor **334** may also include a sensor emitter and sensor receiver. The light sensor **334** may be provided in the microwave cavity **332** and may operate as follows. At the beginning of a cooking cycle, the light generated travels through the clean air to the light sensor **334**. As smoke increases in density, the amount of light that reaches the sensor receiver is reduced. The circuitry of light sensor **334** includes a programmed trip point or threshold that corresponds to the reduced amount of light sensed caused by the amount of smoke, that is indicative of a dangerous condition. When the trip point is reached, the safety circuit causes the electrical power to the radiation emitting cooking element to be withdrawn. A circuit determination would be made based on the amount of smoke that corresponds to the trip point and its corresponding light sensor reading.

Referring to FIG. **26**, in another exemplary arrangement, the safety sensor may include an optical motion sensor **336**. The optical motion sensor **336** may also include a sensor emitter and sensor receiver. The optical motion sensor **336** may be positioned in the microwave cavity **332** adjacent air exhaust vents **338**, **340** of the microwave, which comprises an air passage that connects an area where food is cooked in the microwave oven to the air outside the housing of the microwave oven. The optical motion sensor **336** detects motion which is sensed due to the presence of smoke blown by an exhaust fan **342** of the microwave oven **2** through the air passage. The exhaust fan **342** is operative to cause air to move in the air passage connected to the microwave cavity. In an exemplary arrangement, the sensor emitter and sensor receiver are positioned to be operative to sense the transmission of radiation between the emitter and the receiver in the air passage. The optical motion sensor **336** has a trip point or threshold that corresponds to the presence of smoke of a predetermined density that corresponds to a reduced level of transmission that is indicative of a dangerous condition. When the trip point is reached, the optical motion sensor in combination with the control circuitry causes the cooking element of the microwave oven to be turned off. It should be noted that the exemplary optical motion sensor is not be positioned within the microwave cavity and directed toward a turntable therein, since the turntable itself may result in false alarms in some configurations. Of course it should be understood that other types of smoke sensors may be positioned in air passages in other alternative arrangements.

Alternative arrangements may include other types of smoke sensors. For example, some arrangements may include sensors that are operative to detect smoke by determining the level of volatile organic compounds (VOCs) in the air in the microwave oven cooking area. In some exemplary arrangements such VOC sensors may be positioned to sense air in at least a portion of the microwave cooking area. In some cases such VOC sensors may be positioned in an air passage that extends between the microwave cooking area and the air in the atmosphere outside the

microwave. Such an arrangement may have an advantage in that positioning the sensor in the air passage may minimize the amount of cooking splatter and other contamination from the food cooked in the microwave oven that reaches the sensor.

Some exemplary arrangements may include a VOC sensor that comprises a tin dioxide semiconductor gas sensor. In some arrangements the semiconductor is formed on an alumina substrate with a thick film heater of ruthenium oxide on the reverse side. Of course this configuration is exemplary and in other arrangements other configurations and VOC sensor types may be used.

In exemplary microwave oven arrangements VOC sensors may be operated in conjunction with at least one suitable control circuit to detect conditions which correspond to a dangerous smoke condition. Such a dangerous smoke condition is determined responsive to the level of VOCs, such as carbon dioxide and/or carbon monoxide in the air in the cooking area of the microwave oven. Such compounds may generally indicate the presence of combustion which is corresponds to a potentially dangerous condition. Responsive to detecting a threshold VOC concentration in the air of the cooking area, the control circuitry in operative connection with the sensor is operative to cause power to be withdrawn from the magnetron of the microwave oven so as to prematurely end a current cooking session before the set and time thereof. In exemplary arrangements, the sensitivity of the VOC sensors is sufficient to detect a developing potentially dangerous condition and cause power to be withdrawn from the microwave cooking element before a fire or other condition causes damage to the microwave oven. This enables the sensor circuitry to reset when the dangerous smoke condition is no longer detected and enable the microwave oven to operate in a subsequent cooking session.

In some exemplary arrangements multiple sensors in operative connection with detection circuitry is utilized to determine the activation point for an alarm condition based on detection of parameters such as humidity, temperature, temperature rate of change, and gas constituents generated during cooking phases. Combinations of absolute and relative values and rates of change thereof may be detected for purposes of evaluating possible alarm conditions. Other types of sensors that may be used in exemplary arrangements include flame sensors. Flame sensors are operative, detect and provide signals indicative of the presence of a flame or fire. Upon the flame sensor detecting the presence of a flame, the flame sensor causes at least one control circuit to discontinue electrical power to the microwave oven cooking element. In some arrangements the flame sensor may take the form of an optical flame sensor. The flame sensor may be of the type that utilizes ionization current flame detection. Alternatively, the flame sensor may be of the type that utilizes thermocouple flame detection.

Alternatively or in addition, the fault indicator **230** may be coupled to the controller **104** or other circuitry to indicate that there is a dangerous condition upon detection of a potentially dangerous condition by any of the infrared sensor **326**, light sensor **334**, optical motion sensor **336**, or flame or fire sensor in the arrangements described above. For example, the fault indicator **230** may be an audible indicator such as a buzzer that is activated in response to the safety sensor **226** sensing polluted air indicative of a dangerous condition. In another example, fault indicator **230** may include the display **124** displaying a fault message such as "E-1" in response to the safety sensor **226** detecting polluted air indicative of a dangerous condition.

Exemplary arrangements may include a combination of fault indicators. For example, upon the trip point or threshold value being reached by any of the detection circuitry of the infrared sensor **326**, light sensor **334**, or optical motion sensor **336**, a shutdown signal is outputted by the sensor **226** to the controller circuitry **104**. Upon receiving the shutdown signal, the controller **104** determines that the microwave oven **2** should be shut down and causes electricity to be withdrawn from the cooking element. In addition, a buzzer is activated and the display **124** displays a fault message such as "E-1" in response to the sensor **226** sensing polluted air indicative of a dangerous condition. In other exemplary arrangements, the controller or other circuitry may be operative to output signals that can be communicated to a remote location, indicative of an alarm condition that is detected through one or more detection circuits of the microwave oven or other connected devices. This may include, for example, the circuitry dispatching messages to a remote device such as a smart phone of a user. The messages caused to be dispatched responsive to operation of the control circuitry may be indicative of an alarm condition that can be output on the display of the user's device to advise that a potentially dangerous condition exists. Alternatively and/or in addition, the control circuitry may be operative to communicate messages to a central controller or alarm panel located in the facility or institution in which the microwave is operated. For example the circuitry may be operative to provide wireless communication to an alarm panel or central monitoring station which receives the information that there is a potentially dangerous condition at the microwave device located in a particular location, dormitory room or other identified area of the building or facility. In still other exemplary arrangements, messages corresponding to alarm conditions that are cause to be sent by the control circuitry of exemplary arrangements may be dispatched to devices or alarm monitoring stations of a security force for an oversight authority within the area in which the microwave is operated. Of course it should be understood that these approaches are exemplary and in other arrangements, other approaches may be used.

Exemplary arrangements may also include the features described in U.S. patent application Ser. No. 15/239,378 filed Aug. 17, 2016 which is published as US Patent Publications 2017-0059233 the disclosure of which is incorporated herein by reference in its entirety. In some exemplary arrangements an appliance like that shown in the incorporated disclosure may include a safe which is suitable for holding valuables or a user's rechargeable devices such as a smart phone. In some exemplary arrangements the safe may include a smoke sensor, heat sensor, flame sensor or other type sensor that is operative to detect a fire or other dangerous condition within the interior area of the safe. Further in exemplary arrangements the at least one control circuit or other circuitry may be operative to dispatch messages to a user's smart phone or other remote computer device to indicate such a fire or other dangerous condition within the interior area of the safe. In addition in exemplary arrangements the at least one control circuit or safe circuitry as described in the incorporated disclosure, may operate an audible alarm to give at least one audible signal of the dangerous condition. Also in exemplary arrangements messages may be dispatched to alarm monitoring stations associated with the building or institution in which the appliance is located. Further in exemplary arrangements a remote notification to a user's mobile device or other computer and/or to an alarm monitoring station may also be given in circumstances in which at least one tamper sensor of one of

the types of the incorporated disclosure is operative to sense a safe tamper condition. In such circumstances the at least one safe circuit or other circuitry may be operative to cause a remote notification of the tamper condition to be given and/or an audible signal to be output from an audible alarm. Further in exemplary arrangements one or more cameras may be in operative connection with the control circuitry to provide to the user's mobile device or other remote computer and/or to an alarm monitoring station, images associated with the detected condition. These may include images captured by cameras with a field of view outside the safe or the microwave oven or refrigerator of the combined appliance. Alternatively or additionally in other arrangements cameras may be positioned to capture images of an interior area of the safe. In some arrangements this may include a camera that is operative to have a field of view directed at or through the safe opening so that in the event that the safe is opened by an unauthorized person, images of the individual who is responsible for breaking into the safe may be captured. Further in exemplary arrangements the signals may be provided by the safe circuitry which can operate on a battery if the safe is disconnected from the combined appliance and no longer receives power from the at least one power control circuit thereof. Further the safe circuit may also provide GPS or other position signals so that the location of the safe can be tracked. Of course it should be understood that these approaches are exemplary and other arrangements other approaches may be used.

The exemplary detection circuitry of the smoke sensor, infrared sensor **326**, light sensor **334**, or optical motion sensor **336**, may be reset automatically upon the sensor not detecting gas or other conditions that are no longer indicative of the dangerous condition. Alternatively or in addition, the sensor may be reset upon circuitry sensing opening of the microwave door **9** of the microwave oven **2**. The display may display a "bar" or other suitable icon to indicate that the sensor is turned on. Other types of suitable safety sensors and circuitry may also be used to detect dangerous conditions. Further in other exemplary arrangements, other circuitry may be in operative connection with the combined appliance or separate components so as to address dangerous conditions. Such items may include, for example, a suitable fire extinguishing system that may be automatically triggered in response to detecting conditions corresponding to fire or smoke within the cooking chamber of the microwave oven. For example in some exemplary arrangements, a compressed supply of carbon dioxide may be included with or be positioned adjacent to the combined appliance. A suitable gas conduit and control valve may be positioned to deliver the carbon dioxide into the cooking chamber of the microwave oven responsive to the detection of flame, excessive temperature or smoke within the microwave cooking chamber. Suitable circuitry in operative connection with the controller or circuitry of the temperature, smoke or flame detection devices may operate to cause the control valve for the delivery of the carbon dioxide or other fire extinguishing material to be opened to cause the delivery thereof responsive at least in part to the detection of one or more of the alarm conditions. Further as can be appreciated, in some exemplary arrangements, the control circuitry may operate in accordance with its programmed instructions to require that the alarm condition be detected as existing for a programmed period of time before the control circuitry operates to cause the fire extinguishing material to be delivered into the cooking chamber. Further although exemplary arrangements may include carbon dioxide as the fire extinguishing material, in other embodiments other types of fire extinguishing or fire suppressing materials may be utilized. These may include, for example, chemical fire extinguishing or retarding materials in the form of powders or foams. Alternatively, and/or in addition, fire suppressing materials may include the delivery of nonflammable gaseous material. Of course these approaches are exemplary and in other embodiments, other approaches may be used.

As shown in FIGS. **15**, **16** and **27**, the exemplary front control panel **22** of the microwave oven **2** may include Universal Serial Bus (USB) ports **232**, **234** for connection, communication, and power supply between the front control panel **22** and electronic devices such as a personal computer, cell phone, Smart Phone, Ipod®, Ipad®, or other suitable device to allow communication and/or charging of the electronic device plugged into the USB ports. In one exemplary arrangement, a first USB port **232** may be provided on the upper portion **236** of the front control panel **22**, and a second USB port **234** may be provided on the lower portion **238** of the front control panel **22** above the auxiliary outlets **111**, **112** and between the reset buttons **113**, **114** as seen in FIG. **15**. The first USB port **232** may be operatively connected to a three ampere fuse and a linear time-variant system (LVT) of 100 mA, 120 volts, and 12 watts. The second USB port **234** may be operatively connected to a linear time-variant system (LVT) of 200 mA, 120 volts, and 24 watts. The second USB port **234** may also be reset. The current sensor **118** may be constructed to limit the second USB port and the two auxiliary outlets to 12 amps. The USB ports **232**, **234** may be in operative connection with respective printed circuit boards. Alternatively, as represented in FIG. **27**, instead of auxiliary outlet **111**, another USB port **237** may be provided on the front panel **22** at the location of the auxiliary outlet **111**. Alternatively or in addition, one or more USB ports may be provided on the rear of the microwave oven, the sides of the microwave oven, and/or the top or bottom of the microwave oven. Alternatively or in addition, one or more auxiliary outlets may be provided on the rear of the microwave oven, the sides of the microwave oven, and/or the top or bottom of the microwave oven. Alternatively, the refrigerator outlet may be provided on the top, bottom, or one of the sides of the microwave oven.

FIGS. **17** and **18** show another exemplary arrangement of a control panel and control circuitry that includes USB ports **232**, **234**. In this arrangement, the first and second USB ports **232**, **234** are located side by side on the lower portion **238** of the front control panel **22** above the auxiliary outlets **111**, **112**. The USB ports **232**, **234** are also located rightwardly (as viewed in FIG. **17**) adjacent a status LED indicator and reset button **240**. In this exemplary arrangement, current sensor **218** is configured to monitor the combined current in the USB ports **232**, **234** and the auxiliary outlets **111** and **112**. The current sensor **218** is constructed to limit the combined current in the USB ports and auxiliary outlets **111** and **112**, to 12 amperes. The LED indicator and reset button **240** may be controlled to illuminate when power to the auxiliary outlets **111**, **112** and the USB ports **232**, **234** is available and flash when disabled. In another arrangement, the LED indicator and reset button **240** may be controlled to be off when power to the auxiliary outlets **111**, **112** and the USB ports **232**, **234** is available and light on illuminate or flash when disabled. In an exemplary arrangement, depressing the LED indicator and reset button **240** enables power delivery from the auxiliary outlets **111**, **112** and the USB ports **232**, **234** so that power may be again supplied from them after a power interruption due to excessive power draw, when the combined current draw falls from above to below the limit. Of course it should also be understood that in exemplary

arrangements, the controller or other control circuitry that operates to avoid excessive power draw may also operate to discontinue delivery of power from the receptacles and the USB ports in circumstances where the power draw of the microwave cooking element and/or the refrigerator compressor requires the power delivery from the auxiliary outlets and USB ports be discontinued. In such exemplary arrangements, the control circuitry may operate to automatically resume the delivery of power to such receptacles and ports or in other embodiments a manual input may be required to cause the delivery of power to be reinstituted. Of course it should be understood that these approaches are exemplary and in other arrangements other approaches may be used.

FIGS. **19** and **20** show an alternative arrangement in which one USB port **234** is located above the auxiliary outlets **111**, **112** and rightwardly adjacent the status LED indicator and reset button **240**. In this exemplary arrangement, the current sensor **218** is configured to monitor the combined current draw from the USB port **234** and auxiliary outlets **111** and **112**. The current sensor **218** is configured to limit the combined current draw from the USB port **234** and auxiliary outlets **111** and **112**, to 12 amperes. Alternatively, the current sensor **218** may be configured to limit the combined current in the USB port **234** and the auxiliary outlets **111** and **112** to 13 amperes. The LED indicator and reset button **240** may be controlled to illuminate when power to the auxiliary outlets **111**, **112** and the USB port **234** is available, and flash when the control circuitry causes the outlets and ports to be disabled. In another exemplary arrangement, the LED indicator and reset button **240** may be off when power to the auxiliary outlets **111**, **112** and the USB port **234** is available, and illuminate or flash when disabled. In an exemplary arrangement, depressing the LED indicator and reset button **240** enables operation of the auxiliary outlets **111**, **112** and the USB port **234** so that power may be again supplied from them after the controller discontinues the supply of power thereto when the combined current draw falls from above to below the limit. Of course as is the case with the previously described arrangement, the controller and other circuitry may be operative to also discontinue the supply of electrical power to the auxiliary receptacles and/or USB ports when power draw is required for the magnetron of the microwave or the refrigerator compressor is sensed that power delivery to other devices needs to be discontinued to limit excessive power draw. In such circumstances, the discontinuance of power to the auxiliary receptacles and USB ports may be automatically reinstated responsive to operation of the controller. Alternatively, in other arrangements, manual inputs may be required from a user to reinstitute the electrical delivery therefrom. Further in some exemplary arrangements, the controller may be configured so as to require manual inputs to reinstate electrical delivery only under circumstances where excessive power draw above the limits from the one or more auxiliary outlets or USB ports has occurred, thus requiring a manual input to reinstitute the electrical power delivery therefrom. Of course these approaches are exemplary and in other arrangements other approaches may be used. Other elements of the arrangements of FIGS. **17-20** may be similar in structure and function as the arrangements shown in FIGS. **1-11**. Thus, the same reference numbers are used in describing these exemplary arrangements to indicate elements that are similar to elements or components in the arrangements shown in FIGS. **1-11**.

FIG. **21** shows the rear portion **244** of the exemplary microwave oven of the arrangements shown in FIGS. **12-20**. Refrigerator outlet **15** is shown on and accessible from the rear portion **244** of the microwave oven and is associated with the LED indicator and reset button **214**, which is also provided on the rear portion **244** of the microwave oven. FIG. **22** is a similar view as FIG. **21** except that an AC electrical cord **8** for the microwave oven is shown.

In the arrangements shown in FIGS. **12-22**, control models for control logic may be established for execution of executable instructions by the controller or microprocessor which is also referred to herein as at least one electrical power control circuit **4**. These models can be in the form of processor executable instructions stored in a computer readable medium, such as software or firmware within the control circuit **104**. The exemplary models and logic flow are, in the first instance, dependent on the state of operation of the microwave oven **2**. The current demands of the microwave oven **2** are generally the most significant contribution to overload. To avoid overload conditions, in exemplary arrangements power to the low power receptacles or auxiliary outlets, refrigerator receptacle, and/or USB ports is disabled during microwave operation.

FIG. **23** shows a flow chart illustrating several control models for operational scenarios. The at least one power control circuit **104** begins by determining whether the microwave oven is turned on or operating (e.g. cooking) in step **246**. When the microwave oven is turned on and operating to perform cooking, the rear refrigerator outlet **15**, the two auxiliary outlets **111**, **112** on the front control panel **22**, and the two USB ports **232**, **234** on the front control panel are all turned off or disabled, so that the total draw of current for the combination microwave and refrigerator is not over 15 amperes as indicated in step **248**.

When the microwave oven is not drawing cooking power and items are plugged into the two USB ports **232**, **234**, two auxiliary outlets **111**, **112**, and rear refrigerator outlet **15**, then the exemplary at least one control circuit **104** determines whether the refrigerator outlet **15** is drawing less than 2 amperes (approximately the average amperes when the refrigerator compressor is running) in step **250**. If the refrigerator outlet **15** is drawing less than 2 amperes, then all the outlets **15**, **111**, **112** and USB ports **232**, **234** are caused to be enabled, so that power may be supplied through them as indicated in step **252**. If the refrigerator outlet **15** not drawing less than 2 amperes, the at least one control circuit **104** determines whether the refrigerator outlet **15** is drawing less than 14 amperes in step **254**. If the refrigerator outlet **15** is drawing less than 14 amperes but not less than or greater than or equal to 2 amperes, then the auxiliary outlets **111**, **112** and USB ports **232**, **234** are disabled or turned off so that no power may be supplied from them as indicated in step **256**. The refrigerator outlet **15** remains enabled. If the refrigerator outlet **15** is not drawing less than 14 amperes or drawing greater than or equal to 14 amperes, then the refrigerator outlet **15** is disabled in step **258**. This may be accomplished by tripping the relay **20** of the reset circuit off. In addition, the red LED light on the LED indicator and reset button **214** is turned on to identify the disabled condition of the refrigerator. Then, in step **260**, the auxiliary outlets **111**, **112** and USB ports **232**, **234** are enabled so that power may be supplied through them.

Then, the exemplary at least one control circuit determines whether the refrigerator outlet **15** is drawing less than 14 amperes in step **262**. If the refrigerator outlet **15** is not drawing less than 14 amperes or drawing greater than or equal to 14 amperes, then the refrigerator outlet **15** remains disabled and the red LED light on the LED indicator and reset button **214** remains turned on to identify the disabled

condition of the refrigerator **3**. This condition may occur, for example, if an electrical heater is plugged into what is normally used as the refrigerator electrical supply outlet **15**. When the refrigerator outlet **15** draws less than 14 amperes resulting from the overload condition being eliminated, the refrigerator outlet **15** will be enabled by the control circuit so that power may supplied to the refrigerator outlet **15** upon the LED indicator and reset button **214** being depressed as indicated in step **264**. Depression of the LED indicator and reset button **214** in this condition will also turn off the red LED light. The process then ends. It should be noted that the at least one control circuit **104** can make the determination in steps at the same time or in a different order.

It should be understood that in exemplary arrangements, determination as to the power draw from receptacles that have been disabled, may be determined through a process of again supplying power output through the receptacle. The power draw from the receptacle is monitored continuously after the power is restored and if it is detected that the power draw exceeds a threshold or other determined amount, power is discontinued to the receptacle. In some exemplary arrangements, the power sensing circuitry may operate in conjunction with the controller to calculate the current power draw level. The control circuitry may also operate in accordance with its programming to determine that other connected devices are consuming power which may necessitate not providing power to the receptacle so as to avoid an overload condition. Alternatively or in addition, the control circuitry may be operative to monitor other conditions that may be indicative of a problem when the power is restored to a receptacle, port or other control outlet. For example, responsive to a manual input to reinstitute the supply of power thereto, the control circuitry may operate to recognize conditions that correspond to an electrical short or other malfunction which necessitates an immediate withdrawal of electrical power thereto. This may include, for example, monitoring the rate at which power is drawn and the current flow increases to detect a short or other fault condition. Numerous different types of detection circuitry and control approaches may be implemented in order to help assure that if power output has been discontinued, that excessive power draw or undesirable conditions are not a problem when power is reinstated.

Although exemplary arrangements are described herein as used in conjunction with vapor compression refrigerators, embodiments employing the principles described herein may also be used with other types of refrigerators. Such refrigerators may include refrigerators that use thermoelectric cooling, such as Peltier elements to provide cooling. Other arrangements may include absorption refrigerators to provide cooling. In such arrangements the components of the refrigerator apparatus which draw electrical power, are controlled through operation of at least one power control circuit, to prevent, suspend or defer the operation thereof at times when the microwave radiation emitting cooking element of other components that draw electrical power are to be operated, so as to avoid exceeding a maximum threshold for current draw for the combined appliance that is permitted by the at least one control circuit.

It should be understood that the above description is only illustrative of the exemplary arrangements. Various alternatives and modifications can be devised by those skilled in the art without departing from the teachings of exemplary arrangements. Accordingly, the present application is intended to embrace all such alternatives, modifications and variances which fall with the scope of the appended claims.

Thus the exemplary systems, arrangements, and methods of operation that have been described herein achieve desirable capabilities, eliminate difficulties encountered in the use of prior devices and systems and attain the useful results described herein.

In the foregoing description, certain terms have been used in describing exemplary arrangements for purposes of brevity, clarity and understanding. However, no unnecessary limitations are to be implied therefrom because such terms are used for descriptive purposes and are intended to be broadly construed. Moreover, the descriptions and illustrations herein are by way of examples and the inventive features are not limited to the particular features shown and described.

Further it should be understood that elements, features, relationships, devices and other aspects described in connection with one exemplary arrangement may be utilized in connection with other exemplary arrangements such that numerous different arrangements, functions and capabilities may be carried out. Numerous different aspects of described arrangements may be used together or in different combinations to achieve useful results.

Having described the features, discoveries and principles of the exemplary arrangements, the manner in which they are constructed and operated, and the advantages and useful results attained, the new and useful structures, devices, elements, arrangements, parts, combinations, systems, equipment, operations, methods, processes and relationships are set forth in the appended claims.

We claim:

**1**. Apparatus comprising:

an appliance including

a microwave oven,

a refrigerator, wherein the refrigerator is in fixed operative mechanical connection with the microwave oven,

at least one power control circuit, wherein the at least one power control circuit is in operative electrical connection with the microwave oven and the refrigerator,

a single power cord, wherein the single power cord is configured to be releasably connected to a source of electrical power, wherein the at least one power control circuit is supplied with electrical power only through the single power cord,

wherein the microwave oven includes a smoke sensor, wherein the smoke sensor

is positioned in operative connection with a cooking area inside the microwave oven,

is in operative connection with the at least one power control circuit,

wherein responsive at least in part to a level of smoke sensed by the smoke sensor, the at least one power control circuit is operative to cause cooking power to the microwave oven to be withdrawn to end a cooking session prior to a set end time of the current cooking session,

wherein after the end of the current cooking session prior to the set end time based on the sensed level of smoke, the at least one control circuit is operative thereafter to enable the microwave oven to receive cooking power in a next subsequent cooking session,

wherein the at least one power control circuit is operative to

withhold electrical power from at least one component of the refrigerator when the microwave oven draws cooking power, and

deliver electrical power to the refrigerator when the microwave oven does not draw cooking power.

2. The apparatus according to claim 1, and further comprising:

a safe, wherein the safe is in fixed operative mechanical connection with at least one of the refrigerator and the microwave oven.

3. The apparatus according to claim 2

wherein the at least one power control circuit is in operative electrical connection with the safe,

wherein the at least one power control circuit is operative to withhold electrical power from the safe when the microwave oven draws cooking power.

4. The apparatus according to claim 3

wherein the safe includes

a safe body, wherein the safe body bounds a safe interior area, wherein the safe interior area is externally accessible through a safe opening,

a safe door, wherein the safe door is movably mounted in operative supported connection with the safe body, wherein the safe door is movable between a closed position in which the safe door closes the safe opening and an open position in which the safe door is at least partially disposed away from the safe opening,

a lock, wherein the lock is changeable responsive to at least one electrical signal between a locked condition and an unlocked condition, wherein in the closed position of the safe door the lock in the locked condition is operative to prevent the safe door from being moved to the open position,

wherein the microwave oven includes at least one user input device configured to receive manual inputs from users,

wherein the microwave oven is operable to provide cooking power usable to cook items in the cooking area responsive at least in part to inputs through the at least one user input device,

wherein the at least one user input device is in operative connection with the lock,

wherein the lock is enabled to be changed from the locked condition to the unlocked condition responsive at least in part to at least one input to the at least one user input device.

5. The apparatus according to claim 4

wherein the safe further includes

at least one safe circuit, wherein the at least one safe circuit is in operative electrical connection with the at least one power control circuit,

a battery, wherein the battery is in operative connection with the at least one safe circuit,

an audible alarm, wherein the audible alarm is in operative connection with the at least one safe circuit,

at least one tamper sensor, wherein the at least one tamper sensor is operative to sense at least one safe tamper condition,

wherein the at least one safe circuit is operative responsive at least in part to a sensed safe tamper condition sensed by the at least one tamper sensor to cause the audible alarm to output an audible signal.

6. The apparatus according to claim 5

wherein the at least one tamper sensor includes at least one of

at least one conductive material mesh that extends adjacent to at least a portion of the safe interior area, wherein the at least one safe circuit is operative to detect a change in integrity of the material mesh which corresponds to the sensed safe tamper condition, or

at least one conductive trace that extends in at least one of the safe walls or in the safe door, wherein the at least one safe circuit is operative to detect a break in electrical continuity of the at least one conductive trace which corresponds to the sensed safe tamper condition.

7. The apparatus according to claim 6

wherein the at least one tamper sensor includes at least one position sensor, wherein the at least one position sensor is operative to sense relative displacement of at least one of

the safe body relative to at least one of the refrigerator and the microwave oven, or

the safe door relative to the safe body.

8. The apparatus according to claim 7

wherein the at least one safe circuit is configured to cause the alarm to provide the audible signal responsive to the at least one tamper sensor sensing the sensed safe tamper condition using power from the battery when the at least one power control circuit does not supply electrical power to the at least one safe circuit.

9. The apparatus according to claim 8

and further including

at least one bracket, wherein the at least one bracket is in fixed operative mechanical connection with at least two of the microwave oven, the safe and the refrigerator.

10. The apparatus according to claim 9

wherein the safe is in fixed operative mechanical engagement with at least one of the refrigerator, the microwave oven and the at least one bracket through at least one releasable fastener, wherein the at least one releasable fastener is accessible to be released only from within the safe interior area.

11. The apparatus according to claim 9 and further including

a power connector that is usable to charge a battery of a mobile device,

wherein the power connector is in operative connection with the at least one power control circuit,

wherein the power connector is positioned to be connected to the mobile device in the safe interior area.

12. Apparatus comprising:

an appliance including

a microwave oven,

a refrigerator,

a safe,

wherein the microwave oven, the refrigerator and the safe are in fixed operative mechanical connection,

at least one power control circuit, wherein the at least one power control circuit selectively supplies electrical power to at least two of the microwave oven, the refrigerator and the safe.

13. The apparatus according to claim 12

and further including a single power cord, wherein the single power cord is configured to be releasably connected to a source of electrical power, wherein the at least one power control circuit is supplied with electrical power only through the single power cord.

14. The apparatus according to claim 13

wherein the safe includes

a safe body, wherein the safe body bounds a safe interior area, wherein the safe interior area is externally accessible through a safe opening,

a safe door, wherein the safe door is movably mounted in operative supported connection with the safe body, wherein the safe door is movable between a closed position in which the safe door closes the safe

opening and an open position in which the safe door is at least partially disposed away from the safe opening,

a lock, wherein the lock is changeable between a locked condition and an unlocked condition, wherein in the closed position of the safe door and the lock in the locked condition, the lock is operative to prevent the safe door from being moved to the open position.

**15**. The apparatus according to claim **14**

wherein the at least one power control circuit is operative to selectively supply and withhold electrical power from the single power cord to each of the microwave oven, the refrigerator and the safe.

**16**. The apparatus according to claim **15**

wherein the microwave oven includes at least one user input device configured to receive manual inputs from users,

wherein the microwave oven is operable to provide cooking power usable to cook items in a cooking area of the microwave oven responsive at least in part to inputs through the at least one user input device,

wherein the at least one user input device is in operative connection with the lock,

wherein the lock is enabled to be changed from the locked condition to the unlocked condition responsive at least in part to at least one input to the at least one user input device.

**17**. The apparatus according to claim **16**

wherein the safe further includes

at least one safe circuit, wherein the at least one safe circuit is in operative electrical connection with the at least one power control circuit,

a battery, wherein the battery is in operative connection with the at least one safe circuit,

an audible alarm, wherein the audible alarm is in operative connection with the at least one safe circuit,

at least one tamper sensor, wherein the at least one tamper sensor is operative to sense at least one safe tamper condition,

wherein the at least one safe circuit is operative responsive at least in part to a sensed safe tamper condition sensed by the at least one tamper sensor to cause the audible alarm output an audible signal.

**18**. The apparatus according to claim **17**

wherein the at least one safe circuit is configured to cause the alarm to provide the audible signal responsive at least in part to the sensed safe tamper condition by the at least one tamper sensor using power from the battery when the at least one power control circuit does not supply electrical power to the at least one safe circuit.

**19**. The apparatus according to claim **18**

a power connector that is usable to charge a battery of a mobile device,

wherein the power connector is in operative connection with the at least one power control circuit,

wherein the power connector is positioned to be connectable to the mobile device in the safe interior area.

**20**. The apparatus according to claim **19**

wherein the microwave oven includes a smoke sensor,

wherein the smoke sensor is positioned in operative connection with the cooking area inside the microwave oven,

wherein the smoke sensor is in operative connection with the at least one power control circuit,

wherein responsive at least in part to a level of smoke sensed by the smoke sensor, the at least one power control circuit is operative to cause cooking power to the microwave oven to be withdrawn to end a current cooking session prior to a set end time of the current cooking session,

wherein after the end of the current cooking session prior to the set end time due to the sensed level of smoke, the at least one control circuit is operative thereafter to enable the microwave oven to receive cooking power in a next subsequent cooking session,

wherein the at least one power control circuit is operative to

withhold electrical power from the refrigerator when the microwave oven draws cooking power, and

deliver electrical power to the refrigerator when the microwave oven does not draw cooking power.

**21**. Apparatus comprising:

an appliance including

at least one electrical power control circuit,

a microwave oven, wherein the microwave oven is in operative electrical connection with the at least one electrical power control circuit,

wherein the microwave oven includes an interior cooking area,

a smoke sensor, wherein the smoke sensor is positioned in operative connection with the cooking area,

wherein the smoke sensor is in operative connection with the at least one electrical power control circuit and is configured to cause cooking power to be withdrawn from the microwave oven prior to a set end time of a current cooking session responsive at least in part to the smoke sensor sensing an amount of smoke,

wherein the at least one electrical power control circuit is configured such that after ending the current cooking session prior to the set end time due to sensing the amount of smoke, to enable cooking power to again be available to the microwave oven in a next subsequent cooking session,

a refrigerator, wherein the refrigerator is in operative electrical connection with the at least one electrical power control circuit,

wherein the refrigerator includes a plurality of electrically powered refrigerator components,

wherein the at least one electrical power control circuit is operative to cause

electrical power to be unavailable to at least one electrically powered refrigerator component when the microwave oven is operative to draw cooking power, and

electrical power to be available to the at least one electrically powered refrigerator component when the microwave oven does not draw cooking power.

**22**. The apparatus according to claim **21** and further comprising:

a safe, wherein the safe is in fixed operative mechanical connection with at least one of the refrigerator and the microwave oven.

**23**. The apparatus according to claim **22**

wherein the safe includes at least one of

a lock, wherein the lock is electrically changeable between a locked condition and an unlocked condition, and wherein the lock is in operative electrical connection with the at least one electrical power control circuit,

a power connector configured to charge a battery of a mobile device, wherein the power connector is in operative electrical connection with the at least one electrical power control circuit.

**24**. The apparatus according to claim **23**

wherein the safe includes the lock, wherein in the locked condition the lock is operative to hold a safe door of the safe in a closed position,

wherein the microwave oven includes at least one user input device configured to receive manual inputs from users,

wherein the at least one user input device is in operative connection with the lock,

wherein the lock is enabled to be changed from the locked condition to the unlocked condition responsive at least in part to at least one input to the at least one user input device.

**25**. The apparatus according to claim **21**

wherein the microwave oven includes a USB port, wherein the USB port is in operative connection with the at least one electrical power control circuit,

wherein the USB port is not operative to deliver electrical power from the USB port when the microwave oven is operative to draw cooking power.

**26**. The apparatus according claim **21**, wherein the microwave oven further includes at least one output device including at least one of

a USB port,

an inductance charging pad, and

an auxiliary electrical outlet,

wherein the at least one output device is in operative connection with the at least one electrical control circuit, and wherein the at least one electrical control circuit is operative to cause the at least one output device to be inoperative when the microwave oven draws cooking power.

**27**. The apparatus according to claim **21** and further including

a wireless interface, wherein the wireless interface is in operative connection with the at least one electrical power control circuit,

wherein the wireless interface is operative to transmit signals indicative of a condition of at least one of the microwave oven and the refrigerator, to a wireless mobile device.

**28**. The apparatus according to claim **21**, wherein the smoke sensor includes at least one of

a radiation emitter and radiation receiver,

a photosensor,

a motion sensor,

an ionization sensor, and

a VOC sensor.

* * * * *

# EXHIBIT 2

US010495374B1

(12) **United States Patent**
**Hall et al.**

(10) **Patent No.: US 10,495,374 B1**
(45) **Date of Patent: Dec. 3, 2019**

(54) **MULTIPLE LINKED APPLIANCE WITH AUXILIARY OUTLET**

(71) Applicant: **Intirion Corporation**, Walpole, MA (US)

(72) Inventors: **Gregory Allan Thomas Hall**, Guelph (CA); **Philip Emma**, Topsfield, MA (US)

(73) Assignee: **Intirion Corporation**, Walpole, MA (US)

( * ) Notice: Subject to any disclaimer, the term of this patent is extended or adjusted under 35 U.S.C. 154(b) by 335 days.

(21) Appl. No.: **15/600,118**

(22) Filed: **May 19, 2017**

**Related U.S. Application Data**

(63) Continuation of application No. 15/135,883, filed on Apr. 22, 2016, now Pat. No. 9,664,436, which is a continuation-in-part of application No. 14/262,290, filed on Apr. 25, 2014, now Pat. No. 9,657,974, which is a continuation-in-part of application No. 12/317,632, filed on Dec. 23, 2008, now Pat. No. 8,742,304.

(60) Provisional application No. 61/009,419, filed on Dec. 28, 2007.

(51) **Int. Cl.**

| | |
|---|---|
| ***H05B 6/64*** | (2006.01) |
| ***H05B 6/66*** | (2006.01) |
| ***H05B 6/68*** | (2006.01) |
| ***F25D 23/12*** | (2006.01) |

(52) **U.S. Cl.**
CPC ..... ***F25D 23/12*** (2013.01); ***H05B 6/666*** (2013.01); ***H05B 6/68*** (2013.01)

(58) **Field of Classification Search**
CPC ..... H05B 6/645; H05B 6/666; H05B 6/68; H05B 6/806; F25D 23/12; F25B 29/005
USPC ..... 219/482, 483, 485, 488, 678, 679, 695, 219/697, 702, 715, 716, 717, 718, 719, 219/720, 721, 722, 723, 756, 757, 760, 219/761
See application file for complete search history.

(56) **References Cited**

U.S. PATENT DOCUMENTS

4,763,015 A * 8/1988 St. Louis ..... H02J 3/14 307/126
4,847,722 A * 7/1989 Bennett ..... F25D 23/12 219/679

(Continued)

FOREIGN PATENT DOCUMENTS

JP 5-240447 A * 9/1993
JP 2001-33043 A * 2/2001

*Primary Examiner* — Hung D Nguyen
(74) *Attorney, Agent, or Firm* — Ralph E. Jocke; Walker & Jocke

(57) **ABSTRACT**

A combination microwave and refrigerator system is provided. The microwave oven is connected to a source of power and has a control circuit for controlling the operation of the microwave oven. A first power supply outlet is provided on the microwave oven. A refrigerator is connected to the source of power by connection to the first power supply outlet. The control circuit is configured to disable the cooking operation of the refrigerator, when the microwave oven demands cooking power, and enable the cooling operation of the refrigerator when the microwave oven is not drawing cooking power. A safety sensor is provided in the microwave oven, and is configured to cause cooking power to the microwave oven to be turned off upon the safety sensor sensing a dangerous condition.

**20 Claims, 25 Drawing Sheets**

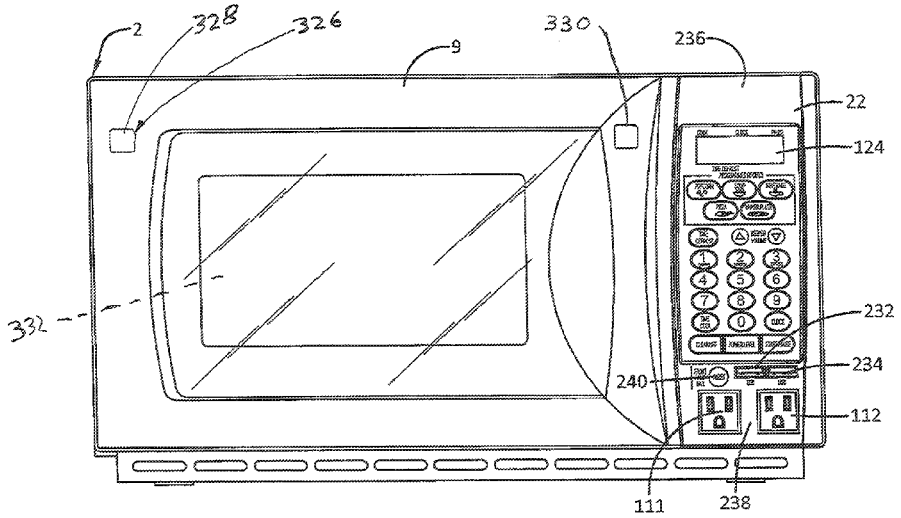

(56) **References Cited**

U.S. PATENT DOCUMENTS

| | | | | | |
|---|---|---|---|---|---|
| 4,880,954 | A * | 11/1989 | Bennett | F25D 23/12 | 219/679 |
| 5,521,359 | A * | 5/1996 | Bone | H05B 6/68 | 219/485 |
| 2003/0106892 | A1* | 6/2003 | Shon | H05B 6/642 | 219/757 |
| 2008/0000650 | A1* | 1/2008 | Choi | A62C 3/006 | 219/679 |

* cited by examiner

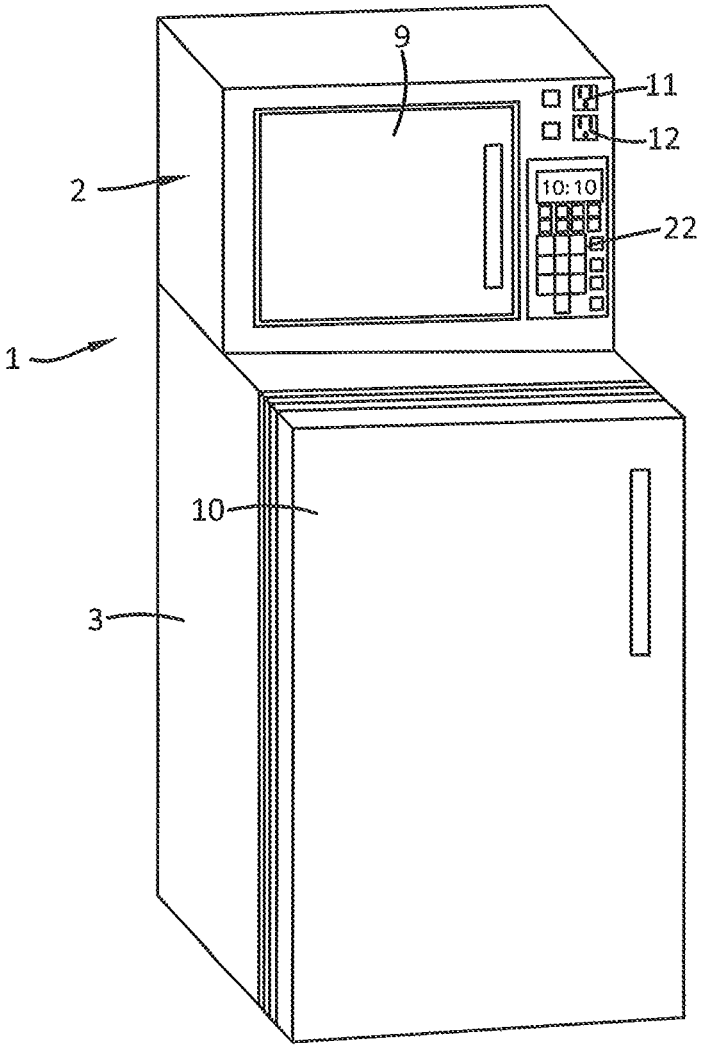


FIGURE 1

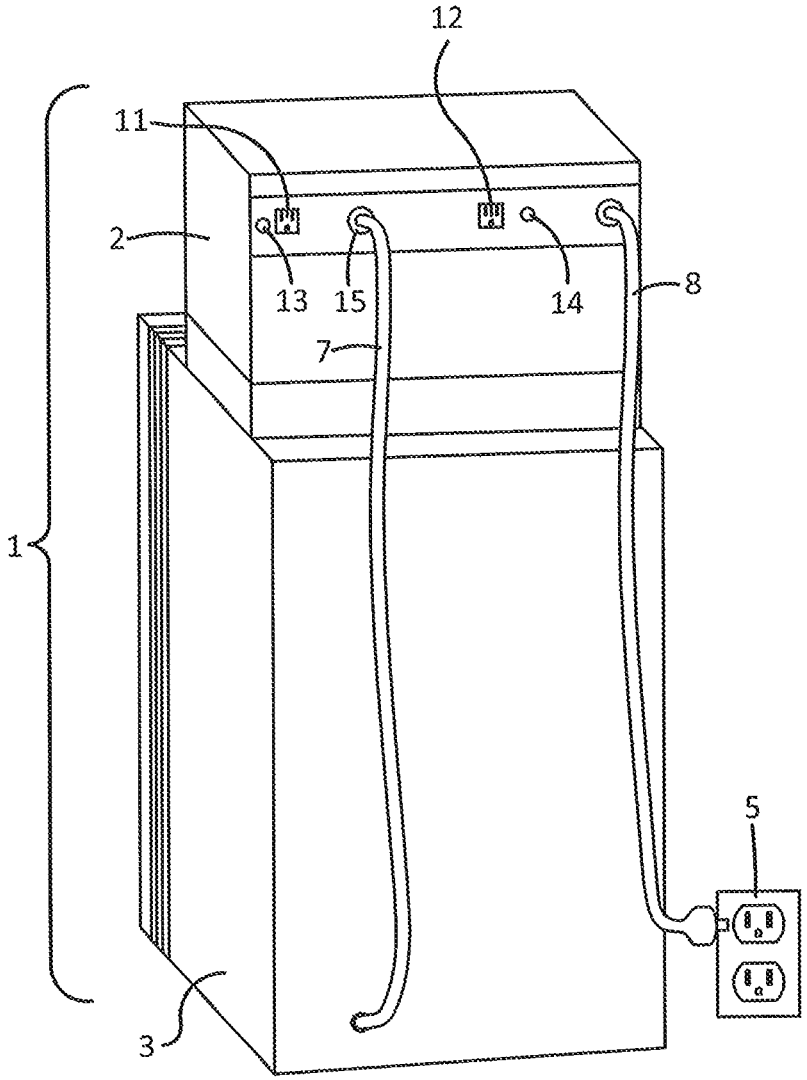


FIGURE 2

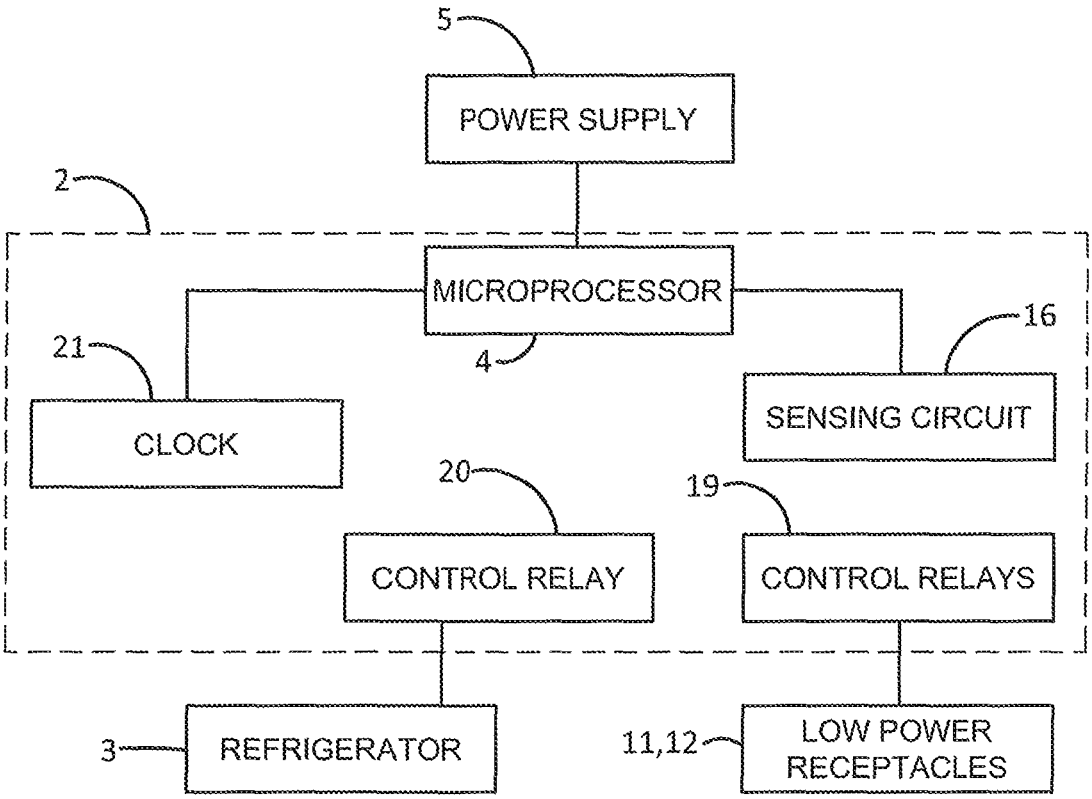
5
POWER SUPPLY
2
MICROPROCESSOR
4
16
21
SENSING CIRCUIT
CLOCK
20
19
CONTROL RELAY
CONTROL RELAYS
3
REFRIGERATOR
11,12
LOW POWER RECEPTACLES

FIGURE 3

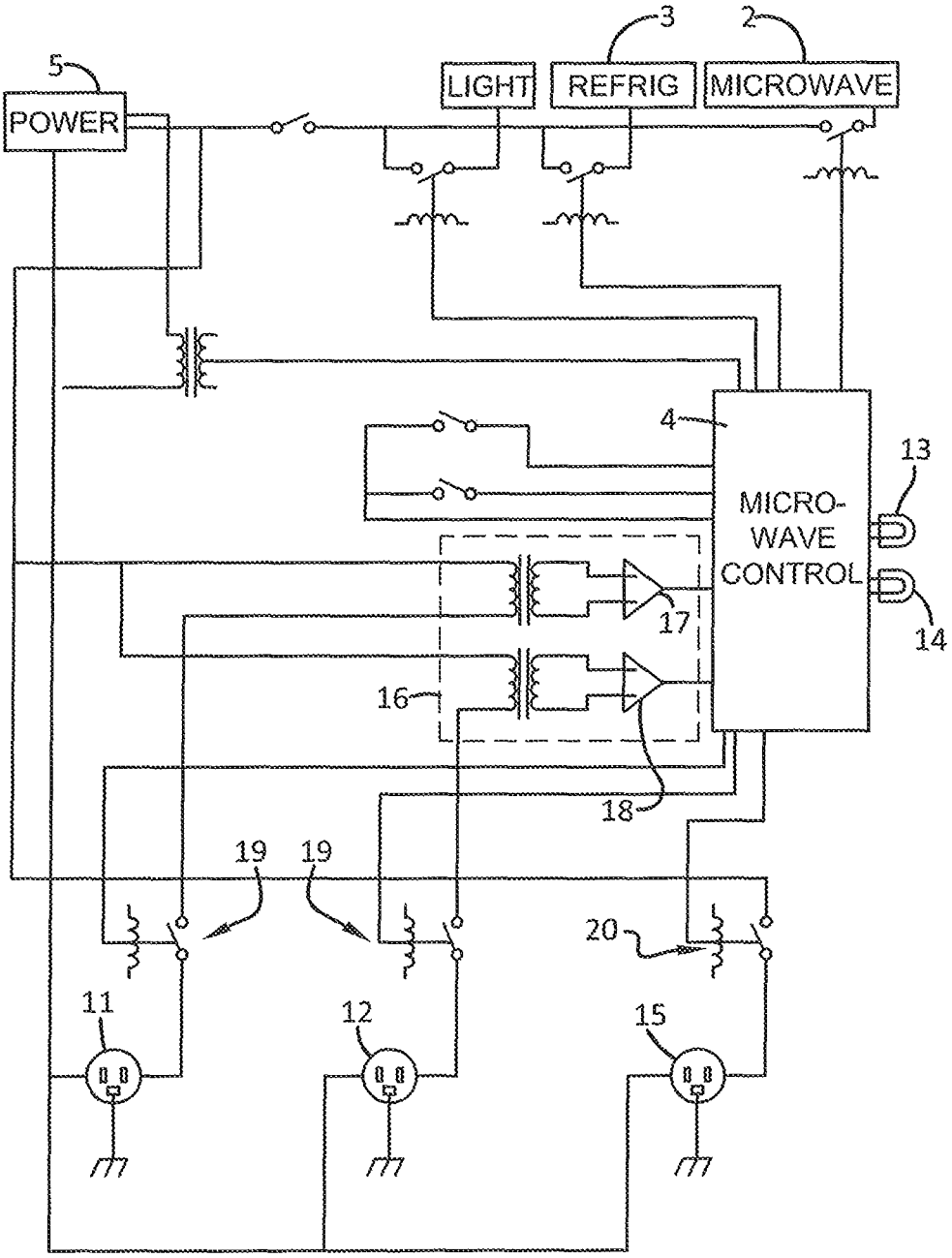
5
POWER
LIGHT
REFRIG
MICROWAVE
3
2
4
MICRO-
WAVE
CONTROL
13
14
17
16
18
19
19
20
11
12
15

FIGURE 4

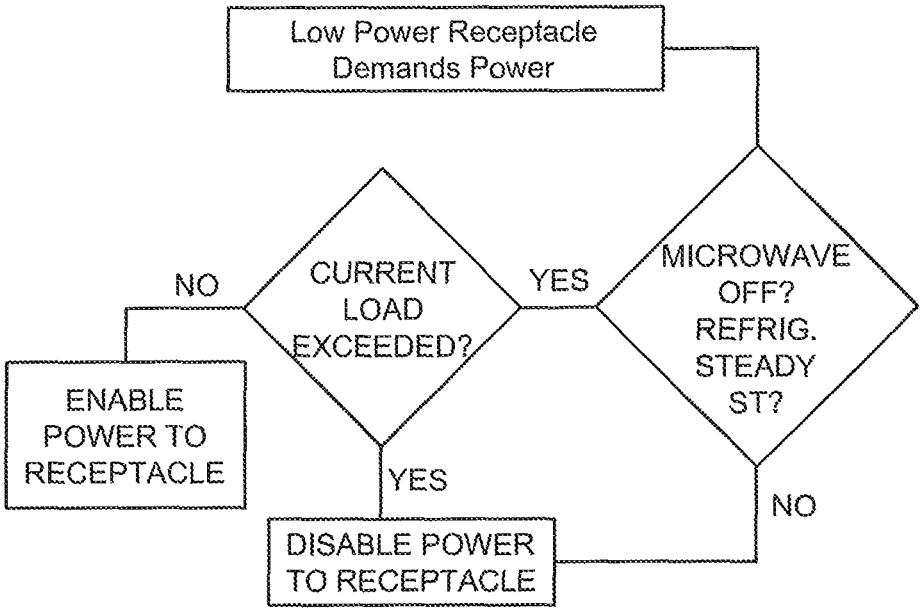


FIGURE 5

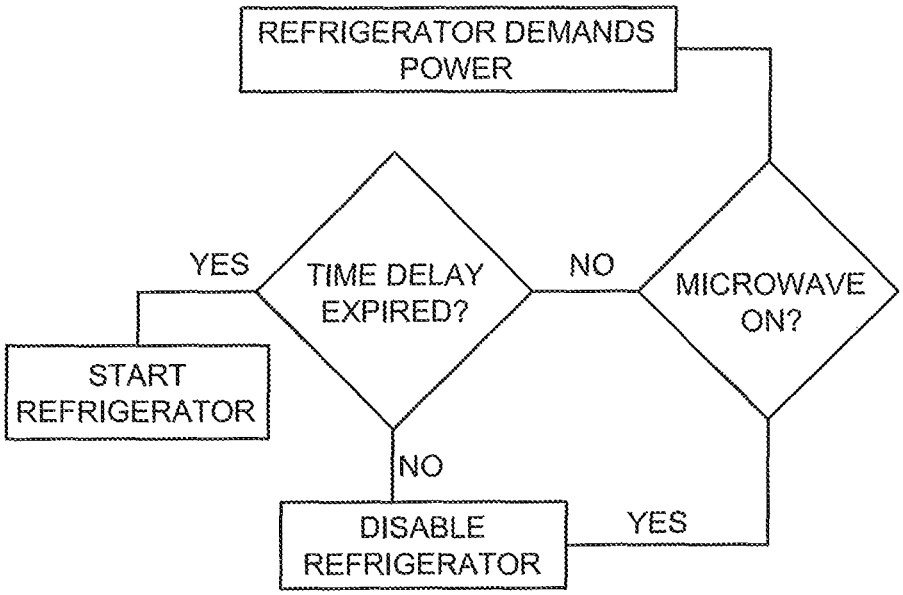


FIGURE 6

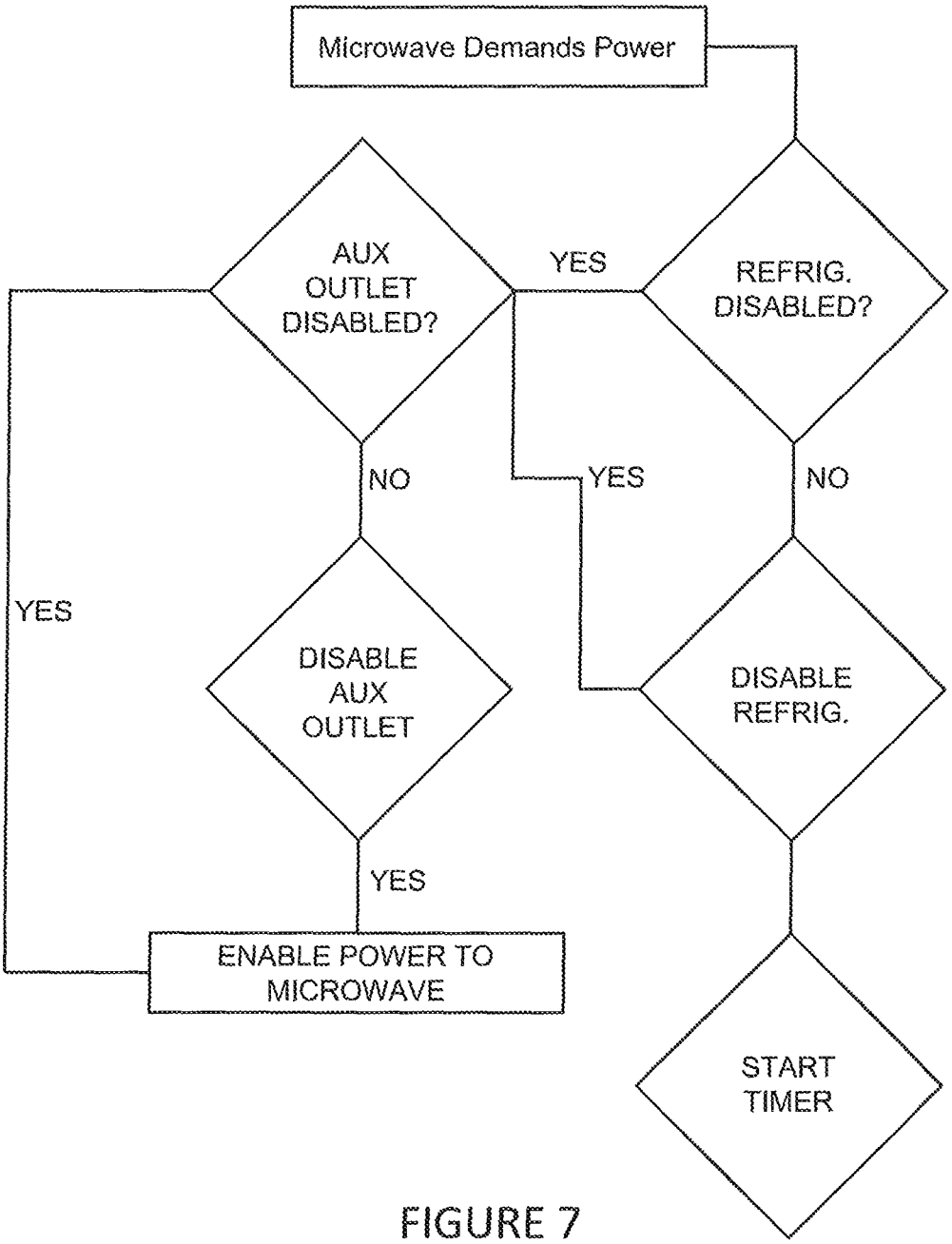
Microwave Demands Power
AUX OUTLET DISABLED?
YES
REFRIG. DISABLED?
NO
YES
NO
YES
DISABLE AUX OUTLET
DISABLE REFRIG.
YES
ENABLE POWER TO MICROWAVE
START TIMER

FIGURE 7

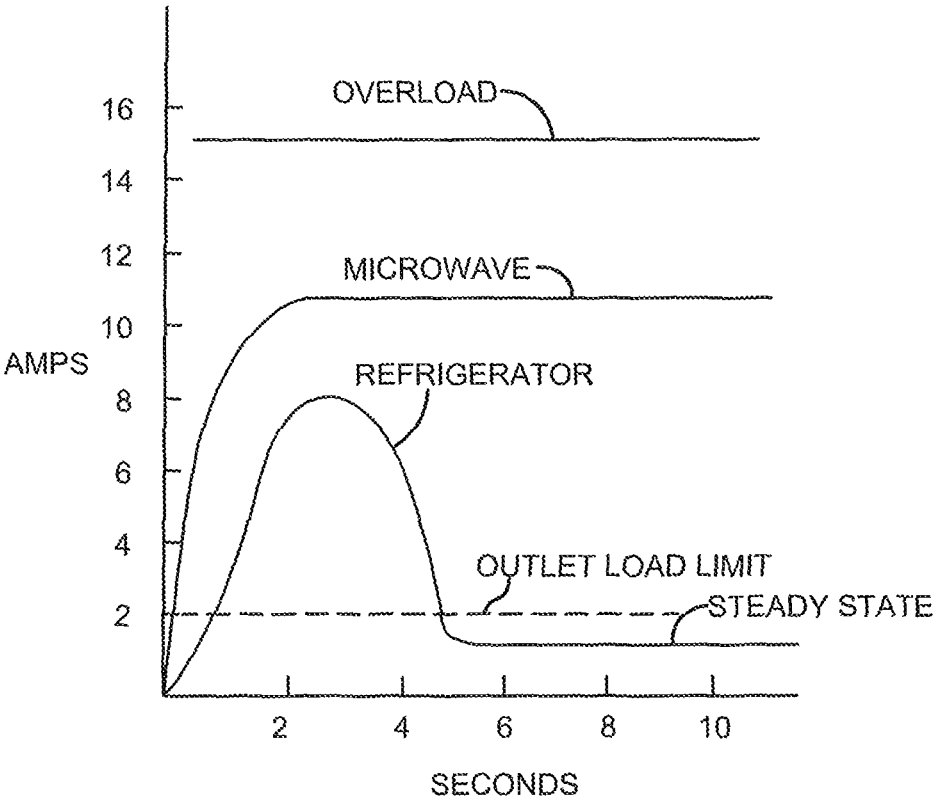
OVERLOAD
MICROWAVE
REFRIGERATOR
OUTLET LOAD LIMIT
STEADY STATE
AMPS
16
14
12
10
8
6
4
2
2
4
6
8
10
SECONDS

FIGURE 8

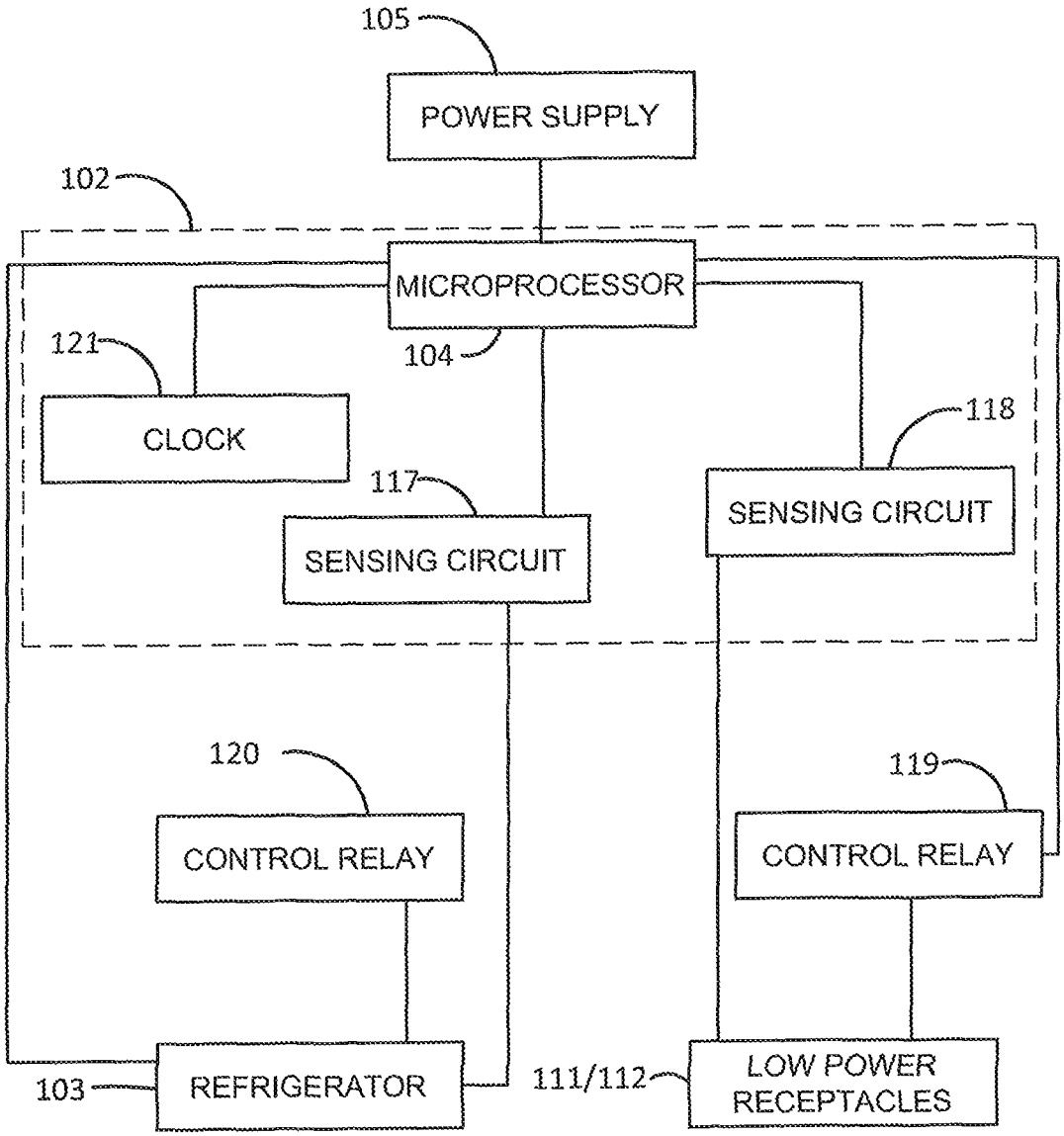
105
POWER SUPPLY
102
MICROPROCESSOR
104
121
CLOCK
118
117
SENSING CIRCUIT
SENSING CIRCUIT
120
119
CONTROL RELAY
CONTROL RELAY
103
REFRIGERATOR
111/112
LOW POWER RECEPTACLES

FIGURE 9

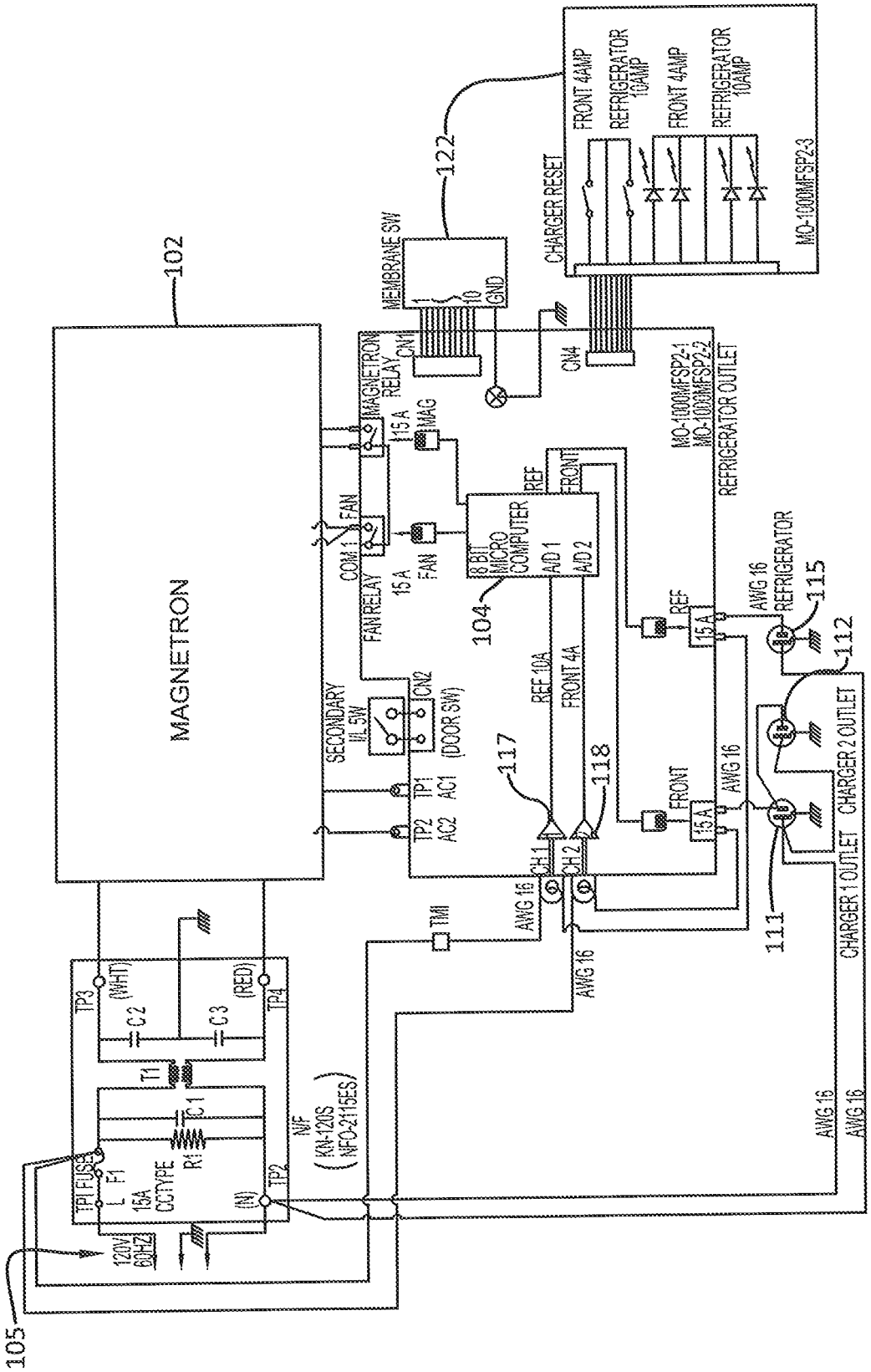
MAGNETRON
102
105
122
104
117
118
111
112
115
MEMBRANE SW
CHARGER RESET
FRONT 4AMP
REFRIGERATOR 10AMP
MO-1000MFSP2-3
MO-1000MFSP2-1
MO-1000MFSP2-2
REFRIGERATOR OUTLET
MAGNETRON RELAY
FAN RELAY
8 BIT MICRO COMPUTER
A/D 1
A/D 2
SECONDARY I/L SW
(DOOR SW)
REF 10A
FRONT 4A
AWG 16
REFRIGERATOR
CHARGER 2 OUTLET
CHARGER 1 OUTLET
TP1 FUSE
15A CCTYPE
120V 60HZ
N/F (KN-120S NFO-2115ES)
TP3 (WHT)
TP4 (RED)
TP2 (N)
TM1

FIGURE 10

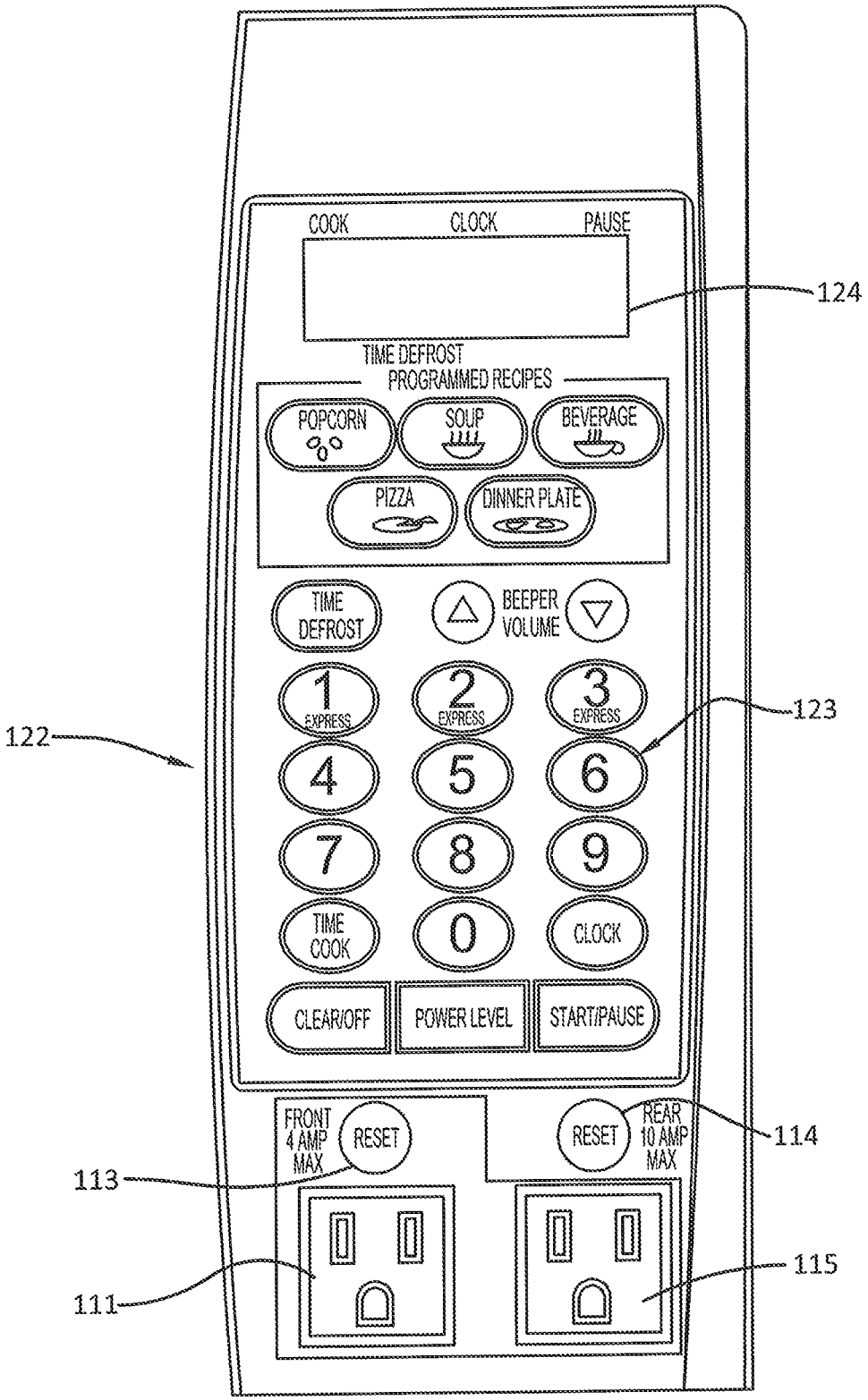
COOK
CLOCK
PAUSE
124
TIME DEFROST
PROGRAMMED RECIPES
POPCORN
SOUP
BEVERAGE
PIZZA
DINNER PLATE
TIME DEFROST
BEEPER VOLUME
1 EXPRESS
2 EXPRESS
3 EXPRESS
123
122
4
5
6
7
8
9
TIME COOK
0
CLOCK
CLEAR/OFF
POWER LEVEL
START/PAUSE
FRONT 4 AMP MAX
RESET
RESET
REAR 10 AMP MAX
114
113
111
115

FIGURE 11

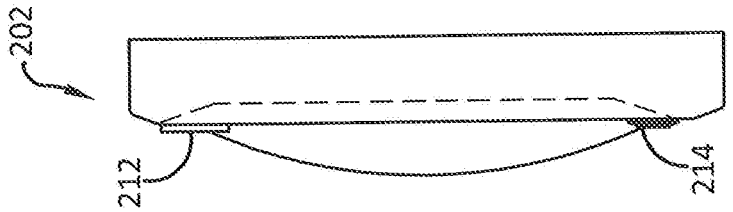


FIGURE 13

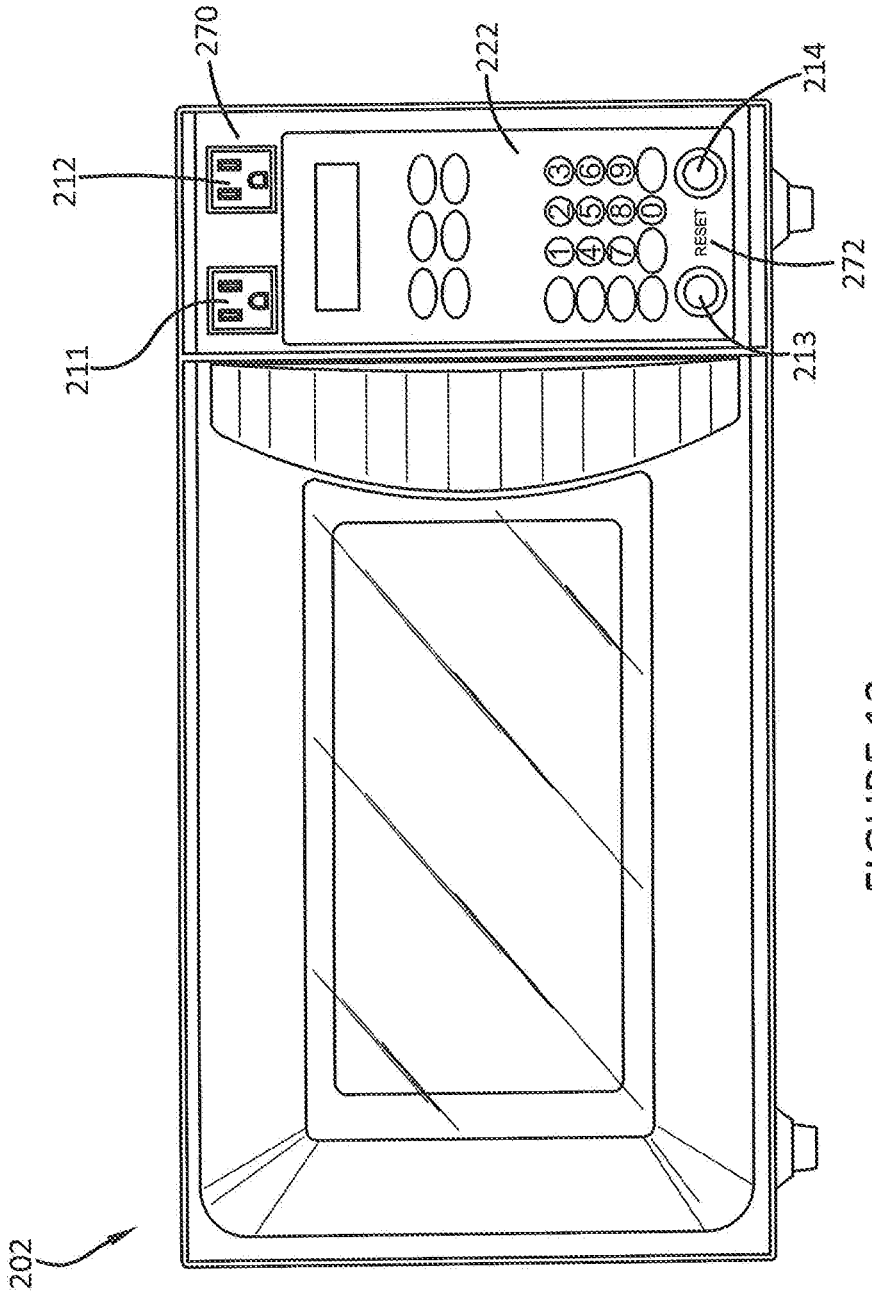


FIGURE 12

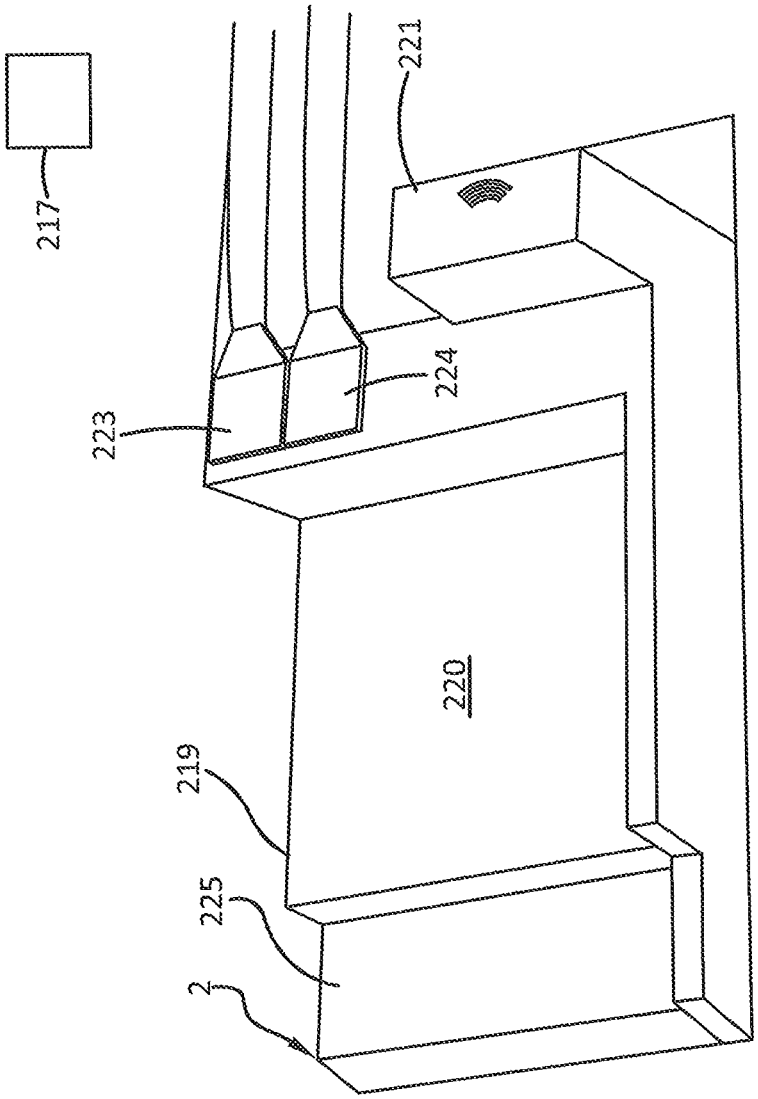


FIGURE 14

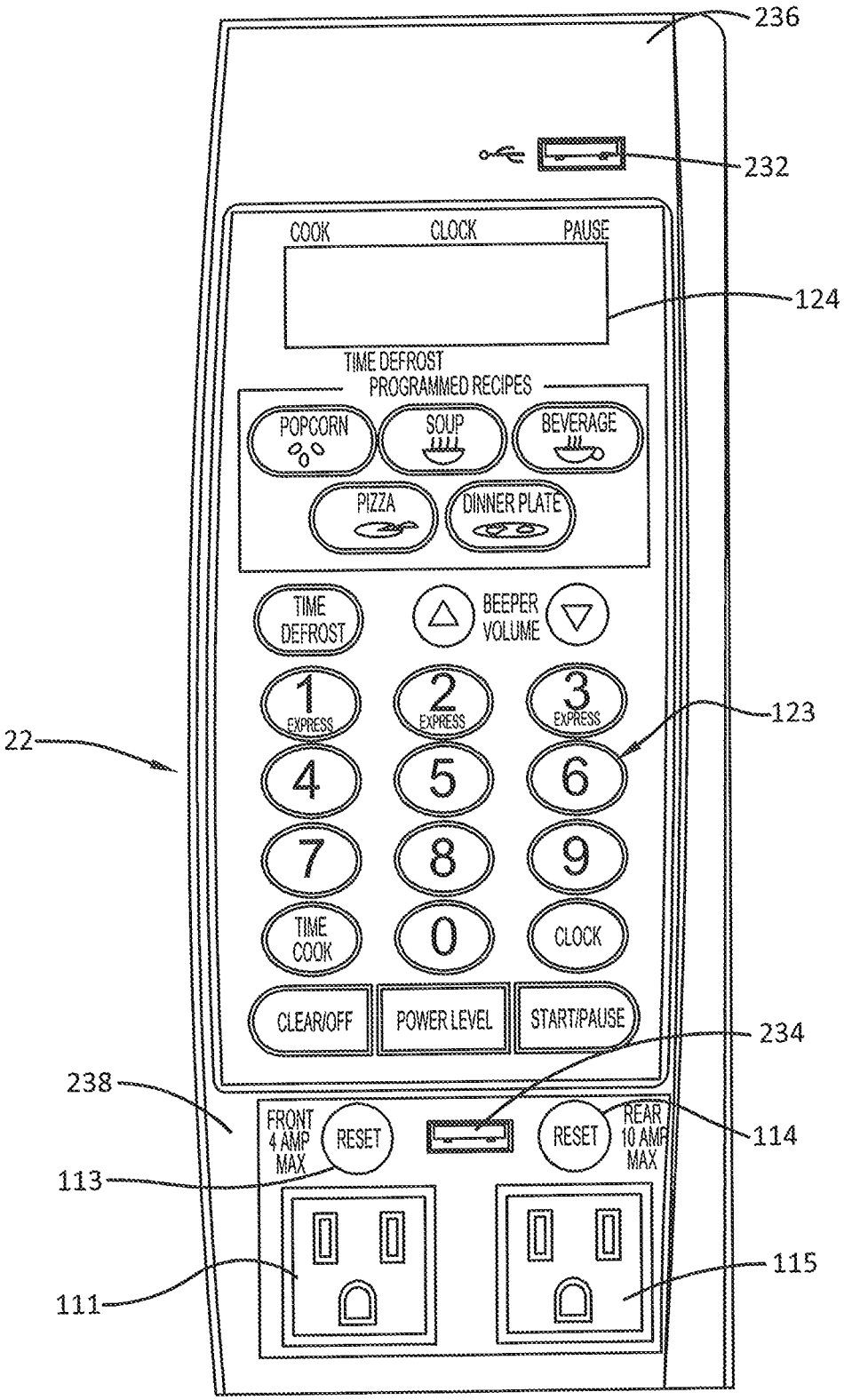
236
232
COOK
CLOCK
PAUSE
124
TIME DEFROST
PROGRAMMED RECIPES
POPCORN
SOUP
BEVERAGE
PIZZA
DINNER PLATE
TIME DEFROST
BEEPER VOLUME
1 EXPRESS
2 EXPRESS
3 EXPRESS
123
22
4
5
6
7
8
9
TIME COOK
0
CLOCK
CLEAR/OFF
POWER LEVEL
START/PAUSE
234
238
FRONT 4 AMP MAX
RESET
RESET
REAR 10 AMP MAX
114
113
115
111

FIGURE 15

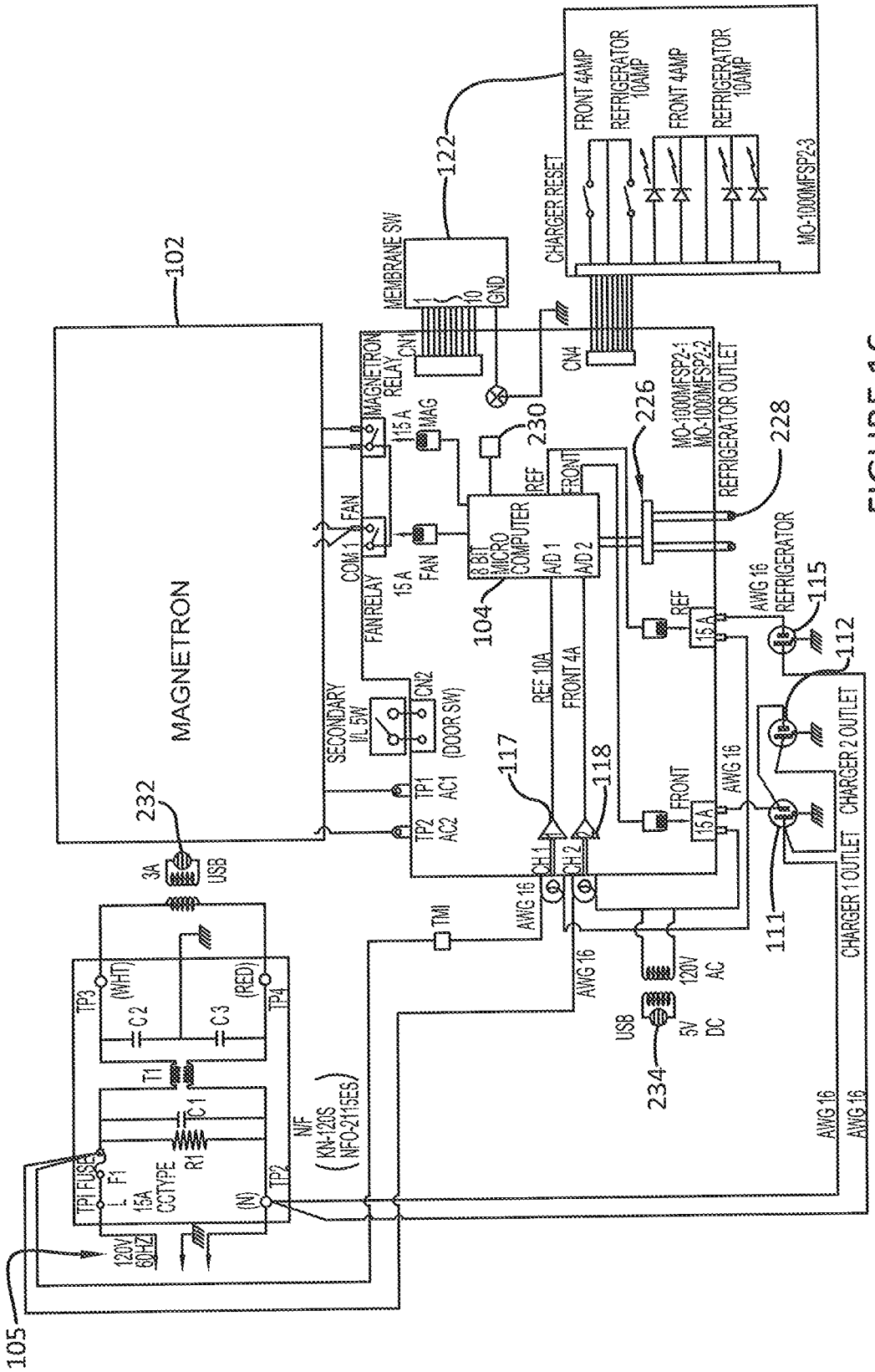
MAGNETRON
102
105
122
104
117
118
230
226
228
232
234
111
112
115
MEMBRANE SW
CHARGER RESET
FRONT 4AMP
REFRIGERATOR 10AMP
MO-1000MFSP2-3
MAGNETRON RELAY
FAN RELAY
SECONDARY I/L SW
(DOOR SW)
8 BIT MICRO COMPUTER
A/D 1
A/D 2
REF
FRONT
REF 10A
FRONT 4A
MO-1000MFSP2-1
MO-1000MFSP2-2
REFRIGERATOR OUTLET
REFRIGERATOR
CHARGER 2 OUTLET
CHARGER 1 OUTLET
AWG 16
120V AC
5V DC
USB
3A
TMI
N/F
(KN-120S
NFO-2115ES)
120V 60HZ
TP1 FUSE
15A CCTYPE
F1
R1
C1
T1
C2
C3
TP1
TP2
TP3
TP4
(WHT)
(RED)
(N)
CH1
CH2
AC1
AC2
COM 1
FAN
MAG
CN1
CN4
GND

FIGURE 16

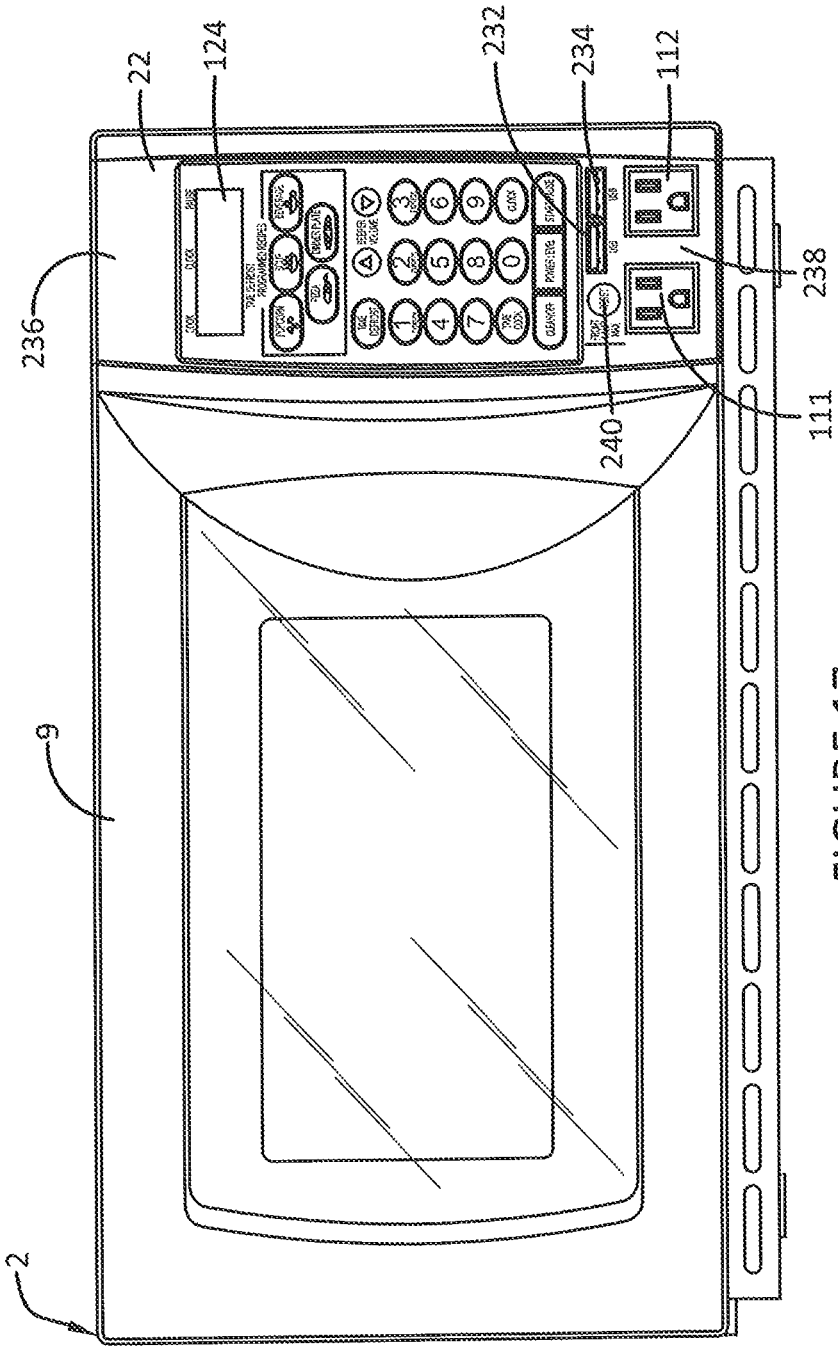


FIGURE 17

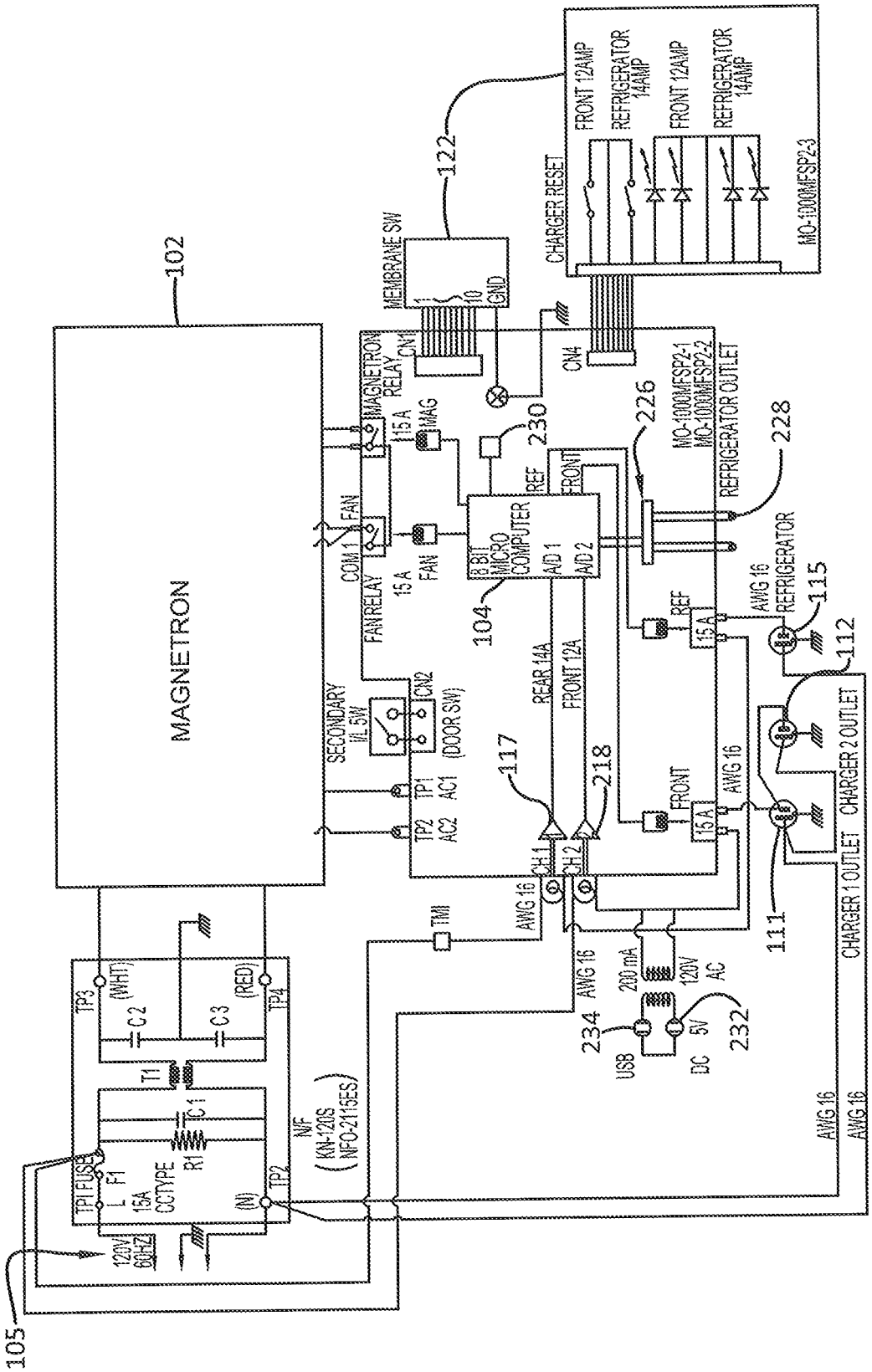
MAGNETRON
102
105
122
MEMBRANE SW
GND
CHARGER RESET
FRONT 12AMP
REFRIGERATOR 14AMP
MO-1000MFSP2-3
MAGNETRON RELAY
CN1
CN4
MAG
15 A
230
226
228
MO-1000MFSP2-1
MO-1000MFSP2-2
REFRIGERATOR OUTLET
FAN
COM 1
FAN RELAY
8 BIT MICRO COMPUTER
A/D 1
A/D 2
REF
FRONT
104
REAR 14A
FRONT 12A
AWG 16
REFRIGERATOR
115
112
SECONDARY I/L SW
CN2
(DOOR SW)
TP1
AC1
TP2
AC2
117
218
CH 1
CH 2
CHARGER 2 OUTLET
CHARGER 1 OUTLET
111
TMI
200 mA
120V AC
234
USB
DC
5V
232
TP3
(WHT)
(RED)
TP4
C 2
C 3
T1
C 1
R1
TP1 FUSE
F1
15A CCTYPE
(N)
TP2
N/F
(KN-120S NFO-2115ES)
120V 60HZ

FIGURE 18

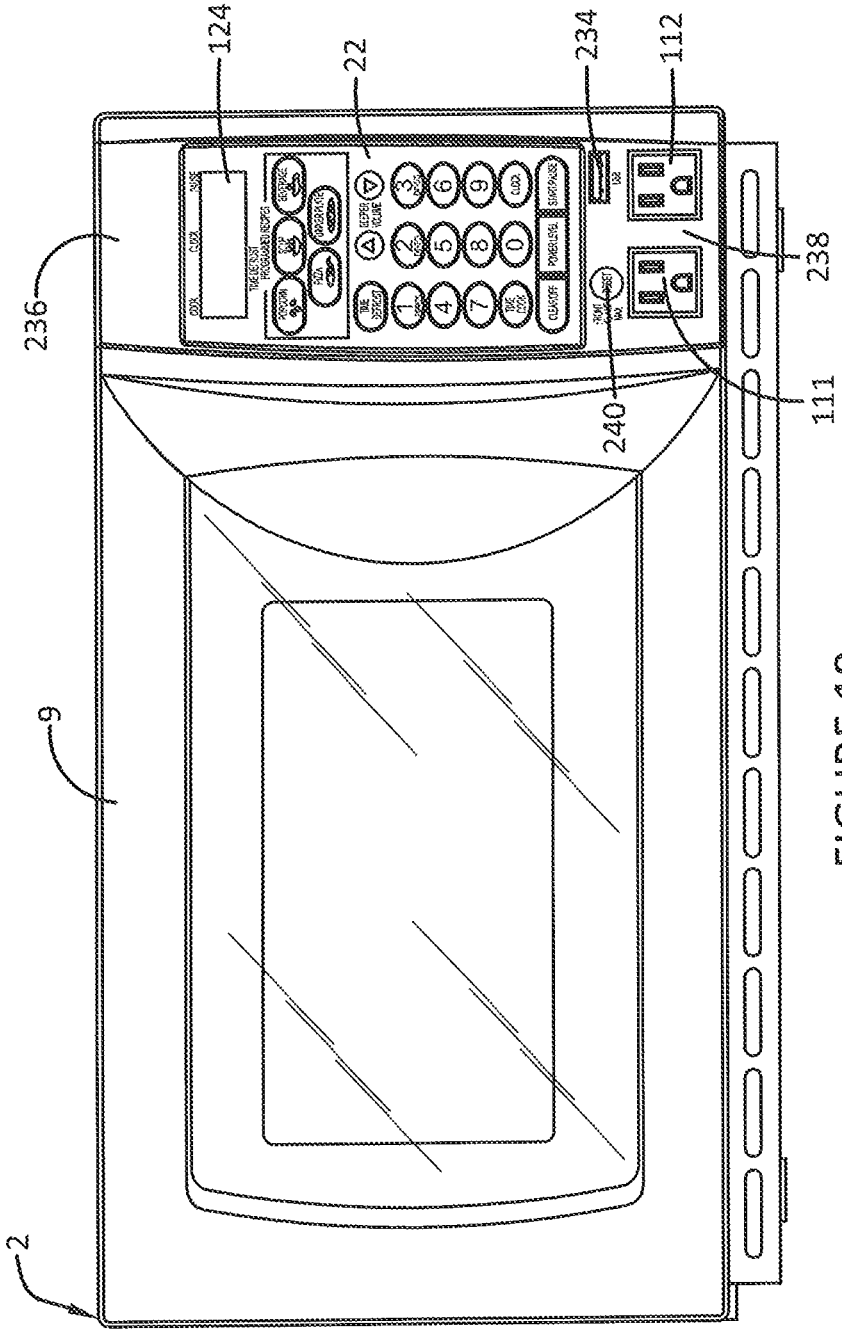


FIGURE 19

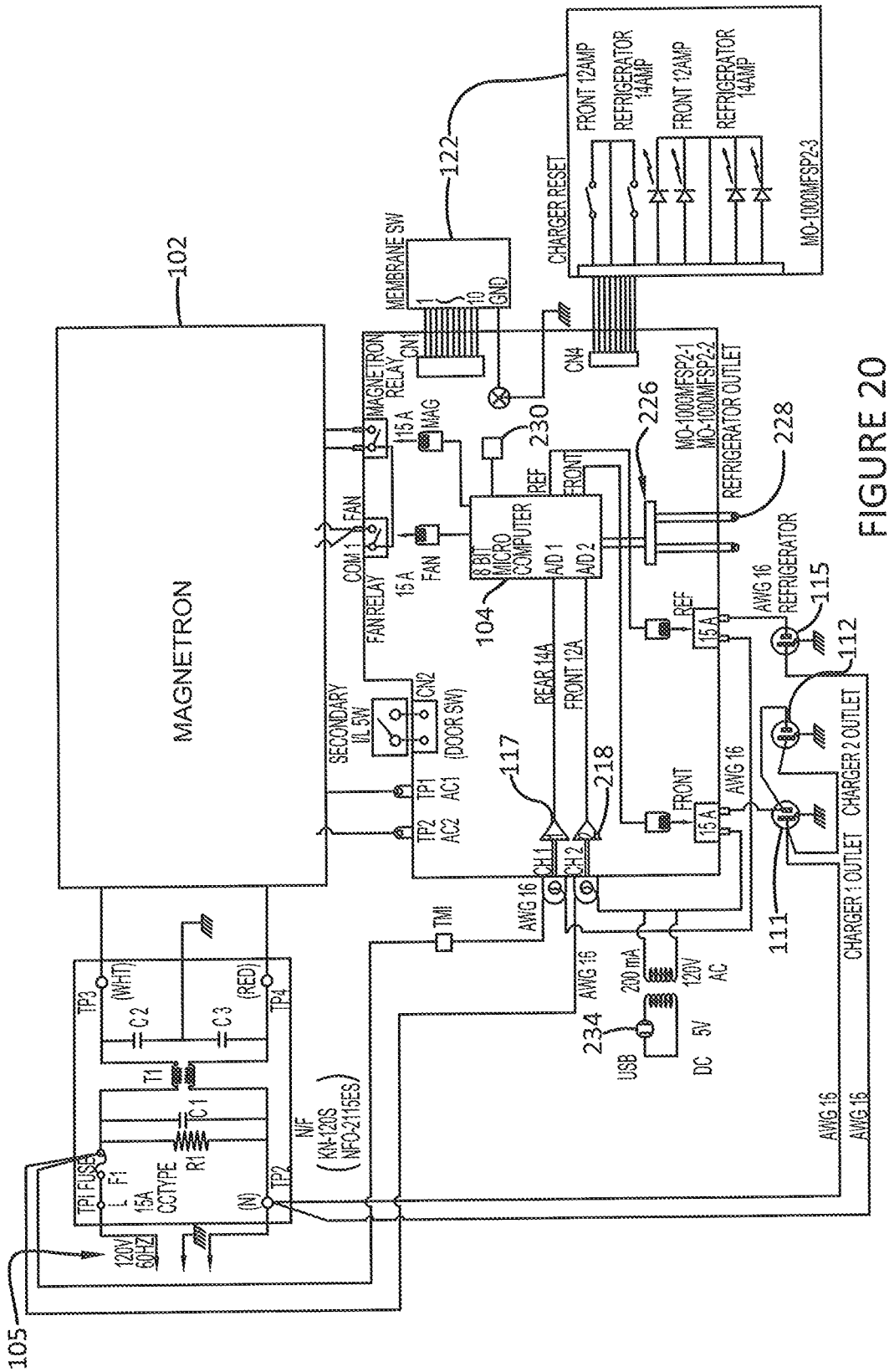
MAGNETRON
102
105
122
MEMBRANE SW
GND
CN1
CN4
CHARGER RESET
FRONT 12AMP
REFRIGERATOR 14AMP
MO-1000MFSP2-3
MAGNETRON RELAY
15 A
MAG
230
226
228
MO-1000MFSP2-1
MO-1000MFSP2-2
REFRIGERATOR OUTLET
REF
FRONT
8 BIT MICRO COMPUTER
A/D 1
A/D 2
104
FAN
COM 1
FAN RELAY
SECONDARY I/L SW
CN2
(DOOR SW)
TP1
AC1
TP2
AC2
REAR 14A
FRONT 12A
117
218
CH 1
CH 2
AWG 16
REFRIGERATOR
115
112
111
CHARGER 2 OUTLET
CHARGER 1 OUTLET
TMI
200 mA
120V AC
234
USB
DC 5V
TP3
(WHT)
TP4
(RED)
C 2
C 3
T1
C 1
R1
TP1 FUSE
F1
15A CCTYPE
(N)
TP2
N/F
(KN-120S NFO-2115ES)
120V 60HZ

FIGURE 20

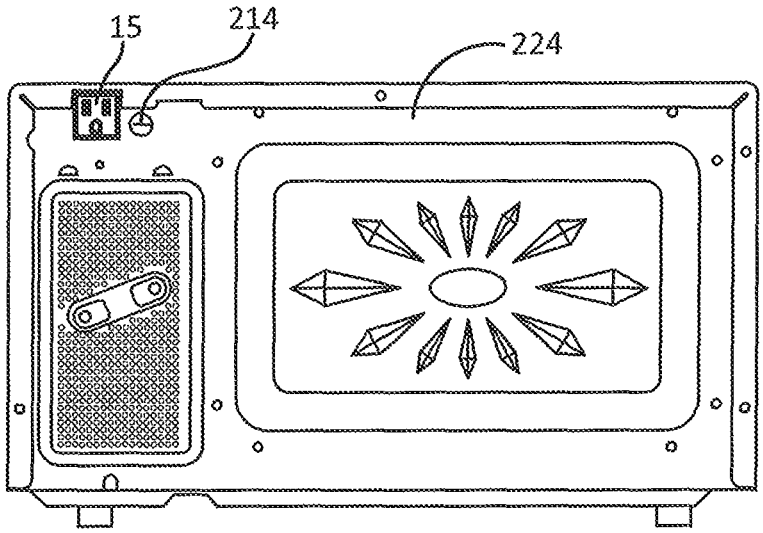


FIGURE 21

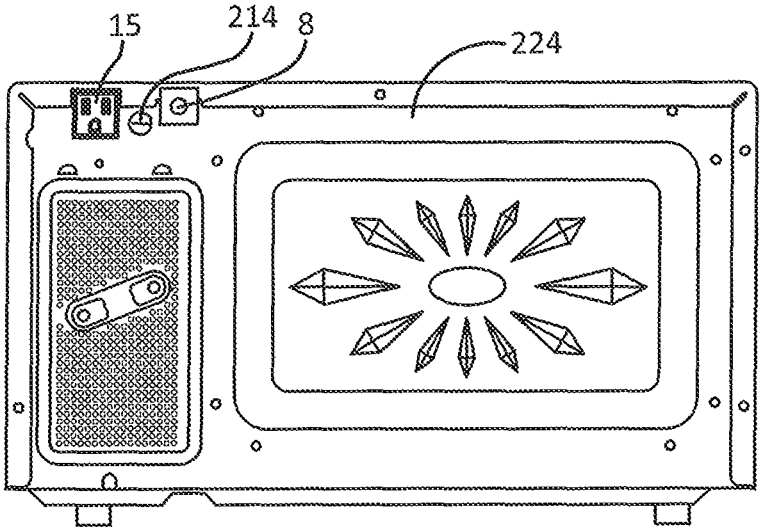


FIGURE 22

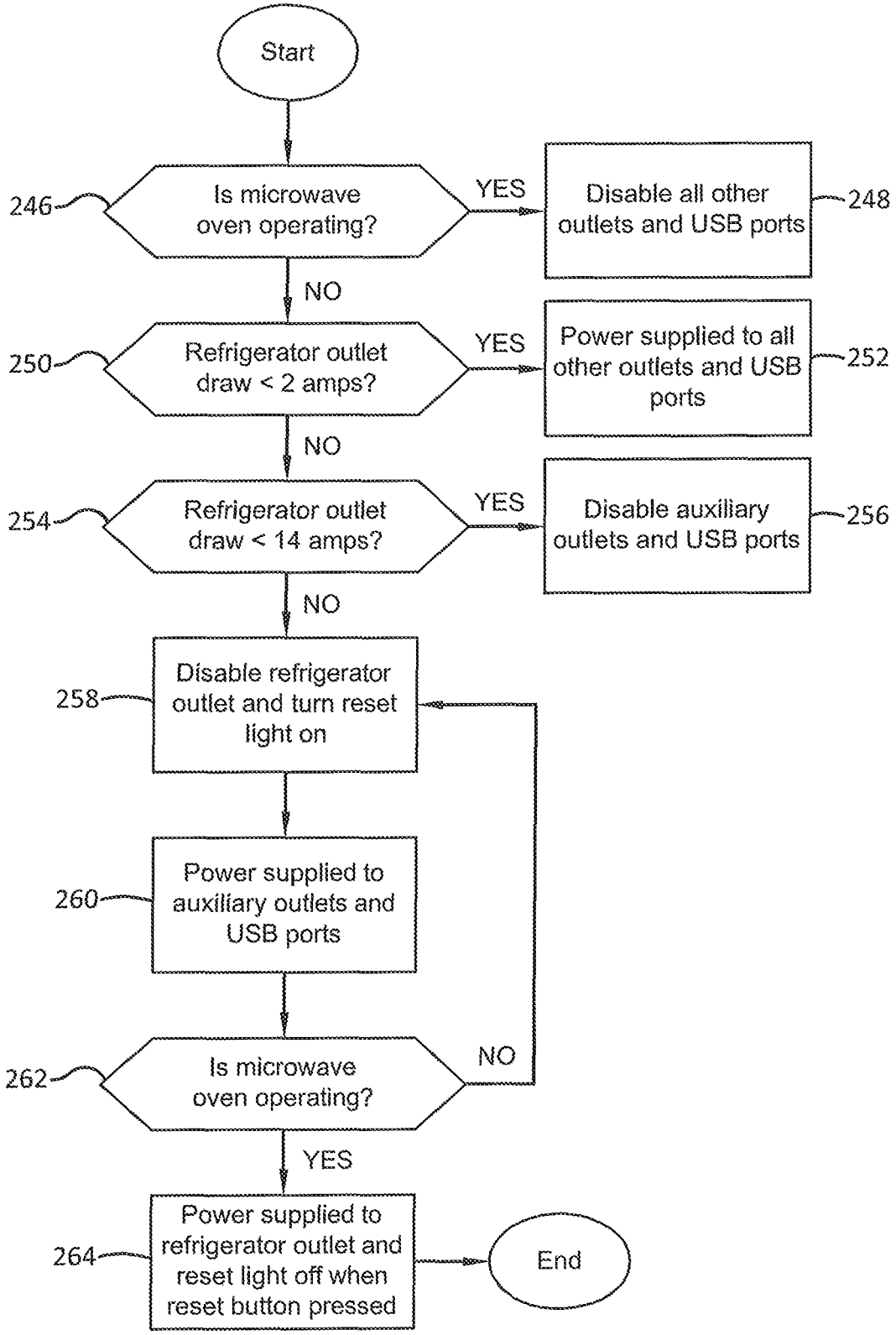
Start
246
Is microwave oven operating?
YES
Disable all other outlets and USB ports
248
NO
250
Refrigerator outlet draw < 2 amps?
YES
Power supplied to all other outlets and USB ports
252
NO
254
Refrigerator outlet draw < 14 amps?
YES
Disable auxiliary outlets and USB ports
256
NO
258
Disable refrigerator outlet and turn reset light on
260
Power supplied to auxiliary outlets and USB ports
262
Is microwave oven operating?
NO
YES
264
Power supplied to refrigerator outlet and reset light off when reset button pressed
End

FIGURE 23

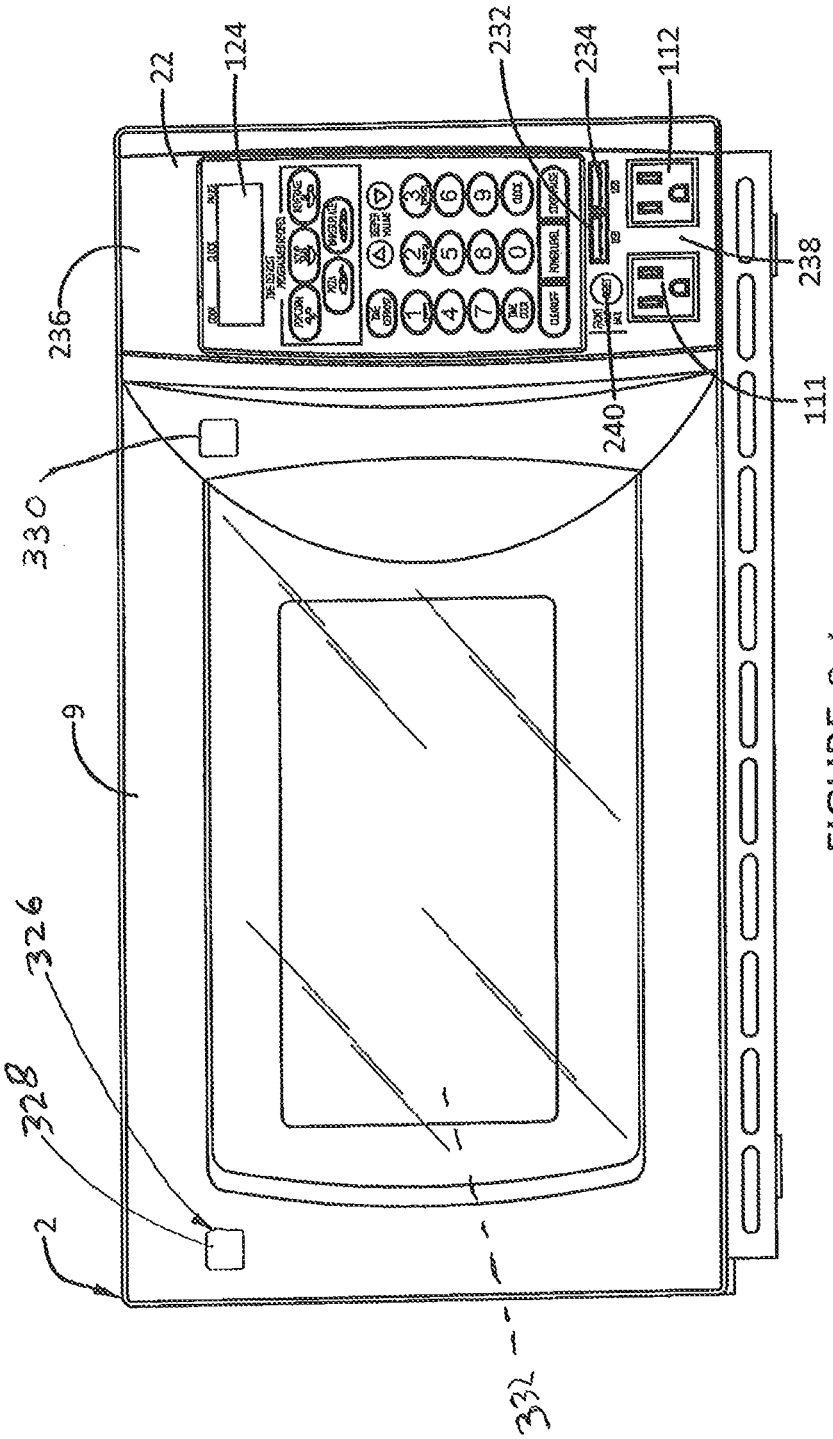


FIGURE 24

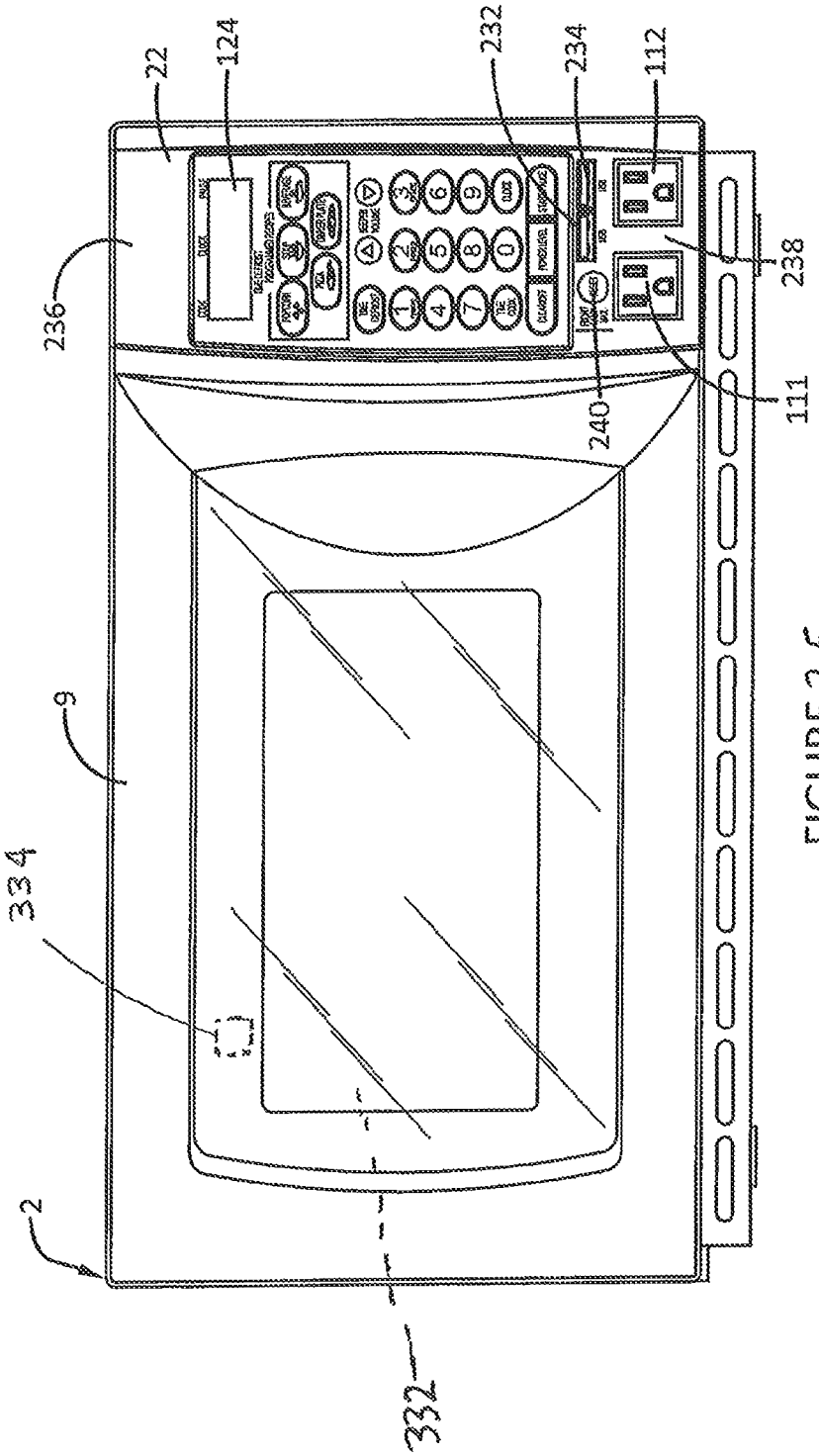


FIGURE 25

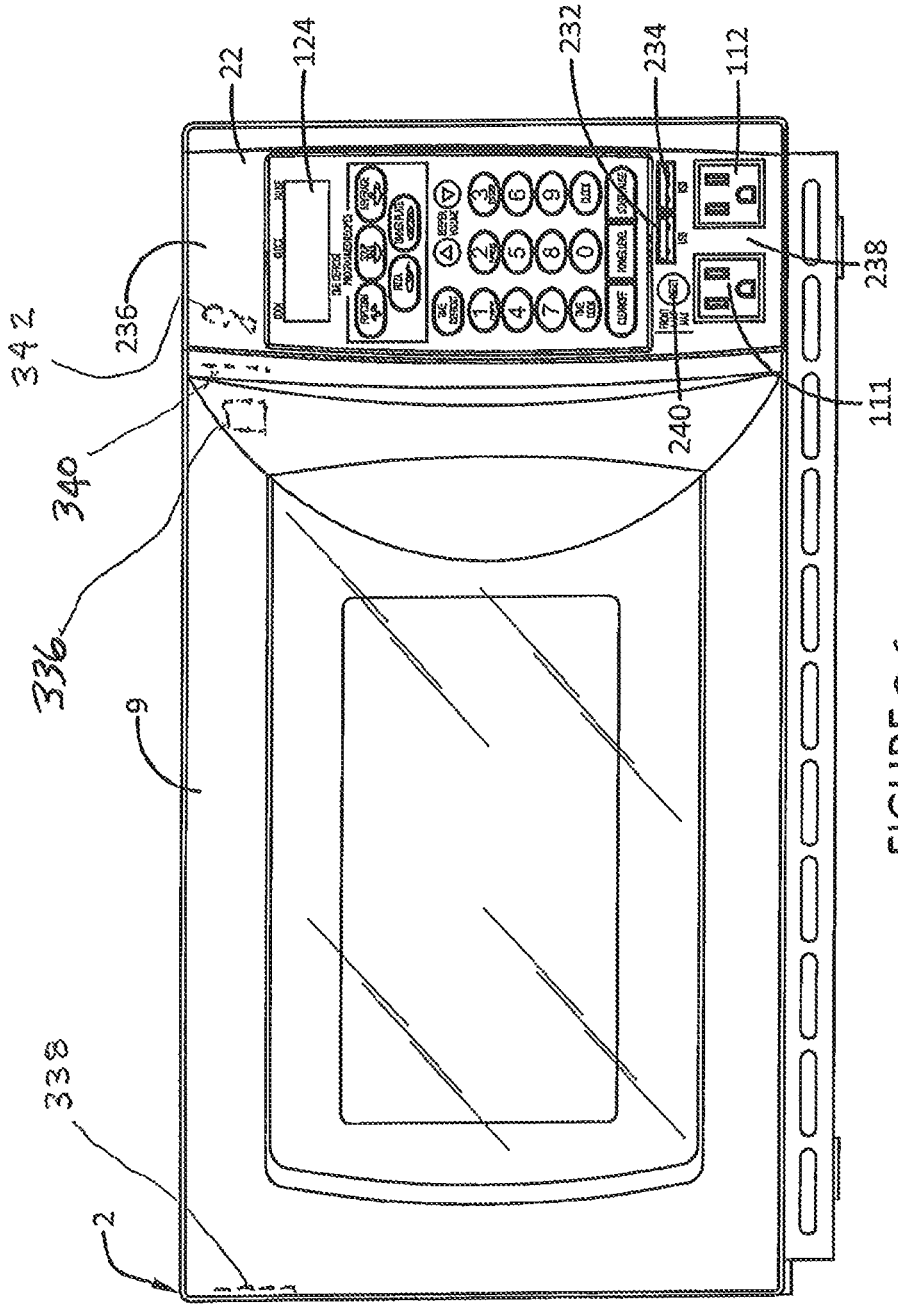


FIGURE 26

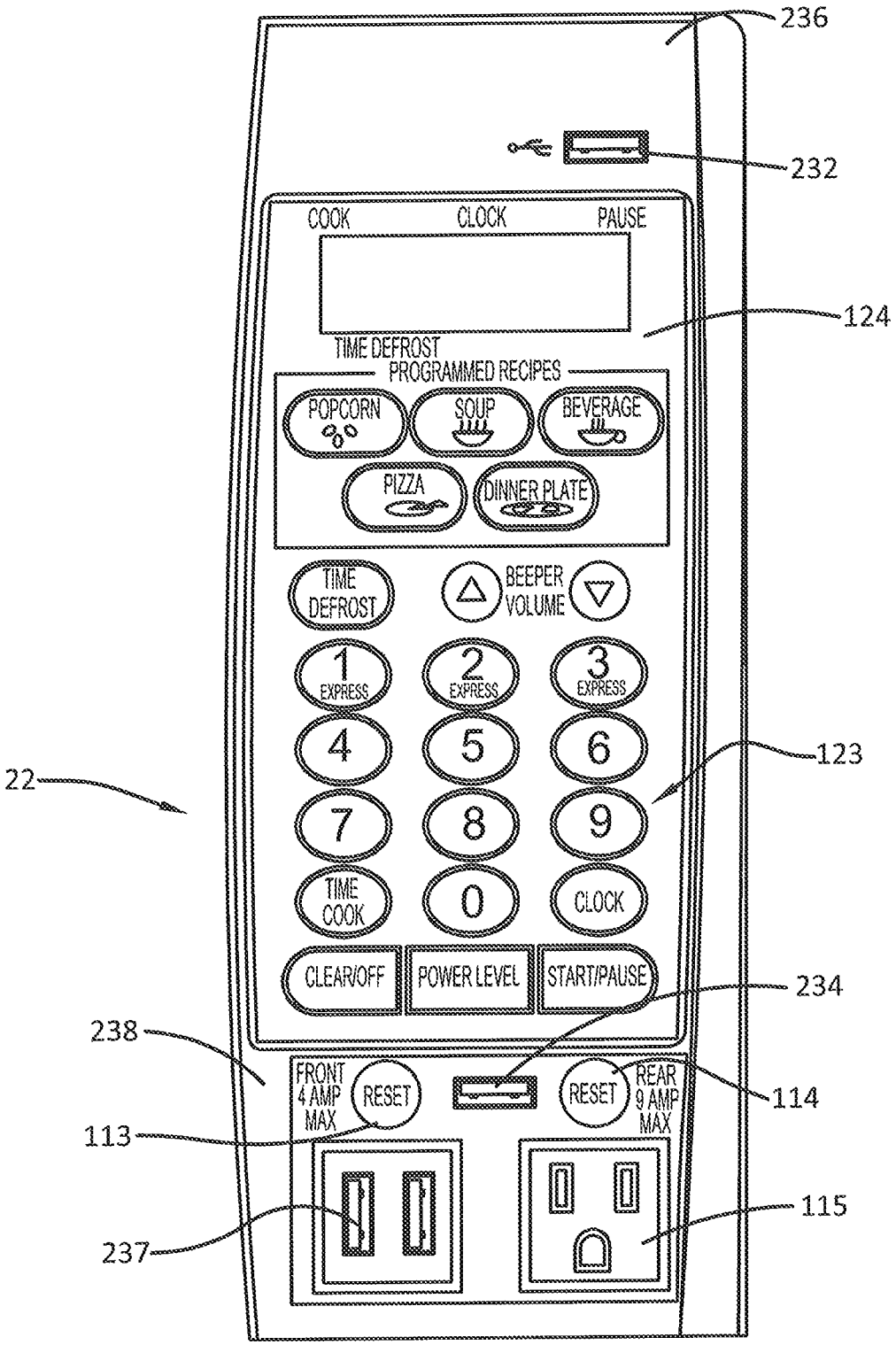
236
232
COOK
CLOCK
PAUSE
124
TIME DEFROST
PROGRAMMED RECIPES
POPCORN
SOUP
BEVERAGE
PIZZA
DINNER PLATE
TIME DEFROST
BEEPER VOLUME
1 EXPRESS
2 EXPRESS
3 EXPRESS
4
5
6
123
22
7
8
9
TIME COOK
0
CLOCK
CLEAR/OFF
POWER LEVEL
START/PAUSE
234
238
FRONT 4 AMP MAX
RESET
RESET
REAR 9 AMP MAX
114
113
115
237

FIGURE 27

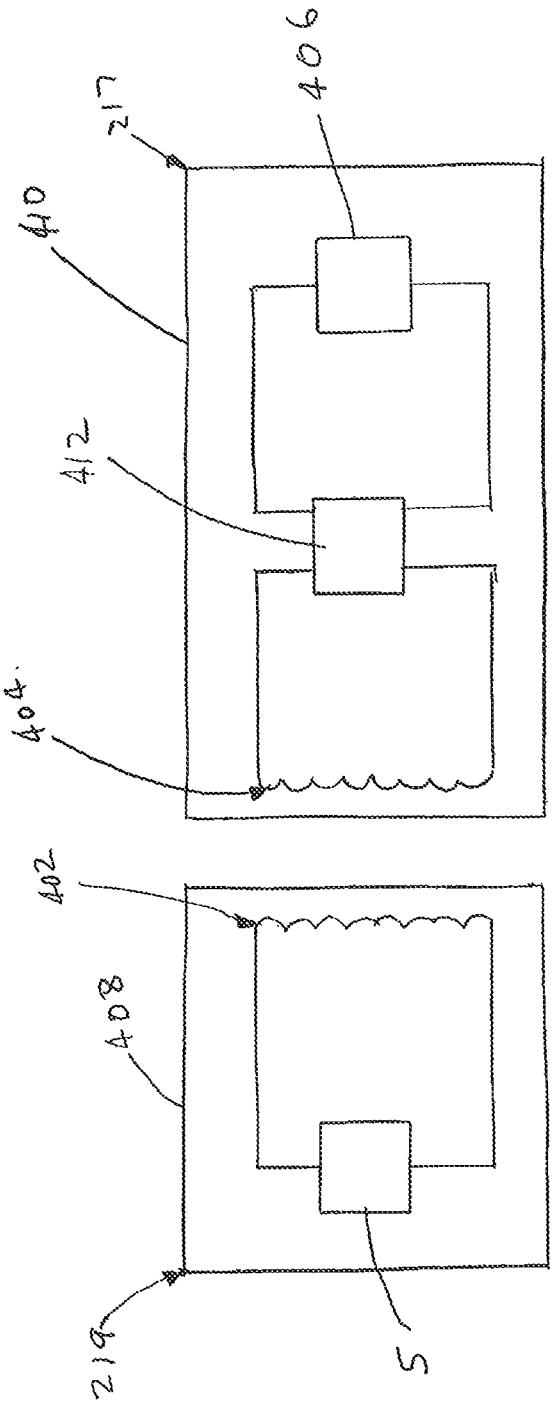


FIGURE 28

# MULTIPLE LINKED APPLIANCE WITH AUXILIARY OUTLET

## TECHNICAL FIELD

Exemplary embodiments relate to improvements to appliances. Specifically, exemplary embodiments relate to improvements to appliances that include compact refrigerator and microwave oven functionality.

## BACKGROUND

Compact refrigerators are used for many different purposes. They are often found in dormitories, hotels, offices and other establishments. Compact refrigerators are also often used in housing units for storage of beverages in bar areas or entertainment areas. Compact refrigerators provide useful storage for refrigerated items without the requirement for the considerable floor space and power draw that is required for a full size refrigerator.

Compact refrigerators and associated appliances may benefit from improvements.

## SUMMARY

In one exemplary embodiment, an apparatus is provided that includes a microwave oven. The microwave oven includes a radiation emitting microwave element and a microwave housing. The microwave housing bounds a cooking interior area. The radiation emitting microwave element is operative to irradiate the cooking interior area. The apparatus also includes a refrigerator. The refrigerator includes refrigerator housing. The refrigerator housing bounds a cooled refrigerator interior area. The refrigerator housing is in fixed operative connection with the microwave housing. The refrigerator includes a refrigerant compressor, or other refrigeration technology. The refrigerant compressor is operative to compress a refrigerant material. The refrigerant material is operative to cause cooling of the cooled refrigerator interior area. The apparatus includes at least one power control circuit. The at least one power control circuit is operative to cause electrical power to be selectively delivered to the microwave element and the compressor. One of the microwave element and compressor does not operate when the other of the microwave element and the compressor operates. A charging pad is provided on the microwave oven. The charging pad is configured for receiving an item to be charged by the charging pad. The microwave oven further includes at least one smoke sensor. In exemplary embodiments different types of smoke sensors may be used. An exemplary sensor includes a sensor emitter and at least one sensor receiver configured to receive radiation from the at least one smoke sensor emitter, wherein air of at least a portion of the cooking interior area extends intermediate of the at least one sensor emitter and the at least one sensor receiver. The apparatus also includes at least one safety circuit. The at least one safety circuit is in operative connection with the at least one sensor emitter, the at least one sensor receiver, and the microwave element. The at least one safety circuit is operative to cause the at least one sensor emitter to emit sensor radiation and the at least one sensor receiver to sense sensor radiation from the at least one sensor emitter while the microwave element operates during a cooking session. A determination is made that a transmission amount of sensor radiation from the at least one sensor emitter that reaches the at least one sensor receiver has fallen by at least a threshold amount during the cooking session, due to smoke in the cooking interior area. Responsive at least in part to the determination, the microwave element is no longer supplied with electrical power. Other features may be included in exemplary embodiments.



## BRIEF DESCRIPTION OF THE DRAWINGS

The system of the application is explained in more detail below with reference to the accompanying drawings, in which:

FIG. **1** is a front perspective view of an exemplary embodiment of an appliance system of this application.

FIG. **2** is a rear perspective view of the embodiment of FIG. **1** showing an alternative arrangement.

FIG. **3** is a schematic block diagram of an embodiment of the exemplary system.

FIG. **4** is an electrical schematic diagram corresponding to the embodiment of FIG. **3**.

FIG. **5** is a schematic logic flow diagram of an exemplary embodiment.

FIG. **6** is a schematic logic flow diagram of another exemplary embodiment.

FIG. **7** is a schematic logic flow diagram of another embodiment.

FIG. **8** is a graph illustrating the duty cycles of the appliances in the system of FIG. **3**.

FIG. **9** is a block diagram of an alternate embodiment.

FIG. **10** is an electrical schematic diagram of the embodiment of FIG. **9**.

FIG. **11** is an illustration of a control panel of the embodiment of FIG. **9**.

FIG. **12** is a front view of the microwave oven according to another embodiment.

FIG. **13** is a side view of the microwave oven door of FIG. **12**.

FIG. **14** is a top perspective view of a charging pad on the top portion of a microwave oven.

FIG. **15** is an illustration of a control panel of an alternate embodiment.

FIG. **16** is an electrical schematic diagram of the embodiment of FIG. **15**.

FIG. **17** is a front view of the microwave oven according to another embodiment.

FIG. **18** is an electrical schematic diagram of the embodiment of FIG. **17**.

FIG. **19** is a front view of the microwave oven according to another exemplary embodiment.

FIG. **20** is an electrical schematic diagram of the embodiment of FIG. **19**.

FIG. **21** is a rear view of the microwave oven according the embodiments of FIGS. **12-19**.

FIG. **22** is a similar view as that of FIG. **21** except that the AC cord is shown.

FIG. **23** is a schematic logic flow diagram of an exemplary embodiment.

FIG. **24** is a front view of the microwave oven according to another exemplary embodiment.

FIG. **25** is a front view of the microwave oven according to another embodiment.

FIG. **26** is a front view of the microwave oven according to another exemplary embodiment.

FIG. **27** is an illustration of a control panel of an alternate embodiment.

FIG. **28** is a schematic diagram corresponding to the embodiment of FIG. **14** showing the charging pad and a device being charged.

## DETAILED DESCRIPTION

A multiple linked appliance system **1**, for example, a combination microwave oven **2** and refrigerator **3** incorporating features described in the present application illustrated in the Figures. Although exemplary embodiments will be described with reference to the features shown in the drawings, it should be understood that other embodiments may have many alternate forms. In addition, any suitable size, shape or type of elements or materials could be used. The computer or controller devices described in this application may be constructed having one or several processors and one or several program product modules stored in one or several memory elements. For illustration, computer or controller components may be described as individual units by function. It should be understood, that in some instances, these functional components may be separated or combined in other components.

In the exemplary embodiments, the circuits described herein may comprise one or more circuits including processors which for purposes hereof corresponds to any electronic device that is configured via circuit executable instructions that can be implemented in either hardware circuits, software, firmware or applications that are operative to enable the circuits to process data and carry out the other actions described herein. For example, the circuits may include circuits that correspond to one or more or a combination of a CPU, FPGA, ASIC or any other integrated circuit or other type or circuit that is capable of processing data. The processors may be included in a computer, server or other type of electronic device. Further, the circuits described herein may include data stores that correspond to one or more of volatile or non-volatile memories such as random access memory, flash memory, magnetic memory, optical memory, solid state memory or other devices that are operative to store computer executable instructions and data. Computer executable instructions may include instructions in any of a plurality of programming languages and formats including, without limitation, routines, subroutines, programs, threads of execution, objects, methodologies and functions which carry out the actions such as those described herein. Structures for the circuits and processors may include, correspond to and utilize the principles described in the textbook entitled Microprocessor Architecture, Programming, and Applications with the 8085 by Ramesh S. Gaonker (Prentiss Hall, 2002), which is incorporated herein by reference in its entirety. Of course it should be understood that these circuit structures are exemplary and in other embodiments, other circuit structures for storing, processing, resolving and outputting information may be used.

In exemplary embodiments the refrigerator may be connected to a power supply that provides a connection that enables the microwave oven to be connected to the same electrical supply. A single plug, therefore, may serve to connect both appliances and the current required for each appliance may be supplied by the same supply cord and circuit. In exemplary embodiments power may be supplied by the 110V AC current outlet.

To make this combination attractive for use in dorm rooms, hotel rooms, recreational vehicles, tractor trailer cabs, and other similar locations, it may be necessary to assure that the peak current draws of both appliances are not demanded from the supply at the same time. Many household circuits are protected from overload conditions by an automatic circuit breaker that is activated when current in the circuit exceeds the breaker rating. This is 15 amps in many circuits.

The duty cycle of an exemplary refrigerator used in these combined systems includes a current spike that occurs during the first few seconds of operation. This is the start up current for the refrigerator compressor. The current draw is considerably reduced as the compressor attains its full operational speed. In typical refrigerator appliances the peak current may be in the range of 7 to 9 amps, while the steady state current may level off at 1.4 amps or less. A microwave oven demands a relatively steady 8 to 13 amps of cooking power during operation of the cooking element. It is apparent that an overload condition may occur when both appliances are placed in operation absent suitable control circuitry.

In an exemplary embodiment, a combination microwave and refrigerator system is constructed having a single electrical plug input supply. The electrical supply in the exemplary embodiment is directly connected to the microwave oven. The microwave oven is adapted to provide power to the refrigerator through a power supply outlet, and to auxiliary receptacles adapted for connection to devices that operate at a low power operation draw. The microwave oven includes circuitry including a processor based controller adapted to monitor operation of the refrigerator compressor and control the power to the microwave magnetron cooking element and other components. The current draws on the low power receptacles are separately monitored for control by the microwave controller. The microwave controller is adapted to balance the duty cycles of the connected appliances in operative connection therewith to avoid overload conditions. A control logic flow is implemented internally within the circuitry of the microwave controller. A receptacle or other power connecting power supply outlet for the refrigerator and the low power auxiliary receptacle may be implemented as part of the microwave control panel on the microwave oven.

In one embodiment, the auxiliary outlets are constructed to provide low power for the purpose of recharging batteries included in cellular mobile phones, personal media devices and digital cameras, in addition to operating lap top computers and other similar low power devices. The current to the auxiliary outlets is sensed by suitable circuitry in operative connection with the microwave controller.

In another embodiment, the power to the auxiliary outlets is disabled through operation of the microwave controller when the microwave magnetron is energized or whenever the current to the auxiliary outlets exceeds a preset value.

In one embodiment, a programmed control model for control logic flow is established and executed by the microwave controller. The model is dependent on the state of operation of the microwave cooking element or elements which are referred to herein as a magnetron. As part of the exemplary control model, the power draw of the compressor is monitored to sense operation of the compressor to compress refrigerant to provide cooling. When cooking power is demanded by the microwave the compressor is disabled by having electrical power thereto withdrawn by the control circuit for a preset minimum period. When power demand to the magnetron ceases, refrigerator compressor power is restored provided that the preset minimum period has expired.

In another exemplary embodiment of the control model, sensing circuits are operative to monitor current draw on the auxiliary outlets. The control model is adapted to cause the controller to disable the power to the auxiliary receptacles, if the microwave magnetron is in operation. In addition the auxiliary receptacles are disabled if a predetermined maximum current draw is sensed. Another control model is based

on operation of the refrigerator and operates to disable the auxiliary receptacles when the compressor is in the start up mode. Of course these approaches are exemplary and in other embodiments, other approaches may be used. Further while in the exemplary embodiment the controller is integrated with the microwave oven, in other embodiments the controller may be integrated with the refrigerator or other device, or may be configured as a separate component.

In one aspect of an exemplary embodiment, a non-transitory processor readable medium having processor executable program instructions embodied therein for operating at least one processor of a control circuit to control a system of multiple linked appliances having a microwave oven, a refrigerator, and an auxiliary power supply outlet is provided. The processor executable program code causes the control circuit to disable the refrigerator and the auxiliary power supply outlet, when the microwave demands high power such as magnetron cooking power, and enable the auxiliary power supply outlet when the microwave is not drawing cooking power.

One exemplary embodiment of a multi-appliance interconnected system **1** is illustrated in FIG. **1**. This embodiment consists of two appliances, a refrigerator **3** and a microwave oven **2**. Refrigerator **3** is electrically connected to microwave oven **2** by power cord **7** to refrigerator receptacle **15**, shown at the rear of the microwave **2** in FIG. **2**. Refrigerator **3** is generally subject to control by the microwave microprocessor controller which is alternatively referred to herein as power control circuit **4** of the microwave oven **2**. The power control circuit may be operative to cause electrical power to be selectively delivered to and/or withheld from the microwave magnetron and the refrigerator compressor. A single cord **8** provides input electrical power to the system **1** from receptacle **5** through microwave **2**. In the case where stand alone appliances are used, as shown in FIGS. **1** and **2**, microwave oven **2** is connected directly to power source **5**. The refrigerator **3**, as the heaviest component, is used as the base with the microwave oven **2** stacked on top. In the selection of the refrigerator **3**, it would be advantageous in some embodiments for the height of the refrigerator to be no more than 48 inches above the floor. This provides a more ergonomic operation of the microwave oven **2** for the user. In addition, in the stacked position of the appliances in an exemplary embodiment, the doors **9** and **10** of the microwave **2** and refrigerator **3**, respectively, are arranged in a common plane.

At least one power control circuit **4** serves as a controller for the operation of the microwave oven **2** and is also adapted to control the other components of system **1**, as shown in FIG. **3**. Power is distributed throughout the system **1** under control of microwave controller **4** and digitally operated switches such as relays **19** and **20** represented in FIG. **3**. It should be understood that in some embodiments the relays may control power delivery via mechanical contacts while in other embodiments, solid state relays may be used. Power is distributed to each of the appliances **2** and **3**, and to auxiliary low power receptacles **11** and **12**. In use lamps **13** and **14** in the form of LEDs or the like may be positioned adjacent to the auxiliary receptacles to indicate power being available from the adjacent receptacle or power to the receptacle being disabled. The low power auxiliary receptacles **11** and **12** are provided to permit convenient access for plugging in a low power device, for example, devices including rechargeable batteries, such as cellular phones, PDAs, or other electronic devices that do not demand high power. As shown in the graph of FIG. **8**, there are instances during which, if more than one of the appliances is in use, the cumulative current would cause an overload condition.

An exemplary control panel **22** of microwave oven **2** may be adapted to provide a display of the particular status of the controlling relays. For example, LEDs **13** and **14** may indicate that power to the outlets **11** and **12** are disabled or available. In one embodiment the lamps will light when power is available at the outlet and flash when disabled. In another embodiment the lamps will light when power is not available at the outlet and not activate when power is available at the outlet as a means to reduce the standby power draw. A button operated touch panel is used in the exemplary embodiment to provide manual control.

As shown in FIG. **4**, in order to control the power to the microwave **2**, refrigerator **3** and receptacles **11** and **12**, sensing circuits, may be coupled to the control circuit to monitor current draw by the appliance components and the auxiliary receptacles. A relay **20** is connected in the power line to the refrigerator and may be actuated by signals from controller **4**. In particular, according to an exemplary embodiment, sensing circuits **16**, as shown in FIG. **4**, have sensors **17** and **18** coupled to the power line of the auxiliary outlets **11** and **12** to monitor the current being drawn by a connected device. Sensors **17** and **18** may include current sensing transformers of the type available from Triad Magnetics of Corona, Calif. The signals generated by sensors **17** and **18** may be used to activate switches or other control components, such as relays **19**. Relays **19** may be actuated by control circuit **4** to enable and disable the delivery of power to the low power auxiliary outlets **11** and **12** in response to signals from sensors **17** and **18**. A maximum current may be set through the program logic associated with the at least one power control circuit **4** to prevent overload of the outlets **11** and **12**. In one embodiment of the system, the maximum current limit is set at 2 amps, and the control circuitry is operated to cease power delivery in situations where the power draw exceeds this amount. Of course this approach is exemplary.

In another embodiment, a clock function **21** included in the at least one control circuit **4** is used to provide timed delays during which, for example, refrigerator **3** would be prevented from undesirably rapid on/off cycles. When the compressor of the refrigerator **3** is disabled during microwave cooking operation, a time delay of 3 minutes is provided during which the compressor of the refrigerator **3** will remain disabled, even if microwave use is only for a short period. Control circuit **4** may be programmed to manage the power delivery to the components of the system to avoid overload conditions, while minimizing disruptions in the use of an individual appliance. A model of operative events and related control operations may be designed into the program instructions executed by at least one control circuit **4** to provide a control methodology as illustrated in FIGS. **5-7**.

In one embodiment, as illustrated in the block diagram of FIG. **3**, at least one control circuit **4**, constructed as part of the controller for microwave **2**, is adapted to receive and process the sensor signals and identify particular events in the system **1** related to a particular appliance or combination of appliance conditions. Circuit **4** controls the power to microwave **2** and refrigerator **3** and also low power receptacles **11** and **12** to avoid overload conditions. The circuit **4** is operative to execute the control methods illustrated and described below. In one exemplary embodiment, the circuit **4** is operative to control operations of microwave oven **2** and is adapted to execute the program instructions described

below. The control circuit is coupled directly to refrigerator outlet **15** and low power outlets **11** and **12**.

In one exemplary embodiment, shown in FIG. **1**, the outlets **11**, and **12**, are included as part of the front control panel of microwave oven **2**. In FIG. **2**, in another embodiment, the auxiliary receptacles **11** and **12** and refrigerator receptacle **15** are accessible at the rear of the microwave oven **2**. In these alternative embodiments, the microwave oven **2** is connected by supply cord **8** directly to power supply receptacle **5**. Refrigerator **3** is connected by power cord **7** to receptacle **15** on microwave oven **2** as shown in FIG. **2**.

In one exemplary embodiment, control models for program logic flows are established as shown in FIGS. **5-7** for execution by the at least one control circuit **4**. These models can be in the form of processor executable instructions stored in a computer readable medium, such as software or firmware associated with the circuit **4**. The models shown are, in the first instance, dependent on the state of operation of microwave oven **2**. The current demands of the microwave **2** when drawing cooking power are generally the most significant contribution to overload, as shown in FIG. **8**. To avoid overload conditions, power to the low power receptacles **11** and **12** and refrigerator receptacle **15** is disabled during microwave magnetron operation. If the refrigerator **3** compressor is drawing power when the microwave **2** is turned on to commence cooking, the power to the refrigerator compressor is turned off and clock function **21** is used to determine a predetermined period during which the compressor of refrigerator **3** cannot be restarted. A time delay, for example, of 3 minutes, may be set through programming of the control circuit and when this delay period is expired, receptacle **15** may again be enabled, providing the control circuit determines in accordance with its programming and sensed parameters that microwave cooking operation has ceased. This prevents a too rapid restart of the compressor that may otherwise result in damage.

In some exemplary arrangements, the control circuitry of the power controller may operate responsive to sensing the power draw of the refrigerator and the cooking element of the microwave oven so as to detect the power draw reaching a threshold which should not be exceeded to prevent an overload condition. In other exemplary arrangements, the control circuitry may operate to detect inputs that may be provided by input devices and which are operative to cause power drawing devices such as the magnetron of the microwave oven or the compressor of the refrigerator to operate. In such arrangements, the control circuitry may operate to detect the signal from a thermostat within the refrigerator which indicates that the thermostat is signaling that the refrigerant compressor should operate to cause the temperature to be lowered within the cooling area of the refrigerator. In such arrangements, the control circuitry may operate to detect the signal from the thermostat and prevent the delivery of power to the compressor in situations where the cooking element of the microwave oven is operating. In such embodiments the control circuitry may delay the supply of power to the compressor until the cooking element of the microwave oven has ceased operation. Likewise an exemplary embodiment of the control circuitry may be operative to detect inputs to the control panel of the microwave which are provided by a user to commence microwave operation. In response to the detection of such inputs, the exemplary control circuitry may be operative to first cause a determination to be made as to whether the refrigerator is drawing the level of power that indicates that the compressor thereof is operating. In response to a determination that the refrigerator is drawing a level of power that is incompatible with operation of the microwave cooking element, the exemplary control circuitry may be operative to cause power to the refrigerator compressor to be withdrawn. Thereafter the control circuitry may be operative to cause power to be supplied to the cooking element of the microwave. Further in exemplary embodiments, the control circuitry may also monitor the power draw of auxiliary outlets or other power delivery points to assure that the level of draw that is currently occurring will not be an impediment to an operation that is being requested by an input device of the apparatus before the apparatus begins to operate in a manner that will cause increased power draw. Thus the exemplary apparatus enables the preventative action of discontinuing operation of a power drawing component before instituting operation of another component that draws a high level of power. Of course it should be understood that this approach is exemplary and in other embodiments, other approaches may be used.

In the embodiment shown in FIG. **5**, if low power is demanded at receptacle **11** or **12** and microwave oven **2** is not in use for cooking, power is supplied to the low power receptacles, provided further, that the current demand at an individual outlet does not exceed a preset limit, for example, 2 amps. Since the auxiliary outlets may be enabled during refrigerator compressor operation, there may be an overload generated at peak compressor operation. In one embodiment the control circuitry acts to disable the auxiliary outlets during compressor startup to prevent accidental overload of the system. Therefore as illustrated in the logic flow diagram of FIG. **5**, control circuitry may be adapted to check the operational status of the refrigerator, as well as the microwave oven, prior to enabling the auxiliary outlets.

FIGS. **9-11** illustrate another embodiment. In this embodiment the sensing components **117** and **118** are configured to reduce the risk of overload by the combined demands of the auxiliary outlets **111** and **112** and the refrigerator outlet **115**. In the exemplary configuration as shown in FIG. **10**, current sensor **117** is configured to monitor the current draw through the refrigerator outlet **115** and the circuitry is operative to limit the refrigerator current draw at the outlet **115** so that it does not exceed 10 amps. Current sensor **118** is connected to monitor the combined current in the auxiliary outlets **111** and **112**. Current sensor **118** and the circuitry is to limit the combined auxiliary outlet current draw to 4 amps. In this manner the risk of overload is minimized. As represented in the block diagram of FIG. **9**, the microwave **102** has at least one control circuit comprising controller **104** that is operatively connected to power supply **105**. Clock function **121** which is shown schematically separately but may be part of the controller provides a timing device to determine a restart delay for power to refrigerator **103**. Sensing circuit/sensor **117** is to monitor the current demanded by refrigerator **103** and sensing circuit/sensor **118** is connected to low power receptacles **111** and **112** is operative to monitor the combined current in receptacle **111** and **112**. In the exemplary embodiment the control circuitry is shown as operative to control the availability of electrical power to some devices as a whole. For example, if the control circuitry operates to cause power not to be available to the refrigerator, all components of the refrigerator, such as the internal lights, air circulation fan, etc., are not supplied with electrical power, in addition to the compressor, which is the component which is most likely to draw power at a level which may be excessive. However in other embodiments, the control circuitry may be configured to deliver and withhold power

selectively to individual refrigerator components or groups of such components. Thus in such embodiments the power control circuitry may be operative to withdraw power to the high power draw components (s) such as the compressor, while still making power available to other low power draw components such as the internal fan and/or lights.

Likewise in exemplary embodiments, the power control circuitry is operative to selectively allow power to be available or withdrawn from components of the microwave. For example, exemplary embodiments control the availability of power to selected components of the microwave such as the magnetron and the auxiliary outlets. The power control circuitry of exemplary arrangements may operate to maintain electrical operation of certain components, even though electrical power to other components is not available. For example, an exemplary controller may operate to maintain power to the clock display output on the control panel at all times. Further some exemplary arrangements may assure that power is maintained to control circuitry with programmed settings so that programmed data is not lost. This may include for example programmed data concerning a future time to turn on the cooking function, the power level and/or how long to cook. This way if the memory of the microwave has been programmed to begin to cook a food item placed inside the microwave oven at a future time so it is cooked by the time a person returns (for example) the programmed instructions to carry out those instructions will not be lost. Alternatively, configuration data that enables the microwave oven controller to communicate in a wireless network or with other devices will be preserved even though the control circuitry operates to cause electrical power not to be available to certain components. Of course these are merely examples.

It should be understood that for purposes hereof when it is stated that power is withdrawn or not made available to a microwave, refrigerator or other assembly of components, the terminology refers to not making such power available to the entire assembly or to only certain selected components that draw high power such as the refrigerant compressor or magnetron. Likewise herein references to the microwave or the refrigerator operating or running refers to operation of the respective high power draw components such as the magnetron or the compressor, for example.

In the exemplary embodiment, as shown in FIG. **11**, a control panel **122** is arranged with a keypad **123** for manual control and a display **124**. Auxiliary outlet **111** is shown as accessible from the front and is associated with a status LED indicator and reset button **113** that may be caused to be operative during use and switch to a flashing mode when the microwave is drawing cooking power. Refrigerator outlet **115** is also accessible on the front panel and is associated with an LED indicator and reset button **114**. Similarly LED indicator **114** is controlled to be on by being illuminated during use of the refrigerator and to switch to a flashing mode when the microwave is drawing cooking power. In another exemplary embodiment, the status LED indicator and reset button **113** may be caused to be off during use and switched on or to a flashing mode when the microwave magnetron is drawing cooking power. Similarly, in this embodiment, the LED indicator **114** is controlled to be off during operation of the refrigerator compressor and switched on or to a flashing mode when the microwave radiation cooking element is operating.

A further embodiment of the logic flow operational model is shown in FIG. **6**. In this model, the refrigerator compressor draws or demands power. This may be triggered by a temperature rise of the refrigerator interior area within the housing of the refrigerator and involve start up of the refrigerator compressor with an associated peak power demand. If the microwave cooking element is sensed by the control circuitry as currently drawing cooking power, the programming of the control circuitry causes power not to be available the refrigerator so that operation of the refrigerator compressor will be delayed. If the microwave cooking element was on and subsequently cycled off, the clock function **21** must be checked by the controller to determine if power availability to the refrigerator to restart can occur. Under some circumstances, it may be necessary to give the refrigerator compressor priority to prevent an undesirable rise in temperature. In the latter instance, the control circuit can be coupled to the refrigerator temperature sensor to execute a programmed sequence during which the microwave cooking element will be disabled by not having power supplied thereto to allow the refrigerator to operate long enough to return to proper operating temperatures.

In the embodiment of FIG. **7**, the exemplary control circuitry operates to give priority to the power demands of the microwave oven, as indicated above. Use of the receptacles **11**, **12**, and **15** are, therefore, caused to be disabled during microwave cooking operation. The operational models which carry out the logic represented in FIGS. **5-7**, may be established by logic flows implemented by instructions that are programmed or imbedded in the control circuitry of controller **4**.

In this manner a system of linked appliances, including a microwave oven, refrigerator, and at least one low power draw device or appliance may all be connected through a common supply cord to a receptacle providing house current or other electrical power level without the risk of inconvenient interruptions or damage during use caused by overloads.

It is also advantageous to provide such a combination microwave/refrigerator system that also provides auxiliary outlets for low power applications, such as for the purpose of recharging batteries in cellular phones, operating lap top computers and other low power devices, while controlling the operation of the appliances to avoid overload conditions.

In another exemplary embodiment as illustrated in FIGS. **12** and **13**, the auxiliary outlets or electrical power receptacles **211**, **212** may be included as part of the front control panel **222** of the microwave oven **202** and located on the upper portion **270** of the front control panel **222**. The auxiliary outlets **211**, **212**, front control panel **222** and microwave oven **202** are similar to auxiliary outlets **11**, **12**, front control panel **22**, and microwave oven **2** except as discussed below. In this exemplary embodiment, the auxiliary outlets **211**, **212** are positioned side by side with respect to each other with each of the auxiliary outlets **211**, **212** being at the same height as the other. The auxiliary outlet **211** of FIG. **12** may be associated with a status LED indicator and reset button **213**, which is located on the lower portion **272** of the front control panel and in vertical alignment with the auxiliary outlet **211**. The status LED indicator and reset button **213** may be caused by the control circuitry of the controller to be on during use and switched to a flashing mode to indicate that power is not available therefrom when the microwave oven **202** is drawing cooking power. The auxiliary outlet **212** of FIG. **12** may be associated with status LED and reset button **214**, which is located on the lower portion of the front control panel and in vertical alignment with the auxiliary outlet **212**. The status LED indicator and reset button **214** may be caused by the controller to be on during use and switched to a flashing mode to indicate that power is not available therefrom when the

microwave oven **202** is drawing cooking power thereto is withdrawn. In another exemplary embodiment, the status LED indicator and reset button **213** may be caused to be off during the time power is available for use and switched on or to a flashing mode when the microwave oven is running and power thereto is withdrawn. Similarly, in another embodiment, the status LED indicator and reset button **214** may be caused to be off during power availability and switched on or to a flashing mode when the microwave oven is running or the refrigerator is running and the controller causes power not to be available. Other elements and operational features may be similar in structure and function as that of the embodiments shown in FIGS. **1-11**. Thus, the same reference numbers will be used in this exemplary embodiment to indicate elements that are similar in the embodiments shown in FIGS. **1-11**.

Smart technology may be integrated in some of the exemplary embodiments. For example, a user may be able to monitor and/or control the refrigerator **3** such as by turning it on and off remotely by a remote device **217**. The remote device **217** may include a hand held device such as a cellular phone. The cell phone may also be a smart phone. In some exemplary embodiments, the refrigerator, the microwave and/or the controller may include circuitry suitable for communication in a wireless network. Such a wireless network may be established in the facility, residence, office or other location where the combined refrigerator and microwave appliance is operated. Such devices may include circuitry that enables transmission of wireless signals to and from such components. Such communications may include communications of operational properties such as operating status, temperature, programmed values or other information that is pertinent to the operational condition of the particular device. In further exemplary arrangements, circuitry may be operative to enable received wireless messages to modify the operational condition and/or the programming of the particular device.

For example in some exemplary arrangements, the user may be able to communicate from a wireless phone via cellular or WiFi connection to determine that the refrigerator is operating, the temperature therein, the operational status of the compressor or other items. Alternatively and/or in addition, the user may be able to remotely control components of the refrigerator. These may include, for example, the ability to remotely turn on the internal light within the refrigerator and to view the food items currently housed within the refrigerator via one or more electronic cameras positioned therein. This may enable a user, for example, to determine that they need to purchase additional groceries or other items for purposes of an upcoming meal or other activities. Alternatively and/or in addition, in some exemplary embodiments, instructions may be utilized to change the temperature within the refrigerator. This may be done, for example, to chill certain grocery items that may need to be cooled or frozen for certain purposes. Of course these approaches are exemplary.

Likewise the microwave may include interface circuitry which enables the remote monitoring of the condition of the microwave components via a remote wireless device. This may include, for example, determining the periods of past operation and current status of the microwave such as whether it is currently being used to cook items. Alternatively and/or in addition, the remote monitoring capabilities may include determining the programmed status of the controller of the microwave such as the controller being programmed to cook an item housed in the microwave at a set future time or for a particular duration at a particular power level. Alternatively and/or in addition, the remote operational capabilities associated with the microwave circuitry may include the ability to turn on an internal light within the cooking chamber of the microwave and to view via a camera whether an item is contained therein. Further such remote capabilities may also include the ability to remotely change the program parameters so as to initiate cooking at a different time or at a different power level. Likewise exemplary arrangements may include having the wireless interface in operative with the power control circuit to provide the ability to monitor the current status of power draw on auxiliary outlets, the occurrence of alarm conditions, or the current status of other connected devices. It should be understood that such capabilities may be implemented in the controller circuitry or in separate circuitry of the microwave and/or the refrigerator. Further the exemplary arrangements may utilize communications interface capabilities included in circuitry of the controller to facilitate monitoring and operational control of the appliance. Of course these capabilities are exemplary and in other embodiments, other approaches may be used.

In an exemplary embodiment a charging pad **219** (FIG. **14**) may be provided on the microwave oven **2** or other suitable location to receive a smart phone or other chargeable device for purposes of charging the device. For example, a wireless charging pad **219** may be positioned on top **225** of the microwave oven **2** for recharging the smart phone or other device. The charging pad **219** may be built into the top **225** of the microwave oven **2** or may be a separate component that is mounted to the top **225** of the microwave oven **2** or other location. The exemplary charging pad **219** includes an inductive charging pad and includes a recessed area **220** for receiving an item to be charged such as the smart phone. The control circuitry may include or be in operative connection with a wireless interface **221** configured for communicating with the remote control device **217** for controlling the microwave or refrigerator and work in conjunction with the control circuitry to perform functions such as removing the supply of electrical power to the microwave oven **2** and/or refrigerator **3**. In an exemplary arrangement, USB ports **223**, **224** may be provided in the area of the charging pad **219**. Alternatively, or in addition, power outlets may be provided in proximity to the charging pad **219**. Alternatively, the charging pad **219** may be provided on the front, side, rear or bottom of the microwave oven **2**, or at another suitable location in connection with the combined appliance structure.

The exemplary charging pad **219** may utilize inductive or wireless charging, which uses an electromagnetic field to transfer energy between the charging pad **219** and the device being charged. In general, the charging pad **219** may include a primary inductive coil **402** (FIG. **28**) in connection with circuitry that is operative to create an alternating electromagnetic field that is received by a secondary inductive coil **404** (FIG. **28**) connected to the circuitry of the device being charged such as device **217**. Power from the electromagnetic field is converted back into electric current to charge a battery **406** (FIG. **28**) in the device. FIG. **28** shows an exemplary arrangement in which the charging pad **219** utilizes inductive charging to charge the device **217**. In this arrangement, the charging pad **219** includes an inductive charging station **408** and the primary inductive coil **402**. The power source **5** provides electrical power to the inductive charging station **408** and the other components of the charging pad **219**.

The inductive charging station **408** is provided for inductively charging the device **217** and may be built into or

otherwise attached to the charging pad **219**. The inductive charging station **408** may include the primary inductive coil **402** that is connected to the power source **5** for the microwave oven **2**. The recessed area **220** may define a cover of the charging pad **219** that covers the primary inductive coil **402** and provide a surface on which the remote device **217** may be placed for charging. The inductive charging station **408** may also include one or more capacitors coupled in series and/or parallel with the primary inductive coil **402** to form an LC circuit. The inductance value of the primary inductive coil **402** and the capacitance value of the capacitor or capacitors may be selected to achieve a desired resonant frequency which corresponds to a frequency of a coil and circuitry in the device being charged, but it should be noted that this exemplary arrangement is not limited to any particular inductance and/or capacitance values and/or any particular power source ratings.

The device **217** or other device to be charged may include the battery **406** that provides electrical power to the components and circuitry of the device. The battery **406** may comprise a rechargeable battery or batteries including lead acid, nickel cadmium (NiCad), nickel metal hydride (NiMHi), lithium ion (Li-ion) or lithium ion polymer (Li-ion polymer) batteries. The device may include any number of batteries, the size and rating of which may vary. The battery **406** may also comprise power conduits, connectors, receptacles, battery connectors, or power cables coupled with batteries.

The device **217** or other device to be charged may include an inductive charger **410** for charging the battery **406** when the device **217** is placed on or in the vicinity of the inductive charging station **408** of the charging pad **219**. The inductive charger **410** may be built into or otherwise attached to the device to be charged. As schematically represented in FIG. **28**, the inductive charger **410** may include the secondary inductive coil **404** and a charging circuit **412** that is connected to the battery **406**. The inductance value of the secondary inductive coil **404** may be selected to correspond or complement the inductance value of the primary inductive coil **402**, but it should be noted that in exemplary arrangements the secondary inductive coil is not limited to any particular inductance value. Likewise, the power rating of the charging circuit **412** may be selected to match or complement the rating of the battery **406**. The two inductive coils **402**, **404** in proximity combine to operate in a manner similar to the principles employed in an electrical transformer. Further in some embodiments greater distances between primary and secondary inductive coils and/or more effective charging can be achieved when the inductive charging system uses resonant inductive coupling. Of course the described approaches are exemplary and in other embodiments other approaches may be used. In some exemplary embodiments the charging pad may be in operative connection with the control circuitry that controls power availability to components of the device. For example, the control circuitry may operate in accordance with its programmed instructions to cause power to not be available to the charging pad when the microwave draws cooking power.

Alternatively or in addition the control circuitry may be operative to cause power not to be available to the charging pad responsive to power draw by the refrigerator compressor, the auxiliary outlets or other items, and/or cumulative power draw of multiple items.

As seen in FIGS. **16**, **18**, and **20**, a safety sensor which is alternatively referred to herein as a safety circuit **226** such as a smoke or gas sensor may be provided in connection with the microwave oven **2**. The smoke sensor **226** operates in connection with exemplary control circuitry to turn off the microwave oven upon sensing smoke or polluted air indicative of a potentially dangerous condition such as excessive smoke generated from overcooked food. The exemplary safety sensor **226** may be powered on or otherwise operational when the microwave oven is in operation. The sensor circuitry may operate responsive to processor executable instructions to determine the optimal activation point. The exemplary smoke sensor may be battery-powered or powered by the house current that powers the combined appliance with an optional battery backup when the power from the house current is out. The smoke sensor may include an ionization smoke sensor that uses a radioisotope, typically Americium-**241**, to ionize air. The ionization smoke sensor circuitry operates to turn off power to the magnetron cooking element of the microwave oven upon sensing a difference due to smoke indicative of a potentially dangerous condition. The smoke sensor alternatively may include a radiation type smoke detector that may contain a source emitter of infrared, visible, or ultraviolet light (typically an incandescent light bulb or light-emitting diode), a lens, and a photoelectric or other type of radiation sensing receiver (typically a photodiode) and suitable control circuitry.

An exemplary sensor **226** may include an alcohol sensor that is coupled with a thermistor **228**. An exemplary alcohol sensor **226** may operate in a set temperature range, such as from 32 to 104 degrees Fahrenheit. When a set level of heating is sensed by the thermistor **228**, the thermistor **228** through suitable control circuitry causes the alcohol sensor **226** to turn on and become operational and check for properties of the gas within the interior area of the microwave.

If the exemplary alcohol sensor **226** is operational due to the sensing of the set level of heating and senses polluted air that is indicative of a dangerous condition, a shutdown signal is outputted by the alcohol sensor to the controller **104**. Upon receiving the shutdown signal, the controller **104** determines that the radiation cooking emitting element of the microwave oven **2** should be shut down and causes the magnetron of the microwave to shut down through the withdrawal of electrical power. If (after the alcohol sensor is caused to be turned on by the thermistor) the alcohol sensor **226** senses air that is not indicative of a dangerous condition such as the air produced by normal cooking of food in the microwave oven **2**, the alcohol sensor circuitry will not send a shutdown signal to the controller **104** and the controller allows the microwave cooking activity to continue.

Alternatively or in addition, a fault indicator **230** may be coupled to the control circuitry of the controller **104** or other circuitry to indicate that there is a dangerous condition upon detection by the alcohol sensor **226**. For example, the fault indicator **230** may be a buzzer that is activated in response to the alcohol sensor **226** sensing polluted air indicative of a dangerous condition. In another example, fault indicator **230** may include the display **124** displaying a fault message such as "E-1" in response to the alcohol sensor **226** detecting polluted air indicative of a dangerous condition. Alternatively the fault indicator may output one or more signals, such as wireless alarm signals that can be detected by a receiver of an alarm system or through a remove device such as a smart phone.

An exemplary embodiment may include a combination of fault indicators. For example, upon the alcohol sensor **226** sensing air that is indicative of a dangerous condition, a shutdown signal is outputted by the alcohol sensor **226** to the controller **104**. Upon receiving the shutdown signal, the controller **104** determines that the microwave oven **2** should

be shut down and causes the radiation emitting cooking element of microwave oven **2** to be shut down. In addition in an exemplary embodiment, a buzzer is activated and the display **124** displays a fault message such as "E-1" in response to the alcohol sensor **226** sensing polluted air indicative of a dangerous condition.

The alcohol sensor **226** may be reset automatically responsive to the alcohol sensor **226** no longer detecting gas indicative of the dangerous condition. Alternatively or in addition, the alcohol sensor **226** may be reset upon sensing by a suitable switch, opening of the microwave door **9** of the microwave oven **2**. The display may display a "bar" or other suitable icon to indicate that the alcohol sensor **226** is turned on. Other types of suitable safety sensors may also be used instead of the alcohol sensor to detect a dangerous condition within the cooking area of the microwave.

In addition to one or more sensors which detect the gases generated from cooked food, the sensor **226** may include a temperature sensing capability such as, for example, using the thermistor **228** and related elements mentioned above.

Referring to FIG. **24**, in another exemplary embodiment, the safety sensor which is alternatively referred to as a safety circuit may comprise an infrared sensor **326**. The infrared sensor **326** may include two oppositely positioned infra-red disposed infrared sensor elements in the form of a sensor emitter **328** and sensor receiver **330** (schematically shown in FIG. **24**) provided on the microwave oven and located in the microwave's cavity **332**. The exemplary infrared sensor **326** operates as follows. The sensor emitter **328** emits radiation and the sensor receiver **330** senses sensor radiation from the sensor emitter **328** while the microwave element operates during a cooking session. When smoke that is indicative of a dangerous condition passes in between the infrared sensor elements **328**, **330**, a determination is made by the safety circuit that a transmission amount of sensor radiation from the sensor emitter reaching the sensor receiver has fallen by at least a programmed threshold amount during the cooking session, due to smoke in the cooking interior area. Responsive to the determination, the cooking element of the microwave oven is caused by the safety circuit to be no longer supplied with electrical power. The exemplary safety circuit may use the smoke point of oil or similar food products as the basis for its threshold amount, so that normal smoke emitted during the cooking or heating of food or beverages will not cause the infrared sensor **326** to deactivate cooking operation. The exemplary infrared sensor **326** would not require interaction from the microwave user. The exemplary safety sensor may be operative to cause an initial transmissivity level of sensor radiation that reaches the sensor receiver from the sensor emitter early in the cooking session to be stored in a data store or other memory associated with the safety circuit. The determination of a level of smoke corresponding to a dangerous condition is made in this embodiment responsive to circuitry operating in accordance with programmed instructions to detect that the transmission amount of sensor radiation reaching the sensor receiver has dropped by the threshold amount from the initial transmissivity level during the cooking session.

Referring to FIG. **25**, in another exemplary embodiment, the safety sensor or safety circuit may comprise a light sensor **334**, which detects the increase smoke density within the microwave's cooking area which is alternatively referred to as a cavity. The light sensor **334** may also include a sensor emitter and sensor receiver. The light sensor **334** may be provided in the microwave cavity **332** and may operate as follows. At the beginning of a cooking cycle, the light generated travels through the clean air to the light sensor **334**. As smoke increases in density, the amount of light that reaches the sensor receiver is reduced. The circuitry of light sensor **334** includes a programmed trip point or threshold that corresponds to the reduced amount of light sensed caused by the amount of smoke, that is indicative of a dangerous condition. When the trip point is reached, the safety circuit causes the electrical power to the radiation emitting cooking element to be withdrawn. A circuit determination would be made based on the amount of smoke that corresponds to the trip point and its corresponding light sensor reading.

Referring to FIG. **26**, in another exemplary embodiment, the safety sensor may include an optical motion sensor **336**. The optical motion sensor **336** may also include a sensor emitter and sensor receiver. The optical motion sensor **336** may be positioned in the microwave cavity **332** adjacent air exhaust vents **338**, **340** of the microwave, which comprises an air passage that connects an area where food is cooked in the microwave oven to the air outside the housing of the microwave oven. The optical motion sensor **336** detects motion which is sensed due to the presence of smoke blown by an exhaust fan **342** of the microwave oven **2** through the air passage. The exhaust fan **342** is operative to cause air to move in the air passage connected to the microwave cavity. In an exemplary arrangement, the sensor emitter and sensor receiver are positioned to be operative to sense the transmission of radiation between the emitter and the receiver in the air passage. The optical motion sensor **336** has a trip point or threshold that corresponds to the presence of smoke of a predetermined density that corresponds to a reduced level of transmission that is indicative of a dangerous condition. When the trip point is reached, the optical motion sensor causes the cooking element of the microwave oven to be turned off. It should be noted that the exemplary optical motion sensor is not be positioned within the microwave cavity and directed toward a turntable therein, since the turntable itself may result in false alarms in some configurations. Of course it should be understood that other types of smoke sensors may be positioned in air passages in other alternative embodiments.

Alternative embodiments may include other types of smoke sensors. For example, some embodiments may include sensors that are operative to detect smoke by determining the level of volatile organic compounds (VOCs) in the air in the microwave oven cooking area. In some exemplary embodiments such VOC sensors may be positioned to sense air in at least a portion of the microwave cooking area. In some cases such VOC sensors may be positioned in an air passage that extends between the microwave cooking area and the air in the atmosphere outside the microwave. Such an arrangement may have an advantage in that positioning the sensor in the air passage may minimize the amount of cooking splatter and other contamination from the food cooked in the microwave oven that reaches the sensor.

Some exemplary arrangements may include a VOC sensor that comprises a tin dioxide semiconductor gas sensor. In some arrangements the semiconductor is formed on an alumina substrate with a thick film heater of ruthenium oxide on the reverse side. Of course this configuration is exemplary and in other embodiments other arrangements and VOC sensor types may be used.

In exemplary microwave oven arrangements VOC sensors may be operated in conjunction with suitable control circuitry to detect conditions which correspond to a dangerous smoke condition. Such a dangerous smoke condition is determined responsive to the level of VOCs, such as carbon

dioxide and/or carbon monoxide in the air in the cooking area of the microwave oven. Such compounds may generally indicate the presence of combustion which is corresponds to a potentially dangerous condition. Responsive to detecting a threshold VOC concentration in the air of the cooking area, the control circuitry in operative connection with the sensor is operative to cause power to be withdrawn from the magnetron of the microwave oven so as to prematurely end a current cooking session before the set and time thereof. In exemplary arrangements, the sensitivity of the VOC sensors is sufficient to detect a developing potentially dangerous condition and cause power to be withdrawn from the microwave cooking element before a fire or other condition causes damage to the microwave oven. This enables the sensor circuitry to reset when the dangerous smoke condition is no longer detected and enable the microwave oven to operate in a subsequent cooking session.

In some exemplary arrangements multiple sensors in operative connection with detection circuitry is utilized to determine the activation point for an alarm condition based on detection of parameters such as humidity, temperature, temperature rate of change, and gas constituents generated during cooking phases. Combinations of absolute and relative values and rates of change thereof may be detected for purposes of evaluating possible alarm conditions. Other types of sensors that may be used in exemplary embodiments include flame sensors. Flame sensors are operative, detect and provide signals indicative of the presence of a flame or fire. Upon the flame sensor detecting the presence of a flame, the flame sensor causes the controller to discontinue electrical power to the microwave oven cooking element. In some arrangements the flame sensor may take the form of an optical flame sensor. The flame sensor may be of the type that utilizes ionization current flame detection. Alternatively, the flame sensor may be of the type that utilizes thermocouple flame detection.

Alternatively or in addition, the fault indicator **230** may be coupled to the controller **104** or other circuitry to indicate that there is a dangerous condition upon detection of a potentially dangerous condition by any of the infrared sensor **326**, light sensor **334**, optical motion sensor **336**, or flame or fire sensor in the embodiments described above. For example, the fault indicator **230** may be a buzzer that is activated in response to the safety sensor **226** sensing polluted air indicative of a dangerous condition. In another example, fault indicator **230** may include the display **124** displaying a fault message such as "E-1" in response to the safety sensor **226** detecting polluted air indicative of a dangerous condition.

Exemplary embodiments may include a combination of fault indicators. For example, upon the trip point or threshold value being reached by any of the detection circuitry of the infrared sensor **326**, light sensor **334**, or optical motion sensor **336**, a shutdown signal is outputted by the sensor **226** to the controller circuitry **104**. Upon receiving the shutdown signal, the controller **104** determines that the microwave oven **2** should be shut down and causes electricity to be withdrawn from the cooking element. In addition, a buzzer is activated and the display **124** displays a fault message such as "E-1" in response to the sensor **226** sensing polluted air indicative of a dangerous condition. In other exemplary embodiments, the controller or other circuitry may be operative to output signals that can be communicated to a remote location, indicative of an alarm condition that is detected through one or more detection circuits of the microwave oven or other connected devices. This may include, for example, the circuitry dispatching messages to a remote device such as a smart phone of a user. The messages caused to be dispatched responsive to operation of the control circuitry may be indicative of an alarm condition that can be output on the display of the user's device to advise that a potentially dangerous condition exists. Alternatively and/or in addition, the control circuitry may be operative to communicate messages to a central controller or alarm panel located in the facility or institution in which the microwave is operated. For example the circuitry may be operative to provide wireless communication to an alarm panel or central monitoring station which receives the information that there is a potentially dangerous condition at the microwave device located in a particular location, dormitory room or other identified area of the building or facility. In still other exemplary arrangements, messages corresponding to alarm conditions that are cause to be sent by the control circuitry of exemplary arrangements may be dispatched to devices or alarm monitoring stations of a security force for an oversight authority within the area in which the microwave is operated. Of course it should be understood that these approaches are exemplary and in other embodiments, other approaches may be used.

The exemplary detection circuitry of the smoke sensor, infrared sensor **326**, light sensor **334**, or optical motion sensor **336**, may be reset automatically upon the sensor not detecting gas or other conditions that are no longer indicative of the dangerous condition. Alternatively or in addition, the sensor may be reset upon circuitry sensing opening of the microwave door **9** of the microwave oven **2**. The display may display a "bar" or other suitable icon to indicate that the sensor is turned on. Other types of suitable safety sensors and circuitry may also be used to detect dangerous conditions. Further in other exemplary embodiments, other circuitry may be in operative connection with the combined appliance or separate components so as to address dangerous conditions. Such items may include, for example, a suitable fire extinguishing system that may be automatically triggered in response to detecting conditions corresponding to fire or smoke within the cooking chamber of the microwave oven. For example in some exemplary arrangements, a compressed supply of carbon dioxide may be included with or be positioned adjacent to the combined appliance. A suitable gas conduit and control valve may be positioned to deliver the carbon dioxide into the cooking chamber of the microwave oven responsive to the detection of flame, excessive temperature or smoke within the microwave cooking chamber. Suitable circuitry in operative connection with the controller or circuitry of the temperature, smoke or flame detection devices may operate to cause the control valve for the delivery of the carbon dioxide or other fire extinguishing material to be opened to cause the delivery thereof responsive to the detection of one or more of the alarm conditions. Further as can be appreciated, in some exemplary arrangements, the control circuitry may operate in accordance with its programmed instructions to require that the alarm condition be detected as existing for a programmed period of time before the control circuitry operates to cause the fire extinguishing material to be delivered into the cooking chamber. Further although exemplary arrangements may include carbon dioxide as the fire extinguishing material, in other embodiments other types of fire extinguishing or fire suppressing materials may be utilized. These may include, for example, chemical fire extinguishing or retarding materials in the form of powders or foams. Alternatively, and/or in addition, fire suppressing materials may include the

delivery of nonflammable gaseous material. Of course these approaches are exemplary and in other embodiments, other approaches may be used.

As shown in FIGS. **15**, **16** and **27**, the exemplary front control panel **22** of the microwave oven **2** may include Universal Serial Bus (USB) ports **232**, **234** for connection, communication, and power supply between the front control panel **22** and electronic devices such as a personal computer, cell phone, Smart Phone, Ipod®, Ipad®, or other suitable device to allow communication and/or charging of the electronic device plugged into the USB ports. In one exemplary embodiment, a first USB port **232** may be provided on the upper portion **236** of the front control panel **22**, and a second USB port **234** may be provided on the lower portion **238** of the front control panel **22** above the auxiliary outlets **111**, **112** and between the reset buttons **113**, **114** as seen in FIG. **15**. The first USB port **232** may be operatively connected to a three ampere fuse and a linear time-variant system (LVT) of 100 mA, 120 volts, and 12 watts. The second USB port **234** may be operatively connected to a linear time-variant system (LVT) of 200 mA, 120 volts, and 24 watts. The second USB port **234** may also be reset. The current sensor **118** may be constructed to limit the second USB port and the two auxiliary outlets to 12 amps. The USB ports **232**, **234** may be in operative connection with respective printed circuit boards. Alternatively, as represented in FIG. **27**, instead of auxiliary outlet **111**, another USB port **237** may be provided on the front panel **22** at the location of the auxiliary outlet **111**. Alternatively or in addition, one or more USB ports may be provided on the rear of the microwave oven, the sides of the microwave oven, and/or the top or bottom of the microwave oven. Alternatively or in addition, one or more auxiliary outlets may be provided on the rear of the microwave oven, the sides of the microwave oven, and/or the top or bottom of the microwave oven. Alternatively, the refrigerator outlet may be provided on the top, bottom, or one of the sides of the microwave oven.

FIGS. **17** and **18** show another exemplary arrangement of a control panel and control circuitry that includes USB ports **232**, **234**. In this arrangement, the first and second USB ports **232**, **234** are located side by side on the lower portion **238** of the front control panel **22** above the auxiliary outlets **111**, **112**. The USB ports **232**, **234** are also located rightwardly (as viewed in FIG. **17**) adjacent a status LED indicator and reset button **240**. In this exemplary arrangement, current sensor **218** is configured to monitor the combined current in the USB ports **232**, **234** and the auxiliary outlets **111** and **112**. The current sensor **218** is constructed to limit the combined current in the USB ports and auxiliary outlets **111** and **112**, to 12 amperes. The LED indicator and reset button **240** may be controlled to illuminate when power to the auxiliary outlets **111**, **112** and the USB ports **232**, **234** is available and flash when disabled. In another embodiment, the LED indicator and reset button **240** may be controlled to be off when power to the auxiliary outlets **111**, **112** and the USB ports **232**, **234** is available and light on illuminate or flash when disabled. In an exemplary arrangement, depressing the LED indicator and reset button **240** enables power delivery from the auxiliary outlets **111**, **112** and the USB ports **232**, **234** so that power may be again supplied from them after a power interruption due to excessive power draw, when the combined current draw falls from above to below the limit. Of course it should also be understood that in exemplary arrangements, the controller or other control circuitry that operates to avoid excessive power draw may also operate to discontinue delivery of power from the receptacles and the USB ports in circumstances where the power draw of the microwave cooking element and/or the refrigerator compressor requires the power delivery from the auxiliary outlets and USB ports be discontinued. In such exemplary arrangements, the control circuitry may operate to automatically resume the delivery of power to such receptacles and ports or in other embodiments, or a manual input may be required to cause the delivery of power to be reinstituted. Of course it should be understood that these approaches are exemplary and in other embodiments other approaches may be used.

FIGS. **19** and **20** show an alternative arrangement in which one USB port **234** is located above the auxiliary outlets **111**, **112** and rightwardly adjacent the status LED indicator and reset button **240**. In this exemplary arrangement, the current sensor **218** is configured to monitor the combined current draw from the USB port **234** and auxiliary outlets **111** and **112**. The current sensor **218** is configured to limit the combined current draw from the USB port **234** and auxiliary outlets **111** and **112**, to 12 amperes. Alternatively, the current sensor **218** may be configured to limit the combined current in the USB port **234** and the auxiliary outlets **111** and **112** to 13 amperes. The LED indicator and reset button **240** may be controlled to illuminate when power to the auxiliary outlets **111**, **112** and the USB port **234** is available, and flash when the control circuitry causes the outlets and ports to be disabled. In another exemplary embodiment, the LED indicator and reset button **240** may be off when power to the auxiliary outlets **111**, **112** and the USB port **234** is available, and illuminate or flash when disabled. In an exemplary arrangement, depressing the LED indicator and reset button **240** enables operation of the auxiliary outlets **111**, **112** and the USB port **234** so that power may be again supplied from them after the controller discontinues the supply of power thereto when the combined current draw falls from above to below the limit. Of course as is the case with the previously described embodiment, the controller and other circuitry may be operative to also discontinue the supply of electrical power to the auxiliary receptacles and/or USB ports when power draw is required for the magnetron of the microwave or the refrigerator compressor is sensed that power delivery to other devices needs to be discontinued to limit excessive power draw. In such circumstances, the discontinuance of power to the auxiliary receptacles and USB ports may be automatically reinstated responsive to operation of the controller. Alternatively, in other arrangements, manual inputs may be required from a user to reinstitute the electrical delivery therefrom. Further in some exemplary arrangements, the controller may be configured so as to require manual inputs to reinstate electrical delivery only under circumstances where excessive power draw above the limits from the one or more auxiliary outlets or USB ports has occurred, thus requiring a manual input to reinstitute the electrical power delivery therefrom. Of course these approaches are exemplary and in other embodiments other approaches may be used. Other elements of the embodiments of FIGS. **17-20** may be similar in structure and function as the embodiments shown in FIGS. **1-11**. Thus, the same reference numbers are used in describing these exemplary embodiments to indicate elements that are similar to elements or components in the embodiments shown in FIGS. **1-11**.

FIG. **21** shows the rear portion **244** of the exemplary microwave oven of the embodiments shown in FIGS. **12-20**. Refrigerator outlet **15** is shown on and accessible from the rear portion **244** of the microwave oven and is associated with the LED indicator and reset button **214**, which is also provided on the rear portion **244** of the microwave oven.

FIG. **22** is a similar view as FIG. **21** except that an AC electrical cord **8** for the microwave oven is shown.

In the embodiments shown in FIGS. **12-22**, control models for control logic may be established for execution of executable instructions by the controller or microprocessor which is also referred to herein as at least one control circuit **4**. These models can be in the form of processor executable instructions stored in a computer readable medium, such as software or firmware within the control circuit **104**. The exemplary models and logic flow are, in the first instance, dependent on the state of operation of the microwave oven **2**. The current demands of the microwave oven **2** are generally the most significant contribution to overload. To avoid overload conditions, in exemplary arrangements power to the low power receptacles or auxiliary outlets, refrigerator receptacle, and/or USB ports is disabled during microwave operation.

FIG. **23** shows a flow chart illustrating several control models for operational scenarios. The control circuit **104** begins by determining whether the microwave oven is turned on or operating (e.g. cooking) in step **246**. When the microwave oven is turned on and operating to perform cooking, the rear refrigerator outlet **15**, the two auxiliary outlets **111**, **112** on the front control panel **22**, and the two USB ports **232**, **234** on the front control panel are all turned off or disabled, so that the total draw of current for the combination microwave and refrigerator is not over 15 amperes as indicated in step **248**.

When the microwave oven is not drawing cooking power and items are plugged into the two USB ports **232**, **234**, two auxiliary outlets **111**, **112**, and rear refrigerator outlet **15**, then the exemplary control circuit **104** determines whether the refrigerator outlet **15** is drawing less than 2 amperes (approximately the average amperes when the refrigerator compressor is running) in step **250**. If the refrigerator outlet **15** is drawing less than 2 amperes, then all the outlets **15**, **111**, **112** and USB ports **232**, **234** are caused to be enabled, so that power may be supplied through them as indicated in step **252**. If the refrigerator outlet **15** not drawing less than 2 amperes, the control circuit **104** determines whether the refrigerator outlet **15** is drawing less than 14 amperes in step **254**. If the refrigerator outlet **15** is drawing less than 14 amperes but not less than or greater than or equal to 2 amperes, then the auxiliary outlets **111**, **112** and USB ports **232**, **234** are disabled or turned off so that no power may be supplied from them as indicated in step **256**. The refrigerator outlet **15** remains enabled. If the refrigerator outlet **15** is not drawing less than 14 amperes or drawing greater than or equal to 14 amperes, then the refrigerator outlet **15** is disabled in step **258**. This may be accomplished by tripping the relay **20** of the reset circuit off. In addition, the red LED light on the LED indicator and reset button **214** is turned on to identify the disabled condition of the refrigerator. Then, in step **260**, the auxiliary outlets **111**, **112** and USB ports **232**, **234** are enabled so that power may be supplied through them.

Then, the exemplary control circuit determines whether the refrigerator outlet **15** is drawing less than 14 amperes in step **262**. If the refrigerator outlet **15** is not drawing less than 14 amperes or drawing greater than or equal to 14 amperes, then the refrigerator outlet **15** remains disabled and the red LED light on the LED indicator and reset button **214** remains turned on to identify the disabled condition of the refrigerator **3**. This condition may occur, for example, if an electrical heater is plugged into what is normally used as the refrigerator electrical supply outlet **15**. When the refrigerator outlet **15** draws less than 14 amperes resulting from the overload condition being eliminated, the refrigerator outlet **15** will be enabled by the control circuit so that power may supplied to the refrigerator outlet **15** upon the LED indicator and reset button **214** being depressed as indicated in step **264**. Depression of the LED indicator and reset button **214** in this condition will also turn off the red LED light. The process then ends. It should be noted that the at least one control circuit **104** can make the determination in steps at the same time or in a different order.

It should be understood that in exemplary embodiments, determination as to the power draw from receptacles that have been disabled, may be determined through a process of again supplying power output through the receptacle. The power draw from the receptacle is monitored continuously after the power is restored and if it is detected that the power draw exceeds a threshold or other determined amount, power is discontinued to the receptacle. In some exemplary arrangements, the power sensing circuitry may operate in conjunction with the controller to calculate the current power draw level. The control circuitry may also operate in accordance with its programming to determine that other connected devices are consuming power which may necessitate not providing power to the receptacle so as to avoid an overload condition. Alternatively or in addition, the control circuitry may be operative to monitor other conditions that may be indicative of a problem when the power is restored to a receptacle, port or other control outlet. For example, responsive to a manual input to reinstitute the supply of power thereto, the control circuitry may operate to recognize conditions that correspond to an electrical short or other malfunction which necessitates an immediate withdrawal of electrical power thereto. This may include, for example, monitoring the rate at which power is drawn and the current flow increases to detect a short or other fault condition. Numerous different types of detection circuitry and control approaches may be implemented in order to help assure that if power output has been discontinued, that excessive power draw or undesirable conditions are not a problem when power is reinstated.

Although exemplary embodiments are described herein as used in conjunction with vapor compression refrigerators, embodiments employing the principles described herein may also be used with other types of refrigerators. Such refrigerators may include refrigerators that use thermoelectric cooling, such as Peltier elements to provide cooling. Other embodiments may include absorption refrigerators to provide cooling. In such embodiments the components of the refrigerator apparatus which draw electrical power, are controlled through operation of at least one control circuit, to prevent, suspend or defer the operation thereof at times when the microwave radiation emitting cooking element of other components that draw electrical power are to be operated, so as to avoid exceeding a maximum threshold for current draw for the combined appliance that is permitted by the at least one control circuit.

It should be understood that the above description is only illustrative of the exemplary embodiments. Various alternatives and modifications can be devised by those skilled in the art without departing from the teachings of exemplary embodiments. Accordingly, the present application is intended to embrace all such alternatives, modifications and variances which fall with the scope of the appended claims.

Thus the exemplary systems, arrangements, and methods of operation that have been described herein achieve desirable capabilities, eliminate difficulties encountered in the use of prior devices and systems and attain the useful results described herein.

In the foregoing description, certain terms have been used in describing exemplary embodiments for purposes of brevity, clarity and understanding. However, no unnecessary limitations are to be implied therefrom because such terms are used for descriptive purposes and are intended to be broadly construed. Moreover, the descriptions and illustrations herein are by way of examples and the inventive features are not limited to the particular features shown and described.

Further it should be understood that elements, features, relationships, devices and other aspects described in connection with one exemplary embodiment may be utilized in connection with other exemplary embodiments such that numerous different arrangements, functions and capabilities may be carried out. Numerous different aspects of described embodiments may be used together or in different combinations to achieve useful results.

Having described the features, discoveries and principles of the exemplary embodiments, the manner in which they are constructed and operated, and the advantages and useful results attained, the new and useful structures, devices, elements, arrangements, parts, combinations, systems, equipment, operations, methods, processes and relationships are set forth in the appended claims.

We claim:

**1**. Apparatus comprising:

a microwave oven,

wherein the microwave oven includes:

a radiation emitting microwave element,

a microwave housing, wherein the microwave housing bounds a cooking interior area, wherein the radiation emitting microwave element is operative to irradiate the cooking interior area,

wherein an air passage extends between the cooking interior area and an exterior of the housing,

at least one power control circuit, wherein the at least one power control circuit is operative to cause

electrical power to be selectively delivered to the microwave element,

wherein the microwave oven further includes at least one sensor emitter and at least one sensor receiver configured to receive radiation from the at least one sensor emitter, wherein the at least one sensor emitter and the at least one sensor receiver extend in the air passage such that air from at least a portion of the cooking interior area extends intermediate of the at least one sensor emitter and the at least one sensor receiver,

at least one safety circuit, wherein the at least one safety circuit is in operative connection with the at least one sensor emitter, the at least one sensor receiver, and the microwave element,

wherein the at least one safety circuit is operative to cause

the at least one sensor emitter to emit sensor radiation and the at least one sensor receiver to sense sensor radiation from the at least one sensor emitter while the microwave element operates during a current cooking session,

data to be stored in a memory associated with the at least one safety circuit corresponding to an initial transmissivity level of transmitted radiation from the at least one sensor emitter that reaches the at least one sensor receiver early in the current cooking session,

comparison of a current level of transmitted radiation during the current cooking session that reaches the at least one sensor receiver, and the initial transmissivity level,

a determination based on the stored data that the current level of transmitted radiation from the at least one sensor emitter that reaches the at least one sensor receiver has fallen by at least a threshold amount from the initial transmissivity level during the current cooking session, due to smoke in the cooking interior area,

responsive at least in part to the determination, the microwave element to no longer be supplied with electrical power to prematurely end the current cooking session,

wherein the at least one safety circuit is configured to reset after the premature end of the current cooking session responsive to the at least one sensor circuit, so that the at least one sensor circuit is operative to cause the radiation emitting microwave element to be allowed to be supplied with electrical power during a next subsequent cooking session.

**2**. The apparatus according to claim **1**

wherein the microwave oven housing includes a fan, wherein the fan is operative to cause air from the cooking interior area to move through the air passage.

**3**. The apparatus according to claim **1** and further including

a power supply outlet, wherein the power supply outlet is provided on the microwave oven,

wherein the power supply outlet is configured to receive an electrical connection to an appliance having lower power requirements than power requirements of the microwave oven,

wherein the at least one power control circuit is operative to cause

electrical power to be selectively delivered to the microwave element and the power supply outlet, wherein the power supply outlet does not operate to supply power therefrom when the microwave element draws cooking power.

**4**. The apparatus according to claim **1** and further comprising:

a power supply outlet provided on the microwave oven wherein the power supply outlet is in operative connection with the at least one power control circuit,

a refrigerator configured to be connected to the power supply outlet,

wherein the refrigerator includes a refrigerator housing, wherein the refrigerator housing bounds a cooled refrigerator interior area, wherein the refrigerator housing is in a fixed operative connection with the microwave housing, wherein the refrigerator includes a refrigerant compressor, wherein the refrigerant compressor is operative to compress refrigerant material, wherein the refrigerant is operative to cause cooling of the cooled refrigerator interior area,

wherein the at least one power control circuit is configured to:

disable refrigerator operation by not supplying electrical power to the compressor when the microwave element draws cooking power;

enable refrigeration operation by supplying electrical power to the compressor when the microwave element does not draw cooking power.

**5**. The apparatus according to claim **4**

wherein the microwave oven includes a USB port, wherein the USB port is in operative connection with the at least one power control circuit,

wherein the USB port is not operative when the microwave element draws cooking power.

**6**. The apparatus according to claim **4**

wherein the microwave oven includes an inductance charging pad, wherein the inductance charging pad is in operative connection with the at least one power control circuit,

wherein the inductance charging pad is not operative when the microwave element draws cooking power.

**7**. The apparatus according to claim **4** and further including

a wireless interface, wherein the wireless interface is in operative connection with the at least one power control circuit,

wherein the wireless interface is operative to transmit signals indicative of a condition of at least one of the microwave oven and the refrigerator, to a wireless mobile device.

**8**. The apparatus according to claim **4** and further including

a temperature sensor, wherein the temperature sensor is operative to sense a temperature corresponding to temperature in the cooking interior area,

wherein the temperature sensor is in operative connection with the at least one safety circuit,

wherein the at least one power control circuit is operative to cause the microwave element to no longer be supplied with cooking power to prematurely end the current cooking session responsive at least in part to the determination, and

the temperature being sensed above a temperature level during the current cooking session.

**9**. Apparatus comprising:

a microwave oven configured to be connected to a source of electrical power and having a control circuit, wherein the control circuit is configured to control operation of the microwave oven;

a smoke sensor, wherein the smoke sensor is positioned in an air passage that extends between a cooking area inside the microwave oven and air outside the microwave oven, wherein the smoke sensor is in operative connection with the control circuit, wherein the smoke sensor is configured to cause cooking power to the microwave oven to be withdrawn prior to a set end time of a current cooking session upon the smoke sensor sensing smoke indicative of a dangerous condition; and

wherein the smoke sensor is configured to be reset after ending the current cooking session prior to the set end time based on sensing the smoke indicative of the dangerous condition, to enable the microwave oven to receive cooking power in a next subsequent cooking session responsive at least in part to the smoke sensor no longer sensing the smoke indicative of the dangerous condition.

**10**. The apparatus according to claim **9** and further comprising:

a power supply outlet on the microwave oven,

wherein the power supply outlet is in operative connection with the control circuit,

a refrigerator,

wherein the refrigerator is electrically connected with the power supply outlet,

wherein the control circuit is operative to

withdraw electrical power from the refrigerator when the microwave oven draws cooking power,

deliver electrical power to the refrigerator when the microwave oven does not draw cooking power.

**11**. The apparatus according to claim **10**, wherein the smoke sensor includes at least one of

a photosensor,

a motion sensor,

an ionization sensor,

a VOC sensor,

a sensor including a radiation emitter and a radiation receiver.

**12**. The apparatus according to claim **10**

wherein the microwave oven includes a USB port, wherein the USB port is in operative connection with the control circuit,

wherein the control circuit causes the USB port not to be operative when the microwave oven draws cooking power.

**13**. The apparatus according to claim **10**

wherein the microwave oven includes an inductance charging pad,

wherein the inductance charging pad is in operative connection with the control circuit,

wherein the control circuit causes the inductance charging pad not to be operative when the microwave oven draws cooking power.

**14**. The apparatus according to claim **10**

and further including a wireless interface, wherein the wireless interface is in operative connection with the control circuit,

wherein the wireless interface is operative to transmit signals indicative of a condition of at least one of the microwave oven and the refrigerator to a wireless mobile device.

**15**. The apparatus according to claim **10** and further including

a temperature sensor, wherein the temperature sensor is operative to sense a temperature corresponding to temperature in the cooking area,

wherein the temperature sensor is in operative connection with the smoke sensor,

wherein the control circuit is operative to cause cooking power to the microwave oven to be withdrawn prior to the set end time of the current cooking session, responsive to the smoke sensor sensing smoke indicative of the dangerous condition and the temperature being sensed above a temperature level during the cooking session.

**16**. The apparatus according to claim **10**

wherein the smoke sensor includes a sensor emitter and a sensor receiver, wherein the sensor receiver is configured to receive radiation output from the sensor emitter,

a sensor circuit, wherein the sensor circuit is in operative connection with the sensor emitter, the sensor receiver and the control circuit,

wherein the sensor circuit is operative to cause

the sensor emitter to emit radiation and the sensor receiver to sense radiation from the sensor emitter while the microwave oven operates during a current cooking session,

data to be stored in a memory associated with the sensor circuit corresponding to an initial transmissivity level of transmitted radiation from the sensor emitter that reaches the sensor receiver early in the current cooking session,

comparison of a current level of transmitted radiation that reaches the sensor receiver during the current cooking session, and the initial transmissivity level,

a determination based on the stored data, that the current level of transmitted radiation from the sensor emitter that reaches the sensor receiver has fallen by at least a threshold amount from the initial transmissivity level during the current cooking session, wherein the determination corresponds to smoke indicative of the dangerous condition,

wherein cooking power to the microwave oven is withdrawn prior to the set end time of the current cooking session responsive at least in part to the determination.

**17**. Apparatus comprising:

a microwave oven configured to be connected to a source of electrical power and having a control circuit to control operation of the microwave oven, wherein the microwave oven includes an interior cooking area, wherein the microwave oven includes an air passage that extends between the cooking area and outside the microwave oven,

a smoke sensor, wherein the smoke sensor is positioned in the air passage, wherein the smoke sensor is configured to cause cooking power to be withdrawn from the microwave oven prior to a set end time of a current cooking session responsive at least in part to the smoke sensor sensing at least one change in an amount of smoke sensed by the smoke sensor, which at least one change corresponds to a dangerous condition, and

wherein the control circuit is configured to reset after ending the current cooking session prior to the set end time due to sensing the dangerous condition, to enable cooking power to again be available to the microwave oven in a next subsequent cooking session responsive at least in part to the smoke sensor no longer sensing the dangerous condition.

**18**. The apparatus according to claim **17** and further comprising:

a power supply outlet on the microwave oven,

a refrigerator configured to be connected to the source of electrical power by connection to the power supply outlet, wherein the refrigerator includes a compressor,

wherein the control circuit is operative to cause

electrical power to be unavailable to the compressor, when the microwave oven demands cooking power,

electrical power to be available to the compressor when the microwave oven does not demand cooking power.

**19**. The apparatus according to claim **18**, wherein the smoke sensor includes at least one of

a radiation emitter and radiation receiver,

a photosensor,

a motion sensor,

an ionization sensor,

a VOC sensor.

**20**. The apparatus according claim **18**, wherein the microwave oven further includes at least one output device including at least one of

a USB port,

an inductance charging pad,

an auxiliary electrical outlet,

wherein the at least one output device is in operative connection with the control circuit, and wherein the control circuit is operative to cause the at least one output device to be inoperative when the microwave oven demands cooking power.

* * * * *

# EXHIBIT 3

US009791206B1

(12) **United States Patent**
**Hall et al.**

(10) **Patent No.: US 9,791,206 B1**
(45) **Date of Patent: *Oct. 17, 2017**

(54) **MULTIPLE LINKED APPLIANCE WITH AUXILIARY OUTLET**

(71) Applicant: **INTIRION CORPORATION**, Walpole, MA (US)

(72) Inventors: **Gregory Allan Thomas Hall**, Guelph (CA); **Philip Emma**, Topsfield, MA (US)

(73) Assignee: **INTIRION CORPORATION**, Walpole, MA (US)

( * ) Notice: Subject to any disclaimer, the term of this patent is extended or adjusted under 35 U.S.C. 154(b) by 0 days.

This patent is subject to a terminal disclaimer.

(21) Appl. No.: **15/135,873**

(22) Filed: **Apr. 22, 2016**

**Related U.S. Application Data**

(63) Continuation-in-part of application No. 14/262,290, filed on Apr. 25, 2014, which is a continuation-in-part (Continued)

(51) **Int. Cl.**

| | |
|---|---|
| ***H05B 6/50*** | (2006.01) |
| ***H05B 6/64*** | (2006.01) |
| ***H05B 6/66*** | (2006.01) |
| ***F25D 23/12*** | (2006.01) |
| ***H05B 6/68*** | (2006.01) |

(52) **U.S. Cl.**
CPC ..... ***F25D 23/12*** (2013.01); ***H05B 6/666*** (2013.01); ***H05B 6/68*** (2013.01)

(58) **Field of Classification Search**
CPC . H05B 6/68; H05B 6/808; H05B 6/66; H05B 6/645; H05B 6/666; F25D 23/12; F25B 29/00
USPC ..... 219/482, 483, 485, 488, 678, 679, 695, 219/697, 702, 715, 716, 717, 718, 719, 219/720, 721, 722, 723, 756, 761, 707
See application file for complete search history.

(56) **References Cited**

U.S. PATENT DOCUMENTS

4,316,068 A * 2/1982 Tanabe ..... F24C 7/08 219/707
4,582,971 A * 4/1986 Ueda ..... H05B 6/6411 219/707

(Continued)

FOREIGN PATENT DOCUMENTS

JP 5-240447 A 9/1993
JP 2001-33043 A 2/2001

*Primary Examiner* — Hung D Nguyen
(74) *Attorney, Agent, or Firm* — Ralph E. Jocke; Walker & Jocke

(57) **ABSTRACT**

An apparatus includes microwave oven and refrigerator functions. The microwave oven is connected to a source of electrical power and has at least one control circuit for controlling the operation of the microwave oven. A first power supply outlet is provided on the microwave oven. A refrigerator is connected to the source of power by connection to the first power supply outlet. The at least one control circuit is configured to disable the refrigerator compressor, when the microwave oven demands cooking power, and enable the refrigerator compressor when the microwave oven is not drawing cooking power. A safety sensor is provided in the microwave oven and is configured to cause the microwave oven to cease cooking operation upon the safety sensor sensing a dangerous condition.

**12 Claims, 24 Drawing Sheets**

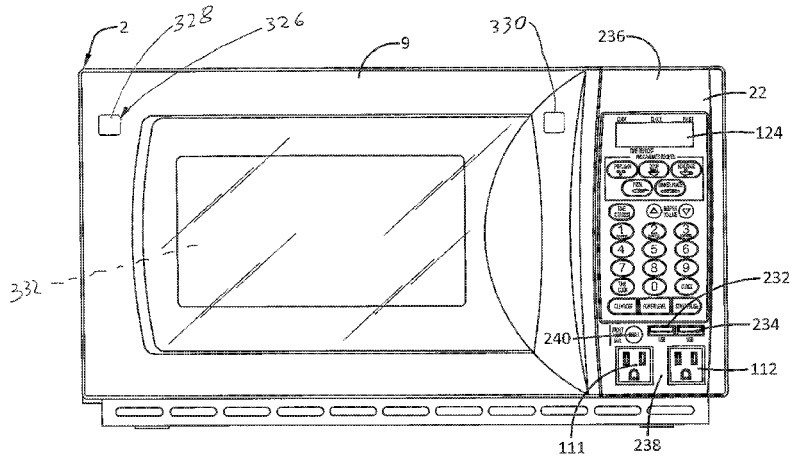

**Related U.S. Application Data**

of application No. 12/317,632, filed on Dec. 23, 2008, now Pat. No. 8,742,304.

(60) Provisional application No. 61/009,419, filed on Dec. 28, 2007.

(56) **References Cited**

U.S. PATENT DOCUMENTS


| | | | | |
|---|---|---|---|---|
| 5,521,359 | A | 5/1996 | Bone | |
| 6,247,246 | B1 | 6/2001 | Scalese | |
| 2001/0052852 | A1 | 12/2001 | Kouznetsov | |
| 2003/0075538 | A1 | 4/2003 | Kish | |
| 2003/0106892 | A1 | 6/2003 | Shon | |
| 2004/0060932 | A1 | 4/2004 | Chun | |
| 2008/0000650 | A1* | 1/2008 | Choi | A62C 3/006 219/679 |
| 2008/0236562 | A1* | 10/2008 | Sager | F24C 7/08 126/273 R |

* cited by examiner

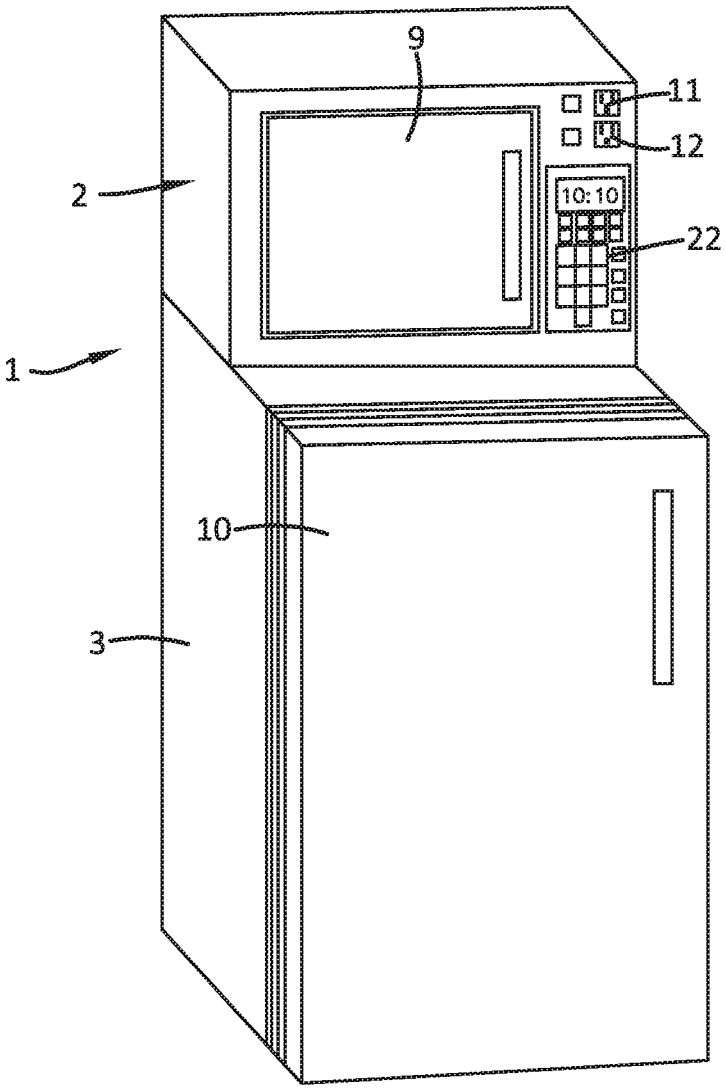


FIGURE 1

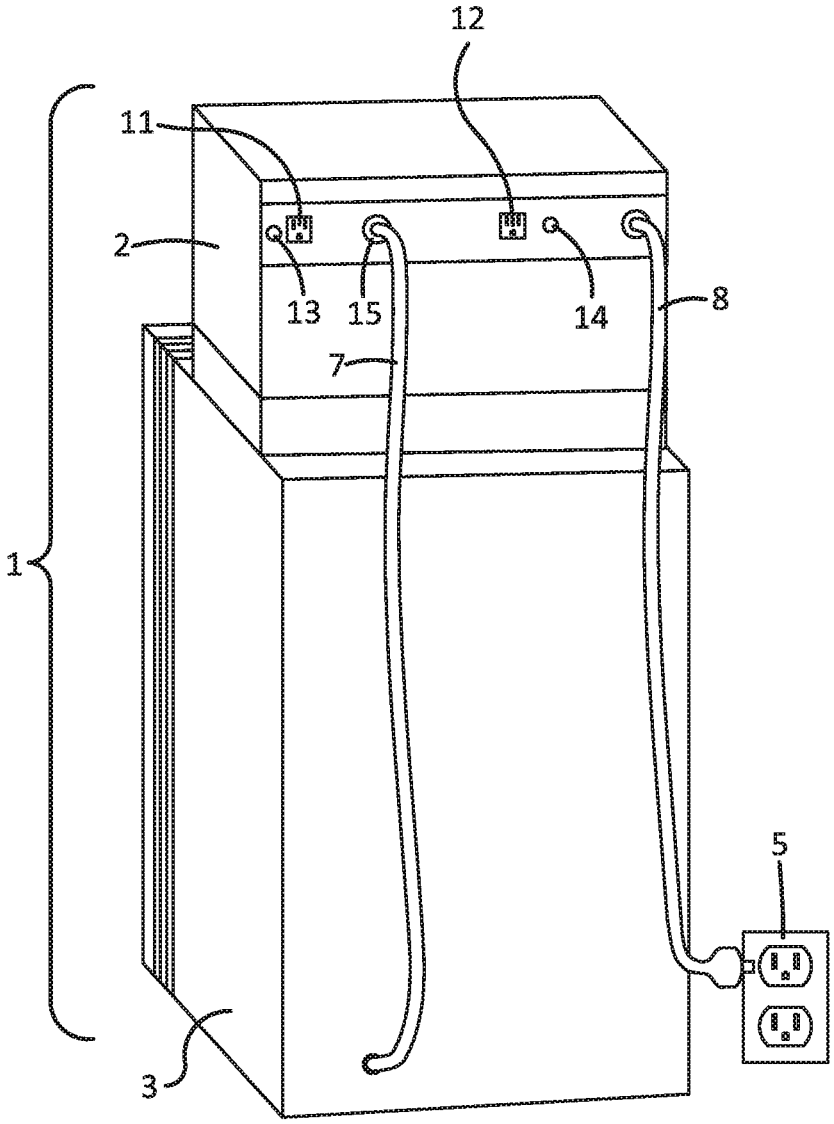


FIGURE 2

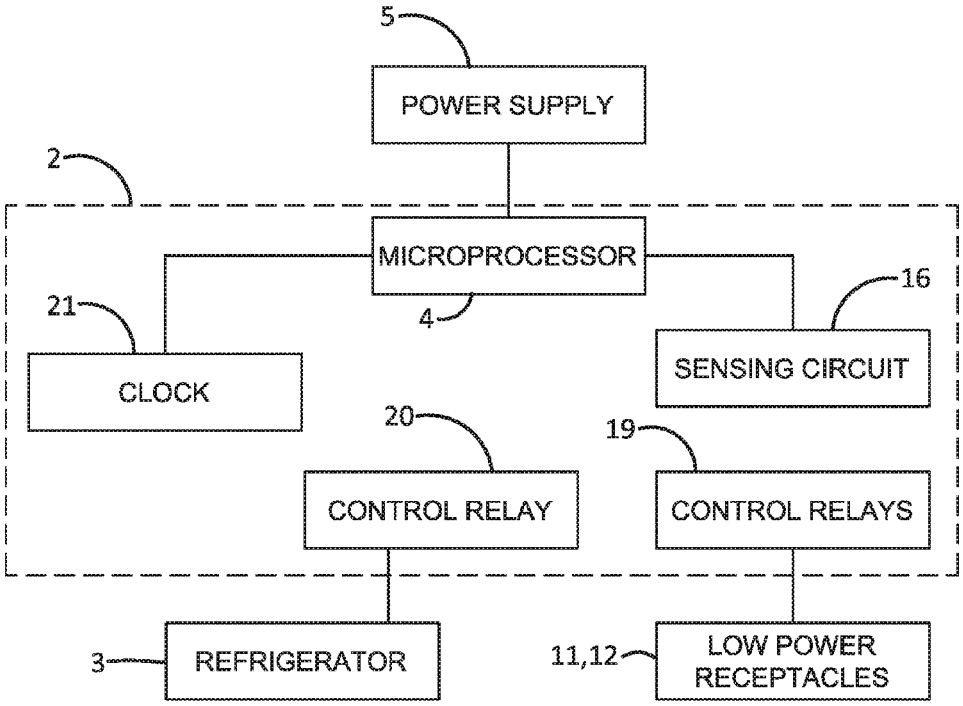
5
POWER SUPPLY
2
MICROPROCESSOR
4
21
CLOCK
16
SENSING CIRCUIT
20
CONTROL RELAY
19
CONTROL RELAYS
3
REFRIGERATOR
11,12
LOW POWER RECEPTACLES

FIGURE 3

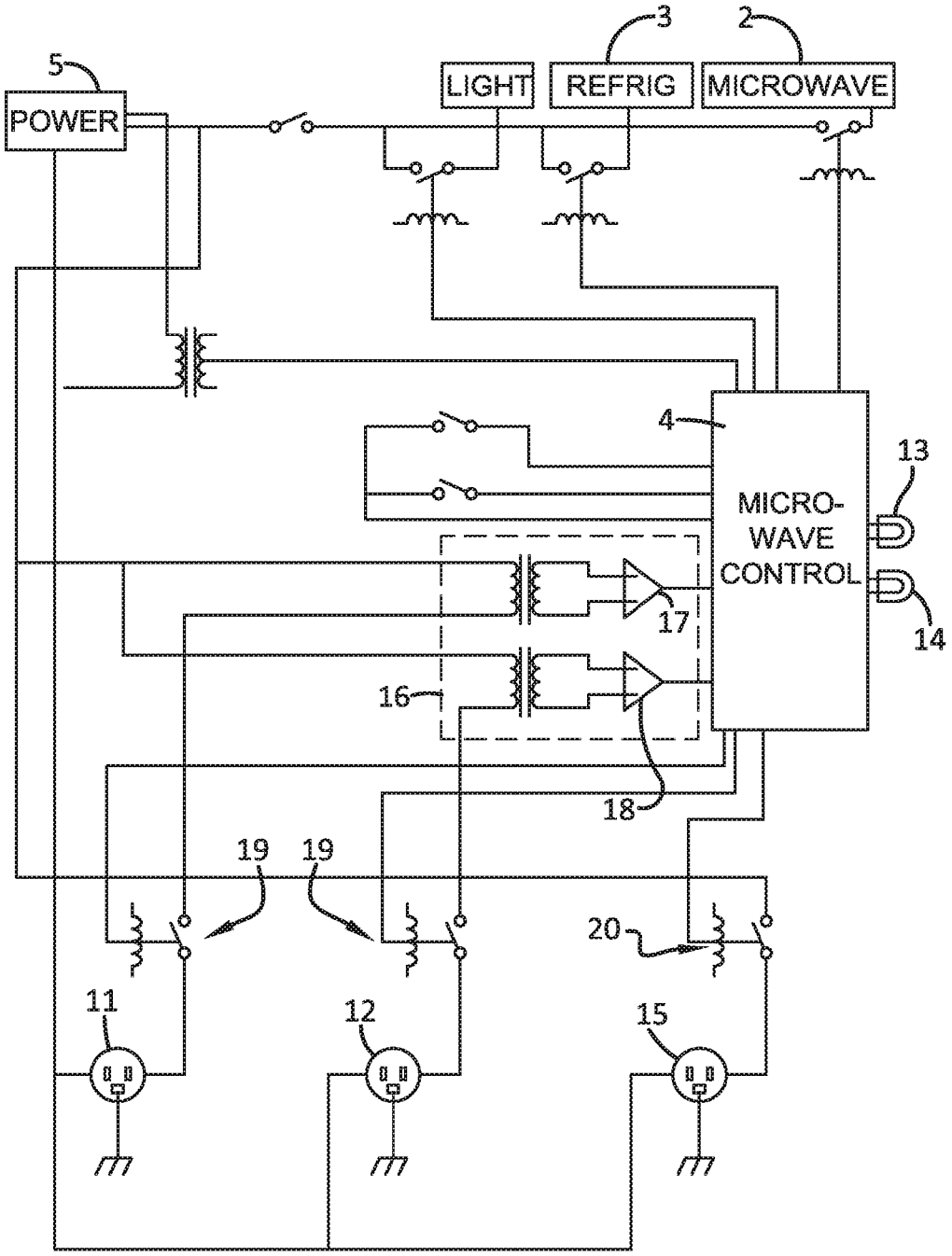
5
POWER
LIGHT
REFRIG
MICROWAVE
3
2
4
MICRO-
WAVE
CONTROL
13
14
17
16
18
19
19
20
11
12
15

FIGURE 4

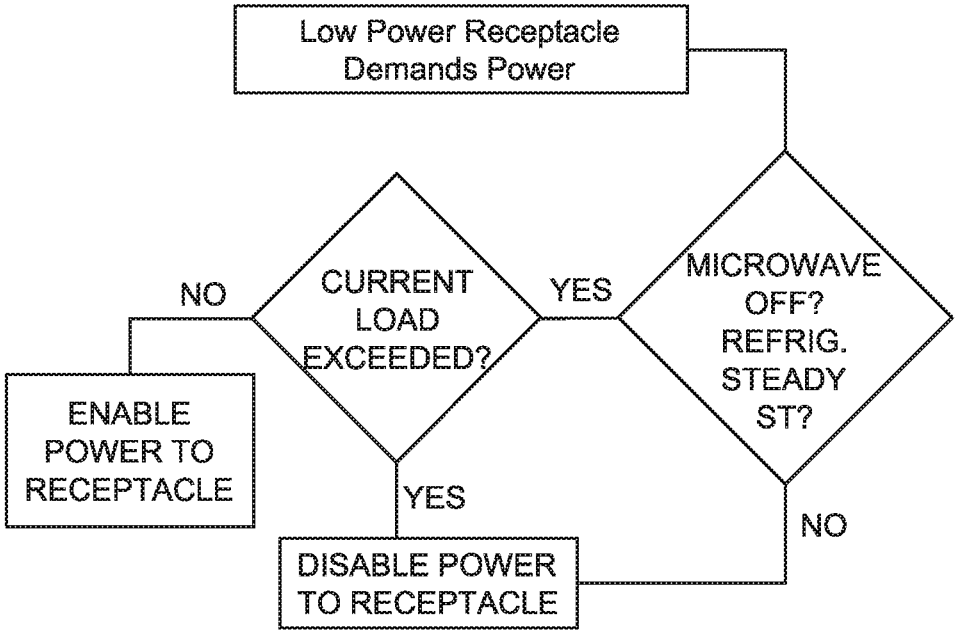


FIGURE 5

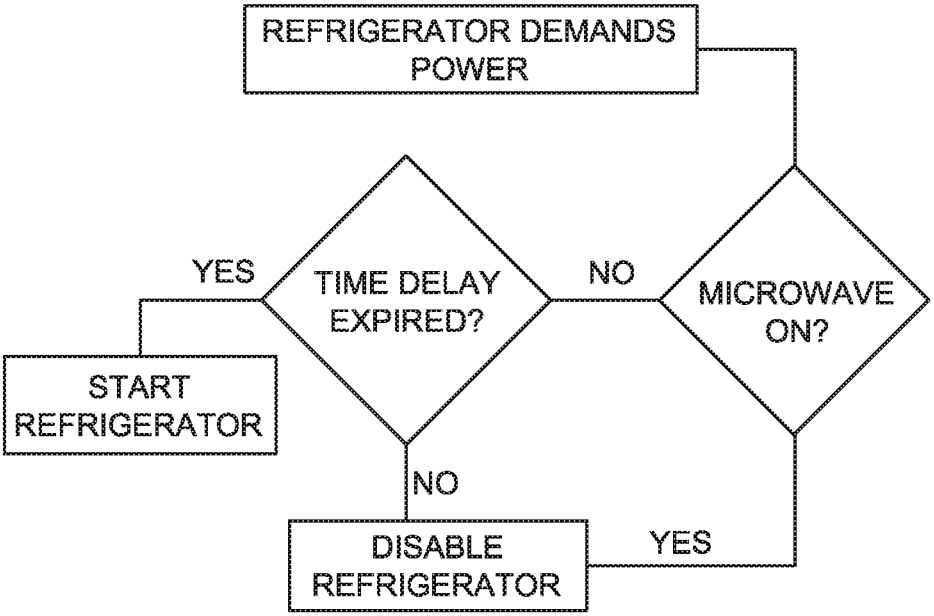


FIGURE 6

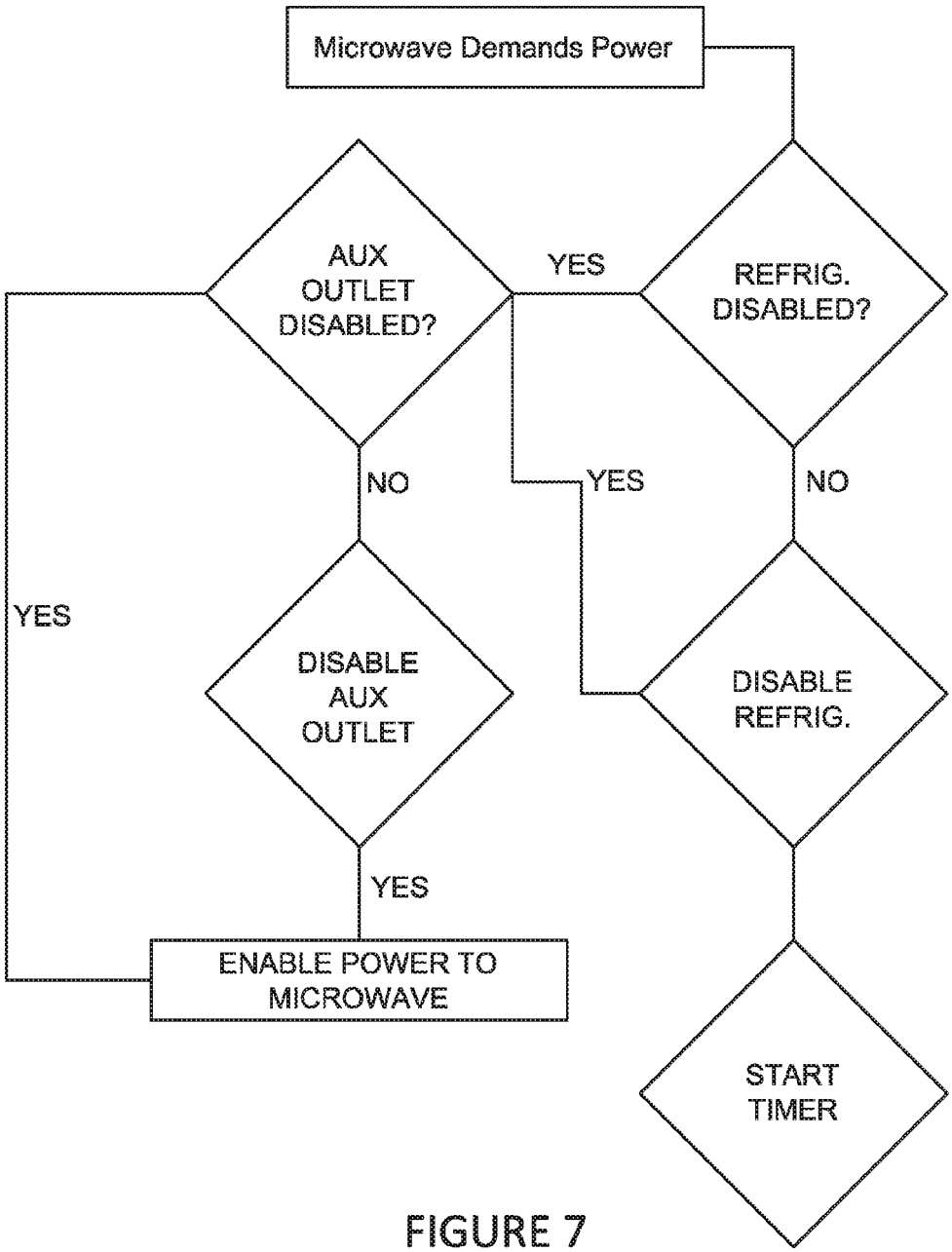
Microwave Demands Power
AUX OUTLET DISABLED?
YES
REFRIG. DISABLED?
NO
YES
NO
YES
DISABLE AUX OUTLET
DISABLE REFRIG.
YES
ENABLE POWER TO MICROWAVE
START TIMER

FIGURE 7

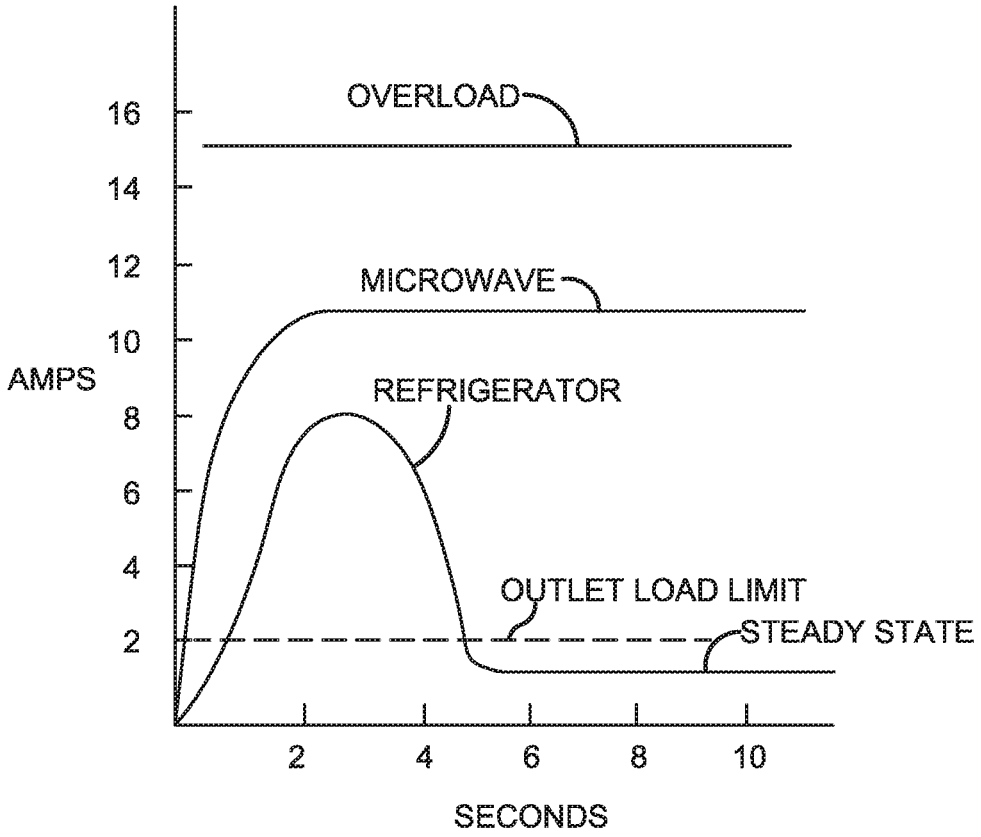
OVERLOAD
MICROWAVE
REFRIGERATOR
OUTLET LOAD LIMIT
STEADY STATE
AMPS
16
14
12
10
8
6
4
2
2
4
6
8
10
SECONDS

FIGURE 8

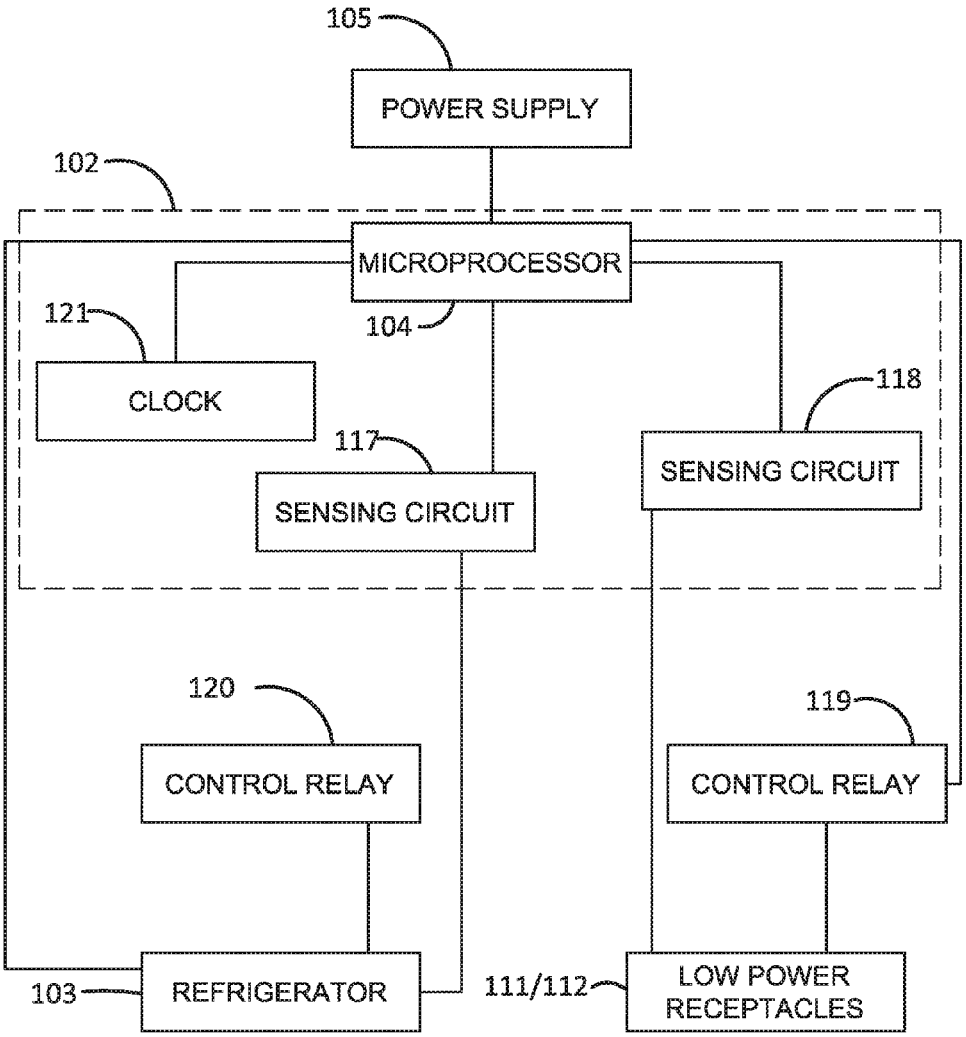
105
POWER SUPPLY
102
MICROPROCESSOR
104
121
CLOCK
117
SENSING CIRCUIT
118
SENSING CIRCUIT
120
CONTROL RELAY
119
CONTROL RELAY
103
REFRIGERATOR
111/112
LOW POWER RECEPTACLES

FIGURE 9

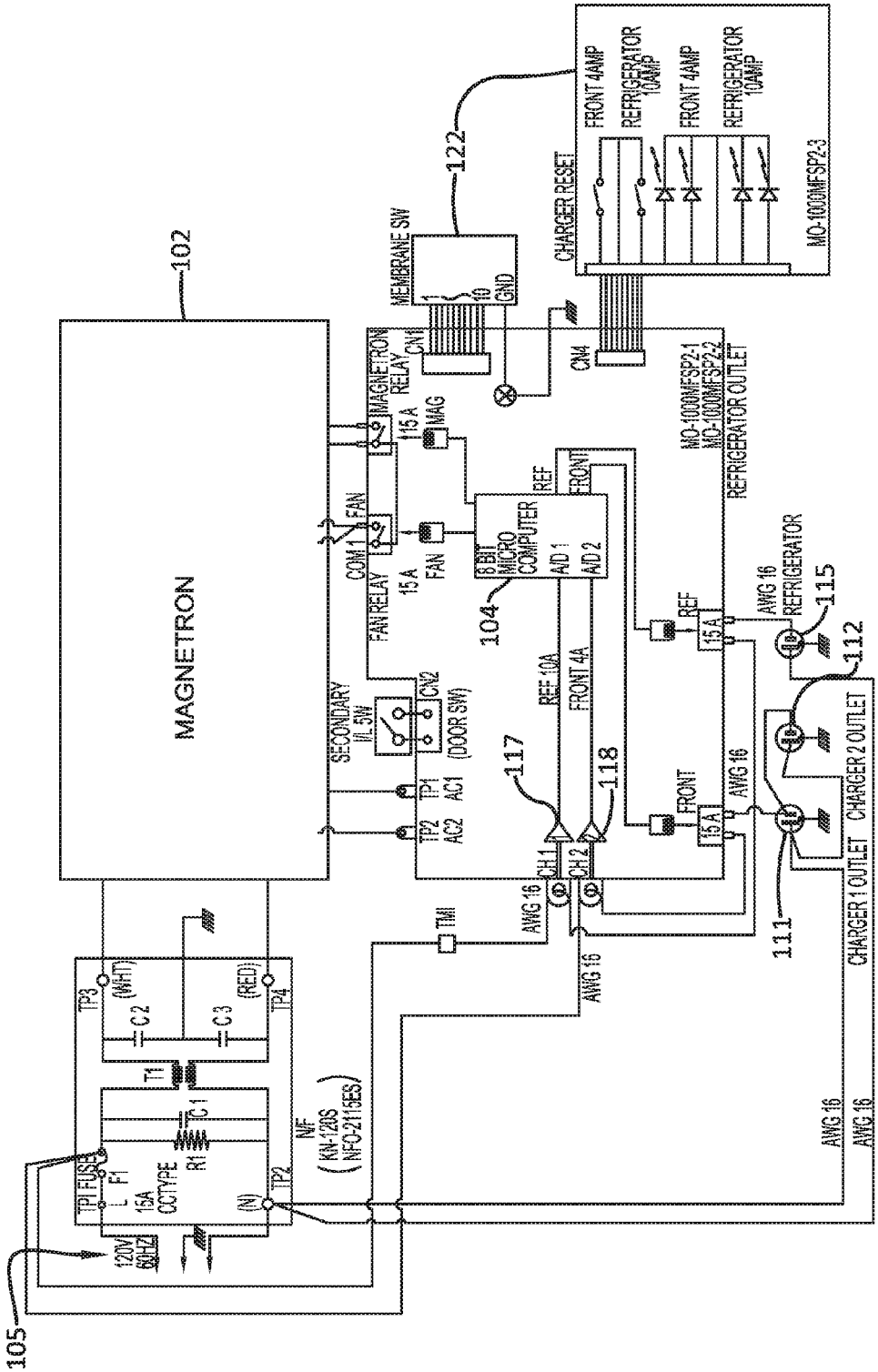
MAGNETRON
102
105
122
104
117
118
111
112
115
MEMBRANE SW
CHARGER RESET
FRONT 4AMP
REFRIGERATOR 10AMP
MO-1000MFSP2-3
MO-1000MFSP2-1
MO-1000MFSP2-2
REFRIGERATOR OUTLET
MAGNETRON RELAY
FAN RELAY
8 BIT MICRO COMPUTER
A/D 1
A/D 2
SECONDARY I/L SW
(DOOR SW)
REF 10A
FRONT 4A
AWG 16
REFRIGERATOR
CHARGER 2 OUTLET
CHARGER 1 OUTLET
TMI
N/F (KN-120S NFO-2115ES)
120V 60HZ
TP1 FUSE
15A CCTYPE
(WHT)
(RED)

FIGURE 10

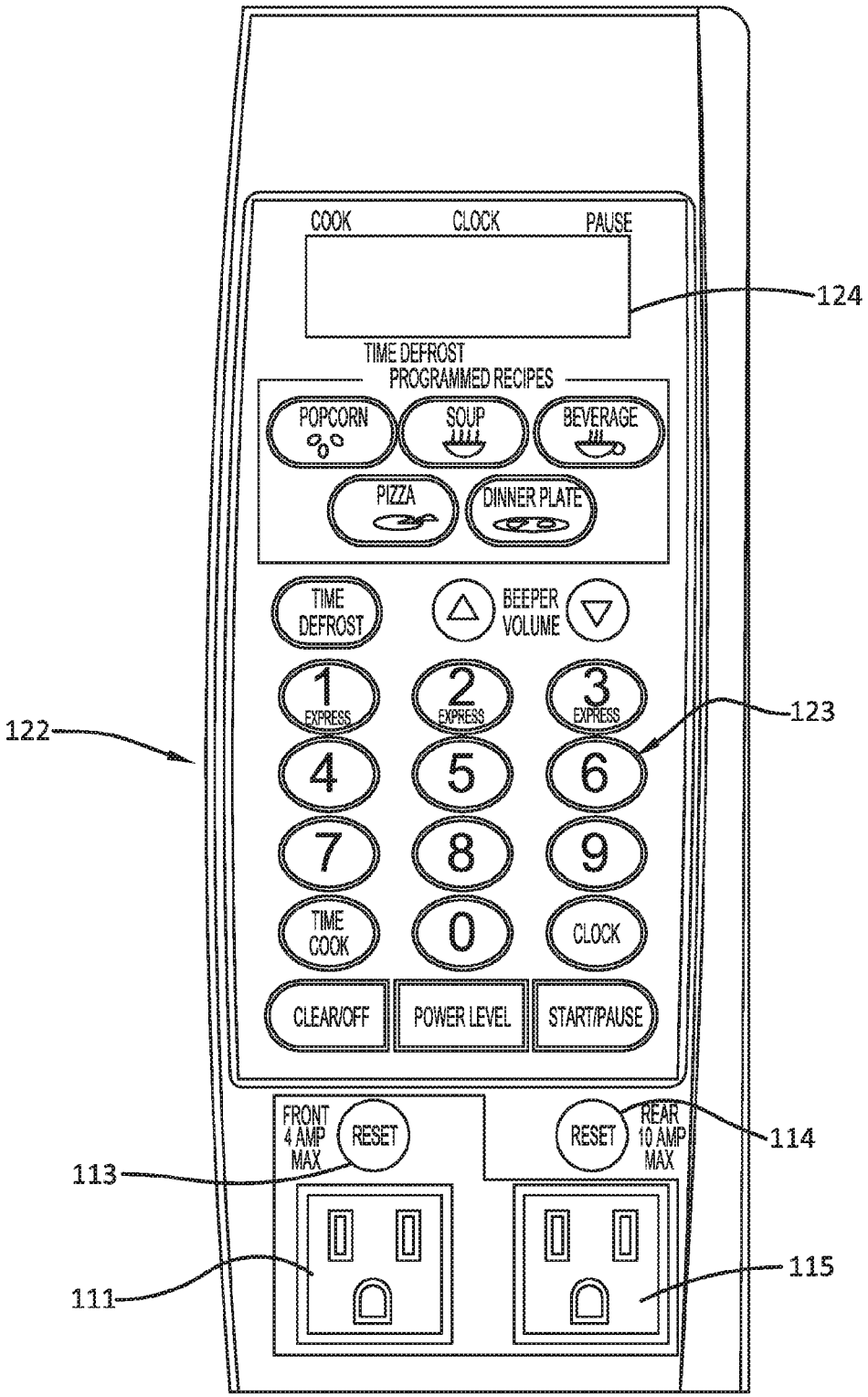
COOK
CLOCK
PAUSE
124
TIME DEFROST
PROGRAMMED RECIPES
POPCORN
SOUP
BEVERAGE
PIZZA
DINNER PLATE
TIME DEFROST
BEEPER VOLUME
1 EXPRESS
2 EXPRESS
3 EXPRESS
122
123
4
5
6
7
8
9
TIME COOK
0
CLOCK
CLEAR/OFF
POWER LEVEL
START/PAUSE
FRONT 4 AMP MAX
RESET
RESET
REAR 10 AMP MAX
114
113
111
115

FIGURE 11

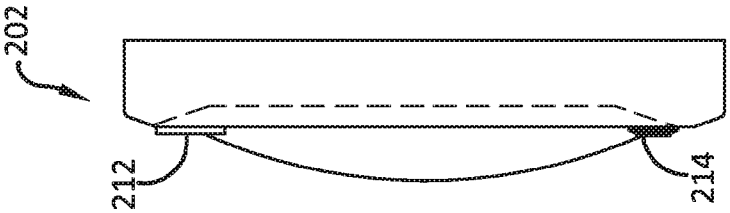


FIGURE 13

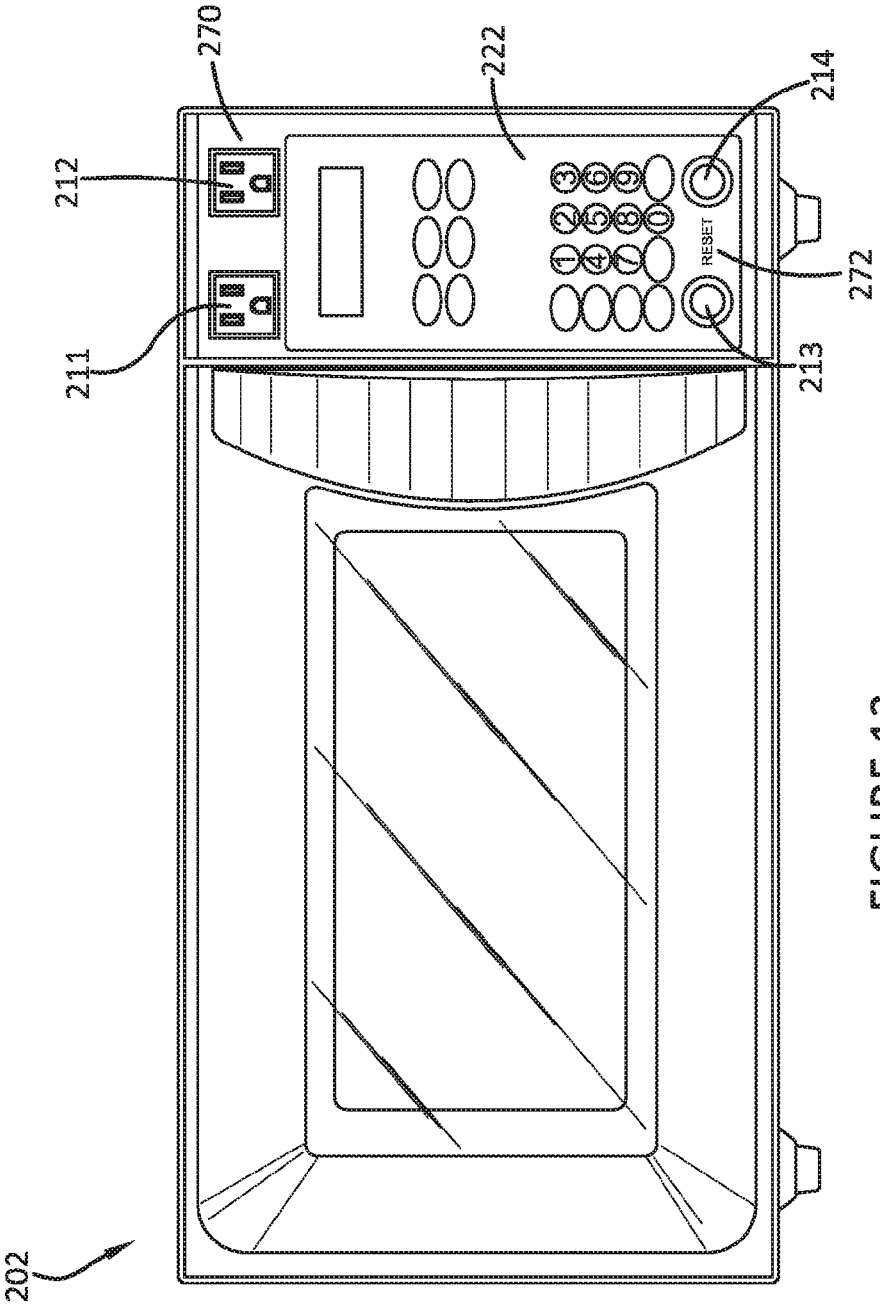


FIGURE 12

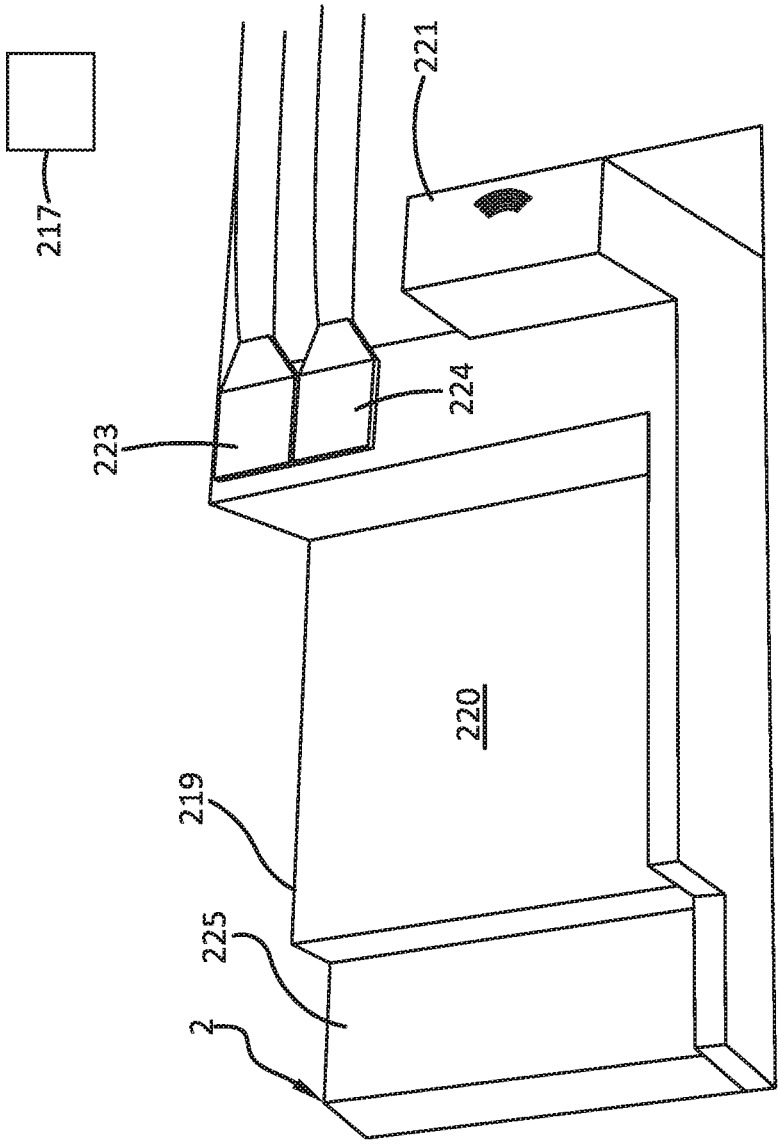


FIGURE 14

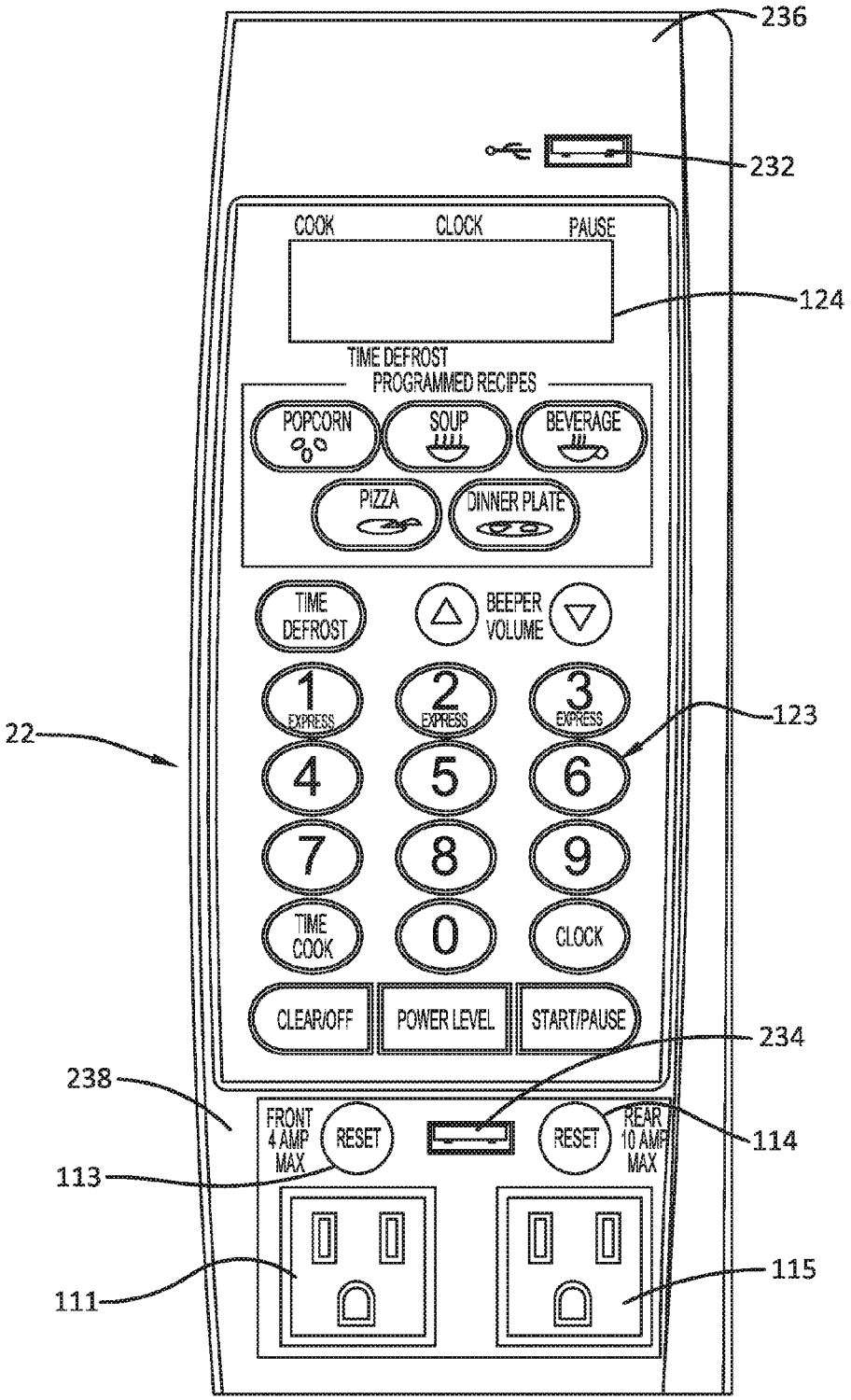
236
232
COOK
CLOCK
PAUSE
124
TIME DEFROST
PROGRAMMED RECIPES
POPCORN
SOUP
BEVERAGE
PIZZA
DINNER PLATE
TIME DEFROST
BEEPER VOLUME
1 EXPRESS
2 EXPRESS
3 EXPRESS
22
123
4
5
6
7
8
9
TIME COOK
0
CLOCK
CLEAR/OFF
POWER LEVEL
START/PAUSE
234
238
FRONT 4 AMP MAX
RESET
RESET
REAR 10 AMP MAX
114
113
111
115

FIGURE 15

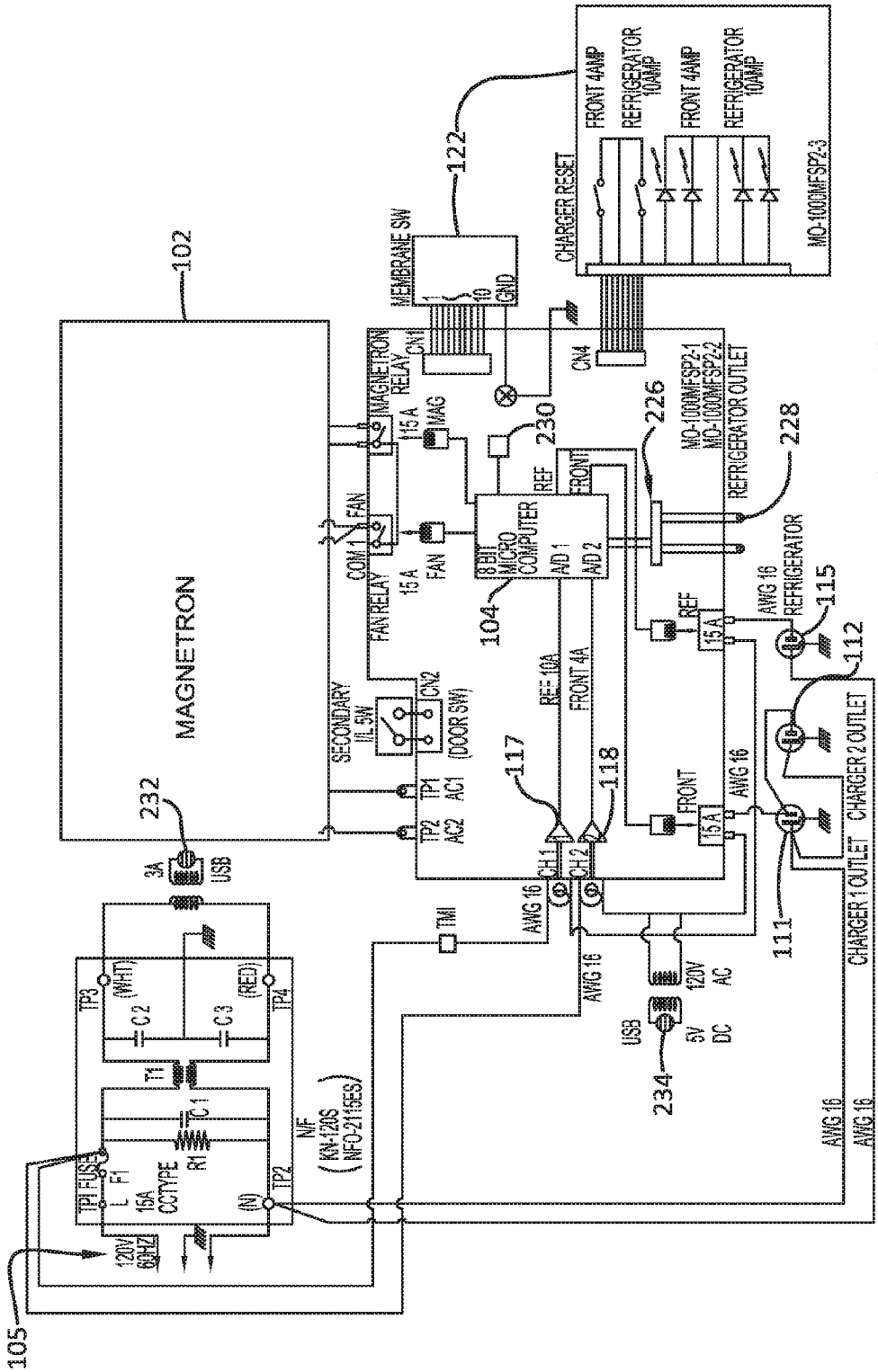
MAGNETRON
102
105
122
MEMBRANE SW
CN1
CN4
CHARGER RESET
FRONT 4AMP
REFRIGERATOR 10AMP
MO-1000MFSP2-3
MAGNETRON RELAY
15 A
MAG
FAN
COM 1
FAN RELAY
8 BIT MICRO COMPUTER
A/D 1
A/D 2
REF
FRONT
230
226
228
MO-1000MFSP2-1
MO-1000MFSP2-2
REFRIGERATOR OUTLET
REFRIGERATOR
AWG 16
115
112
111
CHARGER 2 OUTLET
CHARGER 1 OUTLET
SECONDARY I/L SW
CN2
(DOOR SW)
TP1
AC1
TP2
AC2
117
118
REF 10A
FRONT 4A
CH 1
CH 2
232
3A
USB
TMI
120V
AC
5V
DC
234
TP3
(WHT)
TP4
(RED)
C 2
C 3
T1
C 1
R1
TP1 FUSE
L
F1
15A
CCTYPE
(N)
TP2
N/F
(KN-120S
NFO-2115ES)
120V
60HZ

FIGURE 16

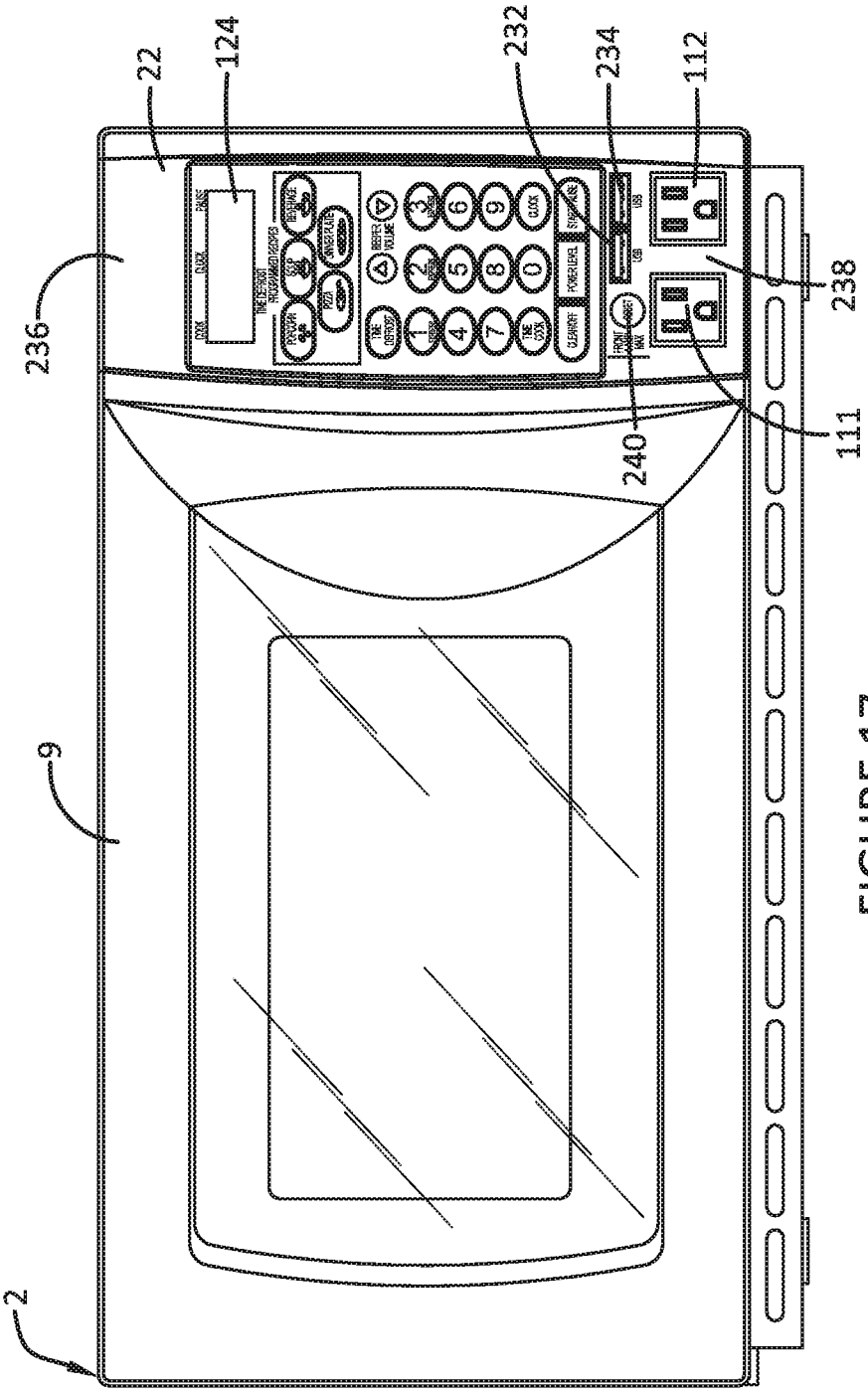


FIGURE 17

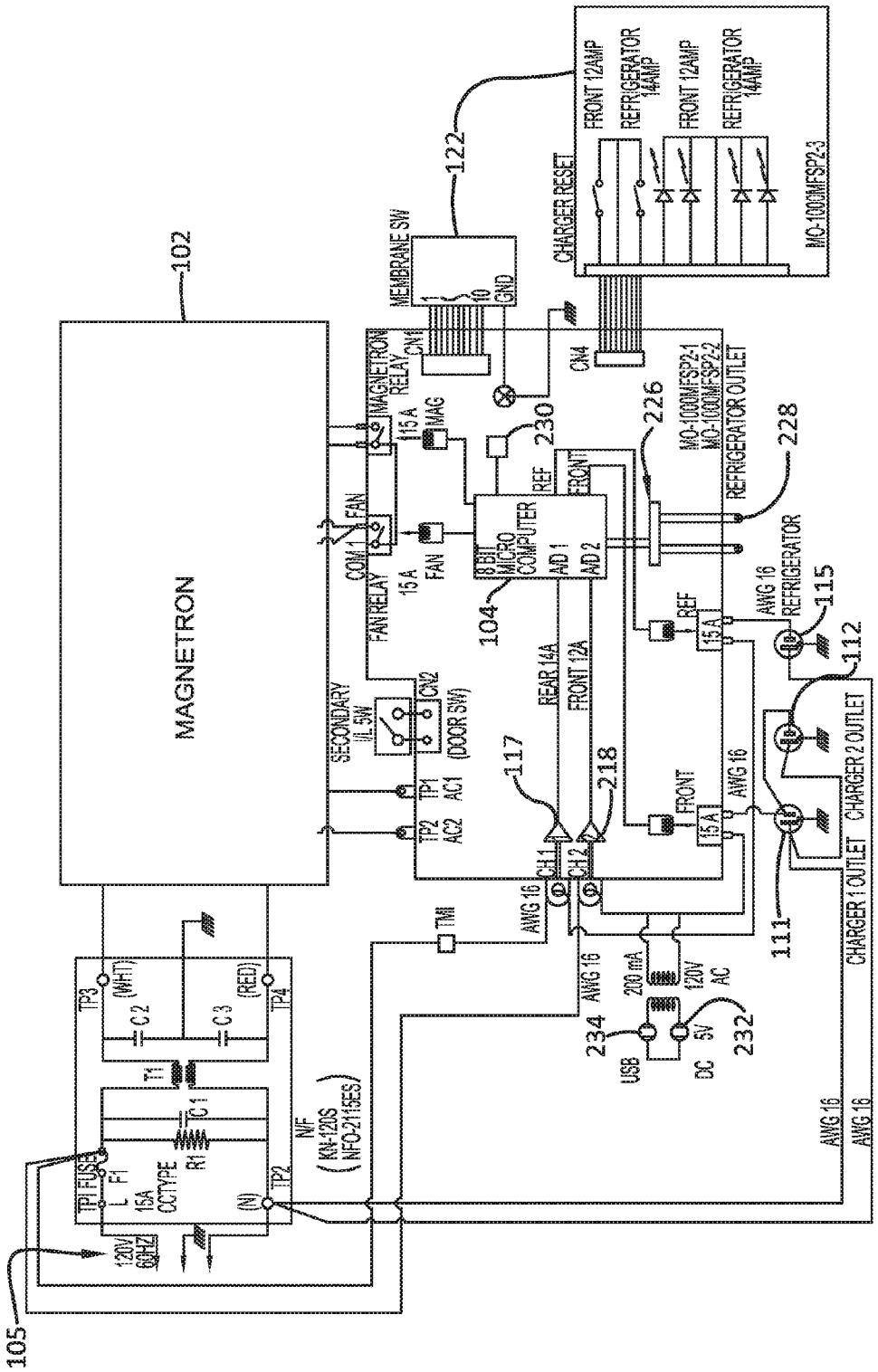
MAGNETRON
102
105
122
MEMBRANE SW
GND
CHARGER RESET
FRONT 12AMP
REFRIGERATOR 14AMP
FRONT 12AMP
REFRIGERATOR 14AMP
MO-1000MFSP2-3
MAGNETRON RELAY
CN1
CN4
MAG
15 A
FAN
COM 1
FAN RELAY
15 A
FAN
8 BIT MICRO COMPUTER
A/D 1
A/D 2
104
230
226
228
MO-1000MFSP2-1
MO-1000MFSP2-2
REFRIGERATOR OUTLET
REF
FRONT
REFRIGERATOR
AWG 16
115
112
111
CHARGER 2 OUTLET
CHARGER 1 OUTLET
REAR 14A
FRONT 12A
SECONDARY I/L SW
CN2
(DOOR SW)
TP1
AC1
TP2
AC2
117
218
CH 1
CH 2
AWG 16
TMI
200 mA
120V AC
234
USB
DC 5V
232
TP3
(WHT)
C 2
C 3
(RED)
TP4
T1
C 1
R1
TP1 FUSE
L F1
15A CCTYPE
(N)
TP2
N/F
(KN-120S NFO-2115ES)
120V 60HZ

FIGURE 18

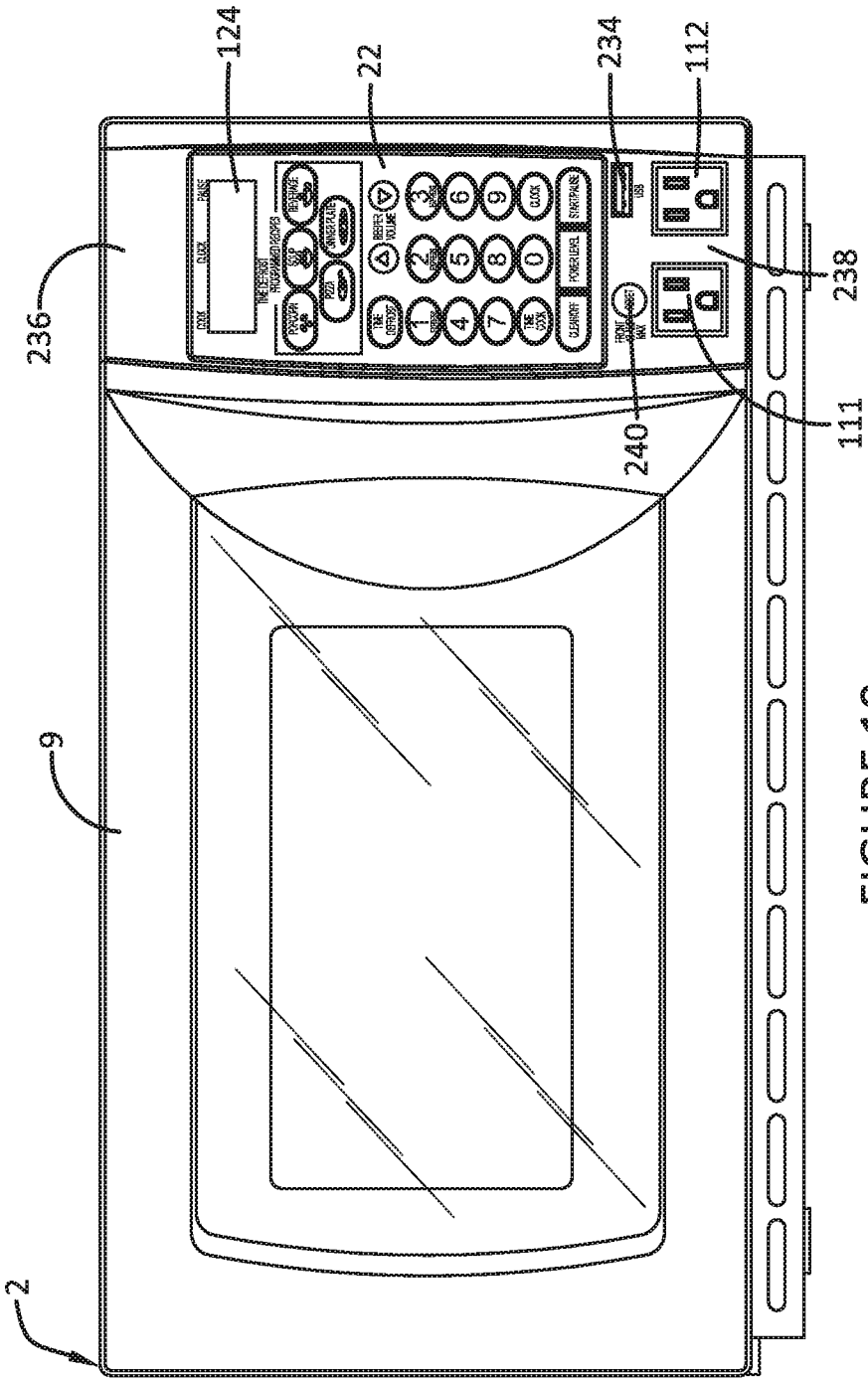


FIGURE 19

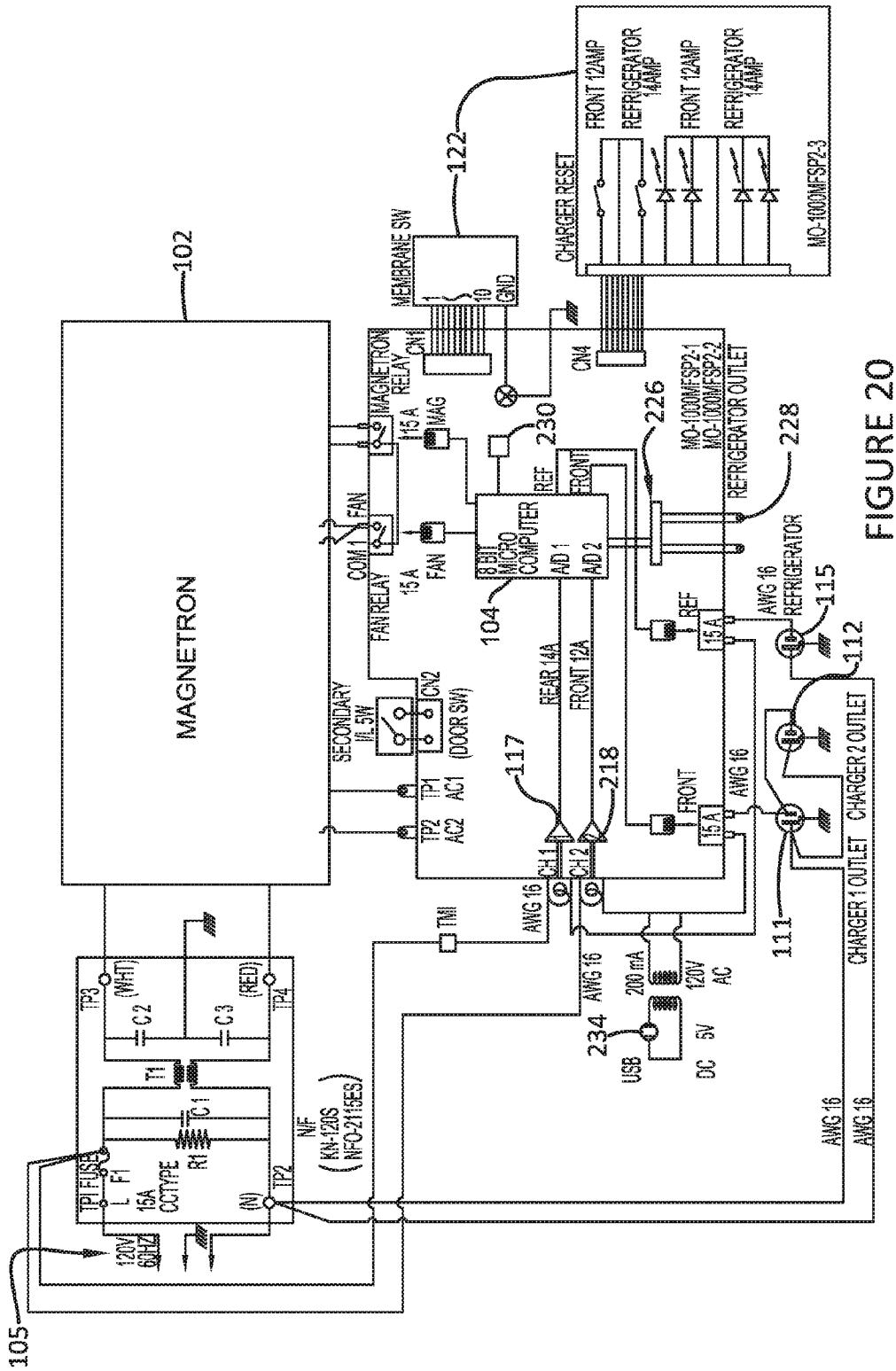
MAGNETRON
102
105
122
104
117
218
226
228
230
234
111
112
115
MEMBRANE SW
GND
CN1
CN4
CHARGER RESET
FRONT 12AMP
REFRIGERATOR 14AMP
MO-1000MFSP2-3
MO-1000MFSP2-1
MO-1000MFSP2-2
REFRIGERATOR OUTLET
MAGNETRON RELAY
15 A
MAG
FAN
COM 1
FAN RELAY
8 BIT MICRO COMPUTER
AD 1
AD 2
REF
FRONT
REAR 14A
FRONT 12A
SECONDARY I/L SW
CN2
(DOOR SW)
TP1
AC1
TP2
AC2
CH 1
CH 2
AWG 16
REFRIGERATOR
CHARGER 2 OUTLET
CHARGER 1 OUTLET
TMI
200 mA
120V AC
USB
DC 5V
TP3
(WHT)
TP4
(RED)
C 2
C 3
T1
C 1
R1
TP1 FUSE
F1
15A CCTYPE
(N)
TP2
N/F
(KN-120S NFO-2115ES)
120V 60HZ

FIGURE 20

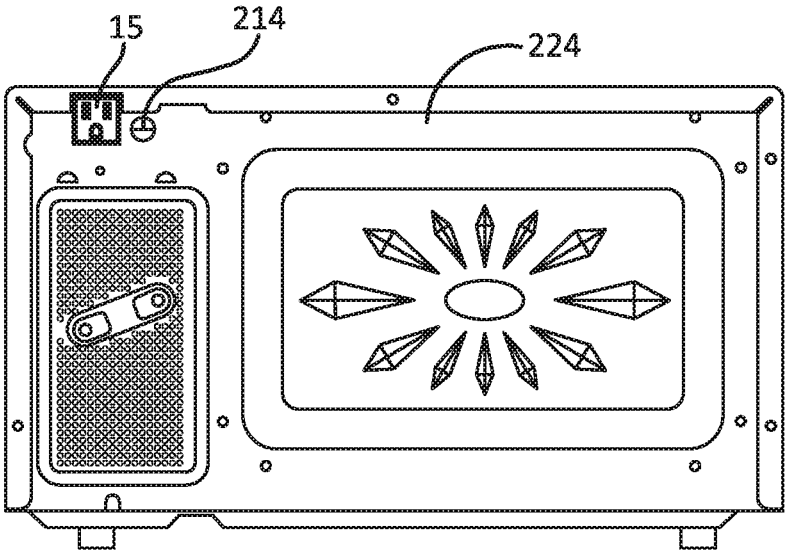


FIGURE 21

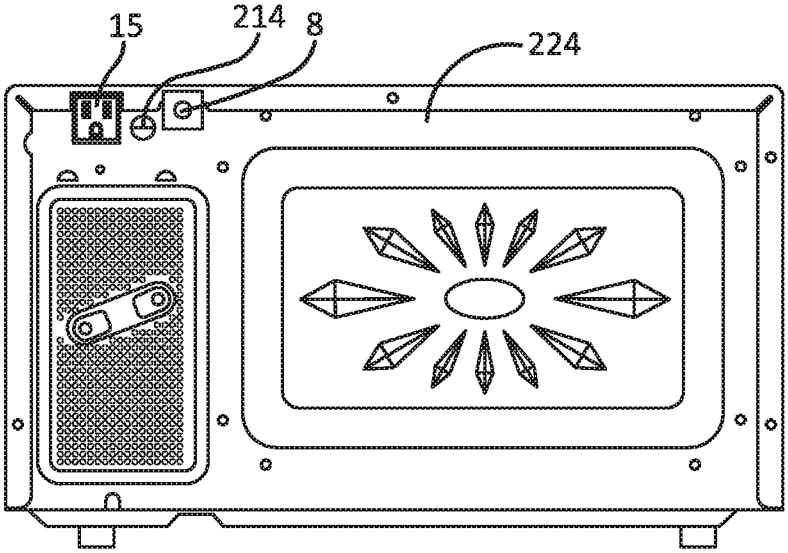


FIGURE 22

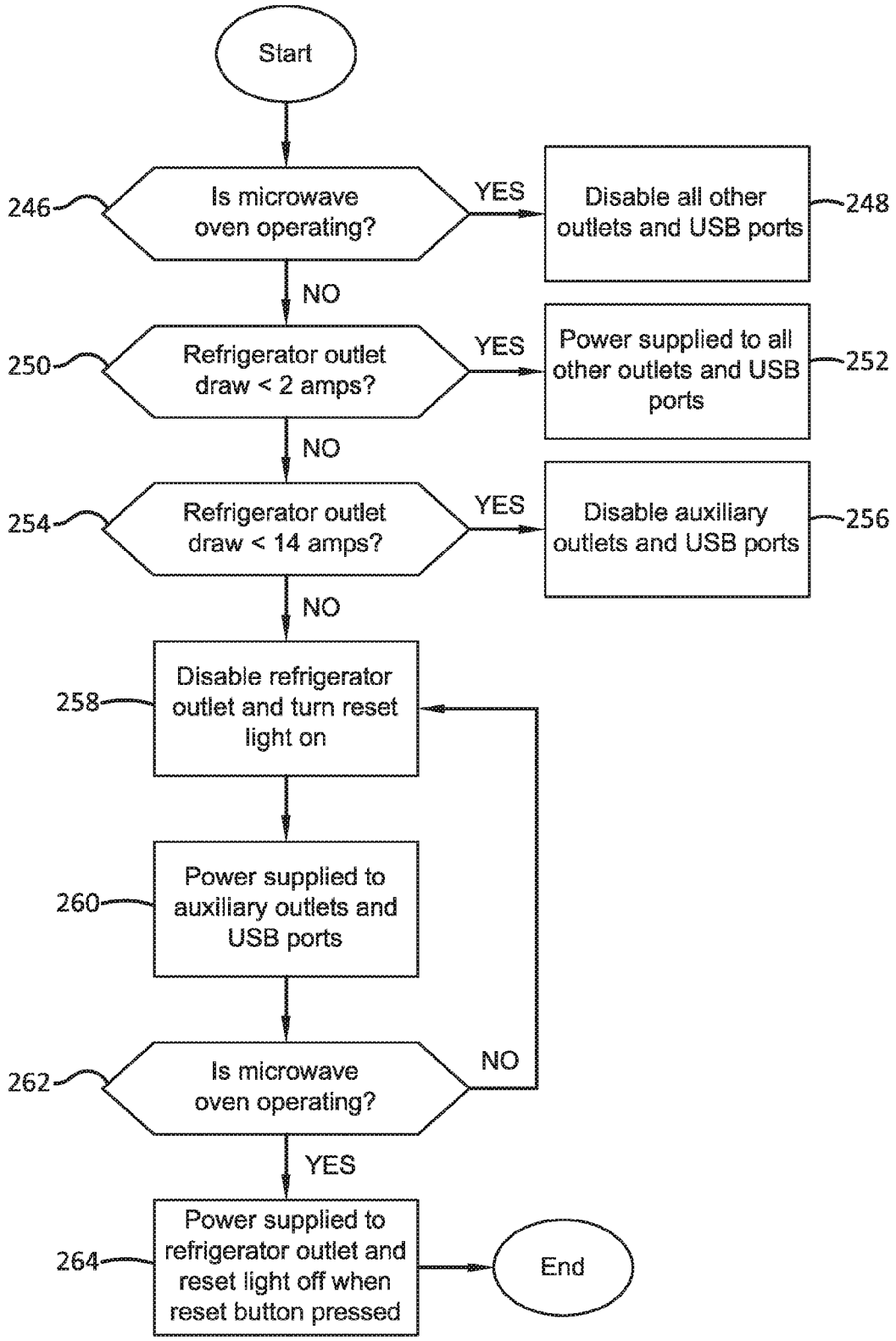
Start
246
Is microwave oven operating?
YES
Disable all other outlets and USB ports
248
NO
250
Refrigerator outlet draw < 2 amps?
YES
Power supplied to all other outlets and USB ports
252
NO
254
Refrigerator outlet draw < 14 amps?
YES
Disable auxiliary outlets and USB ports
256
NO
258
Disable refrigerator outlet and turn reset light on
260
Power supplied to auxiliary outlets and USB ports
262
Is microwave oven operating?
NO
YES
264
Power supplied to refrigerator outlet and reset light off when reset button pressed
End

FIGURE 23

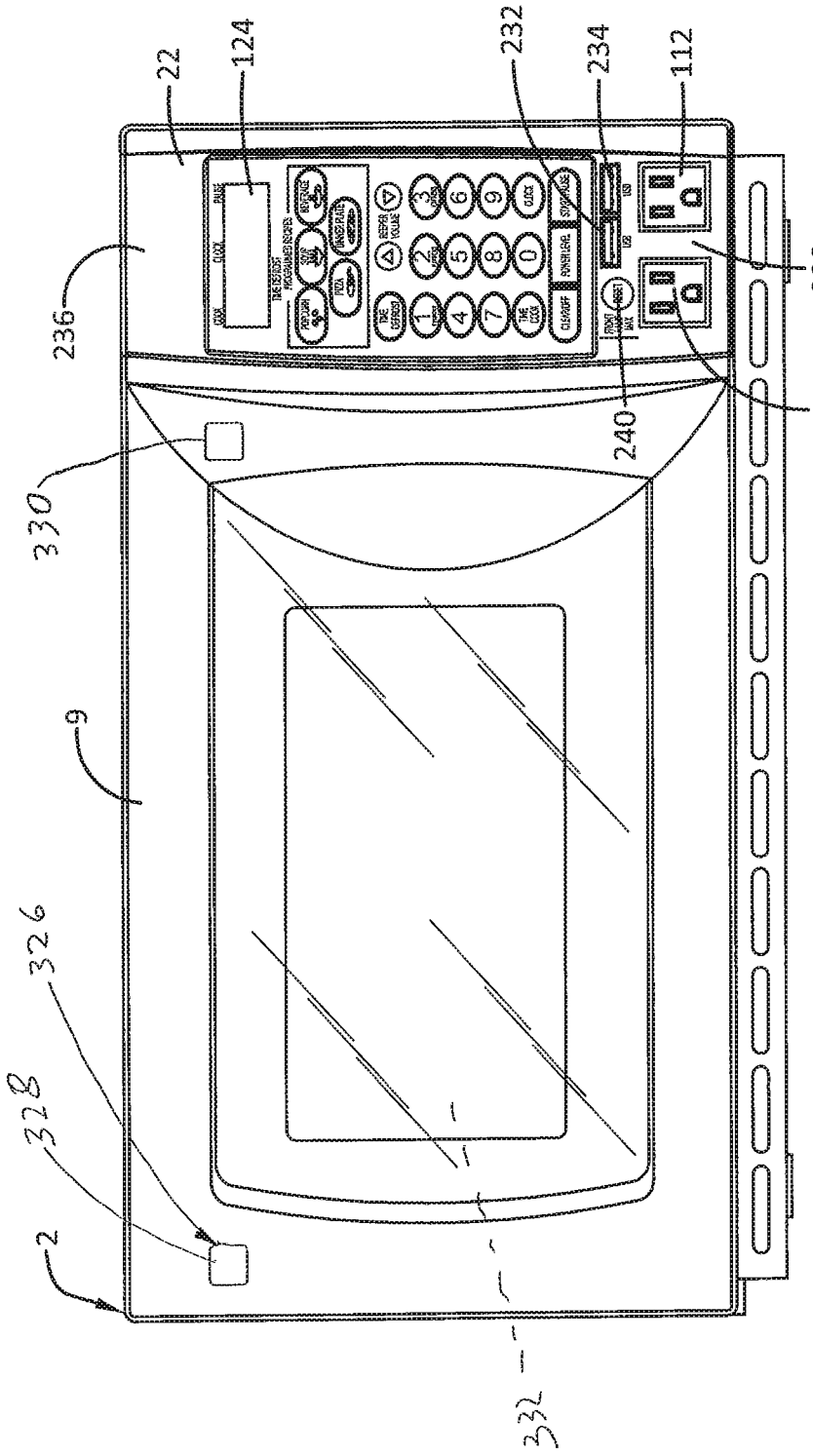


FIGURE 24

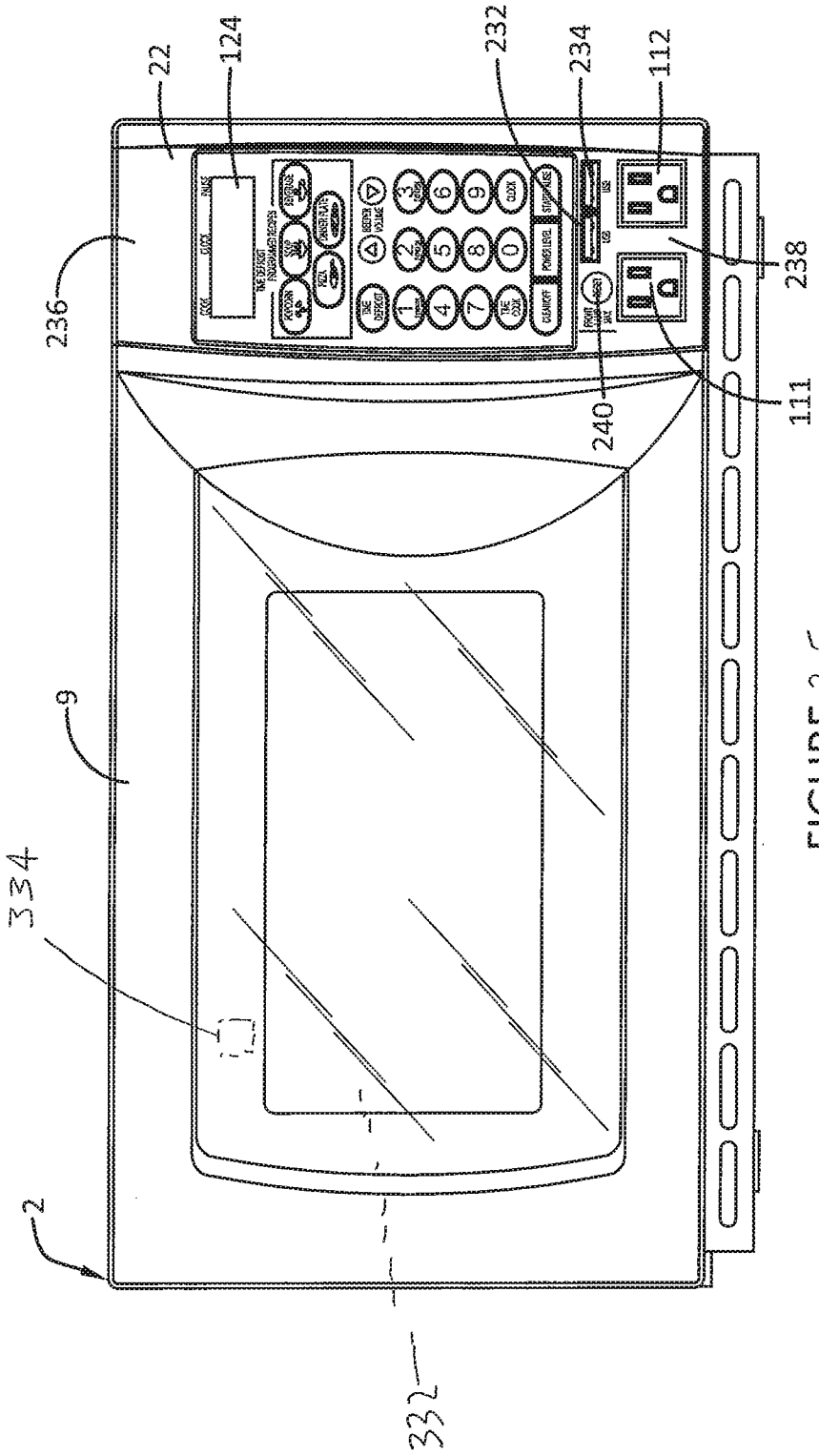


FIGURE 25

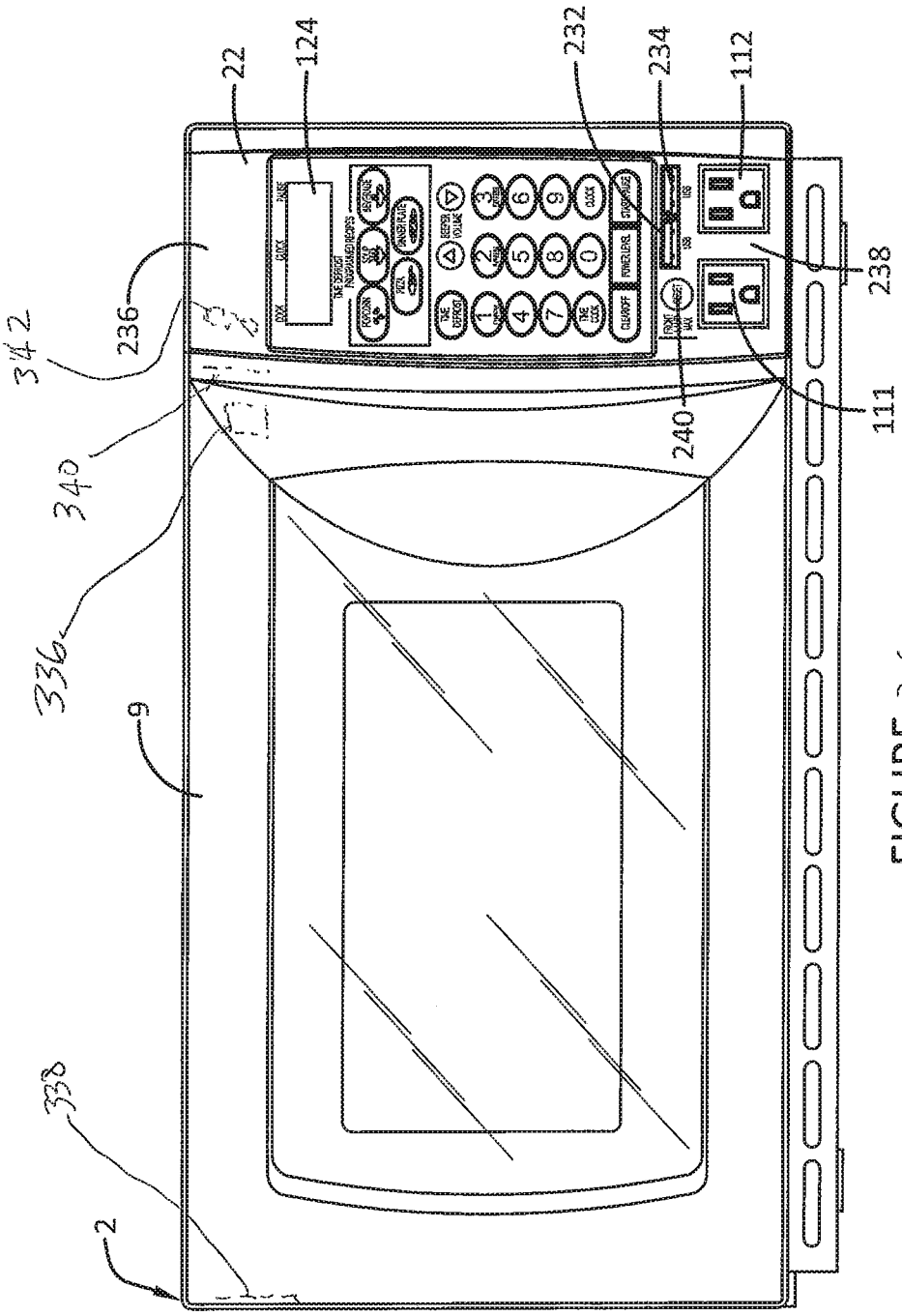


FIGURE 26

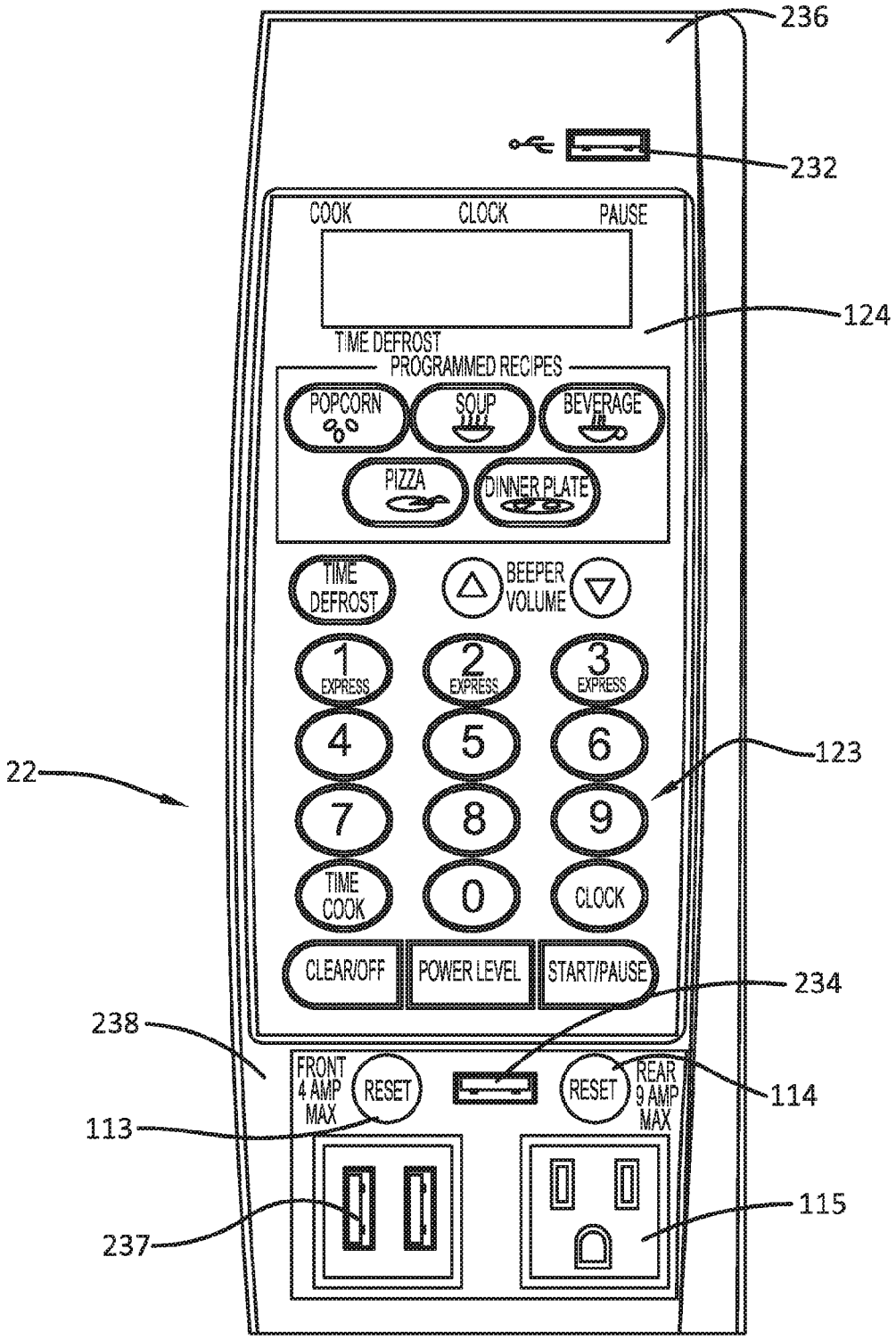
236
232
COOK
CLOCK
PAUSE
124
TIME DEFROST
PROGRAMMED RECIPES
POPCORN
SOUP
BEVERAGE
PIZZA
DINNER PLATE
TIME DEFROST
BEEPER VOLUME
1 EXPRESS
2 EXPRESS
3 EXPRESS
4
5
6
123
22
7
8
9
TIME COOK
0
CLOCK
CLEAR/OFF
POWER LEVEL
START/PAUSE
234
238
FRONT 4 AMP MAX
RESET
RESET
REAR 9 AMP MAX
114
113
115
237

FIGURE 27

# MULTIPLE LINKED APPLIANCE WITH AUXILIARY OUTLET

## CROSS-REFERENCE TO RELATED APPLICATIONS

This application is a continuation-in-part of U.S. application Ser. No. 14/262,290, filed on Apr. 25, 2014, which is a continuation-in-part of U.S. application Ser. No. 12/317,632 filed on Dec. 23, 2008, which claims benefit under 35 U.S.C. §119(e) of Provisional Application No. 61/009,419, filed Dec. 28, 2007, the disclosures of which are incorporated herein by reference in its entirety.

## TECHNICAL FIELD

Exemplary embodiments relate to improvements to appliances. Specifically, exemplary embodiments relate to improvements to appliances that include compact refrigerator and microwave oven functionality.

## BACKGROUND

Compact refrigerators are used for many different purposes. They are often found in dormitories, hotels, offices and other establishments. Compact refrigerators are also often used in housing units for storage of beverages in bar areas or entertainment areas. Compact refrigerators provide useful storage for refrigerated items without the requirement for the considerable floor space and power draw that is required for a full size refrigerator.

Compact refrigerators and associated appliances may benefit from improvements.

## SUMMARY

In one exemplary embodiment, an apparatus is provided that includes a microwave oven. The microwave oven includes a radiation emitting microwave element and a microwave housing. The microwave housing bounds a cooking interior area. The radiation emitting microwave element is operative to irradiate the cooking interior area. The apparatus also includes a refrigerator. The refrigerator includes a refrigerator housing. The refrigerator housing bounds a cooled refrigerator interior area. The refrigerator housing is in fixed operative connection with the microwave housing. The refrigerator includes a refrigerant compressor, or other refrigeration technology. The refrigerant compressor is operative to compress a refrigerant material. The refrigerant material is operative to cause cooling of the cooled refrigerator interior area. The apparatus includes at least one power control circuit. The at least one power control circuit is operative to cause electrical power to be selectively delivered to the microwave element and the compressor. One of the microwave element and compressor does not operate when the other of the microwave element and the compressor operates. The microwave oven further includes at least one sensor emitter and at least one sensor receiver configured to receive radiation from the at least one sensor emitter, wherein air of at least a portion of the cooking interior area extends intermediate of the at least one sensor emitter and the at least one sensor receiver. The apparatus also includes at least one safety circuit. The at least one safety circuit is in operative connection with the at least one sensor emitter, the at least one sensor receiver, and the microwave element. The at least one safety circuit is operative to cause the at least one sensor emitter to emit sensor radiation and the at least one sensor receiver to sense sensor radiation from the at least one sensor emitter while the microwave element operates during a cooking session. A determination is made that a transmission amount of sensor radiation from the at least one sensor emitter that reaches the at least one sensor receiver has fallen by at least a threshold amount during the cooking session, due to smoke in the cooking interior area. Responsive at least in part to the determination, the microwave element is no longer supplied with electrical power.



## BRIEF DESCRIPTION OF THE DRAWINGS

The system of the application is explained in more detail below with reference to the accompanying drawing, in which:

FIG. **1** is a front perspective view of an exemplary embodiment of an appliance system of this application.

FIG. **2** is a rear perspective view of the embodiment of FIG. **1** showing an alternative arrangement.

FIG. **3** is a block diagram of an embodiment of the system.

FIG. **4** is a schematic diagram of the embodiment of FIG. **3**.

FIG. **5** is a logic flow diagram of an embodiment.

FIG. **6** is a logic flow diagram of another embodiment.

FIG. **7** is a logic flow diagram of another embodiment.

FIG. **8** is a graph illustrating the duty cycles of the appliances in the system of FIG. **3**.

FIG. **9** is a block diagram of an alternate embodiment.

FIG. **10** is a schematic diagram of the embodiment of FIG. **9**.

FIG. **11** is an illustration of a control panel of the embodiment of FIG. **9**.

FIG. **12** is a front view of the microwave oven according to another embodiment.

FIG. **13** is a side view of the microwave oven door of FIG. **12**.

FIG. **14** is a top perspective view of a charging pad on the top portion of a microwave oven.

FIG. **15** is an illustration of a control panel of an alternate embodiment.

FIG. **16** is a schematic diagram of the embodiment of FIG. **15**.

FIG. **17** is a front view of the microwave oven according to another embodiment.

FIG. **18** is a schematic diagram of the embodiment of FIG. **17**.

FIG. **19** is a front view of the microwave oven according to another embodiment.

FIG. **20** is a schematic diagram of the embodiment of FIG. **19**.

FIG. **21** is a rear view of the microwave oven according the embodiments of FIGS. **12-19**.

FIG. **22** is a similar view as that of FIG. **21** except that the AC cord is shown.

FIG. **23** is a logic flow diagram of an embodiment.

FIG. **24** is a front view of the microwave oven according to another embodiment.

FIG. **25** is a front view of the microwave oven according to another embodiment.

FIG. **26** is a front view of the microwave oven according to another embodiment of this application.

FIG. **27** is an illustration of a control panel of an alternate embodiment.

## DETAILED DESCRIPTION

A multiple linked appliance system **1**, for example, a combination microwave oven **2** and refrigerator **3** incorpo-

rating features of the present application is illustrated in the Figures. Although the present application will be described with reference to the embodiments shown in the drawings, it should be understood that embodiments may have many alternate forms. In addition, any suitable size, shape or type of elements or materials could be used. The computer or controller devices described in this application may be constructed having one or several processors and one or several program product modules stored in one or several memory elements. For illustration, computer or controller components may be described as individual units by function. It should be understood, that in some instances, these functional components may be combined.

In the exemplary embodiments, the circuits described therein may comprise one or more circuits including data processors which for purposes hereof corresponds to any electronic device that is configured via circuit executable instructions that can be implemented in either hardware circuits, software, firmware or applications that are operative to enable the circuits to process data and carry out the other actions described herein. For example, the circuits may include circuits that correspond to one or more or a combination of a CPU, FPGA, ASIC or any other integrated circuit or other type or circuit that is capable of processing data. The processors may be included in a computer, server or other type of electronic device. Further, the circuits described herein may include data stores that correspond to one or more of volatile or non-volatile memories such as random access memory, flash memory, magnetic memory, optical memory, solid state memory or other devices that are operative to store computer executable instructions and data. Computer executable instructions, may include instructions in any of a plurality of programming languages and formats including, without limitation, routines, subroutines, programs, threads of execution, objects, methodologies and functions which carry out the actions such as those described herein. Structures for the circuits may include, correspond to and utilize the principles described in the textbook entitled Microprocessor Architecture, Programming, and Applications with the 8085 by Ramesh S. Gaonker (Prentiss Hall, 2002), which is incorporated herein by reference in its entirety. Of course it should be understood that these circuit structures are exemplary and in other embodiments, other circuit structures for storing, processing, resolving and outputting information may be used.

In exemplary embodiments the refrigerator may be connected to a power supply that provides a connection for the microwave oven to be connected to the same supply. A single plug, therefore, may serve to connect both appliances and the current required for each appliance is supplied by the same supply cord and circuit. In exemplary embodiments power may be supplied by a 110V AC current outlet.

To make this combination attractive for use in dorm rooms, hotel rooms, recreational vehicles, tractor trailer cabs, and other similar locations, it may be necessary to provide some way by which the peak currents of both appliances are not demanded from the supply at the same time. Many household circuits are protected from overload conditions by an automatic circuit breaker that is activated when current in the circuit exceeds the breaker rating. This is 15 amps in many circuits.

The duty cycle of a refrigerator used in these combined systems includes a current spike that occurs during the first few seconds of operation. This is the start up current for the refrigerator compressor and is considerably reduced as the compressor attains its operational speed. In typical refrigerator appliances the peak current may be in the range of 7 to 9 amps, while the steady state current may level off at 1.4 amps or less. A microwave oven demands a relatively steady 8 to 13 amps of cooking power during operation of the cooking element. It is apparent that an overload condition will occur frequently, when both appliances are in use, unless some control is exercised.

In an exemplary embodiment, a combination microwave and refrigerator system is constructed having a single plug input supply. The microwave oven is adapted to provide power to a refrigerator through a power supply outlet, and to auxiliary receptacles adapted for connection to devices that operate at a low power draw. The microwave oven includes a microprocessor power control circuit or controller adapted to monitor operation of the refrigerator compressor and controls the power to the microwave magnetron cooking element and other components. The current draws on the low power receptacles are separately monitored for control by the microwave controller. The microwave controller is adapted to balance the duty cycles of the connected appliances attached to avoid overload conditions. A control logic flow is implemented internally within the microwave controller. A receptacle or other power connecting power supply outlet for the refrigerator and the low power auxiliary receptacle may be implemented as part of the microwave control panel.

In one embodiment, the auxiliary outlets are constructed to provide low power for the purpose of recharging cellular mobile phones, personal media devices and digital cameras, in addition to operating lap top computers and other low power devices. The current to the auxiliary outlets is sensed and provided to the microwave controller.

In another embodiment, the power to the auxiliary outlets is disabled by the microwave controller when the microwave magnetron is energized or whenever the current to the auxiliary outlets exceeds a preset value.

In one embodiment, a control model or logic flow is established and executed by the microwave controller. The model is dependent on the state of operation of the microwave magnetron. As part of the control model, the power being drawn to the compressor is monitored to sense operation of the compressor to compress refrigerant to provide cooling. When cooking power is demanded by the microwave the compressor is disabled by having electrical power thereto withdrawn by the control circuit for a preset minimum period. When microwave demand ceases, refrigerator compressor power is restored provided that the preset minimum period has expired.

In another embodiment of the control model, sensing circuits are connected to monitor current drawn to the auxiliary outlets. The control model is adapted to disable the power to the auxiliary receptacles, if the microwave commences cooking operation. In addition the auxiliary receptacles are disabled if a predetermined maximum current draw is sensed. Another control model is based on operation of the refrigerator and operates to disable the auxiliary receptacles when the compressor is in an operation condition, such as for example in the start up mode.

In one aspect of an exemplary embodiment, a non-transitory processor storage readable medium having processor executable program instructions embodied therein for operating at least one processor of a control circuit to control a system of multiple linked appliances having a microwave oven, a refrigerator, and an auxiliary power supply outlet is provided. The processor executable program code causes the control circuit to disable the refrigerator and the auxiliary power supply outlet, when the microwave demands power,

and enable the auxiliary power supply outlet when the microwave is not drawing cooking power.

One embodiment of a multi-appliance interconnected system **1** is illustrated in FIG. **1**. This embodiment consists of two appliances, a refrigerator **3** and a microwave oven **2**. Refrigerator **3** is electrically connected to microwave oven **2** by power cord **7** to refrigerator receptacle **15**, shown at the rear of the microwave **2** in FIG. **2**. Refrigerator **3** is generally subject to control by the microwave microprocessor controller which is alternatively referred to as power control circuit **4** of the microwave oven **2**. The power control circuit may be operative to cause electrical power to be selectively delivered to the microwave magnetron and the refrigerator compressor. A single cord **8** provides input electrical power to the system **1** from receptacle **5** through microwave **2**. In the case where stand alone appliances are used, as shown in FIGS. **1** and **2**, microwave oven **2** is connected directly to power source **5**. The refrigerator **3**, as the heaviest component, is used as the base with the microwave oven **2** stacked on top. In the selection of the refrigerator **3**, it would be advantageous in one embodiment for the height of the refrigerator to be no more than 48 inches above the floor. This provides a more ergonomic operation of the microwave oven **2** for the user. In addition, in the stacked position of the appliances in an exemplary embodiment, the doors **9** and **10** of the microwave **2** and refrigerator **3**, respectively, are arranged in a common plane.

At least one power control circuit **4** serves as a controller for the operation of the microwave oven **2** and is also adapted to control the other components of system **1**, as shown in FIG. **3**. Power is distributed throughout the system **1** under control of microwave controller **4** and digitally operated switches such as relays **19** and **20** of FIG. **3**. Power is distributed to each of the appliances **2** and **3**, and to auxiliary low power receptacles **11** and **12**. In use lamps **13** and **14** in the form of LEDs or the like may be connected to the auxiliary receptacles to indicate power being available or disabled. The low power auxiliary receptacles **11** and **12** are provided to permit convenient access for plugging in a low power device, for example, rechargeable devices, such as cellular phones, PDAs, or other electronic devices that do not demand high power. As shown in the graph of FIG. **8**, there are instances during which, if more than one of the appliances is in use, the cumulative current would cause an overload condition.

Control panel **22** of microwave oven **2** may be adapted to provide a display of the particular status of the controlling relays. For example, LEDs **13** and **14** may indicate that power to the outlets **11**, and **12** are disabled or available. In one embodiment the lamps will light when power is available at the outlet and flash when disabled. In another embodiment the lamps will light when power is disabled at the outlet and not activate when power is available at the outlet as a means to reduce the Standby Power requirements. A button operated touch panel provides manual control.

As shown in FIG. **4**, in order to control the power to the microwave **2**, refrigerator **3** and receptacles **11** and **12**, sensing circuits, may be coupled to the control circuit to monitor current to the appliances and the auxiliary receptacles. A relay **20** is connected in the power line to the refrigerator and may be actuated by signals from controller **4**. In particular, according to an exemplary embodiment, sensing circuits **16**, as shown in FIG. **4**, have sensors **17** and **18** coupled to the power line of the auxiliary outlets **11** and **12** to monitor the current being used by a connected device. Sensors **17** and **18** may include current sensing transformers of the type available from Triad Magnetics of Corona, Calif. The signals generated by sensors **17** and **18** may be used to activate switches or other control components, such as relays **19**. Relays **19** may be actuated by control circuit **4** to enable and disable power to the low power auxiliary outlets **11** and **12** in response to signals from sensors **17** and **18**. A maximum current may be set by the power control circuit **4** to prevent overload of the outlets **11** and **12**. In one embodiment of the system of this application, the maximum current limit is set at 2 amps.

In another embodiment, a clock function **21** included in the at least one control circuit **4** is used to provide timed delays during which, for example, refrigerator **3** would be prevented from undesirably rapid on/off cycles. When the compressor of the refrigerator **3** is disabled during microwave cooking operation, a time delay of 3 minutes is provided during which refrigerator **3** will remain disabled, even if microwave use is only for a short period. Control circuit **4** may be programmed to manage the power to the components of the system to avoid overload conditions, while minimizing disruptions in the use of an individual appliance. A model of operative events and related control operations may be designed into the program instructions executed by at least one control circuit **4** to provide a control methodology as illustrated in FIGS. **5-7**.

In one embodiment, as illustrated in the block diagram of FIG. **3**, at least one control circuit **4**, constructed as part of the controller for microwave **2**, is adapted to process the sensor signals and identify particular events in the system **1** related to a particular appliance. Circuit **4** controls the power to microwave **2** and refrigerator **3** and also low power receptacles **11** and **12** to avoid overload conditions. The circuit **4** could be programmed to execute the control methods illustrated and described below. In one embodiment, the circuit **4** includes a control microprocessor for microwave oven **2** and is adapted to execute the program instructions described below. Control circuit is coupled directly to refrigerator outlet **15** and low power outlets **11** and **12**.

In one embodiment, shown in FIG. **1**, the outlets **11**, and **12**, are installed as part of the front control panel of microwave oven **2**. In FIG. **2**, in another embodiment, the auxiliary receptacles **11** and **12** and refrigerator receptacle **15** are accessible at the rear of the microwave oven **2**. In these alternative embodiments, the microwave oven **2** is connected by supply cord **8** directly to power supply receptacle **5**. Refrigerator **3** is connected by power cord **7** to receptacle **15** in microwave oven **2** as shown in FIG. **2**.

In one embodiment, control models comprising logic flows are established as shown in FIGS. **5-7** for execution by the at least one control circuit **4**. These models can be in the form of processor executable instructions stored in a computer readable medium, such as software or firmware within the circuit **4**. The models shown are, in the first instance, dependent on the state of operation of microwave oven **2**. The current demands of the microwave **2** when drawing cooking power are generally the most significant contribution to overload, as shown in FIG. **8**. To avoid overload conditions, power to the low power receptacles **11** and **12** and refrigerator receptacle **15** is disabled during microwave operation. If the refrigerator **3** compressor is drawing power when the microwave **2** is turned on to commence cooking, the power to the refrigerator compressor is turned off and clock function **21** is used to determine a predetermined period during which the compressor of refrigerator **3** cannot be restarted. A time delay, for example, of 3 minutes, may be set through programming of the control circuit and when this delay period is expired, receptacle **15** may again be enabled,

provided microwave cooking operation has ceased. This prevents a too rapid restart of the compressor that may otherwise result in damage.

In the embodiment shown in FIG. **5**, if low power is demanded at receptacle **11** or **12** and microwave oven **2** is not in use for cooking, power is supplied to the low power receptacles, provided further, that the current demand at an individual outlet does not exceed a preset limit, for example, 2 amps. Since the auxiliary outlets may be enabled during refrigerator compressor operation, there may be an overload generated at peak compressor operation. In one embodiment the control circuitry acts to disable the auxiliary outlets during compressor startup to prevent accidental overload of the system. Therefore as illustrated in the logic flow diagram of FIG. **5**, control circuitry may be adapted to check the operational status of the refrigerator, as well as the microwave oven, prior to enabling the auxiliary outlets.

FIGS. **9-11** illustrate another embodiment. In this embodiment the sensing components **117** and **118** are connected to reduce the risk of overload by the combined demands of the auxiliary outlets **111** and **112** and the refrigerator outlet **115**. In the configuration as shown in FIG. **10**, current sensor **117** is connected to monitor the current draw through the refrigerator outlet **115** and is configured to limit the refrigerator current component so that it does not exceed 10 amps. Current sensor **118** is connected to monitor the combined current in the auxiliary outlets **111** and **112**. Current sensor **118** is constructed to limit the combined auxiliary outlet current to 4 amps. In this manner the risk of overload is minimized. In the block diagram of FIG. **9**, the microwave **102** having at least one control circuit comprising controller **104** is connected to power supply **105**. Clock function **121** of the controller provides a timing device to determine a restart delay for refrigerator **103**. Sensing circuit/sensor **117** is connected to monitor the current demanded by refrigerator **103** and sensing circuit/sensor **118** is connected to low power receptacles **111** and **112** to monitor the combined current draw of receptacles **111** and **112**.

In this embodiment, as shown in FIG. **11**, a control panel **122** is arranged with a keypad **123** for manual control and a display **124**. Auxiliary outlet **111** is shown as accessible from the front and is associated with a status LED indicator and reset button **113** that may be caused to be on during use and switch to a flashing mode when the microwave is drawing cooking power. Refrigerator outlet **115** is also shown to be accessible from the front panel and is associated with an LED indicator and reset button **114**. Similarly LED indicator **114** is controlled to be on during use of the refrigerator and to switch to a flashing mode when the microwave is drawing cooking power. In another embodiment, the status LED indicator and reset button **113** may be caused to be off during use and switched on or to a flashing mode when the microwave is drawing cooking power. Similarly, in this embodiment, the LED indicator **114** is controlled to be off during operation of the refrigerator compressor and switched on or to a flashing mode when the microwave radiation cooking element is operating.

A further embodiment of the processor operational model is shown in FIG. **6**. In this model, the refrigerator compressor draws or demands power. This may be triggered by a temperature rise of the refrigerator interior area within the housing of the refrigerator and involve start up of the refrigerator compressor with an associated peak power demand. If the microwave is currently drawing cooking power, the cycling of the refrigerator compressor will be delayed. If the microwave cooking element was on and subsequently cycled off, the clock function **21** is used to determine if the restart can occur. Under some circumstances, it may be necessary to give the refrigerator compressor priority to prevent an undesirable rise in temperature. In the latter instance, the control circuit can be coupled to the refrigerator temperature sensor to execute a time sequence during which the microwave cooking element will be disabled by not having power supplied thereto to allow the refrigerator to return to proper operating temperatures.

In the embodiment of FIG. **7**, priority is given to the power demands of the microwave oven, as indicated above. Use of the receptacles **11**, **12**, and **15** are, therefore, disabled during microwave cooking operation. The operational models, illustrated in FIGS. **5-7**, may be established by logic flows implemented by instructions that are programmed or imbedded in controller **4**.

In this manner a system of linked appliances, including a microwave oven, refrigerator, and at least one low power appliance may all be connected through a common supply cord to a receptacle providing house current or other electrical power level without the risk of inconvenient interruptions during use caused by overloads.

It is also advantageous to provide such a combination microwave/refrigerator system that also provides auxiliary outlets for low power applications, such as for the purpose of recharging cellular phones, operating lap top computers and other low power devices, while controlling the operation of the appliances to avoid overload conditions.

In another exemplary embodiment as illustrated in FIGS. **12** and **13**, the auxiliary outlets or receptacles **211**, **212** may be included as part of the front control panel **222** of the microwave oven **202** and located on the upper portion **270** of the front control panel **222**. The auxiliary outlets **211**, **212**, front control panel **222** and microwave oven **202** are similar to auxiliary outlets **11**, **12**, front control panel **22**, and microwave oven **2** except for that discussed below. In this exemplary embodiment, the auxiliary outlets **211**, **212** are positioned side by side with respect to each other with each of the auxiliary outlets **211**, **212** being at the same height as the other. The auxiliary outlet **211** of FIG. **12** may be associated with a status LED indicator and reset button **213**, which is located on the lower portion **272** of the front control panel and in vertical alignment with the auxiliary outlet **211**. The status LED indicator and reset button **213** may be caused to be on during use and switched to a flashing mode when the microwave oven **202** is drawing cooking power. The auxiliary outlet **212** of FIG. **12** may be associated with status LED and reset button **214**, which is located on the lower portion of the front control panel and in vertical alignment with the auxiliary outlet **212**. The status LED indicator and reset button **214** may be caused to be on during use and switched to a flashing mode when the microwave oven **202** is drawing cooking power. In another embodiment, the status LED indicator and reset button **213** may be caused to be off during use and switched on or to a flashing mode when the microwave oven is running. Similarly, in this embodiment, the status LED indicator and reset button **214** may be caused to be off during use and switched on or to a flashing mode when the microwave oven is cooking. All other elements are similar in structure and function as that of the embodiments shown in FIGS. **1-11**. Thus, the same reference numbers will be used in this exemplary embodiment to indicate elements that are similar in the embodiments shown in FIGS. **1-11**.

Smart technology may be included in each of the exemplary embodiments. For example, a user may be able to regulate the refrigerator **3** such as by turning it on and off remotely by a remote control **217**. The remote control **217**

may include a hand held device such as a cellular phone. The cell phone may also be a smart phone. A charging pad **219** (FIG. **14**) may be provided on the microwave oven **2** or other suitable place to receive the smart phone for charging the smart phone. For example, a wireless charging pad **219** may be positioned on top **225** of the microwave oven **2** for recharging the smart phone. The charging pad **219** may be built into the top **225** of the microwave oven **2** or be a separate piece that is mounted to the top **225** of the microwave oven **2**. The exemplary charging pad **219** is an inductive charging pad and includes a recessed area **220** for receiving an item to be charged such as the smart phone. The control circuitry may include or be in operative connection with a wireless interface **221** configured for communicating with for the remote control **217** for controlling the microwave or refrigerator and work in conjunction with the control circuitry to perform functions such as removing the supply of electrical power to the microwave oven **2** and/or refrigerator **3**. USB ports **223**, **224** may be provided in the area of the charging pad **219**. Alternatively, or in addition, power outlets may be provided in proximity to the charging pad **219**. Alternatively, the charging pad **219** may be provided on the front, side, rear or bottom of the microwave oven **2**.

As seen in FIGS. **16**, **18**, and **20**, a safety sensor which is alternatively referred to herein as a safety circuit **226** such as a smoke or gas sensor may be provided in the microwave oven **2**. The smoke sensor **226** operates to turn off the microwave oven upon sensing smoke or polluted air indicative of a potentially dangerous condition such as excessive smoke generated from overcooked food. The safety sensor **226** may be powered on or otherwise operational when the microwave oven is in operation. The sensor includes programmed instructions and may implement logic flows and algorithms to determine the optimal activation point. The exemplary smoke sensor may be battery-powered or powered by house current through the control circuitry with an optional battery backup when the power from the house current is out. The smoke sensor may include an ionization smoke sensor that uses a radioisotope, typically Americium-241, to ionize air. The ionization smoke sensor operates to turn off the cooking function of the microwave oven upon sensing a difference due to smoke indicative of a potentially dangerous condition. The smoke sensor may include a radiation type smoke detector that may contain a source of infrared, visible, or ultraviolet light emitter (typically an incandescent light bulb or light-emitting diode), a lens, and a photoelectric or other type of radiation sensing receiver (typically a photodiode).

The sensor **226** may include an alcohol sensor that is coupled with a thermistor **228**. An exemplary alcohol sensor **226** may operate in a temperature range. When heating is sensed by the thermistor **228**, the thermistor **228** through suitable control circuitry causes the alcohol sensor **226** to turn on and become operational and check for properties of the gas within the interior area of the microwave.

If the alcohol sensor **226** senses polluted air that is indicative of a dangerous condition, a shutdown signal is outputted by the alcohol sensor to the controller **104**. Upon receiving the shutdown signal, the controller **104** determines that the radiation emitting element of the microwave oven **2** should be shut down and causes the microwave to shutdown through the withdrawal of electrical power. If (after the alcohol sensor is caused to be turned on by the thermistor) the alcohol sensor **226** senses air that is not indicative of a dangerous condition such as the air produced by normal cooking of food in the microwave oven **2**, the alcohol sensor circuitry will not send a shutdown signal to the controller **104**.

Alternatively or in addition, a fault indicator **230** may be coupled to the microcontroller **104** or other circuitry to indicate that there is a dangerous condition upon detection by the alcohol sensor **226**. For example, the fault indicator **230** may be a buzzer that is activated in response to the alcohol sensor **226** sensing polluted air indicative of a dangerous condition. In another example, fault indicator **230** may include the display **124** displaying a fault message such as "E-1" in response to the alcohol sensor **226** detecting polluted air indicative of a dangerous condition. Alternatively the fault indicator may output one or more signals, such as wireless alarm signals that can be detected by a receiver of an alarm system.

The exemplary embodiments may include a combination of fault indicators. For example, upon the alcohol sensor **226** sensing air that is indicative of a dangerous condition, a shutdown signal is outputted by the alcohol sensor **226** to the controller **104**. Upon receiving the shutdown signal, the controller **104** determines that the microwave oven **2** should be shut down and causes the radiation element of microwave oven **2** to be shutdown by withdrawing electrical power therefrom. In addition in an exemplary embodiment, a buzzer is activated and the display **124** displays a fault message such as "E-1" in response to the alcohol sensor **226** sensing polluted air indicative of a dangerous condition.

The alcohol sensor **226** may be reset automatically responsive to the alcohol sensor **226** no longer detecting gas indicative of the dangerous condition. Alternatively or in addition, the alcohol sensor **226** may be reset upon a sensor sensing opening of the door **9** of the microwave oven **2**. The display may display a "bar" or other suitable icon to indicate that the alcohol sensor **226** is turned on. Other types of suitable safety sensors may also be used instead of the alcohol sensor to detect a dangerous condition within the cooking area of the microwave.

In addition to a sensor which reacts to the gases generated from cooked food, the sensor **226** may use a temperature sensing capability such as, for example, using the thermistor **228** and related elements mentioned above.

Referring to FIG. **24**, in another exemplary embodiment, the safety sensor which is alternatively referred to as a safety circuit may comprise an infrared sensor **326**. The infrared sensor **326** may include two disposed infrared sensor elements in the form of a sensor emitter **328** and sensor receiver **330** (schematically shown in FIG. **24**) provided on the microwave oven and located in the microwave's cavity **332**. The exemplary infrared sensor **326** operates as follows. The sensor emitter **328** emits radiation and the sensor receiver **330** senses sensor radiation from the sensor emitter **328** while the microwave element operates during a cooking session. When smoke that is indicative of a dangerous condition passes in between the infrared sensor elements **328**, **330**, a determination is made by the safety circuit that a transmission amount of sensor radiation from the sensor emitter reaching the sensor receiver has fallen by at least a programmed threshold amount during the cooking session, due to smoke in the cooking interior area. Responsive to the determination, the cooking element of the microwave oven, is caused by the safety circuit to be no longer supplied with electrical power. The exemplary safety circuit may use the smoke point of oil or similar food products as the basis for its threshold amount, so that normal smoke emitted during the cooking or heating of food or beverages will not cause the infrared sensor **326** to deactivate cooking operation. The

exemplary infrared sensor **326** would not require interaction from the microwave user. The exemplary safety sensor may be operative to cause an initial transmissivity level of sensor radiation that reaches the sensor receiver from the sensor emitter early in the cooking session to be stored in a memory associated with the safety circuit. The determination of a level of smoke corresponding to a dangerous condition is made in this embodiment responsive to the transmission amount of sensor radiation reaching the sensor receiver dropping by the threshold amount from the initial transmissivity level during the cooking session.

Referring to FIG. **25**, in another exemplary embodiment, the safety sensor or safety circuit may comprise a light sensor **334**, which detects the increase smoke density within the microwave's cooking area which is alternatively referred to as a cavity. The light sensor **334** may also include a sensor emitter and sensor receiver. The light sensor **334** may be provided in the microwave cavity **332** and may operate as follows. At the beginning of a cooking cycle, all of the light generated travels through the clean air to the light sensor **334**. As smoke increases in density, the amount of light that travels to the sensor receiver is reduced. The circuitry of light sensor **334** includes a programmed trip point or threshold that corresponds to the reduced amount of light sensed caused by the amount of smoke, that is indicative of a dangerous condition. When the trip point is reached, the safety circuit causes the electrical power to the radiation emitting element to be turned off. A determination would be made based on the amount of smoke that corresponds to the trip point and its corresponding light sensor reading.

Referring to FIG. **26**, in another exemplary embodiment, the safety sensor may include an optical motion sensor **336**. The optical motion sensor **336** may also include a sensor emitter and sensor receiver. The optical motion sensor **336** may be positioned in the microwave cavity **332** at air exhaust vents **338**, **340** of the microwave. The optical motion sensor **336** detects motion which is sensed due to the presence of smoke blown by an exhaust fan **342** of the microwave oven **2**. The exhaust fan **342** is operative to cause air to move in an air passage connected to the microwave cavity. The sensor emitter and sensor receiver are operative to sense the transmission of radiation between the emitter and the receiver in the air passage. The optical motion sensor **336** has a trip point or threshold that corresponds to the presence of smoke of a predetermined density that corresponds to a reduced level of transmission that is indicative of a dangerous condition. When the trip point is reached, the optical motion sensor causes the cooking element of the microwave oven to be turned off. It should be noted that the exemplary optical motion sensor would not be positioned within the microwave cavity and directed toward a turntable therein, since the turntable itself may result in false alarms in some configurations.

Multiple sensors supported by control circuitry and associated algorithms may be used to determine the optimal point for removing electrical power from a microwave cooking element using sensed parameters that may include for example humidity, temperature rise and gas generated including combinations of absolute and relative values to analyze varied conditions. Other types of sensors may include flame sensors. Safety circuitry comprising flame sensors may detect and respond to the presence of a flame or fire. Upon the flame sensor detecting the presence of a flame, the flame sensor causes the cooking element of the microwave oven to turn off. The flame sensor may take the form of an optical flame sensor. The flame sensor may be of the type that utilizes ionization current flame detection. Alternatively, the flame sensor may be of the type that utilizes thermocouple flame detection.

Alternatively or in addition, the fault indicator **230** may be coupled to the controller **104** or other circuitry to indicate that there is a dangerous condition upon detection by any of the infrared sensor **326**, light sensor **334**, optical motion sensor **336**, or flame or fire sensor in the embodiments described above. For example, the fault indicator **230** may be a buzzer that is activated in response to the safety sensor **226** sensing polluted air indicative of a dangerous condition. In another example, fault indicator **230** may include the display **124** displaying a fault message such as "E-1" in response to the safety sensor **226** detecting polluted air indicative of a dangerous condition.

Exemplary embodiments may include a combination of fault indicators. For example, upon the trip point or threshold value being reached by any of the infrared sensor **326**, light sensor **334**, or optical motion sensor **336**, a shutdown signal is outputted by the sensor **226** to the controller **104**. Upon receiving the shutdown signal, the controller **104** determines that the cooking element of the microwave oven **2** should be shut down and causes the microwave oven **2** to shutdown. In addition, a buzzer is activated and the display **124** displays a fault message such as "E-1" in response to the sensor **226** sensing polluted air indicative of a dangerous condition.

The smoke sensor, infrared sensor **326**, light sensor **334**, or optical motion sensor **336**, may be reset automatically upon the sensor not detecting gas or other parameter indicative of the dangerous condition. Alternatively or in addition, the sensor may be reset upon circuitry sensing opening of the microwave door **9** of the microwave oven **2**. The display may display a "bar" or other suitable icon to indicate that the sensor is turned on. Numerous types of suitable safety sensors may also be used instead of the alcohol sensor to detect a dangerous condition.

As shown in FIGS. **15**, **16** and **27**, the front control panel **22** of the microwave oven **2** may include Universal Serial Bus (USB) ports **232**, **234** for connection, communication, and power supply between the front control panel **22** and electronic devices such as a personal computer, cell phone, Ipod®, Ipad®, or other suitable device to allow communication and/or charging of the electronic device plugged into the USB ports. In one exemplary embodiment, a first USB port **232** may be provided on the upper portion **236** of the front control panel **22**, and a second USB port **234** may be provided on the lower portion **238** of the front control panel **22** above the auxiliary outlets **111**, **112** and between the reset buttons **113**, **114** as seen in FIG. **15**. The first USB port **232** may be operatively connected to a three ampere fuse and a linear time-variant system (LVT) of 100 mA, 120 volts, and 12 watts. The second USB port **234** may be operatively connected to a linear time-variant system (LVT) of 200 mA, 120 volts, and 24 watts. The second USB port **234** may also be reset. The current sensor **118** may be constructed to limit the second USB port and the two auxiliary outlets to 12 amps. The USB ports **232**, **234** may be in operative connection with respective printed circuit boards. Alternatively, as represented in FIG. **27**, instead of auxiliary outlet **111**, another USB port **237** may be provided on the front panel **22** at the location of the auxiliary outlet **111**. Alternatively or in addition, one or more USB ports may be provided on the rear of the microwave oven, the sides of the microwave oven, and/or the top or bottom of the microwave oven. Alternatively or in addition, one or more auxiliary outlets may be provided on the rear of the microwave oven, the sides of the microwave oven, and/or the top or bottom of the microwave

oven. Alternatively, the refrigerator outlet may be provided on the top, bottom, or one of the sides of the microwave oven.

FIGS. **17** and **18** show another exemplary arrangement of the USB ports **232**, **234**. In this arrangement, the first and second USB ports **232**, **234** are located side by side on the lower portion **238** of the front control panel **22** above the auxiliary outlets **111**, **112**. The USB ports **232**, **234** are also located rightwardly (as viewed in FIG. **17**) adjacent a status LED indicator and reset button **240**. In this exemplary arrangement, current sensor **218** is connected to monitor the combined current in the USB ports **232**, **234** and the auxiliary outlets **111** and **112**. The current sensor **218** is constructed to limit the combined current in the USB ports and auxiliary outlets **111** and **112** to 12 amperes. The LED indicator and reset button **240** may illuminate when power to the auxiliary outlets **111**, **112** and the USB ports **232**, **234** is available and flash when disabled. In another embodiment, the LED indicator and reset button **240** may be off when power to the auxiliary outlets **111**, **112** and the USB ports **232**, **234** is available and illuminate or flash when disabled. In an exemplary arrangement, depressing the LED indicator and reset button **240** enables the auxiliary outlets **111**, **112** and the USB ports **232**, **234** so that power may be supplied to them when the combined current in them falls from above to below the limit.

FIGS. **19** and **20** show an alternative arrangement in which one USB port **234** is located above the auxiliary outlets **111**, **112** and rightwardly adjacent the status LED indicator and reset button **240**. In this exemplary arrangement, the current sensor **218** is connected to monitor the combined current in the USB port **234** and auxiliary outlets **111** and **112**. The current sensor **218** is constructed to limit the combined current in the USB port **234** and auxiliary outlets **111** and **112** to 12 amperes. Alternatively, the current sensor **218** may be constructed to limit the combined current in the USB port **234** and the auxiliary outlets **111** and **112** to 13 amperes. The LED indicator and reset button **240** may illuminate when power to the auxiliary outlets **111**, **112** and the USB port **234** is available and flash when disabled. In another embodiment, the LED indicator and reset button **240** may be off when power to the auxiliary outlets **111**, **112** and the USB port **234** is available and illuminate or flash when disabled. In an exemplary arrangement, depressing the LED indicator and reset button **240** enables the auxiliary outlets **111**, **112** and the USB port **234** so that power may be supplied to them when the combined current in them falls from above to below the limit. Other elements of the embodiments of FIGS. **17-20** may be similar in structure and function as the embodiment shown in FIGS. **1-11**. Thus, the same reference numbers may be used to indicate elements that are similar to those in the embodiments shown in FIGS. **1-11**.

FIG. **21** shows the rear portion **244** of the microwave oven for the embodiments shown in FIGS. **12-20**. Refrigerator outlet **15** is shown to be provided on and accessible from the rear portion **244** of the microwave oven and is associated with the LED indicator and reset button **214**, which is also provided on the rear portion **244** of the microwave oven. FIG. **22** is a similar view as FIG. **21** except that AC cord **8** for the microwave oven is shown.

In the embodiments shown in FIGS. **12-22**, logic flow control models may be established for execution by the controller which is also referred to as at least one control circuit **4**. These models can be in the form of processor executable instructions stored in a computer readable medium, such as software or firmware within the control circuit **104**. The models or scenarios are, in the first instance, dependent on the state of operation of the microwave oven **2**. The current demands of the microwave oven **2** are generally the most significant contribution to overload. To avoid overload conditions, power to the low power receptacles or auxiliary outlets, refrigerator receptacle, and/or USB ports is disabled during microwave operation.

FIG. **23** shows a flow chart illustrating several control models or scenarios. The control circuit **104** begins by determining whether the microwave oven is turned on or operating to perform cooling in step **246**. When the microwave oven is turned on and operating to perform cooking, the rear refrigerator outlet **15**, the two auxiliary outlets **111**, **112** on the front control panel **22**, and the two USB ports **232**, **234** on the front control panel are all turned off or disabled, so that the total draw of current for the combination microwave and refrigerator is not over 15 amperes as indicated in step **248**.

When the microwave oven is not drawing cooking power and items are plugged into the two USB ports **232**, **234**, two auxiliary outlets **111**, **112**, and rear refrigerator outlet **15**, then the control circuit **104** determines whether the refrigerator outlet **15** is drawing less than 2 amperes (approximately the average amperes when the refrigerator compressor is running) in step **250**. If the refrigerator outlet **15** is drawing less than 2 amperes, then all the outlets **15**, **111**, **112** and USB ports **232**, **234** are caused to be enabled, so that power may be supplied through them as indicated in step **252**. If the refrigerator outlet **15** not drawing less than 2 amperes, the control circuit **104** determines whether the refrigerator outlet **15** is drawing less than 14 amperes in step **254**. If the refrigerator outlet **15** is drawing less than 14 amperes but not less than or greater than or equal to 2 amperes, then the auxiliary outlets **111**, **112** and USB ports **232**, **234** are disabled or turned off so that no power may be supplied to them as indicated in step **256**. The refrigerator outlet **15** remains enabled. If the refrigerator outlet **15** is not drawing less than 14 amperes or drawing greater than or equal to 14 amperes, then the refrigerator outlet **15** is disabled in step **258**. This may be accomplished by tripping the relay **20** of the reset circuit off. In addition, the red LED light on the LED indicator and reset button **214** is turned on to identify the disabled condition of the refrigerator. Then, in step **260**, the auxiliary outlets **111**, **112** and USB ports **232**, **234** are enabled so that power may be supplied through them.

Then, the control circuit determines whether the refrigerator outlet **15** is drawing less than 14 amperes in step **262**. If the refrigerator outlet **15** is not drawing less than 14 amperes or drawing greater than or equal to 14 amperes, then the refrigerator outlet **15** remains disabled and the red LED light on the LED indicator and reset button **214** remains turned on to identify the disabled condition of the refrigerator **3**. This condition may occur, for example, if an electrical heater is plugged into the refrigerator outlet **15**. When the refrigerator outlet **15** draws less than 14 amperes resulting from the overload condition being eliminated, the refrigerator outlet **15** will be enabled by the control circuit so that power may supplied to the refrigerator outlet **15** upon the LED indicator and reset button **214** being depressed as indicated in step **264**. Depression of the LED indicator and reset button **214** in this condition will also turn off the red LED light. The process then ends. It should be noted that the at least one control circuit **104** can make the determination in steps at the same time or in a different order.

Although exemplary embodiments are described herein as used in conjunction with vapor compression refrigerators,

embodiments employing the principles described herein may also be used with other types of refrigerators. Such refrigerators may include refrigerators that use thermoelectric cooling, such as Peltier elements to provide cooling. Other embodiments may include absorption refrigerators to provide cooling. In such embodiments the components of the refrigerator apparatus which draw electrical power, are controlled through operation of at least one control circuit, to prevent, suspend or defer the operation thereof at times when the microwave radiation emitting element of other components that draw electrical power are to be operated, so as to avoid exceeding a maximum threshold for current draw for the combined appliance that is permitted by the at least one control circuit.

It should be understood that the above description is only illustrative of the exemplary embodiments. Various alternatives and modifications can be devised by those skilled in the art without departing from the exemplary embodiments. Accordingly, the present application is intended to embrace all such alternatives, modifications and variances which fall with the scope of the appended claims.

What is claimed is:

**1**. Apparatus comprising:

a microwave oven,

wherein the microwave oven includes:

a radiation emitting microwave element,

a microwave housing, wherein the microwave housing bounds a cooking interior area, wherein the radiation emitting microwave element is operative to irradiate the cooking interior area,

at least one power control circuit, wherein the at least one power control circuit is operative to cause

electrical power to be selectively delivered to the microwave element,

wherein the microwave oven further includes at least one sensor emitter and at least one sensor receiver configured to receive radiation from the at least one sensor emitter, wherein air of at least a portion of the cooking interior area extends intermediate of the at least one sensor emitter and the at least one sensor receiver,

at least one sensor circuit, wherein the at least one sensor circuit is in operative connection with the at least one sensor emitter, the at least one sensor receiver, and the microwave element,

wherein the at least one sensor circuit is operative to cause the at least one sensor emitter to emit sensor radiation and the at least one sensor receiver to sense sensor radiation from the at least one sensor emitter while the microwave element operates during a current cooking session,

data to be stored in a memory associated with the at least one sensor circuit corresponding to an initial transmissivity level of transmitted radiation from the at least one sensor emitter that reaches the at least one sensor receiver early in the current cooking session,

comparison of a current level of transmitted radiation during the current cooking session and the initial transmissivity level,

a determination based on the stored data that the current level of transmitted radiation from the at least one sensor emitter that reaches the at least one sensor receiver has fallen by at least a threshold amount from the initial transmissivity level during the current cooking session, due to smoke in the cooking interior area,

responsive at least in part to the determination, the microwave element to no longer be supplied with electrical power to prematurely end the current cooking session,

wherein the at least one sensor circuit is configured to reset after the premature end of the current cooking session responsive to the at least one sensor circuit, so that the at least one sensor circuit is operative to cause the radiation emitting microwave element to be allowed to be supplied with electrical power during a next subsequent cooking session.

**2**. The apparatus according to claim **1**

wherein the microwave oven housing includes a fan, and at least one air passage,

wherein the at least one air passage is in connection with the cooking interior area,

wherein the fan is operative to cause air to move in at least one air passage,

wherein the at least one sensor emitter and the at least one sensor receiver are operative to sense the transmission amount in the at least one air passage.

**3**. The apparatus according to claim **1** further including

a power supply outlet, wherein the power supply outlet is provided on the microwave oven,

wherein the power supply outlet is configured to receive an electrical connection to an appliance having lower power requirements than power requirements of the microwave oven,

wherein the at least one power control circuit is operative to cause electrical power to be selectively delivered to the microwave element, and the power supply outlet, wherein the power supply outlet does not operate when the microwave element operates.

**4**. The apparatus according to claim **1** and further comprising:

a power supply outlet provided on the microwave oven, wherein the power supply outlet is in operative connection with the at least one power control circuit,

a refrigerator configured to be connected to the power supply outlet,

wherein the refrigerator includes a refrigerator housing, wherein the refrigerator housing bounds a cooled refrigerator interior area, wherein the refrigerator housing is in fixed operative connection with the microwave housing, wherein the refrigerator includes a refrigerant compressor, wherein the refrigerant compressor is operative to compress refrigerant material, wherein the refrigerant is operative to cause cooling of the cooled refrigerator interior area,

wherein the at least one power control circuit is configured to:

disable refrigerator operation by not supplying electrical power to the compressor thereof, when the microwave element draws cooking power;

enable refrigerator operation by supplying electrical power to the compressor when the microwave element does not draw cooking power.

**5**. The apparatus according to claim **4**, and further including a remote control, wherein the remote control is configured to control at least one operation of the refrigerator or the microwave oven, or an operation of each of the refrigerator and the microwave oven.

**6**. The apparatus according to claim **5**, wherein the remote control comprises a mobile phone.

**7**. The apparatus according to claim **4**, and further comprising at least one Universal Serial Bus (USB) port,

wherein the at least one USB port is positioned on at least one of the refrigerator and the microwave oven.

**8**. The apparatus according to claim **4** and further including a temperature sensor in the cooking interior area, wherein the temperature sensor is in operative connection with the at least one sensor, and wherein the at least one power control circuit is operative to cause the microwave element to no longer be supplied with cooking power to prematurely end the current cooking session responsive to the determination and the temperature being sensed above a temperature level during the current cooking session.

**9**. An apparatus comprising:

a microwave oven configured to be connected to a source of electrical power and having a control circuit, wherein the control circuit is configured to control operation of the microwave oven;

a smoke sensor, wherein the smoke sensor is positioned in the microwave oven, and is in operative connection with the control circuit, wherein the smoke sensor is configured to cause cooking power to the microwave oven to be withdrawn prior to a set end time of a current cooking session upon the smoke sensor sensing smoke indicative of a dangerous condition; and

wherein the smoke sensor is configured to be reset after ending the current cooking session prior to the set end time based on sensing the smoke indicative of the dangerous condition, to enable the microwave oven to deliver cooking power in a next subsequent cooking session responsive at least in part to the smoke sensor no longer sensing the smoke indicative of the dangerous condition.

**10**. The apparatus according to claim **9** and further comprising:

a power supply outlet on the microwave oven,

wherein the power supply outlet is in operative connection with the control circuit,

a refrigerator,

wherein the refrigerator is electrically connected with the power supply outlet,

wherein the control circuit is operative to

withdraw electrical power from the refrigerator when the microwave oven draws cooking power,

deliver electrical power to the refrigerator when the microwave oven does not draw cooking power.

**11**. Apparatus comprising:

a microwave oven configured to be connected to a source of electrical power and having a control circuit configured to control operation of the microwave oven, wherein the microwave oven includes an interior area,

a smoke sensor, wherein the smoke sensor is positioned in the interior area, wherein the smoke sensor is in operative connection with the control circuit, wherein the smoke sensor is configured to cause cooking power to be withdrawn from the microwave oven prior to a set end time of a current cooking session responsive at least in part to the smoke sensor sensing at least one change in an amount of smoke sensed by the smoke sensor which at least one change corresponds to a dangerous condition, and

wherein the control circuit is configured to reset after ending the current cooking session prior to the set end time due to sensing the dangerous condition, to enable cooking power to again be available to the microwave oven in a next subsequent cooking session responsive at least in part to the smoke sensor no longer sensing the dangerous condition.

**12**. The apparatus according to claim **11** and further comprising:

a power supply outlet on the microwave oven,

a refrigerator configured to be connected to the source of electrical power by connection to the power supply outlet, wherein the refrigerator includes a compressor,

wherein the control circuit is operative to cause

electrical power to be unavailable to the compressor, when the microwave oven demands cooking power,

electrical power to be available to the compressor when the microwave oven does not demand cooking power.

* * * * *

# EXHIBIT 4

US009657974B2

(12) **United States Patent**
**Emma**

(10) **Patent No.: US 9,657,974 B2**
(45) **Date of Patent: *May 23, 2017**

(54) **MULTIPLE LINKED APPLIANCE WITH AUXILIARY OUTLET**

(71) Applicant: **Intirion Corporation**, Walpole, MA (US)

(72) Inventor: **Phillip Emma**, Topsfield, MA (US)

(73) Assignee: **Intirion Corporation**, Walpole, MA (US)

( * ) Notice: Subject to any disclaimer, the term of this patent is extended or adjusted under 35 U.S.C. 154(b) by 284 days.

This patent is subject to a terminal disclaimer.

(21) Appl. No.: **14/262,290**

(22) Filed: **Apr. 25, 2014**

(65) **Prior Publication Data**

US 2014/0251982 A1 Sep. 11, 2014

**Related U.S. Application Data**

(63) Continuation-in-part of application No. 12/317,632, filed on Dec. 23, 2008, now Pat. No. 8,742,304.

(60) Provisional application No. 61/009,419, filed on Dec. 28, 2007.

(51) **Int. Cl.**

| | |
|---|---|
| ***H05B 6/64*** | (2006.01) |
| ***H05B 6/66*** | (2006.01) |
| ***H05B 6/68*** | (2006.01) |
| ***F25B 29/00*** | (2006.01) |

(52) **U.S. Cl.**
CPC ..... ***F25B 29/00*** (2013.01); ***H05B 6/68*** (2013.01)

(58) **Field of Classification Search**
CPC . H05B 6/68; H05B 6/808; H05B 6/66; H05B 6/645; F25B 29/00
USPC ..... 219/482, 483, 485, 488, 679, 695, 702, 219/716, 717, 718, 723, 720, 715, 678
See application file for complete search history.

(56) **References Cited**

U.S. PATENT DOCUMENTS

| | | | | | |
|---|---|---|---|---|---|
| 4,763,015 | A * | 8/1988 | St. Louis | H02J 3/14 | 307/126 |
| 4,847,722 | A * | 7/1989 | Bennett | F25D 23/12 | 219/679 |
| 4,880,954 | A * | 11/1989 | Bennett | F25D 23/12 | 219/679 |
| 4,958,055 | A * | 9/1990 | Shim | F25D 23/12 | 219/679 |
| 5,521,359 | A * | 5/1996 | Bone | H05B 6/68 | 219/718 |
| 6,313,450 | B1 * | 11/2001 | Han | H05B 6/666 | 219/702 |
| 2004/0060932 | A1 * | 4/2004 | Chun | H05B 6/6435 | 219/714 |
| 2007/0262646 | A1 * | 11/2007 | Lee | H01R 13/6666 | 307/39 |

FOREIGN PATENT DOCUMENTS

JP 2001-33043 A * 2/2001

* cited by examiner

*Primary Examiner* — Hung D Nguyen
(74) *Attorney, Agent, or Firm* — Ralph E. Jocke; Walker & Jocke

(57) **ABSTRACT**

A combination microwave and refrigerator system is constructed having a single plug input supply. The microwave oven is adapted to provide power to a refrigerator, and to auxiliary receptacles adapted for low power operation. The current to the low power receptacles and the refrigerator is controlled by the controller for the microwave oven according to the duty cycles of the connected appliances to avoid overload conditions.

**22 Claims, 20 Drawing Sheets**

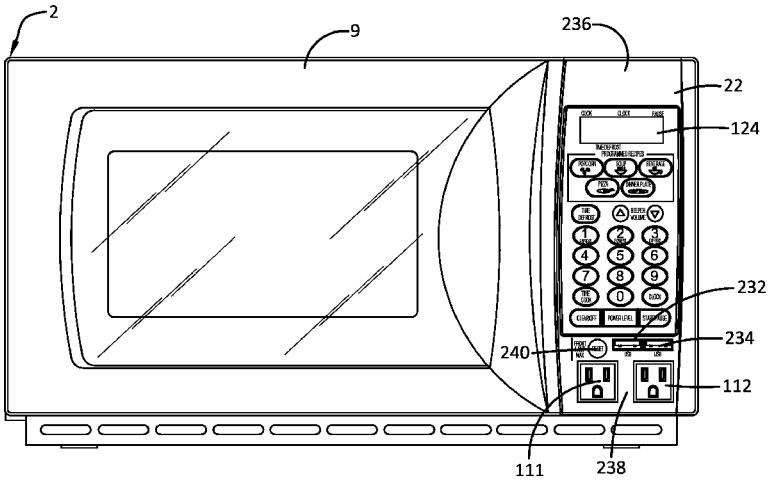

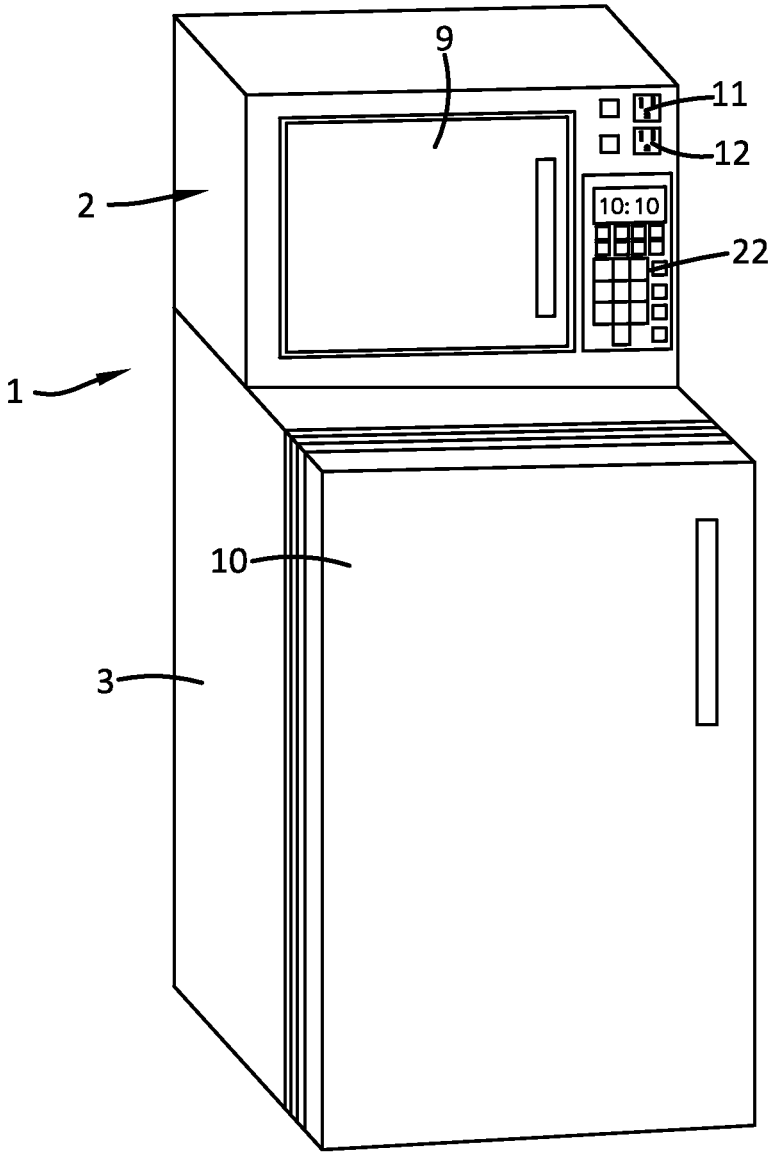


FIGURE 1

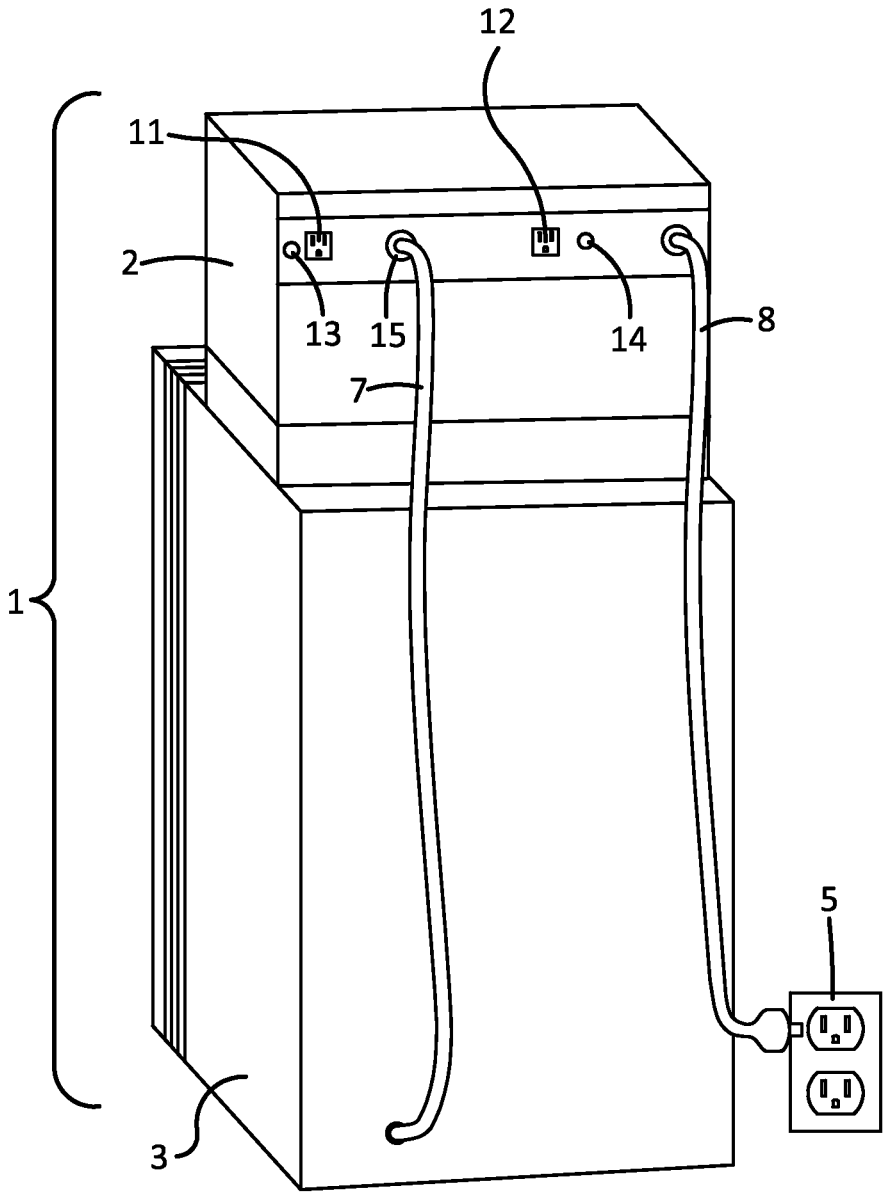


FIGURE 2

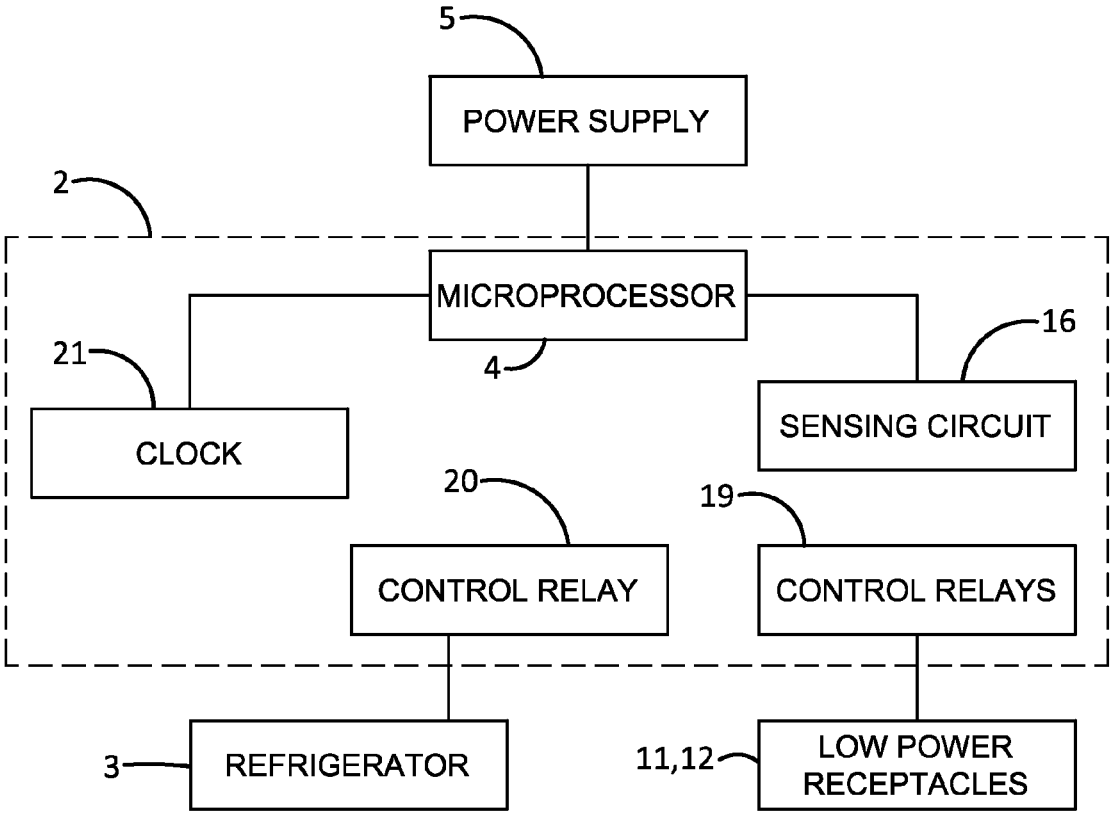
5
POWER SUPPLY
2
MICROPROCESSOR
4
21
CLOCK
16
SENSING CIRCUIT
20
CONTROL RELAY
19
CONTROL RELAYS
3
REFRIGERATOR
11,12
LOW POWER RECEPTACLES

FIGURE 3

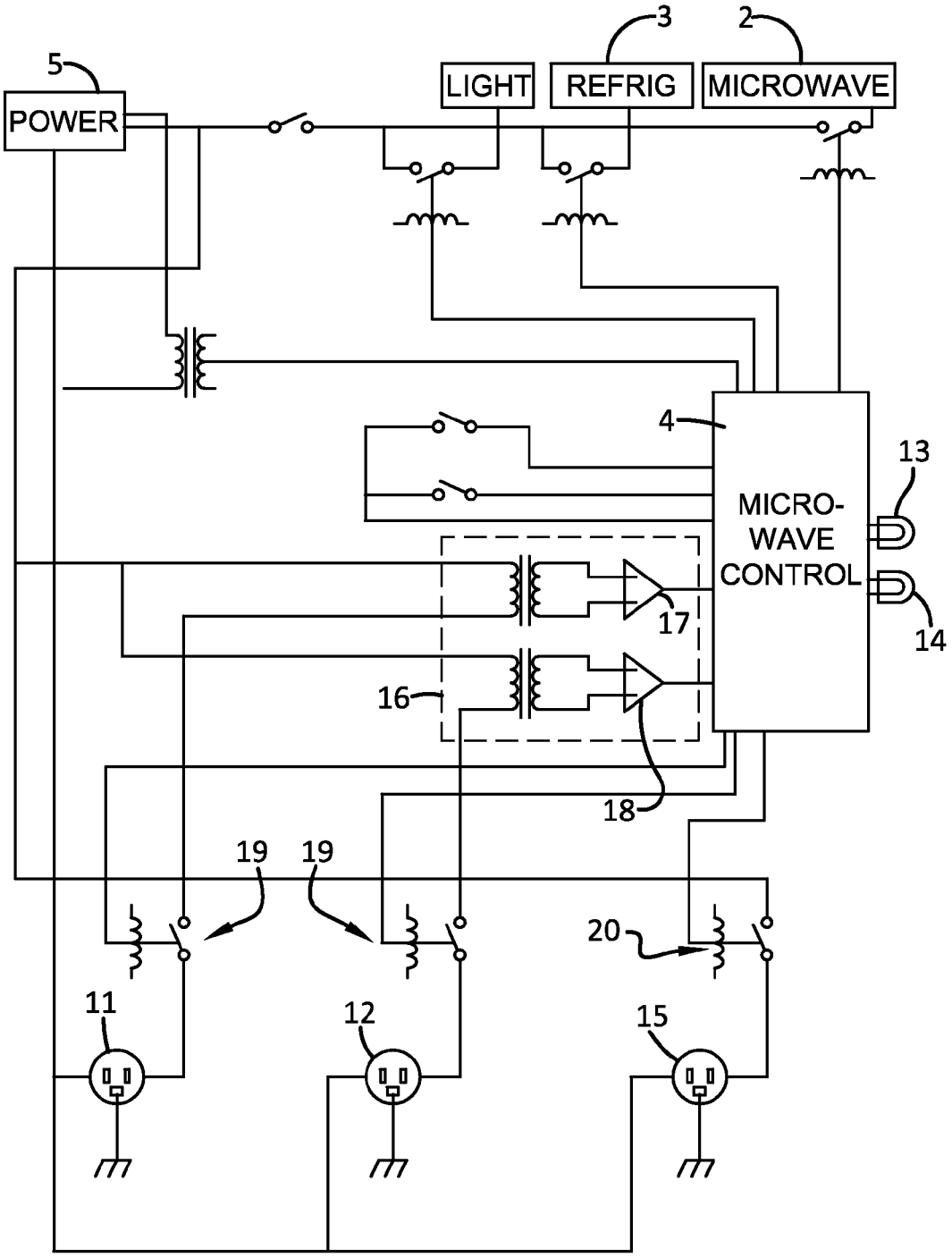
5
POWER
LIGHT
REFRIG
MICROWAVE
3
2
4
MICRO-
WAVE
CONTROL
13
14
17
16
18
19
19
20
11
12
15

FIGURE 4

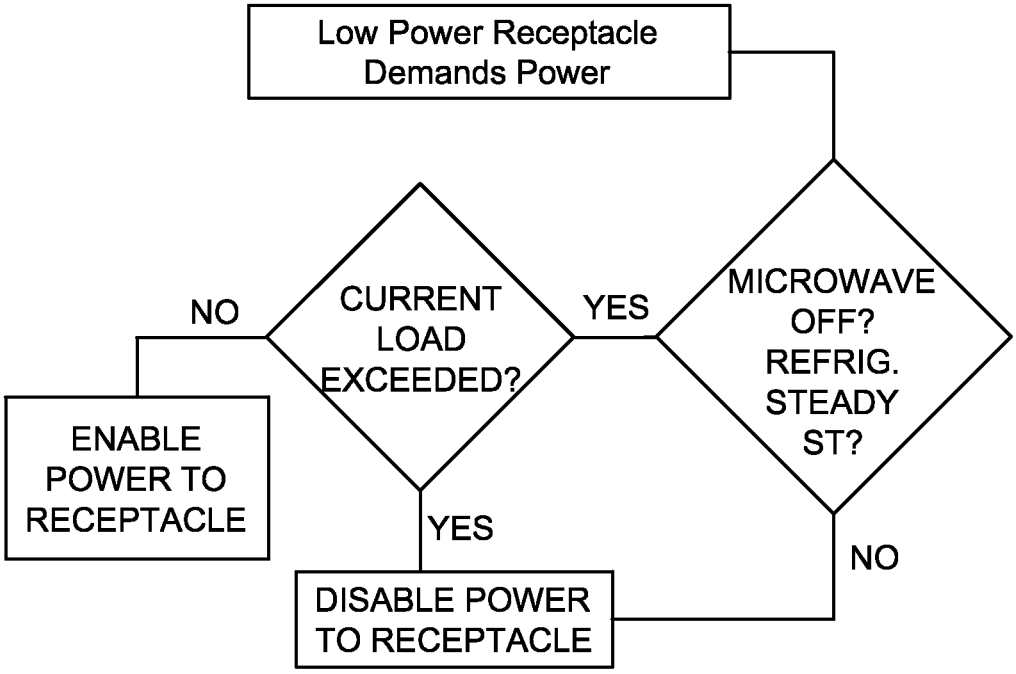


FIGURE 5

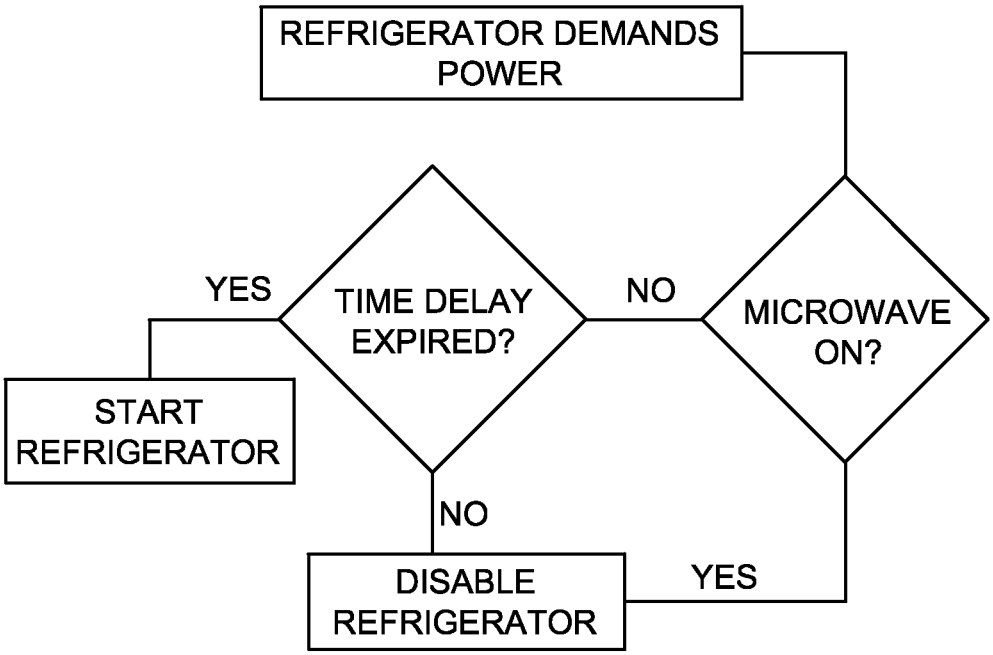


FIGURE 6

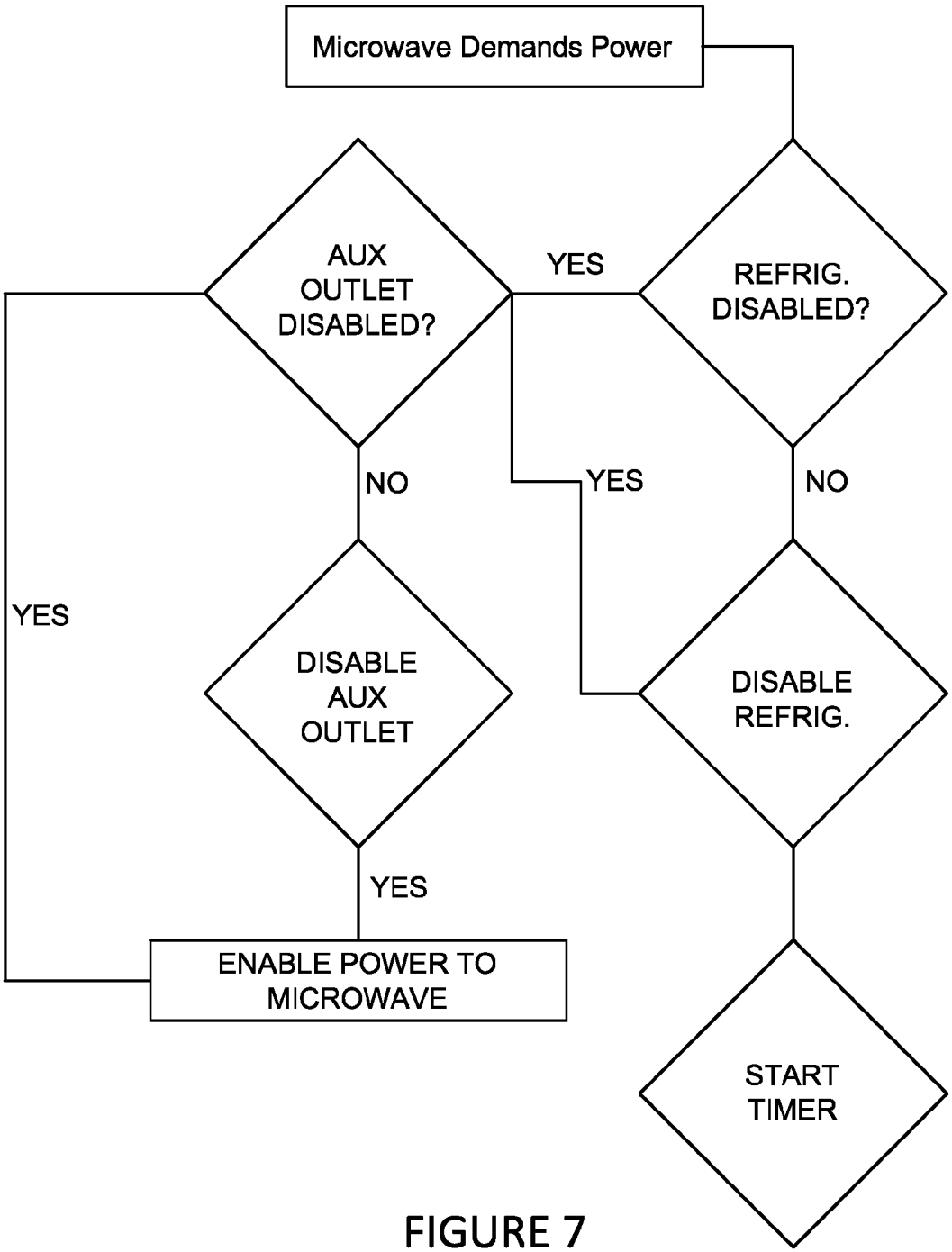
Microwave Demands Power
AUX OUTLET DISABLED?
YES
REFRIG. DISABLED?
NO
YES
NO
YES
DISABLE AUX OUTLET
DISABLE REFRIG.
YES
ENABLE POWER TO MICROWAVE
START TIMER

FIGURE 7

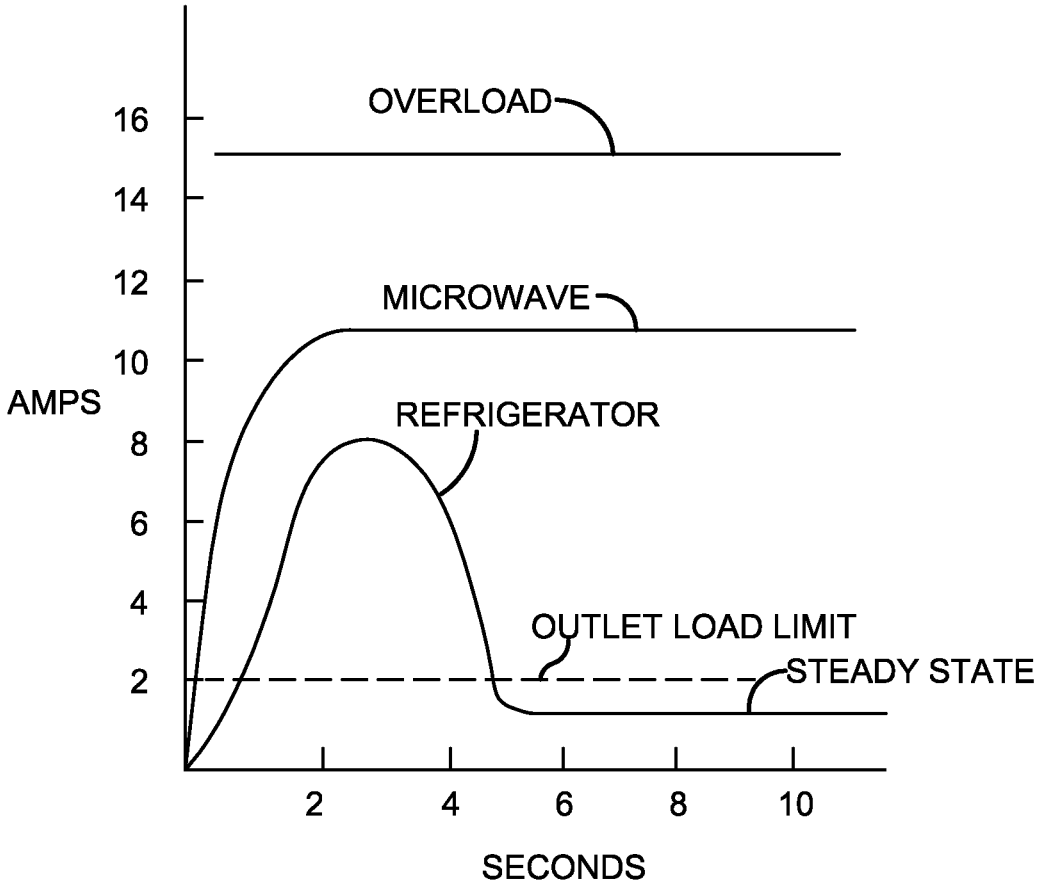
OVERLOAD
MICROWAVE
REFRIGERATOR
OUTLET LOAD LIMIT
STEADY STATE
AMPS
16
14
12
10
8
6
4
2
2
4
6
8
10
SECONDS

FIGURE 8

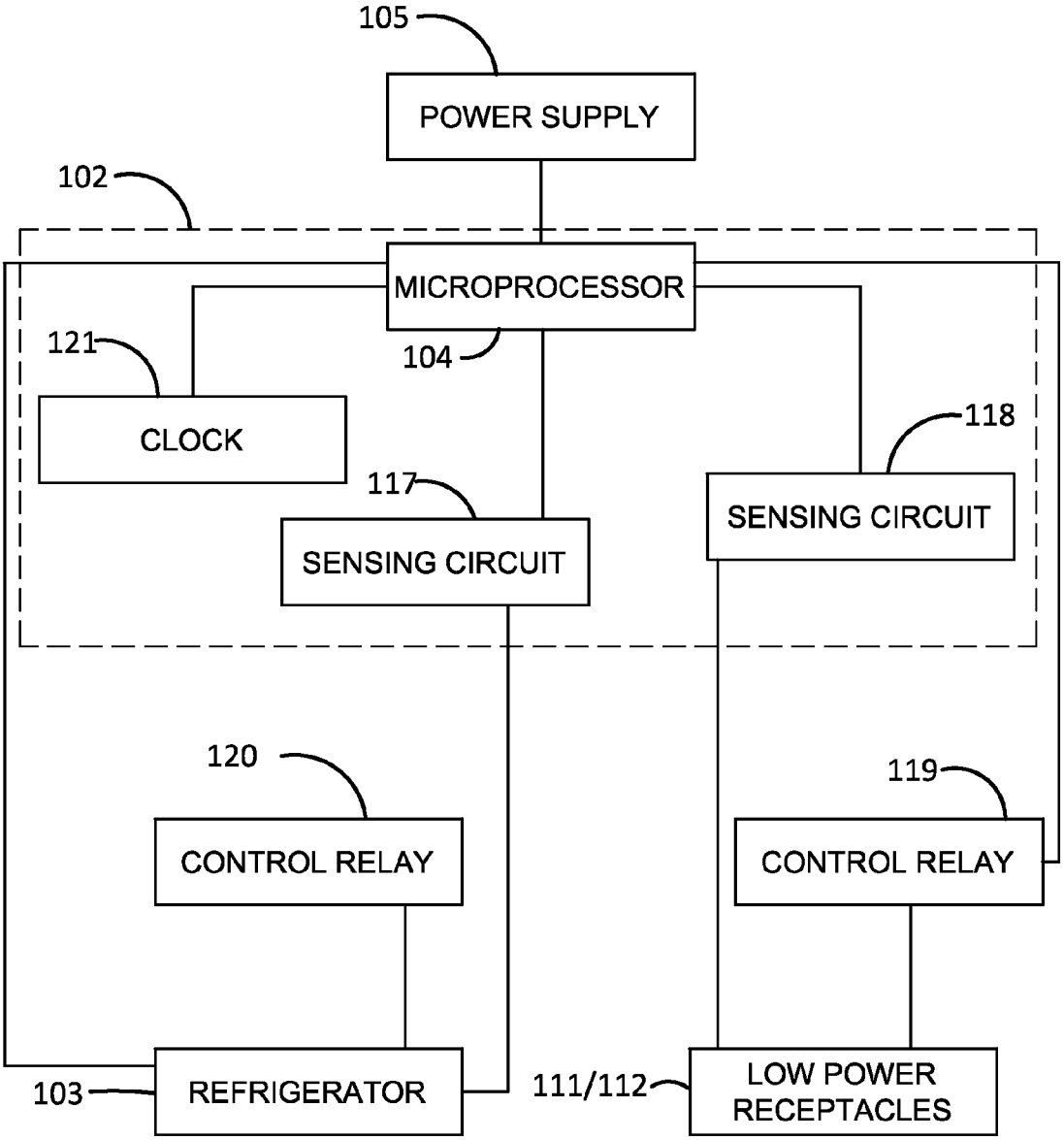
105
POWER SUPPLY
102
MICROPROCESSOR
121
104
CLOCK
118
117
SENSING CIRCUIT
SENSING CIRCUIT
120
119
CONTROL RELAY
CONTROL RELAY
103
REFRIGERATOR
111/112
LOW POWER RECEPTACLES

FIGURE 9

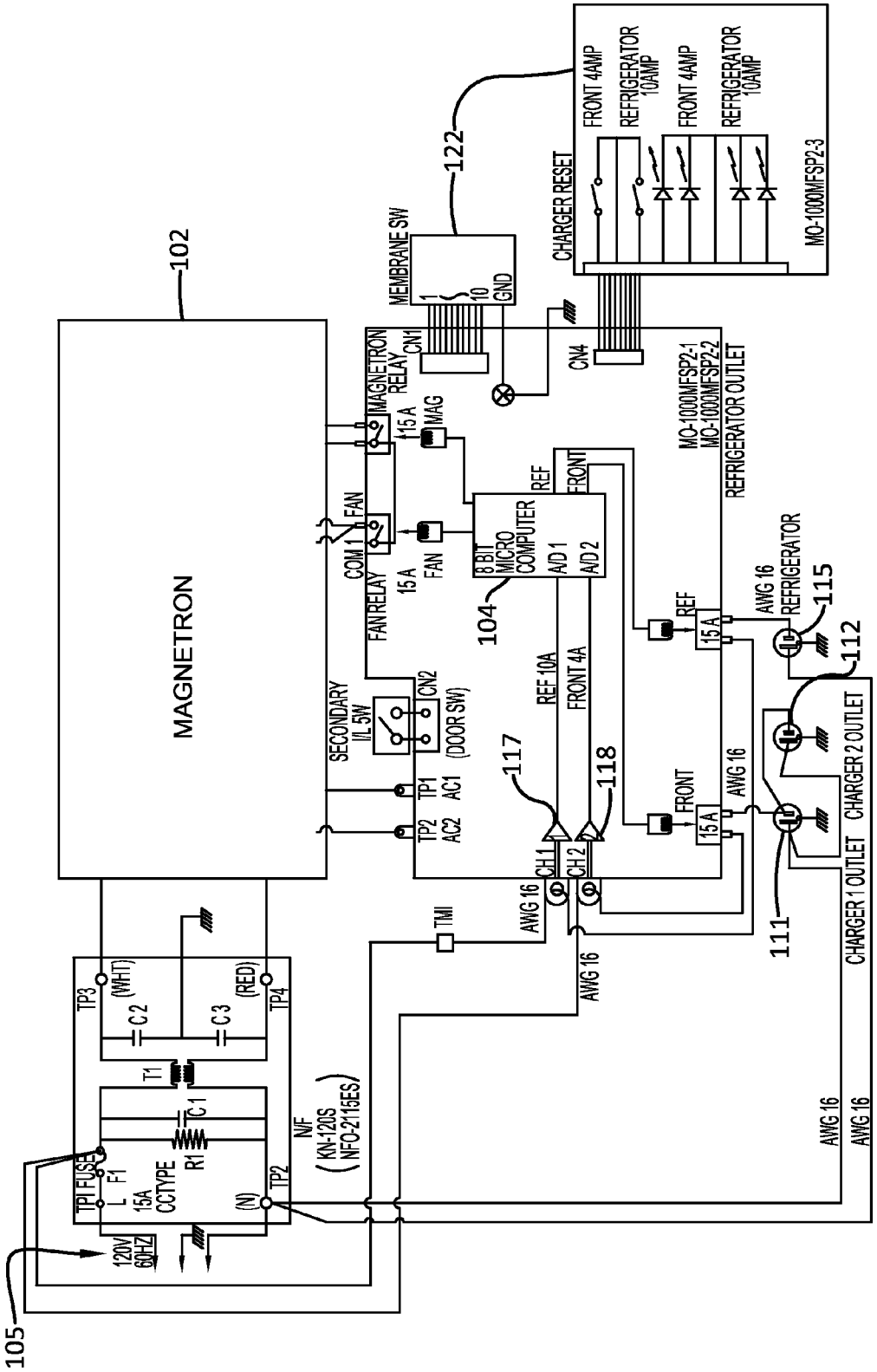
MAGNETRON
102
105
122
MEMBRANE SW
1
10
GND
CN1
CN4
CHARGER RESET
FRONT 4AMP
REFRIGERATOR 10AMP
FRONT 4AMP
REFRIGERATOR 10AMP
MO-1000MFSP2-3
MAGNETRON RELAY
15 A
MAG
FAN
COM 1
FAN RELAY
15 A
FAN
8 BIT MICRO COMPUTER
A/D 1
A/D 2
REF
FRONT
104
MO-1000MFSP2-1
MO-1000MFSP2-2
REFRIGERATOR OUTLET
SECONDARY I/L SW
CN2
(DOOR SW)
TP1
AC1
TP2
AC2
REF 10A
FRONT 4A
117
118
CH 1
CH 2
REF
15 A
FRONT
15 A
AWG 16
REFRIGERATOR
115
112
111
CHARGER 2 OUTLET
CHARGER 1 OUTLET
TMI
AWG 16
TP3
(WHT)
C 2
C 3
(RED)
TP4
T1
C 1
R1
TPI FUSE
L
F1
15A
CCTYPE
(N)
TP2
N/F
(KN-120S
NFO-2115ES)
120V
60HZ

FIGURE 10

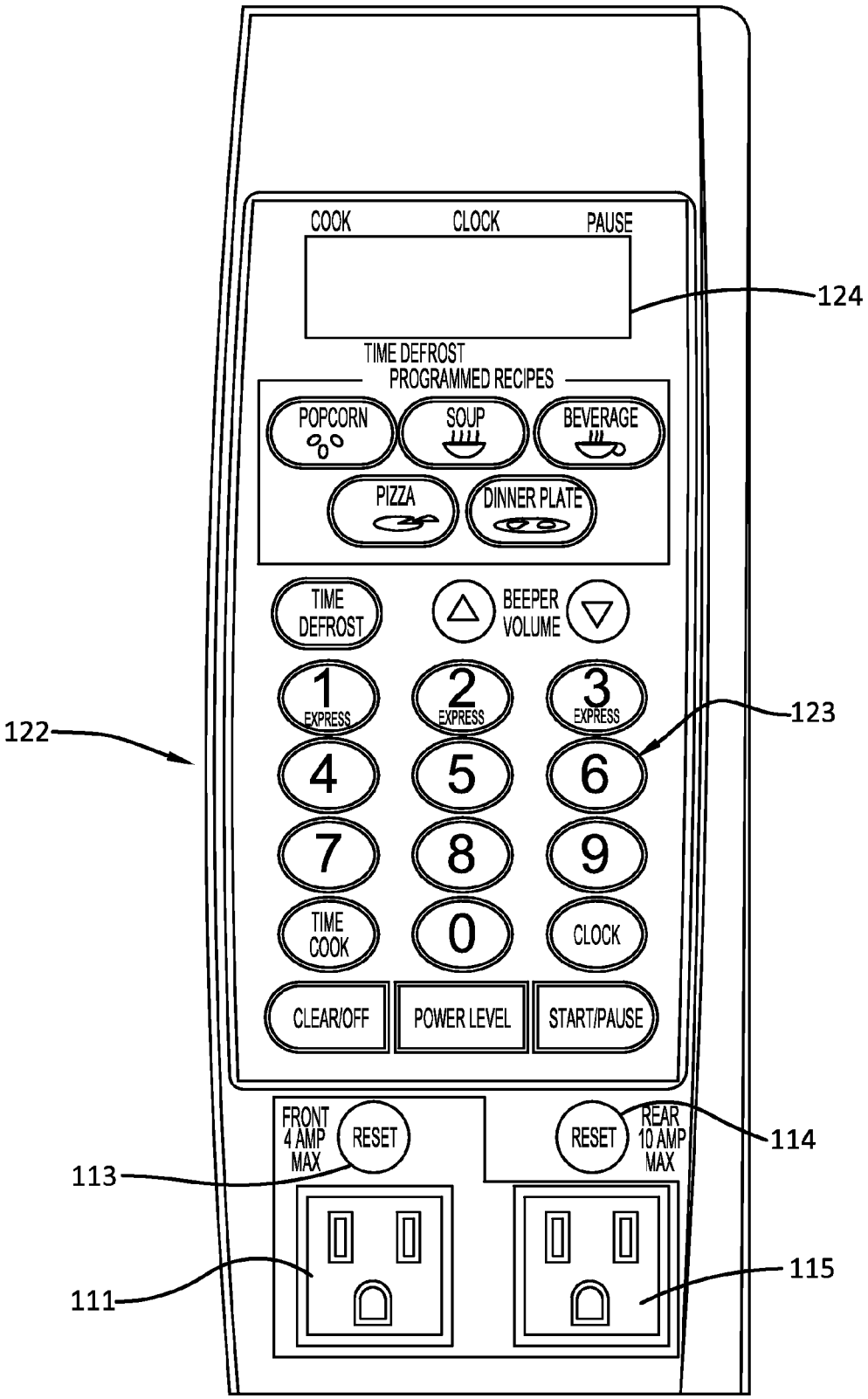
COOK
CLOCK
PAUSE
124
TIME DEFROST
PROGRAMMED RECIPES
POPCORN
SOUP
BEVERAGE
PIZZA
DINNER PLATE
TIME DEFROST
BEEPER VOLUME
1 EXPRESS
2 EXPRESS
3 EXPRESS
123
122
4
5
6
7
8
9
TIME COOK
0
CLOCK
CLEAR/OFF
POWER LEVEL
START/PAUSE
FRONT 4 AMP MAX
RESET
RESET
REAR 10 AMP MAX
114
113
111
115

FIGURE 11

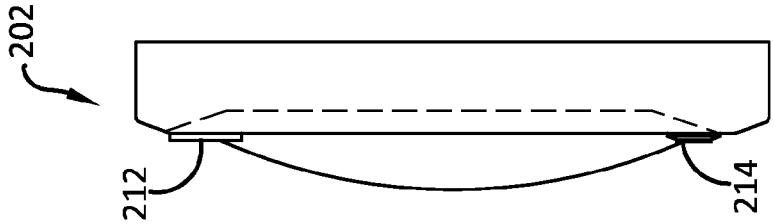


FIGURE 13

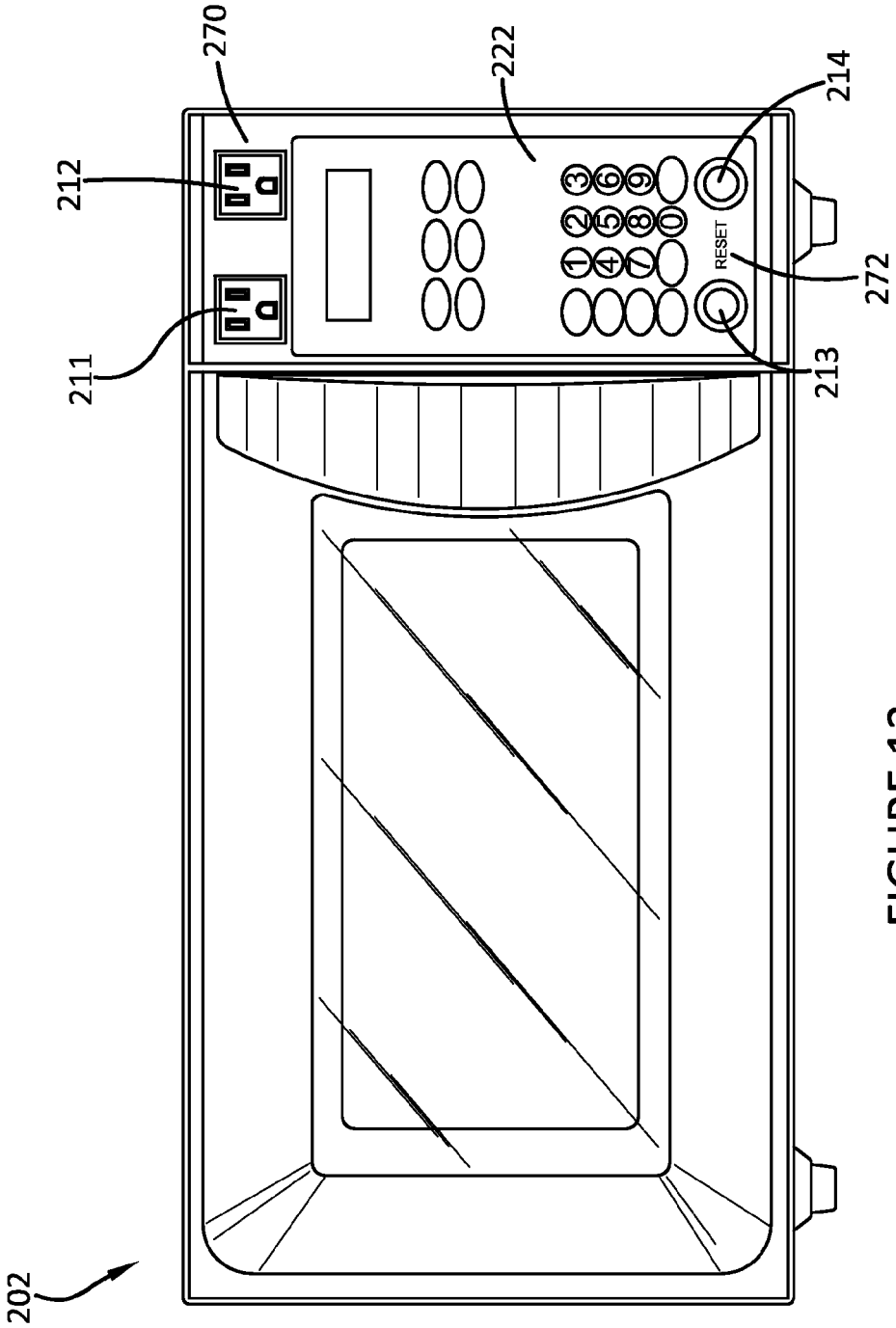


FIGURE 12

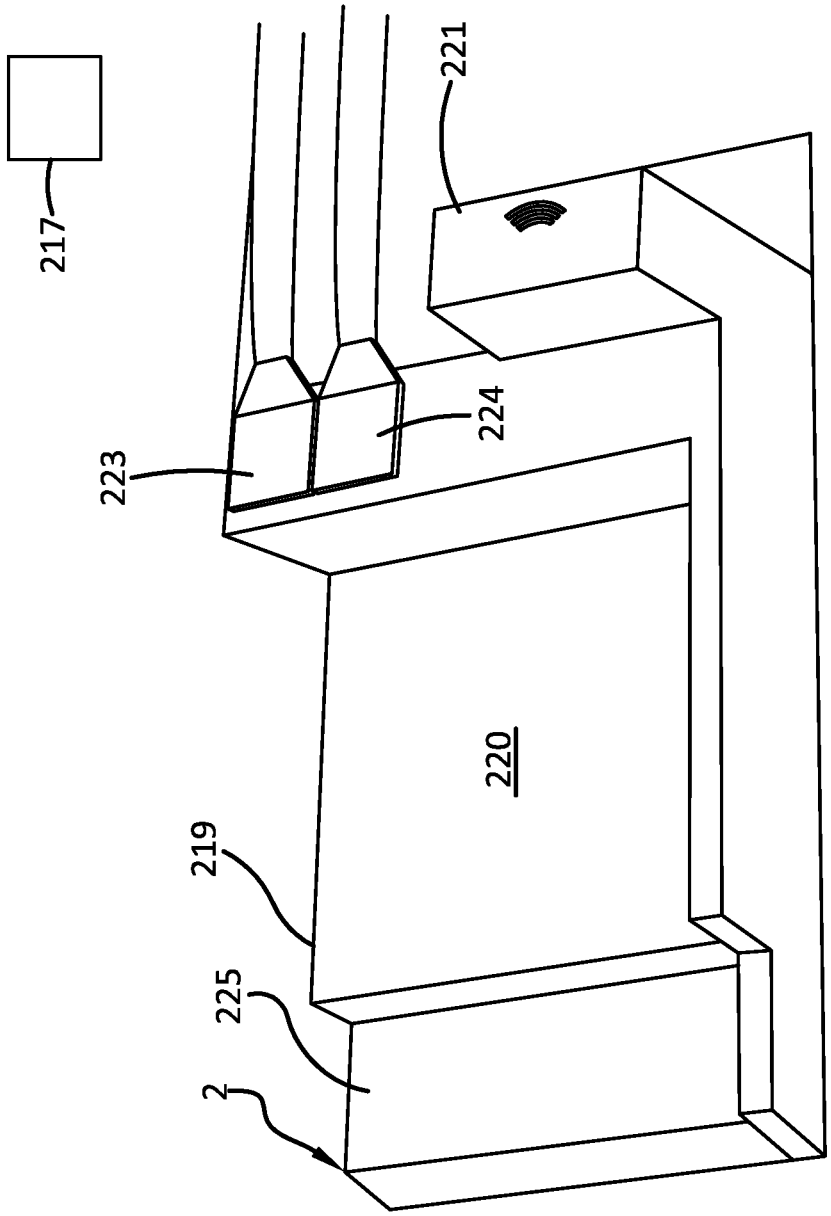


FIGURE 14

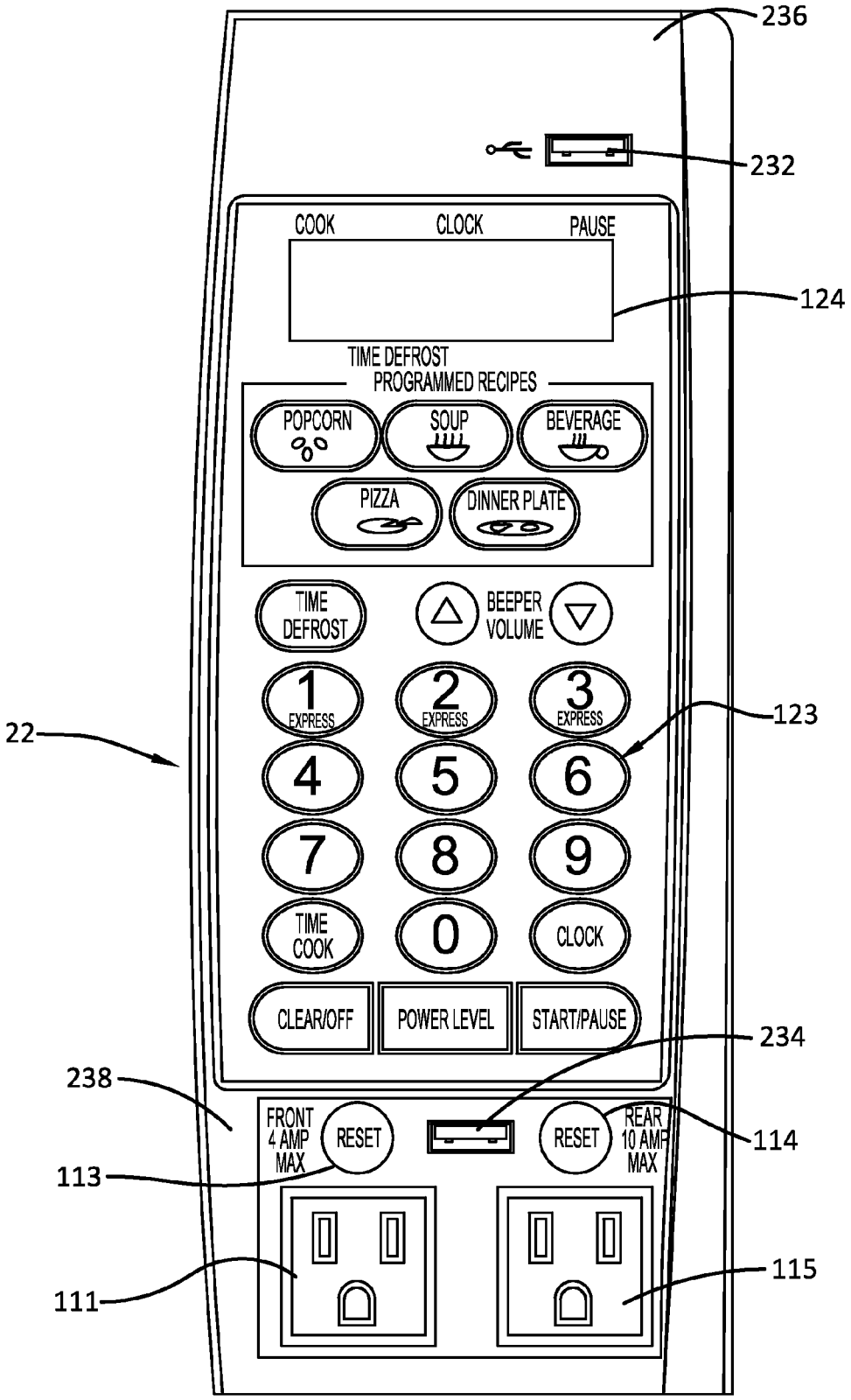
236
232
COOK
CLOCK
PAUSE
124
TIME DEFROST
PROGRAMMED RECIPES
POPCORN
SOUP
BEVERAGE
PIZZA
DINNER PLATE
TIME DEFROST
BEEPER VOLUME
1 EXPRESS
2 EXPRESS
3 EXPRESS
123
22
4
5
6
7
8
9
TIME COOK
0
CLOCK
CLEAR/OFF
POWER LEVEL
START/PAUSE
234
238
FRONT 4 AMP MAX
RESET
RESET
REAR 10 AMP MAX
114
113
111
115

FIGURE 15

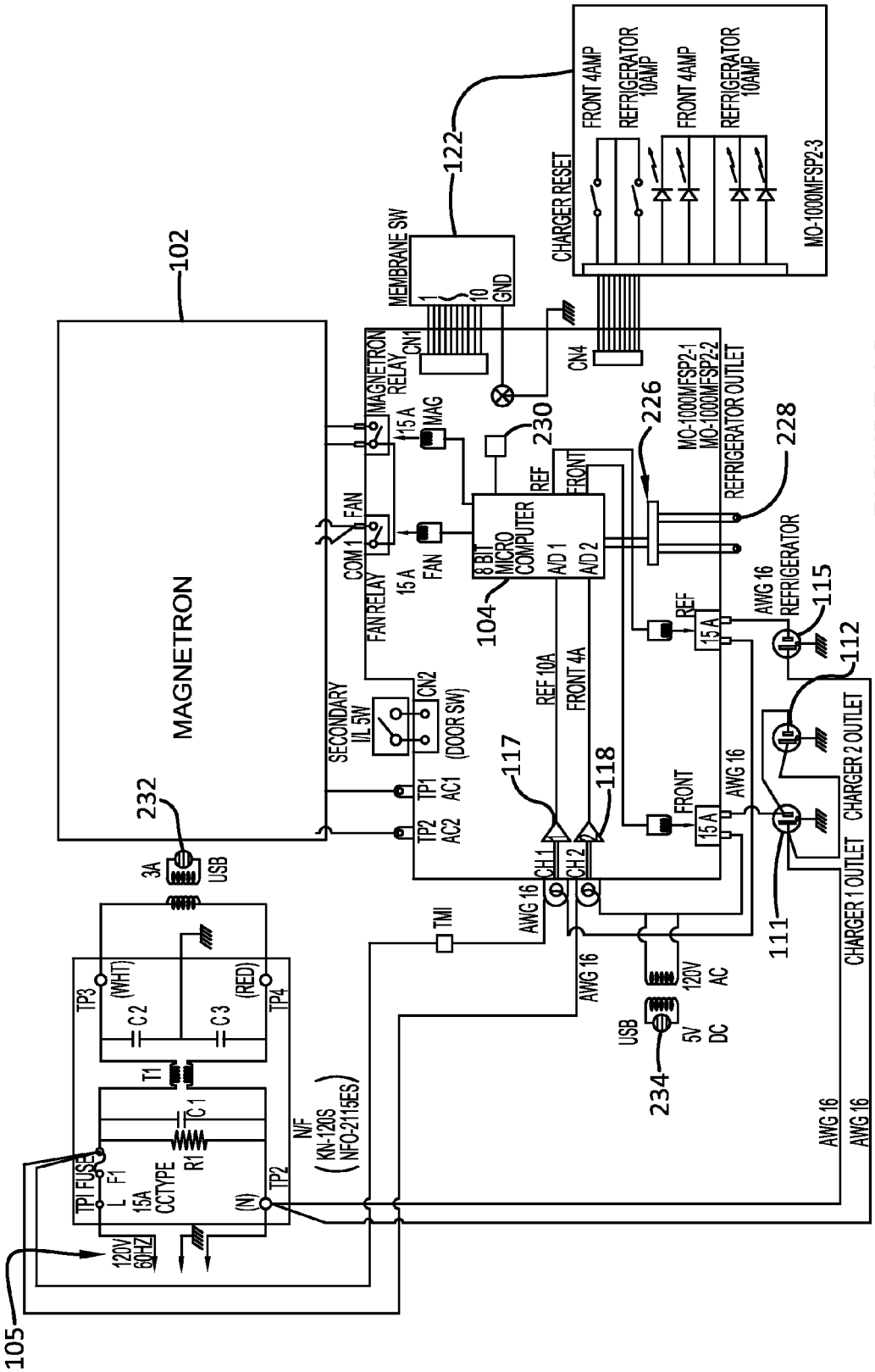
MAGNETRON
102
105
122
MEMBRANE SW
1
10
GND
CHARGER RESET
FRONT 4AMP
REFRIGERATOR 10AMP
FRONT 4AMP
REFRIGERATOR 10AMP
MO-1000MFSP2-3
CN1
CN4
MAGNETRON RELAY
15 A
MAG
230
226
228
MO-1000MFSP2-1
MO-1000MFSP2-2
REFRIGERATOR OUTLET
REF
FRONT
FAN
COM 1
FAN RELAY
15 A
FAN
8 BIT MICRO COMPUTER
A/D 1
A/D 2
104
REF
15 A
AWG 16
REFRIGERATOR
115
112
SECONDARY I/L 5W
CN2
(DOOR SW)
REF 10A
FRONT 4A
117
118
TP1
AC1
TP2
AC2
FRONT
15 A
AWG 16
CHARGER 2 OUTLET
CHARGER 1 OUTLET
111
232
3A
USB
CH 1
CH 2
AWG 16
TMI
AWG 16
120V
AC
USB
5V
DC
234
TP3
(WHT)
C 2
C 3
(RED)
TP4
T1
C 1
R1
TP1 FUSE
L
F1
15A
CCTYPE
(N)
TP2
N/F
(KN-120S
NFO-2115ES)
120V
60HZ
AWG 16
AWG 16

FIGURE 16

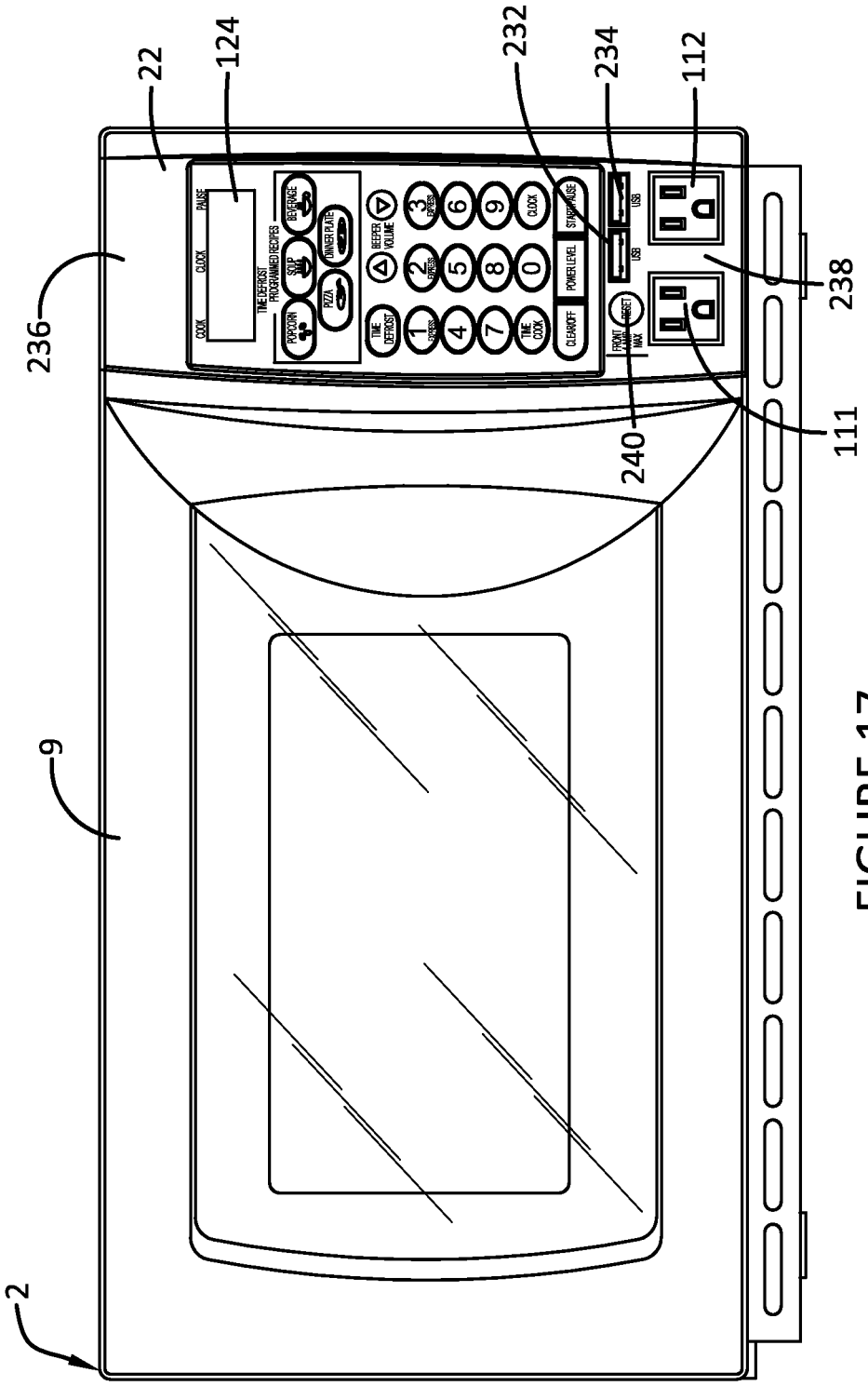
2
9
236
22
124
232
234
112
238
111
240
COOK
CLOCK
PAUSE
TIME DEFROST
PROGRAMMED RECIPES
POPCORN
SOUP
PIZZA
BEVERAGE
DINNER PLATE
BEEPER VOLUME
TIME DEFROST
TIME COOK
CLEAR/OFF
POWER LEVEL
START/PAUSE
CLOCK
USB
USB
FRONT PANEL RESET
MAX

FIGURE 17

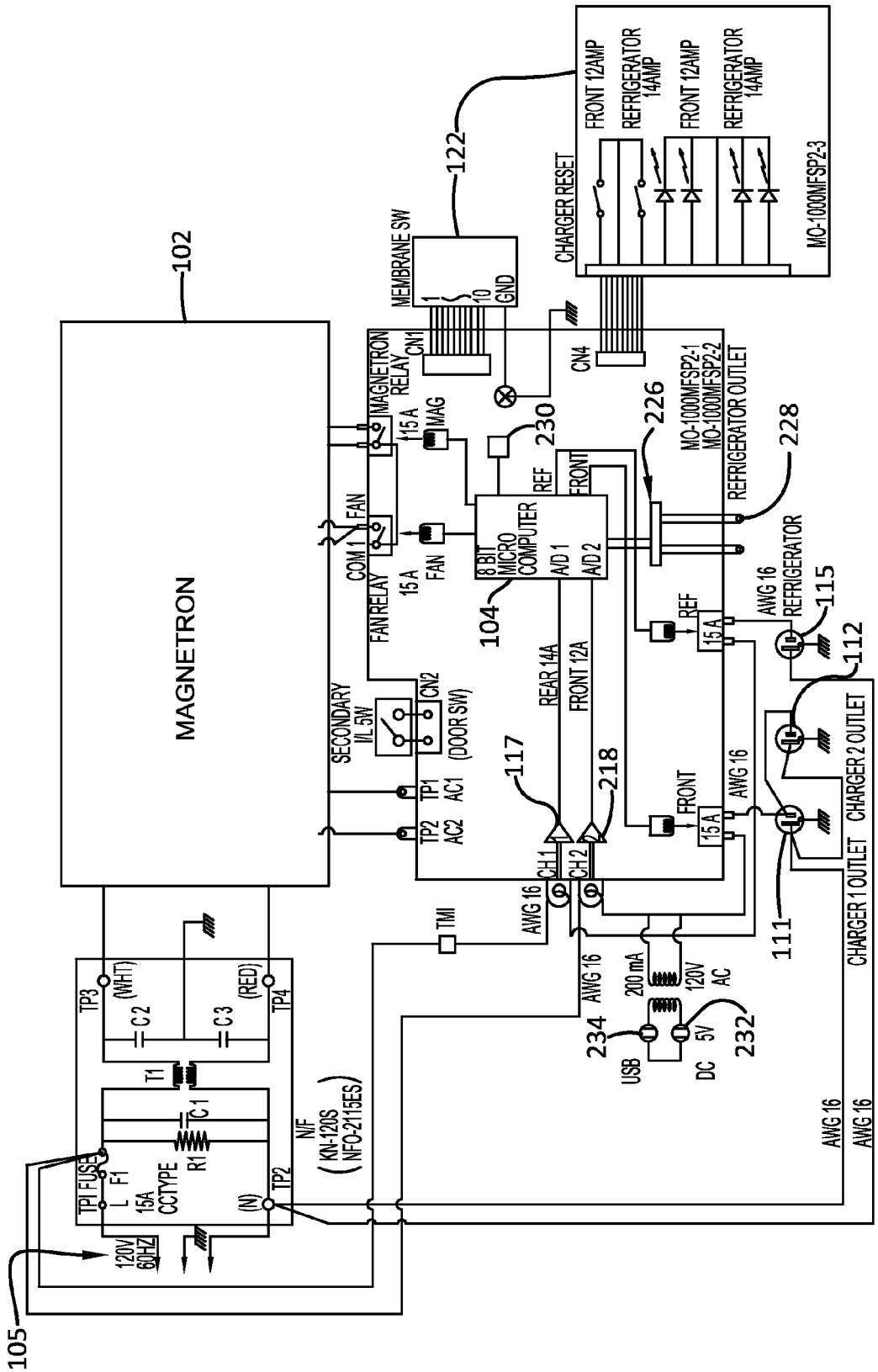
MAGNETRON
102
105
122
MEMBRANE SW
1
10
GND
CN1
CN4
CHARGER RESET
FRONT 12AMP
REFRIGERATOR 14AMP
FRONT 12AMP
REFRIGERATOR 14AMP
MO-1000MFSP2-3
MAGNETRON RELAY
15 A
MAG
230
226
228
MO-1000MFSP2-1
MO-1000MFSP2-2
REFRIGERATOR OUTLET
REF
FRONT
8 BIT MICRO COMPUTER
A/D 1
A/D 2
104
FAN
COM 1
FAN RELAY
15 A
FAN
REAR 14A
FRONT 12A
REF
15 A
AWG 16
REFRIGERATOR
115
112
SECONDARY I/L 5W
CN2
(DOOR SW)
TP1
AC1
TP2
AC2
117
218
FRONT
15 A
AWG 16
CHARGER 2 OUTLET
CHARGER 1 OUTLET
111
CH1
CH2
AWG 16
TMI
AWG 16
200 mA
120V
AC
234
USB
DC
5V
232
TP3
(WHT)
C2
C3
(RED)
TP4
T1
C1
R1
TPI FUSE
L
F1
15A
CCTYPE
(N)
TP2
N/F
(KN-120S
NFO-2115ES)
120V
60HZ
AWG 16
AWG 16

FIGURE 18

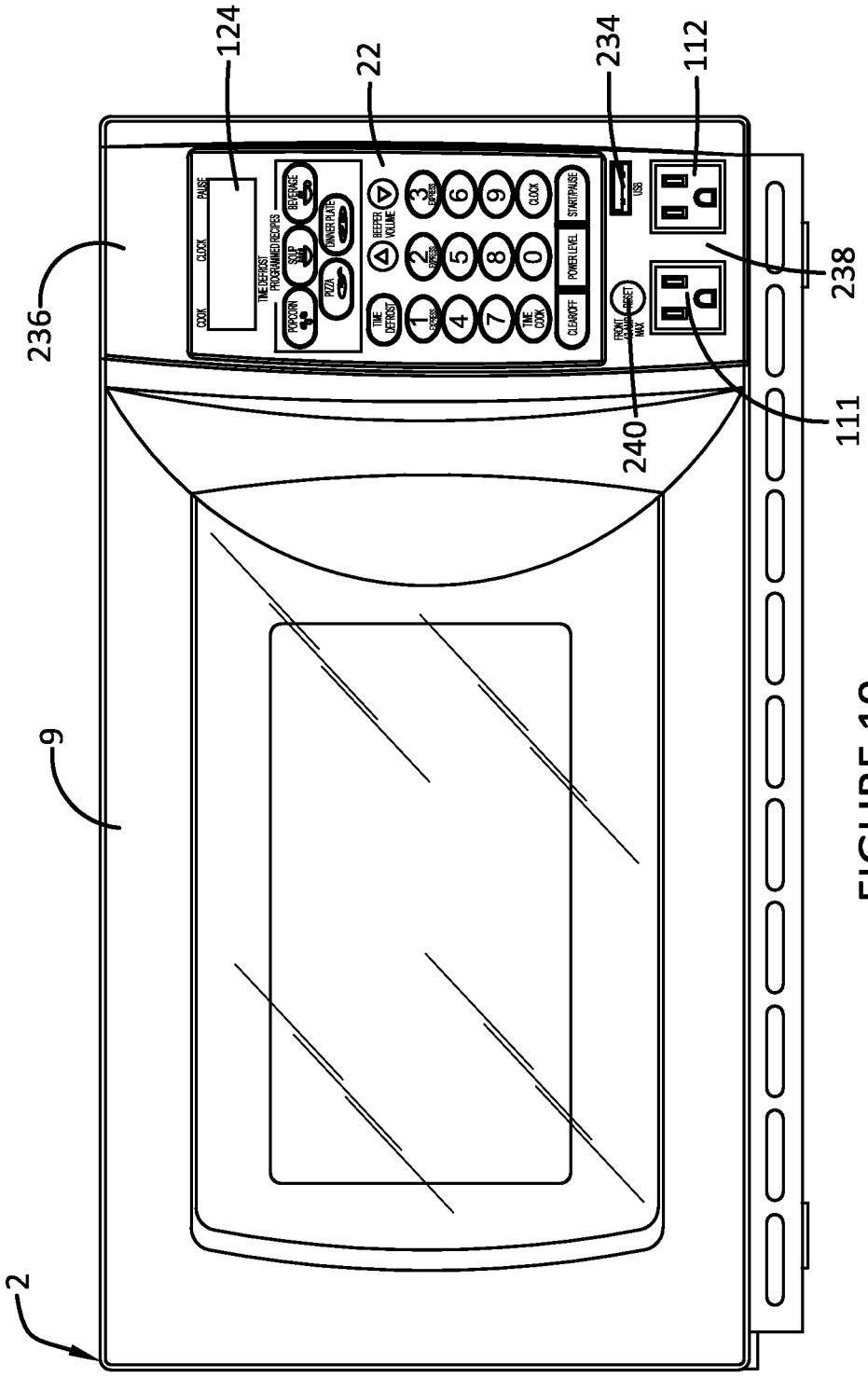
124
22
234
112
236
238
111
240
9
2
COOK
CLOCK
PAUSE
TIME DEFROST
PROGRAMMED RECIPES
POPCORN
SOUP
BEVERAGE
PIZZA
DINNER PLATE
BEEPER VOLUME
TIME DEFROST
TIME COOK
CLEAR/OFF
POWER LEVEL
START/PAUSE
USB
FRONT COOKING TARGET WAX

FIGURE 19

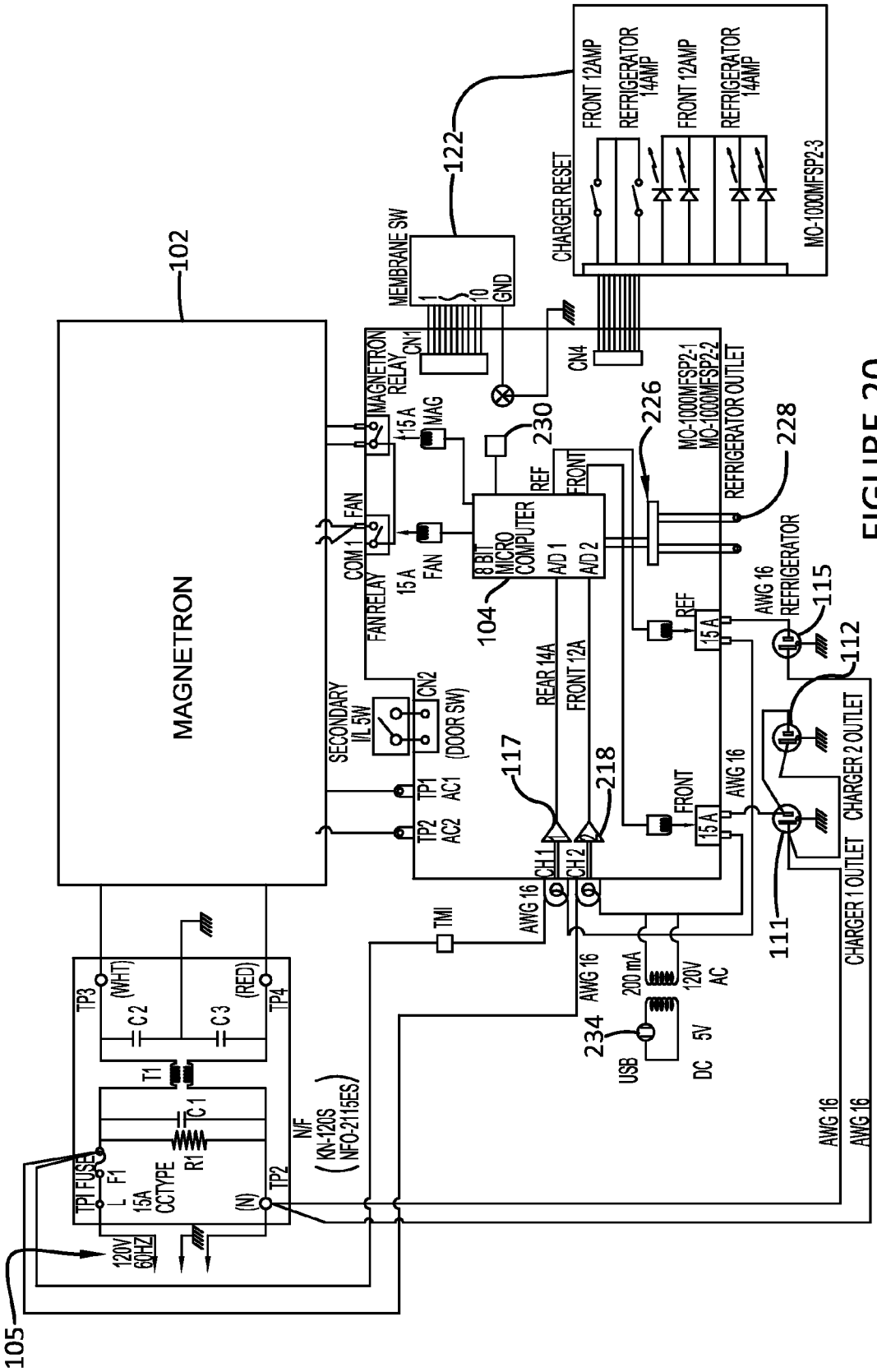
MAGNETRON
102
105
122
MEMBRANE SW
1
10
GND
CN1
CN4
CHARGER RESET
FRONT 12AMP
REFRIGERATOR 14AMP
FRONT 12AMP
REFRIGERATOR 14AMP
MO-1000MFSP2-3
MAGNETRON RELAY
15 A
MAG
230
226
228
MO-1000MFSP2-1
MO-1000MFSP2-2
REFRIGERATOR OUTLET
REF
FRONT
FAN
COM 1
FAN RELAY
15 A
FAN
8 BIT MICRO COMPUTER
A/D 1
A/D 2
104
REFRIGERATOR
AWG 16
115
112
REF
15 A
SECONDARY I/L 5W
CN2
(DOOR SW)
REAR 14A
FRONT 12A
117
218
TP1
AC1
TP2
AC2
FRONT
15 A
AWG 16
CHARGER 2 OUTLET
CHARGER 1 OUTLET
111
CH 1
CH 2
AWG 16
TMI
AWG 16
200 mA
120V
AC
234
USB
DC
5V
TP3
(WHT)
C 2
C 3
(RED)
TP4
T1
C 1
R1
TP1 FUSE
F1
L
15A
CCTYPE
(N)
TP2
N/F
(KN-120S
NFO-2115ES)
120V
60HZ
AWG 16
AWG 16

FIGURE 20

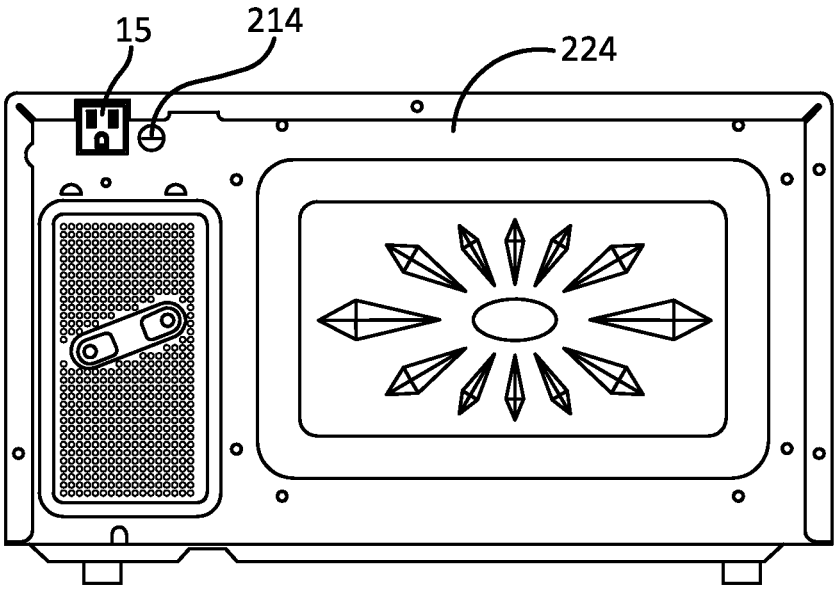


FIGURE 21

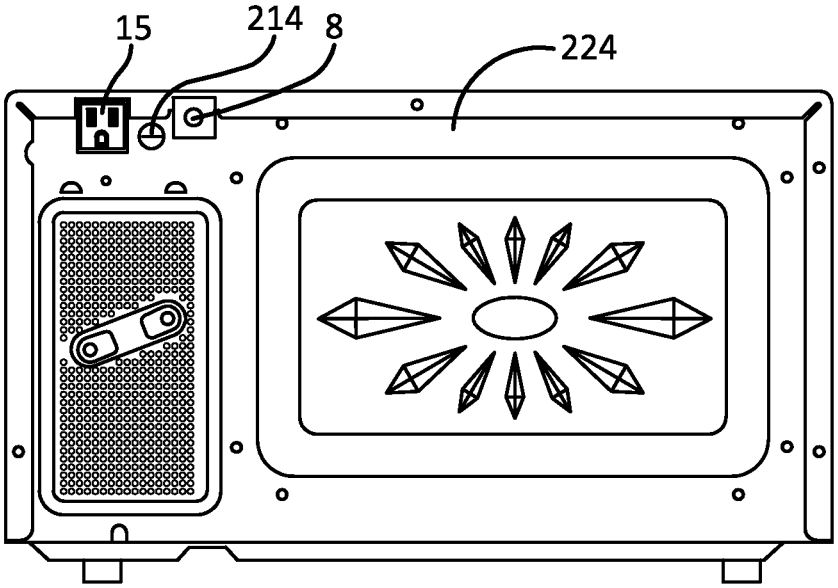


FIGURE 22

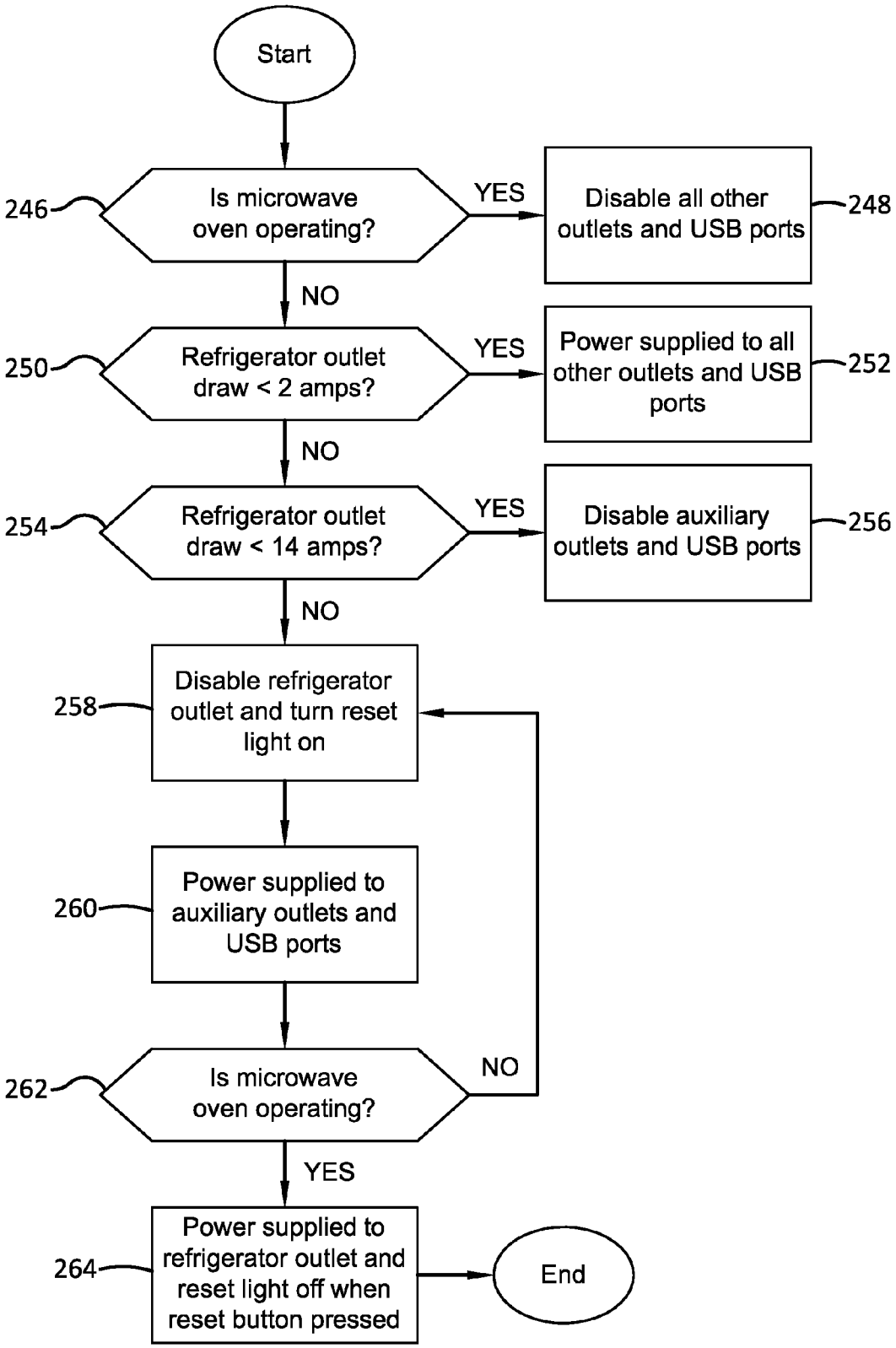
Start
246
Is microwave oven operating?
YES
Disable all other outlets and USB ports
248
NO
250
Refrigerator outlet draw < 2 amps?
YES
Power supplied to all other outlets and USB ports
252
NO
254
Refrigerator outlet draw < 14 amps?
YES
Disable auxiliary outlets and USB ports
256
NO
258
Disable refrigerator outlet and turn reset light on
260
Power supplied to auxiliary outlets and USB ports
262
Is microwave oven operating?
NO
YES
264
Power supplied to refrigerator outlet and reset light off when reset button pressed
End

FIGURE 23

# MULTIPLE LINKED APPLIANCE WITH AUXILIARY OUTLET

## CROSS-REFERENCE TO RELATED APPLICATIONS

This application is a continuation-in-part of U.S. application Ser. No. 12/317,632 filed on Dec. 23, 2008, which claims benefit under 35 U.S.C. § 119(e) of Provisional Application No. 61/009,419, filed Dec. 28, 2007, the disclosure of which is incorporated herein by reference in its entirety.

## FIELD OF THE INVENTION

This application relates to a system of multiple linked appliances connected to a power supply through a single supply cord. In particular a refrigerator and microwave are connected for single plug operation while providing additional special purpose outlets.

## BRIEF DESCRIPTION OF RELATED DEVELOPMENTS

Combination refrigerator and microwave oven systems are described in U.S. Pat. Nos. 4,880,954 and 4,847,722. In the devices described, the refrigerator is connected to the power supply and provides a connection for the microwave oven to be connected to the same supply. A single plug, therefore, serves to connect both appliances and the current required for each appliance is supplied by the same supply cord and circuit.

To make this combination attractive for use in dorm rooms, hotel rooms, recreational vehicles, tractor trailer cabs, and other similar locations, it is necessary to provide some means by which the peak currents of both appliances are not demanded from the supply at the same time. Many household circuits are protected from overload conditions by means of an automatic circuit breaker that is activated when current in the circuit exceeds the breaker rating. This is 15 amps in many circuits.

The duty cycle of a refrigerator used in these combined systems includes a current spike that occurs during the first few seconds of operation. This is the start up current for the refrigerator compressor and is considerably reduced, as the compressor obtains its operational speed. In typical refrigerator appliances the peak current may be in the range of 7 to 9 amps, while the steady state current may level off at 1.4 amps or less. A microwave oven demands a relatively steady 8 to 13 amps. It is apparent that an overload condition will occur frequently, when both appliances are in use, unless some control is exercised.

In the '954 patent the compressor power is disabled when the microwave is energized. This is accomplished by coupling the timer of the microwave to the compressor power. In addition a door interlock enables the compressor, since the microwave is disabled when the door is open. The '722 patent describes a control circuit for a combination microwave and refrigerator system in which a relay disables the microwave oven for a period of time depending on the rating of the compressor, when the compressor of the refrigerator is energized.

It would be advantageous to construct a combination microwave/refrigerator system that also provides auxiliary outlets for low power applications, such as for the purpose of recharging cellular phones, operating lap top computers and other low power devices, while controlling the operation of the appliances to avoid overload conditions.



## SUMMARY OF THE INVENTION

In an embodiment of this invention, a combination microwave and refrigerator system is constructed having a single plug input supply. The microwave oven is adapted to provide power to a refrigerator, and to auxiliary receptacles adapted for low power operation. The microwave oven includes a microprocessor controller adapted to monitor operation of the refrigerator compressor and controls the power to the microwave magnetron and other components. The current to the low power receptacles are separately monitored for control by the microwave controller. The microwave controller is adapted to balance the duty cycles of the connected appliances attached to avoid overload conditions. A control algorithm is implemented internally within the microwave controller. A receptacle for the refrigerator and the low power auxiliary receptacle may be implemented as part of the microwave control panel.

In one embodiment, the auxiliary outlets are constructed to provide low power for the purpose of recharging cellular phones, personal media devices, digital cameras, in addition to operating lap top computers and other low power devices. The current to the auxiliary outlets is sensed and provided to the microwave controller.

In another embodiment, the power to the auxiliary outlets is disabled by the microwave controller when the microwave magnetron is energized or whenever the current to the auxiliary outlets exceeds a preset value.

In one embodiment, a control model is established and executed by the microwave controller. The model is dependent on the state of operation of the microwave magnetron. As part of the control model, the power to the compressor is monitored to sense operation of the compressor. When power to the microwave is demanded, the compressor is disabled for a preset minimum period. When microwave demand ceases, refrigerator power is restored provided, that the preset minimum period has expired.

In another embodiment of the control module, sensing circuits are connected to monitor current to the auxiliary outlets. The control model is adapted to disable the power to the auxiliary receptacles, if the microwave is in operation. In addition the auxiliary receptacles are disabled if a predetermined maximum current is sensed. Another control model is based on operation of the refrigerator and operates to disable the auxiliary receptacles when the compressor is in the start-up mode.

In one aspect of the invention, a non-transitory processor storage readable medium having processor readable program code embodied therein for operating a control processor to control a system of multiple linked appliances having a microwave oven, a refrigerator, and an auxiliary power supply outlet is provided. The processor readable program code causes the control processor to disable the refrigerator and the auxiliary power supply outlet, when the microwave demands power, and enable the auxiliary power supply outlet when the microwave is off.

## BRIEF DESCRIPTION OF THE DRAWINGS

The system of this invention is explained in more detail below with reference to the accompanying drawing, in which:

FIG. **1** is a front perspective view of an embodiment of an appliance system of this application;

FIG. **2** is a rear perspective view of the embodiment of FIG. **1** showing an alternative arrangement;

FIG. **3** is a block diagram of an embodiment of the system of this application;

FIG. **4** is a schematic diagram of the embodiment of FIG. **3**;

FIG. **5** is a flow diagram of an embodiment of this application;

FIG. **6** is a flow diagram of another embodiment of this application;

FIG. **7** is a flow diagram of another embodiment of this application;

FIG. **8** is a graph illustrating the duty cycles of the appliances in the system of FIG. **3**;

FIG. **9** is a block diagram of an alternate embodiment of this application;

FIG. **10** is a schematic diagram of the embodiment of FIG. **9**; and

FIG. **11** is an illustration of a control panel of the embodiment of FIG. **9**.

FIG. **12** is a front view of the microwave oven according to another embodiment of this application.

FIG. **13** is a side view of the microwave oven of FIG. **12**

FIG. **14** is a top perspective view of a charging pad on the top portion of the microwave oven of this application.

FIG. **15** is an illustration of a control panel of an alternate embodiment of this application.

FIG. **16** is a schematic diagram of the embodiment of FIG. **15**.

FIG. **17** is a front view of the microwave oven according to another embodiment of this application.

FIG. **18** is a schematic diagram of the embodiment of FIG. **17**.

FIG. **19** is a front view of the microwave oven according to another embodiment of this application.

FIG. **20** is a schematic diagram of the embodiment of FIG. **19**.

FIG. **21** is a rear view of the microwave oven according the embodiments of FIGS. **12-19**.

FIG. **22** is a similar view as that of FIG. **21** except that the AC cord is shown.

FIG. **23** is a flow diagram of an embodiment of this application.

## DESCRIPTION OF THE PREFERRED EMBODIMENT

A multiple linked appliance system **1**, for example, a combination microwave oven **2**, a refrigerator **3** incorporating features of the present invention is illustrated in the figures. Although the present invention will be described with reference to the embodiments shown in the drawings, it should be understood that the present invention may have many alternate forms. In addition, any suitable size, shape or type of elements or materials could be used. The computer operated devices described in this application may be constructed having one or several processors and one or several program product modules stored in one or several memory elements. For illustration, computer components may be described as individual units by function. It should be understood, that in some instances, these functional components may be combined.

One embodiment of a multi-appliance interconnected system **1** is illustrated in FIG. **1**. This embodiment consists of two stand alone appliances, a refrigerator **3** and a microwave oven **2**. Refrigerator **3** is connected to microwave oven **2** by power cord **7** to refrigerator receptacle **15**, shown at the rear of the microwave **2** in FIG. **2**. Refrigerator **3** is generally subject to control by the microwave microprocessor controller **4** of the microwave oven **2**. A single cord **8** provides input power to the system **1** from receptacle **5** through microwave **2**. In the case where stand alone appliances are used, as shown in FIGS. **1** and **2**, microwave oven **2** is connected directly to power source **5**. The refrigerator **3**, as the heaviest component, is used as the base with the microwave oven **2** stacked on top. In the selection of the refrigerator **3**, it would be advantageous in one embodiment for the height of the refrigerator to be no more than 48 inches above the floor. This provides a more ergonomic operation of the microwave oven **2** for the user. In addition, in the stacked position of the appliances in an embodiment, the doors **9** and **10** of the microwave **2** and refrigerator **3**, respectively, should be arranged in a common plane. The appliances may be of standard design with features commonly available. The internal components of the appliances are well known and do not need to be described herein.

Microprocessor **4** is the controller for the operation of the microwave oven **2** and is also adapted to control the other components of system **1**, as shown in FIG. **3**. Power is distributed throughout the system **1** under control of microwave controller **4** and digitally operated switches such as relays **19** and **20** of FIG. **3**. Power is distributed to each of the appliances **2** and **3**, and to auxiliary low power receptacles **11** and **12**. In use lamps **13** and **14** in the form of LED'S or the like may be connected to the auxiliary receptacles to indicate power being available or disabled. The low power auxiliary receptacles **11** and **12** are provided to permit convenient access for plugging in a low power device for example, rechargeable devices, such as cellular phones, PDA's, or other electronic devices that do not demand high power. As shown in the graph of FIG. **8**, there are instances during which, if more than one of the appliances is in use, the cumulative current would cause an overload condition.

Control panel **22** of microwave oven **2** may be adapted to provide a display of the particular status of the controlling relays, for example, LED's **13** and **14** may indicate that power to the outlets **11**, and **12** are disabled or available. In one embodiment the lamps will light when power is available at the outlet and flash when disabled. In another embodiment the lamps will light when power is disabled at the outlet and not activate when power is available at the outlet as a means to reduce the Standby Power requirements. A button operated touch panel provides manual control.

As shown in FIG. **4**, in order to control the power to the microwave **2**, refrigerator **3** and receptacles **11** and **12**, sensing circuits, may be coupled to the controller to monitor current to the appliances and the auxiliary receptacles. A relay **20** is connected in the power line to the refrigerator and may be actuated by signals from controller **4**. In particular, according to an embodiment of this application, sensing circuits **16**, as shown in FIG. **4**, have sensors **17** and **18** coupled to the power line of the auxiliary outlets **11** and **12** to monitor the current being used by a connected device. Sensors **17** and **18** may be current sensing transformers of the type available from Triad Magnetics of Corona, Calif. The signals generated by sensors **17** and **18** may be used to activate switches or other control components, such as relays **19**. Relays **19** may be actuated by controller **4** to enable and disable power to the low power auxiliary outlets **11** and **12** in response to signals from sensors **17** and **18**. A maximum current may be set by controller **4** to prevent

overload of the outlets **11** and **12**. In one embodiment of the system of this application, the maximum current limit is set at 2 amps.

In another embodiment, a clock device **21** could be used to provide timed delays during which, for example, refrigerator **3** would be prevented from undesirably rapid on/off cycles. When refrigerator **3** is disabled during microwave operation, a time delay of 3 minutes is provided during which refrigerator **3** will remain disabled, even if microwave use is only for a short period. Controller **4** may be programmed to manage the power to the components of the system to avoid overload conditions, while minimizing disruptions in the use of an individual appliance. A model of operative events and related control operations may be designed into the program executed by controller **4** to provide a control methodology as illustrated in FIGS. **5-7**.

In one embodiment, as illustrated in the block diagram of FIG. **3**, microprocessor controller **4**, constructed as part of the controller for microwave **2**, would be adapted to process the sensor signals and identify particular events in the system **1** related to a particular appliance. Microprocessor **4** would control the power to microwave **2** and refrigerator **3** and also low power receptacles **11** and **12** to avoid overload conditions. The microprocessor **4** could be programmed to execute the control methods illustrated and described below. In a preferred embodiment, the controller **4** is the control microprocessor for microwave oven **2** and is adapted to execute the control algorithms described below. Controller **4** is coupled directly to refrigerator outlet **15** and low power outlets **11** and **12**.

In one embodiment, shown in FIG. **1**, the outlets **11**, and **12**, are installed as part of the front control panel of microwave oven **2**. In FIG. **2**, in another embodiment, the auxiliary receptacles **11** and **12** and refrigerator receptacle **15** are accessible at the rear of the microwave oven **2**. In these alternative embodiments, the microwave oven **2** is connected by supply cord **8** directly to power supply receptacle **5**. Refrigerator **3** is connected by power cord **7** to receptacle **15** in microwave oven **2** as shown in FIG. **2**.

In one embodiment, control models are established as shown in FIGS. **5-7** for execution by the controller **4**. These models can be in the form of algorithms stored in a computer readable medium, such as software or firmware within microprocessor **4**. The models shown are, in the first instance, dependent on the state of operation of microwave oven **2**. The current demands of the microwave **2** are generally the most significant contribution to overload, as shown in FIG. **8**. To avoid overload conditions, power to the low power receptacles **11** and **12** and refrigerator receptacle **15** is disabled during microwave operation. If the refrigerator **3** is under power when the microwave **2** is turned on, the power, to the refrigerator is turned off and clock **21** begins to count for a predetermined period during which the compressor of refrigerator **3** cannot be restarted. A time delay, for example, of 3 minutes, may be set and when this delay period is expired, receptacle **15** may again be enabled, providing microwave operation has ceased. This prevents a too rapid restart of the compressor that may otherwise result in damage.

In the embodiment shown in FIG. **5**, if low power is demanded at receptacle **11** or **12** and microwave oven **2** is not in use, power is supplied to the low power receptacles, providing further, that the current demand in an individual outlet does not exceed a preset limit, for example, 2 amps. Since the auxiliary outlets may be enabled during refrigerator operation, there may be an overload generated at peak compressor operation. In one embodiment the microwave controller acts to disable the auxiliary outlets during compressor startup to prevent accidental overload of the system. Therefore as illustrated in the flow diagram of FIG. **5**, controller may be adapted to check the operational status of the refrigerator, as well as the microwave oven, prior to enabling the auxiliary outlets.

FIGS. **9-11** illustrate another embodiment. In this embodiment the sensing components **117** and **118** are connected to reduce the risk of overload by the combined demands of the auxiliary outlets **111** and **112** and the refrigerator outlet **115**. In the configuration, as shown in FIG. **10**, current sensor **117** is connected to monitor the current in the refrigerator outlet **115** and is constructed to limit the refrigerator current component so that it does not exceed 10 amps. Current sensor **118** is connected to monitor the combined current in the auxiliary outlets **111** and **112**. Current sensor **118** is constructed to limit the combined auxiliary outlet current to 4 amps. In this manner the risk of overload is minimized In the block diagram of FIG. **9**, the microwave **102** having controller **104** is connected to power supply **105**. Clock **121** provides a timing device to generate a restart delay for refrigerator **103**. Sensing circuit/sensor **117** is connected to monitor the current demanded by refrigerator **103** and sensing circuit/sensor **118** is connected to low power receptacles **111** and **112** to monitor the combined current in receptacle **111** and **112**.

In this embodiment, as shown in FIG. **11**, a control panel **122** is arranged with a keypad **123** for manual control and a display **124**. Auxiliary outlet **111** is shown as accessible from the front and is associated with a status LED indicator and reset button **113** that may be caused to be on during use and switch to a flashing mode when the microwave is running Refrigerator outlet **115** is also shown to be accessible from the front panel and is associated with an LED indicator and reset button **114**. Similarly LED indicator **114** is controlled to be on during use of the refrigerator and to switch to a flashing mode when the microwave is operating. In another embodiment, the status LED indicator and reset button **113** may be caused to be off during use and switched on or to a flashing mode when the microwave is running Similarly, in this another embodiment, the LED indicator **114** is controlled to be off during use of the refrigerator and switched on or to a flashing mode when the microwave is operating.

A further embodiment of the processor operational model is shown in FIG. **6**. In this model, the refrigerator demands power. This may be triggered by a temperature drop in the refrigerator and involve start up of the refrigerator compressor with an associated peak power demand. If the microwave is on, the recycling of the refrigerator will be delayed. If the microwave was on and subsequently cycled off, the clock **21** must be checked to determine if the restart can occur. Under some circumstances, it may be necessary to give the refrigerator priority to prevent an undesirable drop in temperature. In the latter instance, microcontroller can be coupled to the refrigerator temperature sensor to execute a time sequence during which the microwave will be disabled to allow the refrigerator to return to proper operating temperatures.

In the embodiment of FIG. **7**, priority is given to the power demands of the microwave oven, as indicated above. Use of the receptacles **11**, **12**, and **15** are, therefore, disabled during microwave operation. The operational models, illustrated in FIGS. **5-7**, may be established by algorithms that are programmed or imbedded in controller **4**.

In this manner a system of linked appliances, including a microwave oven, refrigerator, and a low power appliance

may all be connected through a common supply cord without the risk of inconvenient interruptions in use caused by overloads.

In another exemplary embodiment as illustrated in FIGS. **12** and **13**, the auxiliary outlets or receptacles **211**, **212** may be installed as part of the front control panel **222** of the microwave oven **202** and located on the upper portion **270** of the front control panel **222**. The auxiliary outlets **211**, **212**, front control panel **222** and microwave oven **202** are similar to auxiliary outlets **11**, **12**, front control panel **22**, and microwave oven **2** except for that discussed below. In this exemplary embodiment, the auxiliary outlets **211**, **212** are positioned side by side with respect to each other with each of the auxiliary outlets **211**, **212** being at the same height as the other. The auxiliary outlet **211** of FIG. **12** may be associated with a status LED indicator and reset button **213**, which is located on the lower portion **272** of the front control panel and in vertical alignment with the auxiliary outlet **211**. The status LED indicator and reset button **213** may be caused to be on during use and switched to a flashing mode when the microwave oven **202** is running. The auxiliary outlet **212** of FIG. **12** may be associated with status LED and reset button **214**, which is located on the lower portion of the front control panel and in vertical alignment with the auxiliary outlet **212**. The status LED indicator and reset button **214** may be caused to be on during use and switched to a flashing mode when the microwave oven **202** is running. In another embodiment, the status LED indicator and reset button **213** may be caused to be off during use and switched on or to a flashing mode when the microwave oven is running Similarly, in this another embodiment, the status LED indicator and reset button **214** may be caused to be off during use and switched on or to a flashing mode when the microwave oven is running All other elements are similar in structure and function as that of the embodiments shown in FIGS. **1-11**. Thus, the same reference numbers will be used in this exemplary embodiment to indicate elements that are similar in the embodiments shown in FIGS. **1-11**.

Smart technology may be included in each of the exemplary embodiments. For example, a user may be able to regulate the refrigerator **3** such as by turning it on and off remotely by a remote device **217**. The remote device **217** may be a hand held device such as a cellular phone. The cell phone may also be a smart phone. A charging pad **219** (FIG. **14**) may be provided on the microwave oven **2** or other suitable place to receive the smart phone for charging the smart phone. For example, a wireless charging pad **219** may be placed on top **225** of the microwave oven **2** for recharging the smart phone. The charging pad **219** may be built into the top **225** of the microwave oven **2** or be a separate piece that is mounted to the top **225** of the microwave oven **2**. The charging pad **219** includes a recessed area **220** for receiving an item to be charge such as the smart phone. The charging pad **219** may include a wireless connection **221** for the remote control device **217** for controlling the microwave or refrigerator such as turning off or on the microwave oven **2** and/or refrigerator **3**. USB ports **223**, **224** may be provided in the charging pad **219**. Alternatively, or in addition, power outlets may be provided in the charging pad **219**. Alternatively, the charging pad **219** may be provided on the front, side, rear or bottom of the microwave oven **2**.

As seen in FIGS. **16**, **18**, and **20**, a safety sensor **226** such as a smoke or gas sensor may be provided in the microwave oven **2**. The smoke sensor **226** operates to turn off the microwave oven upon sensing smoke or polluted air indicative of a dangerous condition such as the microwave being on fire. The safety sensor **226** may be powered on when the microwave oven is in operation. The sensor **226** may be an alcohol sensor that is coupled with a thermistor **228**. The alcohol sensor **226** may operate in the temperature range of 32 to 104 degrees Fahrenheit. When abnormal heating is sensed by the thermistor **228**, the thermistor **228** causes the alcohol sensor **226** to turn on and check the gas.

If the alcohol sensor **226** senses polluted air that is indicative of a dangerous condition, a shutdown signal is outputted by the alcohol sensor to the microcontroller **104**. Upon receiving the shutdown signal, the microcontroller **104** determines that the microwave oven **2** should be shut down and causes the microwave to shutdown. If (after the alcohol sensor is caused to be turned on by the thermistor) the alcohol sensor **226** senses air that is not indicative of a dangerous condition such as the air produced by normal cooking of food in the microwave oven **2**, the alcohol sensor will not send a shutdown signal to the microcontroller **104**.

Alternatively or in addition, a fault indicator **230** may be coupled to the microcontroller **104** or other circuitry to indicate that there is a dangerous condition upon detection by the alcohol sensor **226**. For example, the fault indicator **230** may be a buzzer that is activated in response to the alcohol sensor **226** sensing polluted air indicative of a dangerous condition. In another example, fault indicator **230** may include the display **124** displaying a fault message such as "E-1" in response to the alcohol sensor **226** detecting polluted air indicative of a dangerous condition.

The embodiment may include a combination of fault indicators. For example, upon the alcohol sensor **226** sensing air that is indicative of a dangerous condition, a shutdown signal is outputted by the alcohol sensor **226** to the microcontroller **104**. Upon receiving the shutdown signal, the microcontroller **104** determines that the microwave oven **2** should be shut down and causes the microwave oven **2** to shutdown. In addition, a buzzer is activated and the display **124** displays a fault message such as "E-1" in response to the alcohol sensor **226** sensing polluted air indicative of a dangerous condition.

The alcohol **226** sensor may be reset automatically upon the alcohol sensor **226** not detecting gas indicative of the dangerous condition. Alternatively or in addition, the alcohol sensor **226** may be reset upon opening of the microwave door **9** of the microwave oven **2**. The display may display a "bar" or other suitable icon to indicate that the alcohol sensor **226** is turned on. Other types of suitable safety sensors may also be used instead of the alcohol sensor to detect a dangerous condition.

As seen in FIGS. **15** and **16**, the front control panel **22** of the microwave oven **2** may include Universal Serial Bus (USB) ports **232**, **234** for connection, communication, and power supply between the front control panel **22** and electronic devices such as a personal computer, cell phone, iPod®, iPad®, or other suitable device to allow communication and/or charging of the electronic device plugged into the USB ports. In one exemplary embodiment, a first USB port **232** may be provided on the upper portion **236** of the front control panel **22**, and a second USB port **234** may be provided on the lower portion **238** of the front control panel **22** above the auxiliary outlets **111**, **112** and between the reset buttons **113**, **114** as seen in FIG. **15**. The first USB port **232** may include a three ampere fuse and a linear time-variant system (LVT) of 100 mA, 120 volts, and 12 watts. The second USB port **234** may include a linear time-variant system (LVT) of 200 mA, 120 volts, and 24 watts. The second USB port **234** may also be reset. The current sensor **118** may be constructed to limit the second USB port and the two auxiliary outlets to 12 amps. The USB ports **232**, **234**

may be in operative connection with respective printed circuit boards. Alternatively or in addition, one or more USB ports may be provided on the rear of the microwave oven, the sides of the microwave oven, and/or the top or bottom of the microwave oven. Alternatively or in addition, one or more auxiliary outlets may be provided on the rear of the microwave oven, the sides of the microwave oven, and/or the top or bottom of the microwave oven. Alternatively, the refrigerator outlet may be provided on the top, bottom, or one of the sides of the microwave oven.

FIGS. **17** and **18** show another exemplary arrangement of the USB ports **232**, **234**. In this arrangement, the first and second USB ports **232**, **234** are located side by side on the lower portion **238** of the front control panel **22** above the auxiliary outlets **111**, **112**. The USB ports **232**, **234** are also located rightwardly (as viewed in FIG. **17**) adjacent a status LED indicator and reset button **240**. In this exemplary arrangement, current sensor **218** is connected to monitor the combined current in the USB ports **232**, **234** and the auxiliary outlets **111** and **112**. The current sensor **218** is constructed to limit the combined current in the USB ports and auxiliary outlets **111** and **112** to 12 amperes. The LED indicator and reset button **240** may light on when power to the auxiliary outlets **111**, **112** and the USB ports **232**, **234** is available and flash when disabled. In another embodiment, the LED indicator and reset button **240** may be off when power to the auxiliary outlets **111**, **112** and the USB ports **232**, **234** is available and light on or flash when disabled. Depressing the LED indicator and reset button **240** enables the auxiliary outlets **111**, **112** and the USB ports **232**, **234** so that power may be supplied to them when the combined current in them falls from above to below the limit.

FIGS. **19** and **20** show an alternative arrangement in which one USB port **234** is located above the auxiliary outlets **111**, **112** and rightwardly adjacent the status LED indicator and reset button **240**. In this exemplary arrangement, the current sensor **218** is connected to monitor the combined current in the USB port **234** and auxiliary outlets **111** and **112**. The current sensor **218** is constructed to limit the combined current in the USB port **234** and auxiliary outlets **111** and **112** to 12 amperes. Alternatively, the current sensor **218** may be constructed to limit the combined current in the USB port **234** and the auxiliary outlets **111** and **112** to 13 amperes. The LED indicator and reset button **240** may light on when power to the auxiliary outlets **111**, **112** and the USB port **234** is available and flash when disabled. In another embodiment, the LED indicator and reset button **240** may be off when power to the auxiliary outlets **111**, **112** and the USB port **234** is available and light on or flash when disabled. Depressing the LED indicator and reset button **240** enables the auxiliary outlets **111**, **112** and the USB port **234** so that power may be supplied to them when the combined current in them falls from above to below the limit. All other elements of the embodiments of FIGS. **17-20** are similar in structure and function as the embodiment shown in FIGS. **1-11**. Thus, the same reference numbers will be used in this exemplary embodiment to indicate elements that are similar in the embodiments shown in FIGS. **1-11**.

FIG. **21** shows the rear portion **244** of the microwave oven for the embodiments shown in FIGS. **12-20**. Refrigerator outlet **15** is shown to be provided on and accessible from the rear portion **244** of the microwave oven and is associated with the LED indicator and reset button **214**, which is also provided on the rear portion **244** of the microwave oven. FIG. **22** is a similar view as FIG. **21** except that AC cord **8** for the microwave oven is shown.

In the embodiments shown in FIGS. **12-22**, control models may be established for execution by the controller or microprocessor **4**. These models can be in the form of algorithms stored in a computer readable medium, such as software or firmware within the microprocessor **104**. The models or scenarios are, in the first instance, dependent on the state of operation of the microwave oven **2**. The current demands of the microwave oven **2** are generally the most significant contribution to overload. To avoid overload conditions, power to the low power receptacles or auxiliary outlets, refrigerator receptacle, and/or USB ports is disabled during microwave operation.

FIG. **23** shows a flow chart illustrating several control models or scenarios. The microprocessor **104** begins by determining whether the microwave oven is turned on or operating in step **246**. When the microwave oven is turned on or operating, the rear refrigerator outlet **15**, the two auxiliary outlets **111**, **112** on the front control panel **22**, and the two USB ports **232**, **234** on the front control panel are all turned off or disabled, so that the total draw of current for the combination microwave and refrigerator is not over 15 amperes as indicated in step **248**.

When the microwave oven is not operating and items are plugged into the two USB ports **232**, **234**, two auxiliary outlets **111**, **112**, and rear refrigerator outlet **15**, then the microprocessor **104** determines whether the refrigerator outlet **15** is drawing less than 2 amperes (approximately the average amperes when the refrigerator is running) in step **250**. If the refrigerator outlet **15** is drawing less than 2 amperes, then all the outlets **15**, **111**, **112** and USB ports **232**, **234** are enabled, so that power may be supplied to them as indicated in step **252**. If the refrigerator outlet **15** not drawing less than 2 amperes, the microprocessor **104** determines whether the refrigerator outlet **15** is drawing less than 14 amperes in step **254**. If the refrigerator outlet **15** is drawing less than 14 amperes but not less than or greater than or equal to 2 amperes, then the auxiliary outlets **111**, **112** and USB ports **232**, **234** are disabled or turned off so that no power may be supplied to them as indicated in step **256**. The refrigerator outlet **15** remains enable. If the refrigerator outlet **15** is not drawing less than 14 amperes or drawing greater than or equal to 14 amperes, then the refrigerator outlet **15** is disabled in step **258**. This may be accomplished by tripping the relay **20** of the reset circuit off. In addition, the red LED light on the LED indicator and reset button **214** is turned on to identify the disablement condition of the refrigerator. Then, in step **260**, the auxiliary outlets **111**, **112** and USB ports **232**, **234** are enabled so that power may be supplied to them.

Then, the microprocessor determines whether the refrigerator outlet **15** is drawing less than 14 amperes in step **262**. If the refrigerator outlet **15** is not drawing less than 14 amperes or drawing greater than or equal to 14 amperes, then the refrigerator outlet **15** remains disabled and the red LED light on the LED indicator and reset button **214** remains turned on to identify the disablement condition of the refrigerator **3**. This condition may occur, for example, if an electrical heater is plugged into the refrigerator outlet **15**. When the refrigerator outlet **15** draws less than 14 amperes resulting from the overload condition being eliminated, the refrigerator outlet **15** will be enabled so that power may supplied to the refrigerator outlet **15** upon the LED indicator and reset button **214** being depressed as indicated in step **264**. Depression of the LED indicator and reset button **214** in this condition will also turn off the red LED light. The

process then ends. It should be noted that the microprocessor **104** can make the determination in steps at the same time or in a different order.

It should be understood that the above description is only illustrative of the invention. Various alternatives and modifications can be devised by those skilled in the art without departing from the invention. Accordingly, the present invention is intended to embrace all such alternatives, modifications and variances which fall with the scope of the appended claims.

What is claimed is:

**1**. A system of linked appliances comprising:

a microwave oven connected to a source of power and having a control circuit for controlling the operation of the microwave oven;

a first power supply outlet provided on the microwave oven;

a refrigerator connected to the source of power by connection to the first power supply outlet;

a second power supply outlet connected to the source of power through the control circuit, the second power supply outlet adapted to be electrically connected to at least one device having lower power consumption requirements than power requirements of the refrigerator;

sensing components connected to sense current draw at the second power supply outlet, and generating signals indicative thereof;

wherein the control circuit is configured to enable or disable power to the microwave oven, the first power supply outlet and the second power supply outlet, and wherein the control circuit:

disables the refrigerator and the second power supply outlet, when the microwave oven draws cooking power; and

enables the second power supply outlet when the microwave oven does not draw cooking power; and

wherein the microwave oven includes a front portion, wherein the front portion includes a door and a front control panel, wherein the front control panel includes the second power supply outlet, wherein the second power supply outlet includes at least one USB port which is not electrically powered and inoperative when the microwave oven draws cooking power.

**2**. The system according to claim **1** wherein the control circuit further disables the second power supply outlet when signals generated by the sensing components indicate current draw at the second power supply outlet in excess of a predetermined limit.

**3**. The system according to claim **2**, and further comprising a visible indicator on the front control panel, wherein the visible indicator changes visible condition responsive to the second power supply outlet being electrically disabled or enabled.

**4**. The system according to claim **3** and further comprising a manual input device on the front control panel, wherein the control circuit causes the second power supply outlet to remain disabled after the predetermined limit is exceeded, until at least one input is received through the manual input device.

**5**. The system according to claim **1**, wherein the control circuit starts a timer clock when the refrigerator is disabled and prevents the subsequent enabling of the refrigerator before the expiration of a predetermined time limit.

**6**. The system according to claim **5**, wherein the predetermined time period is three minutes.

**7**. The system according to claim **1**, wherein the second power supply outlet includes at least two USB ports configured when electrically enabled to provide power to charge battery operated electronic devices, and wherein the sensing components are operative to sense the current demanded at each of the USB ports.

**8**. The system according to claim **1**, wherein the sensing components further include

a first current sensor operative to monitor current draw on the first power supply outlet, and

a second current sensor operative to monitor current draw on the second power supply outlet,

wherein the control circuit, responsive to the first and second current sensors is configured to make a determination that total combined current draw on the first and second power supply outlets exceeds a predetermined value, wherein the control circuit is operative to disable power to the first and second power supply outlets responsive to the determination.

**9**. The system according to claim **8**

wherein the front control panel includes a first reset input device and a second reset input device,

wherein the control circuit is operative to restore electrical power to the disabled first power supply outlet responsive to an input to the first reset input device, and to the disabled second power supply outlet responsive to another input to the second input device.

**10**. The system according to claim **9**

wherein the front control panel includes a first visual indicator associated with the first power supply outlet and a second visual indicator associated with the second power supply outlet,

wherein the first visual indicator gives a visual indication when the first power supply outlet is disabled and the second visual indicator gives the visual indication when the second power supply outlet is disabled.

**11**. The system according to claim **1**,

wherein the second power supply outlet comprises at least one AC outlet and the at least one USB port;

wherein the sensing components further include a first current sensor operative to monitor current draw on the first power supply outlet and a second current sensor operative to monitor total combined current draw on the at least one AC outlet and the at least one USB port,

wherein the control circuit is configured to limit the total combined current draw on the at least one AC outlet and the at least one USB port to no more than a predetermined value.

**12**. A system of linked appliances comprising:

a microwave oven connected to a source of power and having a control circuit for controlling the operation of the microwave oven;

a first power supply outlet provided on the microwave oven;

a refrigerator connected to the source of power by connection to the first power supply outlet;

a second power supply outlet connected to the source of power through the control circuit, the second power supply outlet adapted to be electrically connected to at least one device having lower power requirements than power requirements of the refrigerator;

sensors connected to sense current demanded at the second power supply outlet, and generating signals indicative thereof;

wherein the control circuit is configured to enable or disable power to the microwave oven, the first power

supply outlet and the second power supply outlet, and wherein the control circuit:

disables the refrigerator and the second power supply outlet, when the microwave oven draws cooking power; and

enables the second power supply outlet when the microwave oven does not draw cooking power; and

wherein the microwave oven includes a front portion and a rear portion, wherein the front portion includes the second power supply outlet, wherein the second power supply outlet includes a USB port that is not operative when the microwave oven draws cooking power, and wherein the rear portion includes the first power supply outlet.

**13**. The system according to claim **12** wherein the control circuit further disables the second power supply outlet when the signals indicate current through the second power supply outlet exceeds a predetermined limit.

**14**. The system according to claim **13** wherein the second power supply outlet includes at least one AC outlet and at least one USB port.

**15**. The system according to claim **13**

wherein the front portion includes at least one visual indicator and at least one input device,

wherein the at least one visual indicator visually indicates when the second power supply outlet is enabled or disabled, and

the control circuit is operative to reinstate power to the disabled second power supply outlet responsive to an input to the at least one input device.

**16**. The system according to claim **15**,

wherein the control circuit is operative to disable the first and second power supply outlets when total cumulative power through the first and second power supply outlets exceeds a limit,

wherein the front portion includes a further visual indicator operative to indicate that the first power supply outlet is disabled, and a further input device, wherein a further manual input to the further input device is operative to cause the control circuit to restore power to the disabled first power supply outlet.

**17**. A system of linked appliances comprising:

a microwave oven connected to a source of power and having a control circuit operative to control the operation of the microwave oven;

a first power supply outlet operatively connected to the source of power through operation of the control circuit;

a refrigerator connected to the source of power by connection to the first power supply outlet;

a second power supply outlet operatively connected to the source of power through operation of the control circuit, wherein the second power supply outlet includes at least one USB port;

sensing components connected to sense current demanded at the second power supply outlet, and generating signals indicative thereof;

wherein the control circuit is configured to enable or disable power to the microwave oven, the first power supply outlet and the second power supply outlet, and wherein the control circuit:

disables the refrigerator and the second power supply outlet including the at least one USB port, when the microwave oven draws cooking power; and

wherein the control circuit is configured to disable the second power supply outlet including the at least one USB port, when the refrigerator is operated during refrigerator compressor startup.

**18**. The system according to claim **17**, wherein the first power supply outlet extends on a rear face of the microwave oven and the second power supply outlet extends on a front face of the microwave oven, wherein the second power supply outlet includes at least one AC outlet and the at least one USB port.

**19**. The system according to claim **18**,

wherein the control circuit is operative to cause power to be withdrawn from the at least one AC outlet and the at least one USB port responsive to total cumulative power draw therethrough exceeding a threshold, independent of power draw through the first power supply outlet.

**20**. The system according to claim **19**,

wherein the control circuit is operative to cause power to be withdrawn from all of the first power supply outlet, the at least one USB port and the at least one AC outlet, responsive to total cumulative power draw through all of such first power supply outlet, at least one USB port and at least one AC outlet, exceeding a further threshold.

**21**. The system according to claim **20**, wherein the front face includes

a first visual indicator operative to visually indicate that power has been withdrawn from the first power supply outlet, and

a second visual indicator operative to visually indicate that power has been withdrawn from at least one of the at least one USB port and the at least one AC outlet.

**22**. The system according to claim **21**

wherein the front face includes a first reset input device and a second reset input device,

wherein manual input to the first reset input device is operative to cause the control circuit to cause delivery of electrical power to the first power supply outlet when such first power supply outlet is currently disabled,

wherein manual input to the second reset input device is operative to cause the control circuit to cause delivery of electrical power to at least one of the at least one AC outlet and the at least one USB port, when such at least one AC outlet and USB port are currently disabled.

* * * * *

# EXHIBIT 5

MicroChill

COLLEGE PRODUCTS.COM

## Smart Stop - Internal Smoke Sensor

Reduce hall evacuations and calls to the fire department with our Internal Smoke Sensor.

## Dual USB PORT

Free up outlets and charge your phones, blue-tooth speakers and many other deivices with our Dual USB Ports.

Tamper-Resistant Strap (UL Certified) Ensures proper use of MicroChill design.

-Interior Dimensions-
Oven Capacity: 0.8 cu. ft.

-Interior Volume-
3.2 cu. ft
Fridge Volume: 2.3 cu. ft.
Freezer Volume: .90 cu. ft.

Exterior Dimensions
Height: 44 5/8"
Width: 18 9/16"
Width with door open 180°: 34 3/4"
Depth: 19 3/8"
Depth with door open 90°: 35 1/4"

Cabinet Features
Black Textured Finish
Low Profile Recessed Handles
Reversible Door Hinges
5'6" Power Cord

712-226-3250 www.collegeproducts.com sales@collegeproducts.com

### -MICROWAVE FEATURES-
Dual USB Charging Station
2 - 2.0 Amp Ports
Internal Smoke Sensor
Electronic Control Panel
One Touch Cooking Programs
Kitchen Timer

-Electrical Requirements-
Power: 115V/60 Hz
Start-Up Amps: 2.56
Running Amps: 0.76
Energy kWh/year: 199

### -MICROCHILL FEATURES-

-Refrigerator Features-
1 Adjustable Glass Shelf
1 Glass Crisper Shelf
2 Door Shelves
2-Liter Bottle Storage
1 In-Door Can Rack
Clear Crisper Drawer
Temperature Control
Automatic Defrost
Interior Light
Chill White Interior

-Freezer Features-
True 0 degree freezer
Manual Defrost
1 Ice Cube Tray

-Electrical Requirements-
Power: 120V/60 Hz
Power Output, Cook: 700 watts
Start-Up Amps: 8.5

Cycles Power from Fridge when Microwave is in use to conserve energy and amp consumption. Power is restored to fridge when microwave door is open. EPA Compliant R600a refigerant

Meets Tier 1 specifications by using 30% less energy than the federal standard.

MicroChill®

# 3.2 cu. ft. Dual USB Port MicroChill with Internal Smoke Sensor

www.collegeproducts.com
(712) 226-3250

199 kWh
HIGHEST EFFICIENCY AVAILABLE!

## -REFRIGERATOR FEATURES-

1 Adjustable Glass Shelf
1 Glass Crisper Shelf
2 Door Shelves
2-Liter Bottle Storage
1 In-Door Can Rack
Clear Crisper Drawer
Temperature Control
Automatic Defrost
Interior Light

## -MICROWAVE FEATURES-

Stainless Steel Door Handle
Dual USB Charging Station
2 - 2.0 Amp Ports
Internal Smoke Sensor
Electronic Control Panel
One Touch Cooking Programs
Kitchen Timer
6'7" Power Cord
Available Color: Black

## -FREEZER FEATURES-

True 0 degree freezer
Manual Defrost
1 Ice Cube Tray

## -CABINET FEATURES-

Textured Finish
Low Profile Recessed Handles
Reversible Door Hinges
5'6" Power Cord
Available Colors: Black

## -ELECTRICAL REQUIREMENTS-

Power: 115V/60 Hz
Start-Up Amps: 2.56
Running Amps: 0.76
Energy kWh/year: 199

## -ELECTRICAL REQUIREMENTS-

Power: 120V/60 Hz
Power Output, Cook: 700 watts
Start-Up Amps: 8.5

## Signature Features

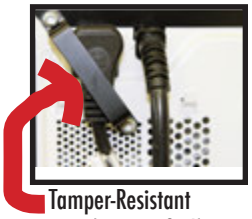

Tamper-Resistant Strap (UL Certified)

Dual USB Charging Station
Conveniently located on the front control panel for easy access and quick charging.

## EXTERIOR DIMENSIONS

Height: 44 5/8"
Width: 18 9/16"
Width with door open 180°: 34 3/4"
Depth: 19 3/8"
Depth with door open 90°: 35 1/4"

## -INTERIOR VOLUME-

3.2 cu. ft
Fridge Volume: 2.3 cu. ft.
Freezer Volume: .90 cu. ft.

## -INTERIOR DIMENSIONS-

Oven Capacity: 0.8 cu. ft.

Cycles Power from Fridge when Microwave is in use to conserve energy and amp consumption.
Power is restored to fridge when microwave door is open.
EPA Compliant R600a refigerant

Meets Tier 1 specifications by using 30% less energy than the federal standard.

MicroChill Copyrighted Materials

JS 44 (Rev. 10/20)

# CIVIL COVER SHEET

Civil Action No. 6:22-cv-00459

The JS 44 civil cover sheet and the information contained herein neither replace nor supplement the filing and service of pleadings or other papers as required by law, except as provided by local rules of court. This form, approved by the Judicial Conference of the United States in September 1974, is required for the use of the Clerk of Court for the purpose of initiating the civil docket sheet. *(SEE INSTRUCTIONS ON NEXT PAGE OF THIS FORM.)*

**I. (a) PLAINTIFFS**

Intirion Corporation

**(b)** County of Residence of First Listed Plaintiff _____
*(EXCEPT IN U.S. PLAINTIFF CASES)*

**(c)** Attorneys *(Firm Name, Address, and Telephone Number)*

Dan MacLemore, Beard Kultgen, PLLC
220 South 4th Street, Waco, Tx 76701; 254-776-5500

**DEFENDANTS**

College Productions, Inc.

County of Residence of First Listed Defendant _____
*(IN U.S. PLAINTIFF CASES ONLY)*

NOTE: IN LAND CONDEMNATION CASES, USE THE LOCATION OF THE TRACT OF LAND INVOLVED.

Attorneys *(If Known)*

## II. BASIS OF JURISDICTION *(Place an "X" in One Box Only)*

- [ ] 1 U.S. Government Plaintiff
- [x] 3 Federal Question *(U.S. Government Not a Party)*
- [ ] 2 U.S. Government Defendant
- [ ] 4 Diversity *(Indicate Citizenship of Parties in Item III)*

## III. CITIZENSHIP OF PRINCIPAL PARTIES *(Place an "X" in One Box for Plaintiff and One Box for Defendant)*
*(For Diversity Cases Only)*

| | PTF | DEF | | PTF | DEF |
|---|---|---|---|---|---|
| Citizen of This State | [ ] 1 | [ ] 1 | Incorporated *or* Principal Place of Business In This State | [ ] 4 | [ ] 4 |
| Citizen of Another State | [ ] 2 | [ ] 2 | Incorporated *and* Principal Place of Business In Another State | [ ] 5 | [ ] 5 |
| Citizen or Subject of a Foreign Country | [ ] 3 | [ ] 3 | Foreign Nation | [ ] 6 | [ ] 6 |

## IV. NATURE OF SUIT *(Place an "X" in One Box Only)*

Click here for: Nature of Suit Code Descriptions.

**CONTRACT**
- [ ] 110 Insurance
- [ ] 120 Marine
- [ ] 130 Miller Act
- [ ] 140 Negotiable Instrument
- [ ] 150 Recovery of Overpayment & Enforcement of Judgment
- [ ] 151 Medicare Act
- [ ] 152 Recovery of Defaulted Student Loans (Excludes Veterans)
- [ ] 153 Recovery of Overpayment of Veteran's Benefits
- [ ] 160 Stockholders' Suits
- [ ] 190 Other Contract
- [ ] 195 Contract Product Liability
- [ ] 196 Franchise

**REAL PROPERTY**
- [ ] 210 Land Condemnation
- [ ] 220 Foreclosure
- [ ] 230 Rent Lease & Ejectment
- [ ] 240 Torts to Land
- [ ] 245 Tort Product Liability
- [ ] 290 All Other Real Property

**TORTS**

**PERSONAL INJURY**
- [ ] 310 Airplane
- [ ] 315 Airplane Product Liability
- [ ] 320 Assault, Libel & Slander
- [ ] 330 Federal Employers' Liability
- [ ] 340 Marine
- [ ] 345 Marine Product Liability
- [ ] 350 Motor Vehicle
- [ ] 355 Motor Vehicle Product Liability
- [ ] 360 Other Personal Injury
- [ ] 362 Personal Injury - Medical Malpractice

**PERSONAL INJURY**
- [ ] 365 Personal Injury - Product Liability
- [ ] 367 Health Care/ Pharmaceutical Personal Injury Product Liability
- [ ] 368 Asbestos Personal Injury Product Liability

**PERSONAL PROPERTY**
- [ ] 370 Other Fraud
- [ ] 371 Truth in Lending
- [ ] 380 Other Personal Property Damage
- [ ] 385 Property Damage Product Liability

**CIVIL RIGHTS**
- [ ] 440 Other Civil Rights
- [ ] 441 Voting
- [ ] 442 Employment
- [ ] 443 Housing/ Accommodations
- [ ] 445 Amer. w/Disabilities - Employment
- [ ] 446 Amer. w/Disabilities - Other
- [ ] 448 Education

**PRISONER PETITIONS**

**Habeas Corpus:**
- [ ] 463 Alien Detainee
- [ ] 510 Motions to Vacate Sentence
- [ ] 530 General
- [ ] 535 Death Penalty

**Other:**
- [ ] 540 Mandamus & Other
- [ ] 550 Civil Rights
- [ ] 555 Prison Condition
- [ ] 560 Civil Detainee - Conditions of Confinement

**FORFEITURE/PENALTY**
- [ ] 625 Drug Related Seizure of Property 21 USC 881
- [ ] 690 Other

**LABOR**
- [ ] 710 Fair Labor Standards Act
- [ ] 720 Labor/Management Relations
- [ ] 740 Railway Labor Act
- [ ] 751 Family and Medical Leave Act
- [ ] 790 Other Labor Litigation
- [ ] 791 Employee Retirement Income Security Act

**IMMIGRATION**
- [ ] 462 Naturalization Application
- [ ] 465 Other Immigration Actions

**BANKRUPTCY**
- [ ] 422 Appeal 28 USC 158
- [ ] 423 Withdrawal 28 USC 157

**PROPERTY RIGHTS**
- [ ] 820 Copyrights
- [x] 830 Patent
- [ ] 835 Patent - Abbreviated New Drug Application
- [ ] 840 Trademark
- [ ] 880 Defend Trade Secrets Act of 2016

**SOCIAL SECURITY**
- [ ] 861 HIA (1395ff)
- [ ] 862 Black Lung (923)
- [ ] 863 DIWC/DIWW (405(g))
- [ ] 864 SSID Title XVI
- [ ] 865 RSI (405(g))

**FEDERAL TAX SUITS**
- [ ] 870 Taxes (U.S. Plaintiff or Defendant)
- [ ] 871 IRS—Third Party 26 USC 7609

**OTHER STATUTES**
- [ ] 375 False Claims Act
- [ ] 376 Qui Tam (31 USC 3729(a))
- [ ] 400 State Reapportionment
- [ ] 410 Antitrust
- [ ] 430 Banks and Banking
- [ ] 450 Commerce
- [ ] 460 Deportation
- [ ] 470 Racketeer Influenced and Corrupt Organizations
- [ ] 480 Consumer Credit (15 USC 1681 or 1692)
- [ ] 485 Telephone Consumer Protection Act
- [ ] 490 Cable/Sat TV
- [ ] 850 Securities/Commodities/ Exchange
- [ ] 890 Other Statutory Actions
- [ ] 891 Agricultural Acts
- [ ] 893 Environmental Matters
- [ ] 895 Freedom of Information Act
- [ ] 896 Arbitration
- [ ] 899 Administrative Procedure Act/Review or Appeal of Agency Decision
- [ ] 950 Constitutionality of State Statutes

## V. ORIGIN *(Place an "X" in One Box Only)*

- [x] 1 Original Proceeding
- [ ] 2 Removed from State Court
- [ ] 3 Remanded from Appellate Court
- [ ] 4 Reinstated or Reopened
- [ ] 5 Transferred from Another District *(specify)*
- [ ] 6 Multidistrict Litigation - Transfer
- [ ] 8 Multidistrict Litigation - Direct File

## VI. CAUSE OF ACTION

Cite the U.S. Civil Statute under which you are filing ***(Do not cite jurisdictional statutes unless diversity)***:
35 U.S.C. §§ 271, 281, 284 and 285

Brief description of cause:
Patent infringement

## VII. REQUESTED IN COMPLAINT:

[ ] CHECK IF THIS IS A **CLASS ACTION** UNDER RULE 23, F.R.Cv.P.

**DEMAND $**

CHECK YES only if demanded in complaint:
**JURY DEMAND:** [x] Yes [ ] No

## VIII. RELATED CASE(S) IF ANY

*(See instructions):* JUDGE _____ DOCKET NUMBER _____

DATE
5/6/2022

SIGNATURE OF ATTORNEY OF RECORD
/s/ Dan MacLemore

**FOR OFFICE USE ONLY**

RECEIPT # _____ AMOUNT _____ APPLYING IFP _____ JUDGE _____ MAG. JUDGE _____

# INSTRUCTIONS FOR ATTORNEYS COMPLETING CIVIL COVER SHEET FORM JS 44

Authority For Civil Cover Sheet

The JS 44 civil cover sheet and the information contained herein neither replaces nor supplements the filings and service of pleading or other papers as required by law, except as provided by local rules of court. This form, approved by the Judicial Conference of the United States in September 1974, is required for the use of the Clerk of Court for the purpose of initiating the civil docket sheet. Consequently, a civil cover sheet is submitted to the Clerk of Court for each civil complaint filed. The attorney filing a case should complete the form as follows:

**I.(a)** **Plaintiffs-Defendants.** Enter names (last, first, middle initial) of plaintiff and defendant. If the plaintiff or defendant is a government agency, use only the full name or standard abbreviations. If the plaintiff or defendant is an official within a government agency, identify first the agency and then the official, giving both name and title.

**(b)** **County of Residence.** For each civil case filed, except U.S. plaintiff cases, enter the name of the county where the first listed plaintiff resides at the time of filing. In U.S. plaintiff cases, enter the name of the county in which the first listed defendant resides at the time of filing. (NOTE: In land condemnation cases, the county of residence of the "defendant" is the location of the tract of land involved.)

**(c)** **Attorneys.** Enter the firm name, address, telephone number, and attorney of record. If there are several attorneys, list them on an attachment, noting in this section "(see attachment)".

**II.** **Jurisdiction.** The basis of jurisdiction is set forth under Rule 8(a), F.R.Cv.P., which requires that jurisdictions be shown in pleadings. Place an "X" in one of the boxes. If there is more than one basis of jurisdiction, precedence is given in the order shown below.
United States plaintiff. (1) Jurisdiction based on 28 U.S.C. 1345 and 1348. Suits by agencies and officers of the United States are included here.
United States defendant. (2) When the plaintiff is suing the United States, its officers or agencies, place an "X" in this box.
Federal question. (3) This refers to suits under 28 U.S.C. 1331, where jurisdiction arises under the Constitution of the United States, an amendment to the Constitution, an act of Congress or a treaty of the United States. In cases where the U.S. is a party, the U.S. plaintiff or defendant code takes precedence, and box 1 or 2 should be marked.
Diversity of citizenship. (4) This refers to suits under 28 U.S.C. 1332, where parties are citizens of different states. When Box 4 is checked, the citizenship of the different parties must be checked. (See Section III below**; NOTE: federal question actions take precedence over diversity cases.**)

**III.** **Residence (citizenship) of Principal Parties.** This section of the JS 44 is to be completed if diversity of citizenship was indicated above. Mark this section for each principal party.

**IV.** **Nature of Suit.** Place an "X" in the appropriate box. If there are multiple nature of suit codes associated with the case, pick the nature of suit code that is most applicable. Click here for: Nature of Suit Code Descriptions.

**V.** **Origin.** Place an "X" in one of the seven boxes.
Original Proceedings. (1) Cases which originate in the United States district courts.
Removed from State Court. (2) Proceedings initiated in state courts may be removed to the district courts under Title 28 U.S.C., Section 1441.
Remanded from Appellate Court. (3) Check this box for cases remanded to the district court for further action. Use the date of remand as the filing date.
Reinstated or Reopened. (4) Check this box for cases reinstated or reopened in the district court. Use the reopening date as the filing date.
Transferred from Another District. (5) For cases transferred under Title 28 U.S.C. Section 1404(a). Do not use this for within district transfers or multidistrict litigation transfers.
Multidistrict Litigation – Transfer. (6) Check this box when a multidistrict case is transferred into the district under authority of Title 28 U.S.C. Section 1407.
Multidistrict Litigation – Direct File. (8) Check this box when a multidistrict case is filed in the same district as the Master MDL docket.
**PLEASE NOTE THAT THERE IS NOT AN ORIGIN CODE 7.** Origin Code 7 was used for historical records and is no longer relevant due to changes in statue.

**VI.** **Cause of Action.** Report the civil statute directly related to the cause of action and give a brief description of the cause. **Do not cite jurisdictional statutes unless diversity.** Example: U.S. Civil Statute: 47 USC 553 Brief Description: Unauthorized reception of cable service.

**VII.** **Requested in Complaint.** Class Action. Place an "X" in this box if you are filing a class action under Rule 23, F.R.Cv.P.
Demand. In this space enter the actual dollar amount being demanded or indicate other demand, such as a preliminary injunction.
Jury Demand. Check the appropriate box to indicate whether or not a jury is being demanded.

**VIII.** **Related Cases.** This section of the JS 44 is used to reference related pending cases, if any. If there are related pending cases, insert the docket numbers and the corresponding judge names for such cases.

**Date and Attorney Signature.** Date and sign the civil cover sheet.