US 20090188911A1

(19) United States

(12) Patent Application Publication

Emma

(10) Pub. No.: US 2009/0188911 A1

(43) Pub. Date: Jul. 30, 2009

(54) MULTIPLE LINKED APPLIANCES WITH AUXILIARY OUTLET

(75) Inventor: **Phillip Emma**, Topsfield, MA (US)

Correspondence Address:
LINDA SERAFINI, ESQ. VP & GENERAL COUNSEL
MAC-GRAY CORPORATION
SUITE 400, 404 WYMAN STREET
WALTHAM, MA 02451 (US)

(73) Assignee: MAC-GRAY CORPORATION

(21) Appl. No.: 12/317,632

(22) Filed: Dec. 23, 2008

Related U.S. Application Data

(60) Provisional application No. 61/009,419, filed on Dec. 28, 2007.

Publication Classification

(51) Int. Cl.
H05B 6/64 (2006.01)
H05B 6/66 (2006.01)

(52) U.S. Cl. 219/679; 219/482

(57) ABSTRACT

A combination microwave and refrigerator system is constructed having a single plug input supply. The microwave oven is adapted to provide power to a refrigerator, and to auxiliary receptacles adapted for low power operation. The current to the low power receptacles and the refrigerator is controlled by the controller for the microwave oven according to the duty cycles of the connected appliances to avoid overload conditions.

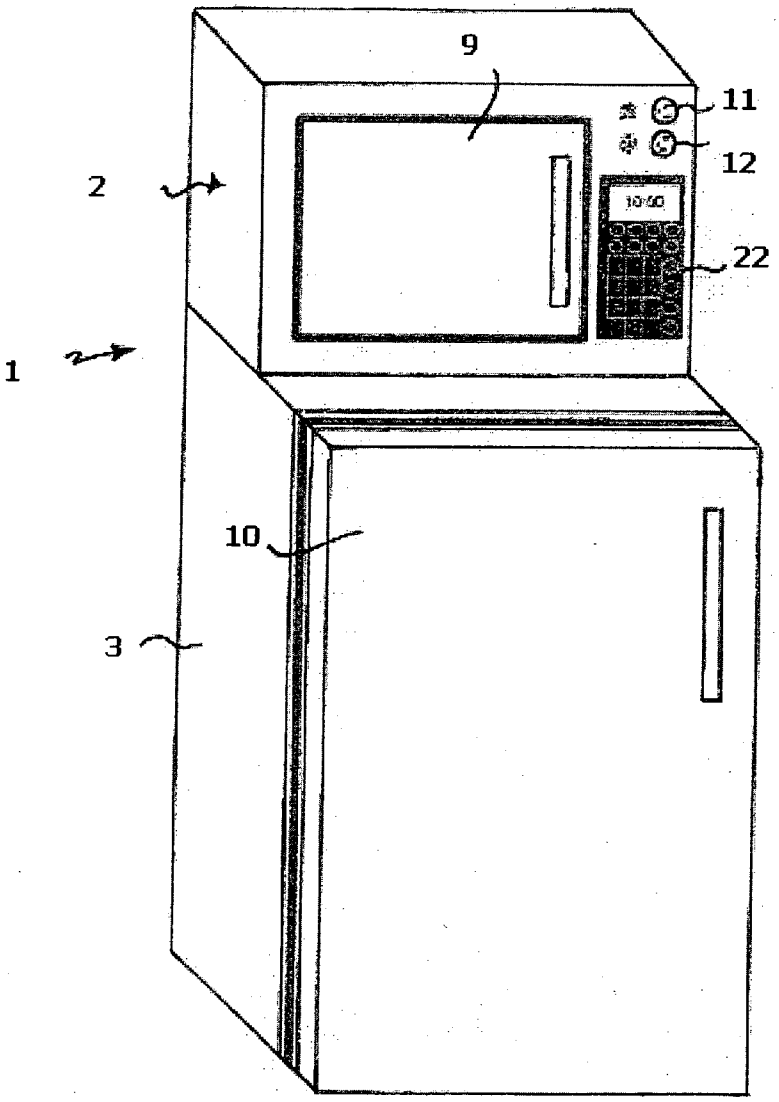

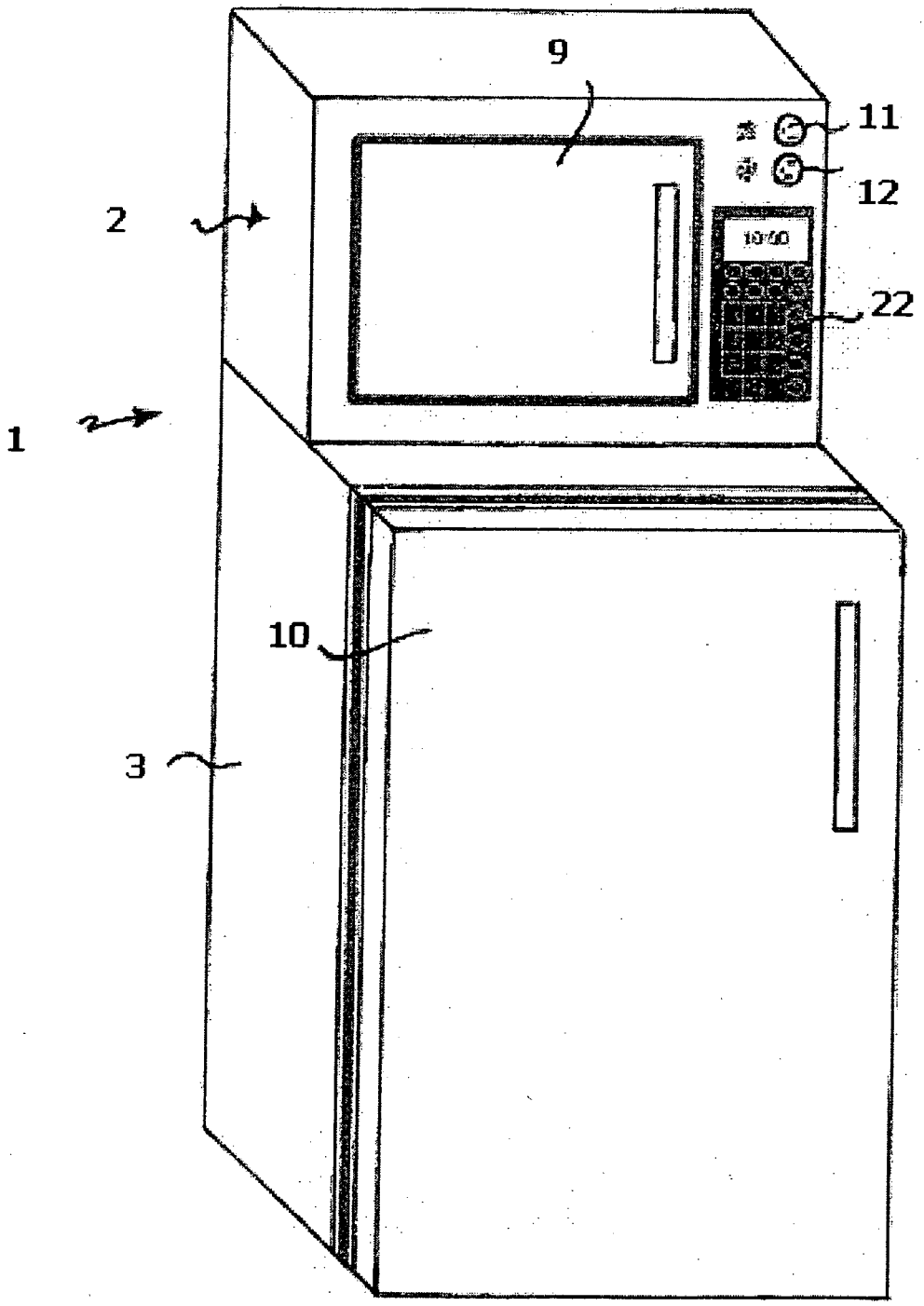

FIGURE 1

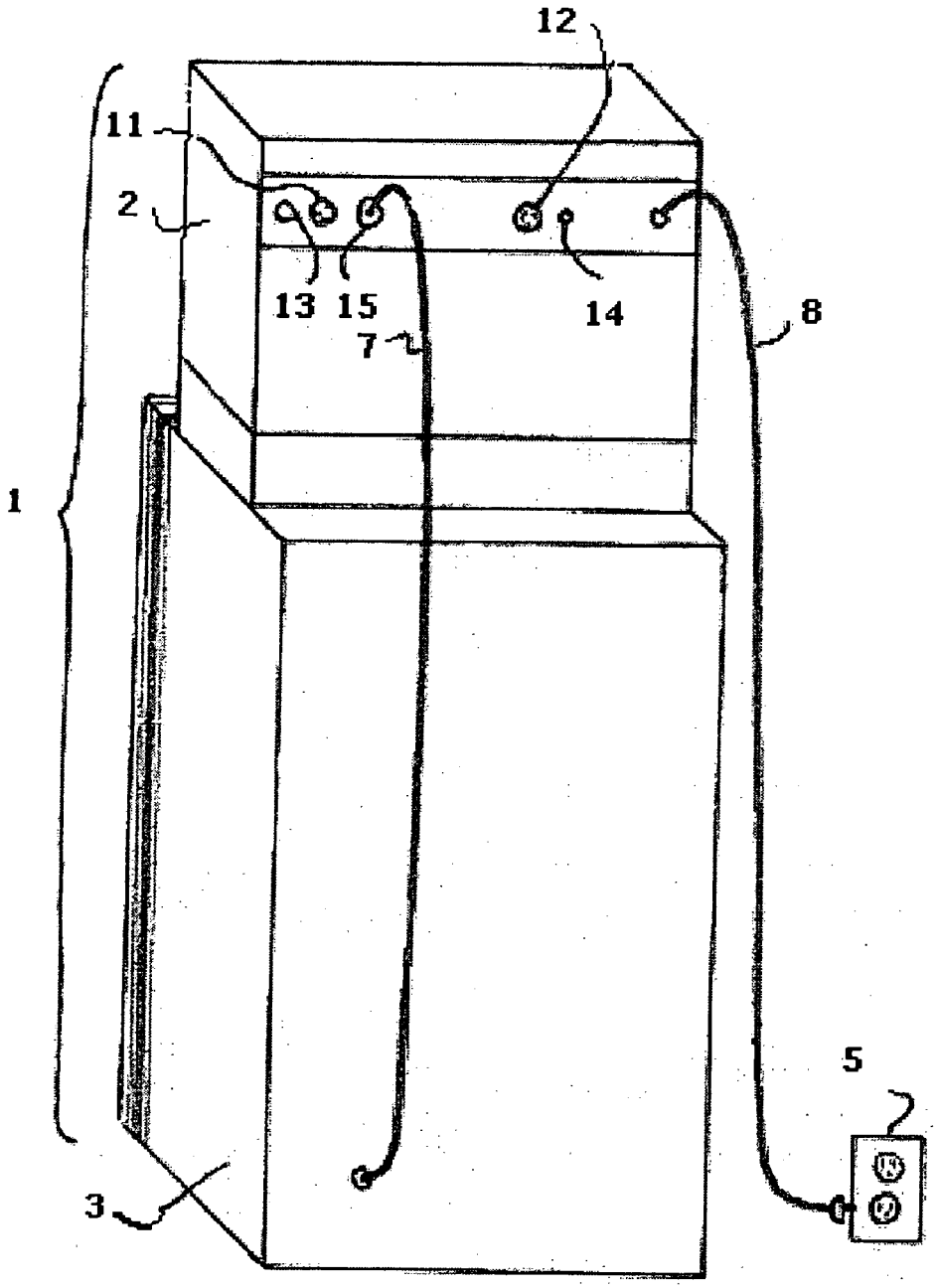

FIGURE 2

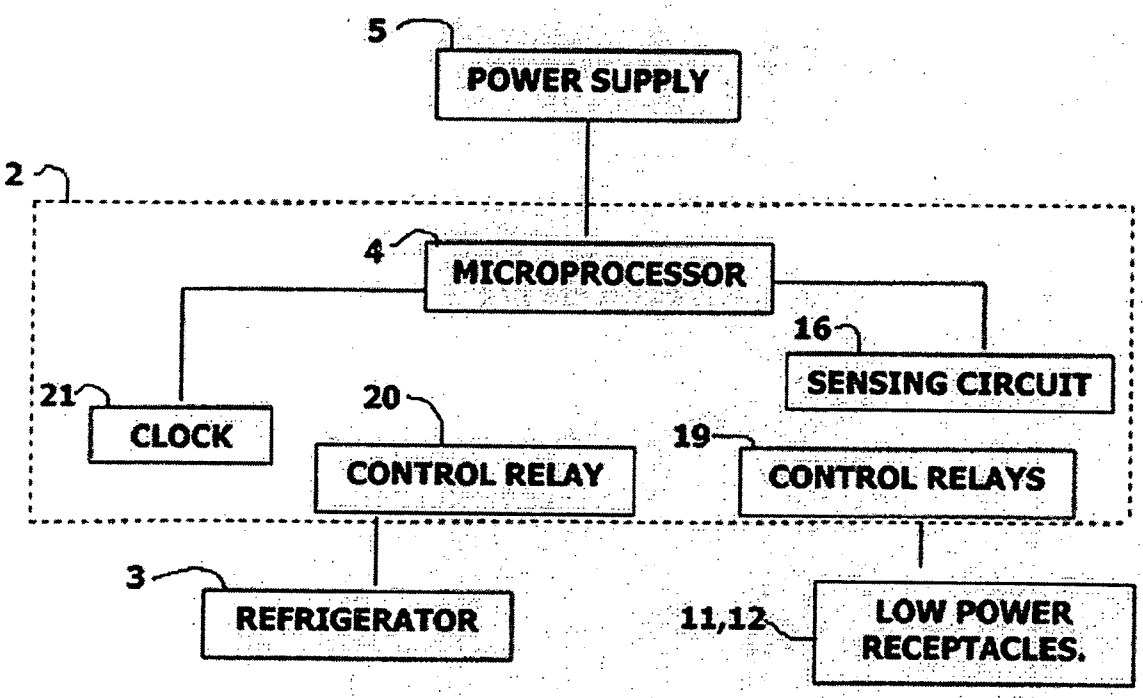
5
POWER SUPPLY
2
4
MICROPROCESSOR
16
SENSING CIRCUIT
21
CLOCK
20
CONTROL RELAY
19
CONTROL RELAYS
3
REFRIGERATOR
11,12
LOW POWER RECEPTACLES.

FIGURE 3

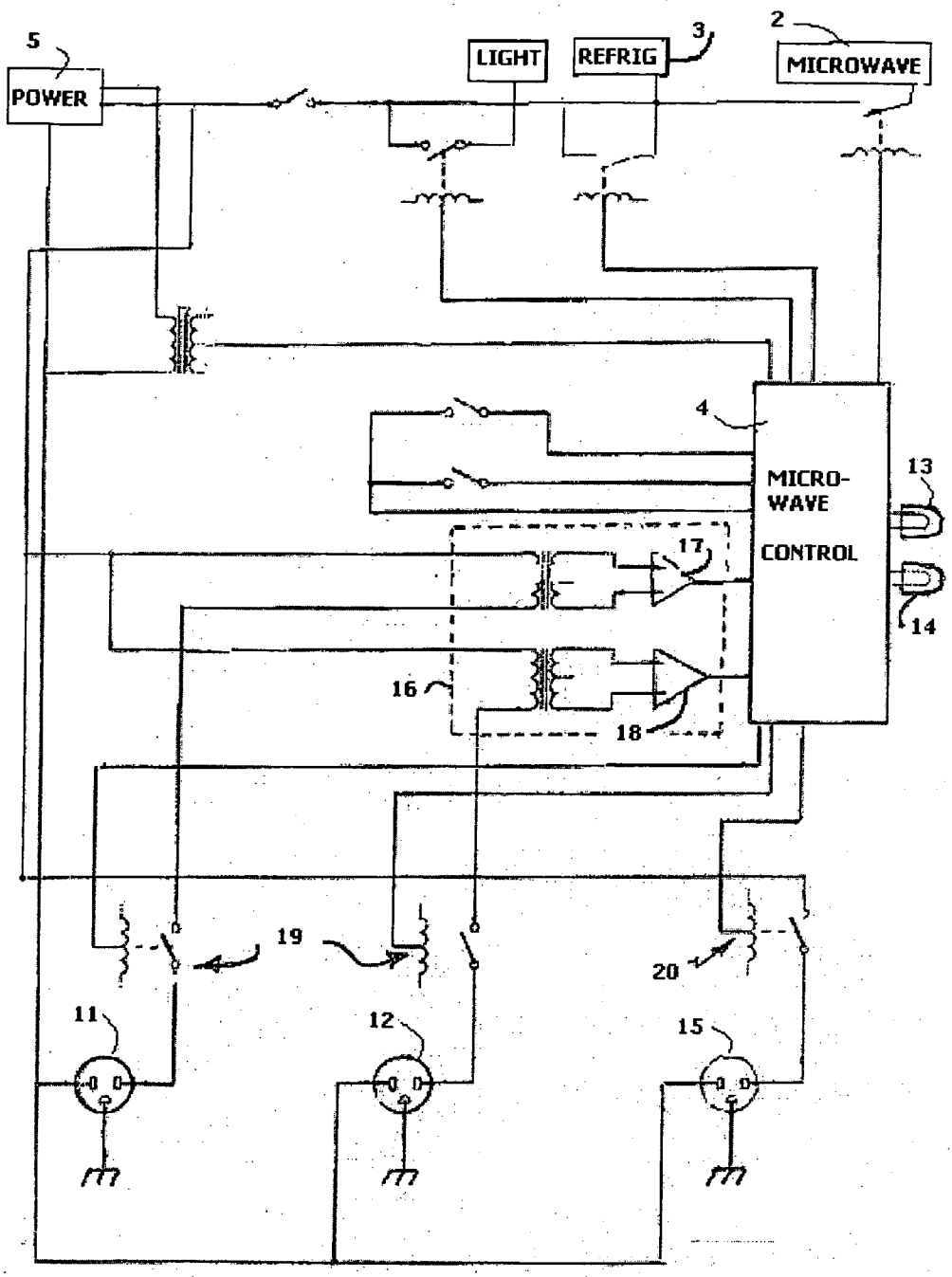
5
POWER
LIGHT
REFRIG
3
2
MICROWAVE
4
MICRO-
WAVE
CONTROL
13
14
17
16
18
19
20
11
12
15

FIGURE 4

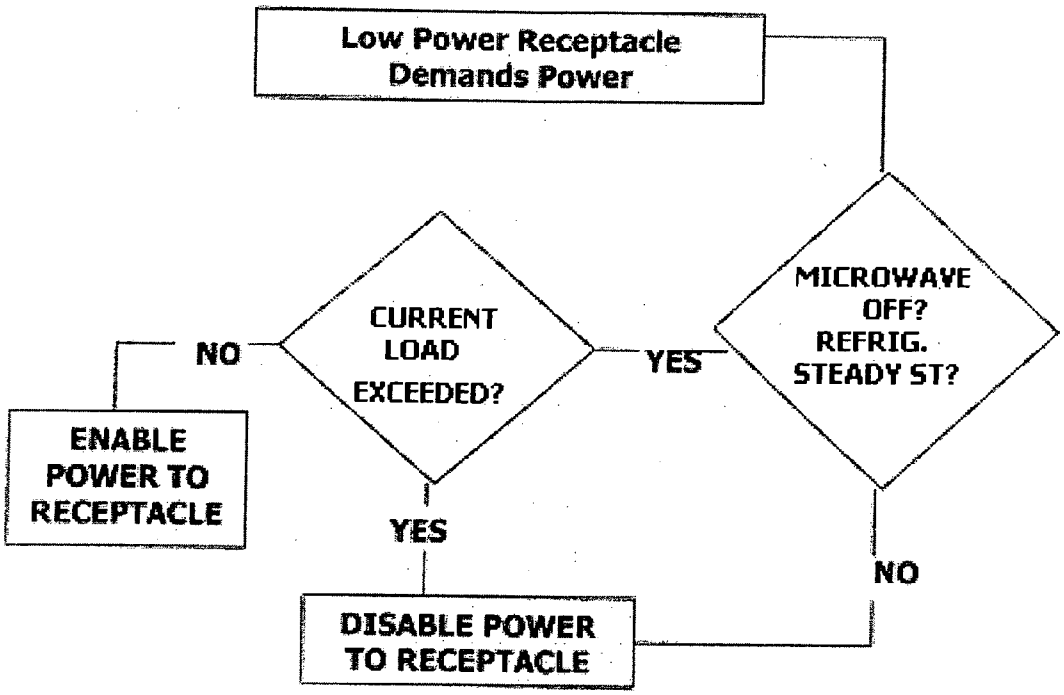

FIGURE 5

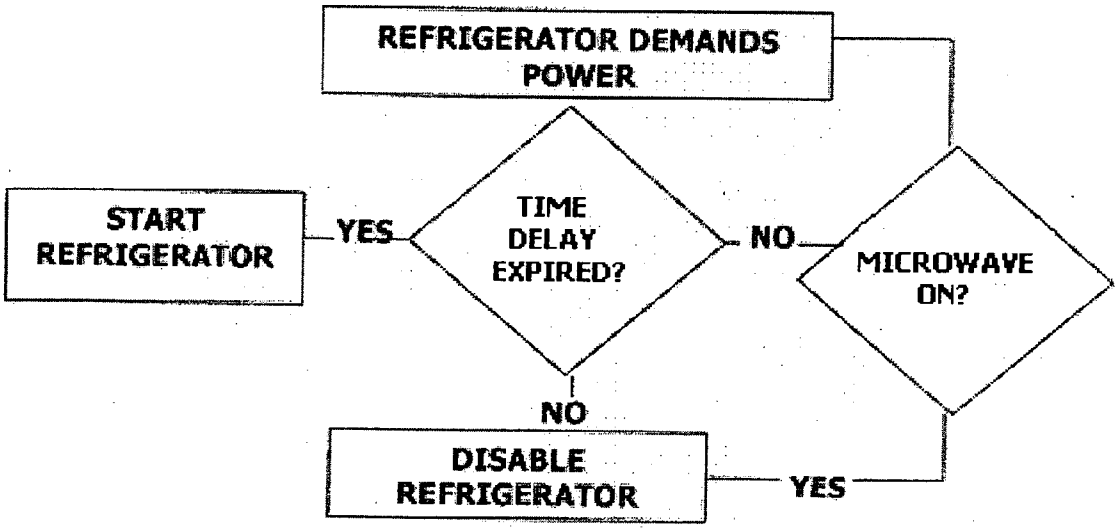

FIGURE 6

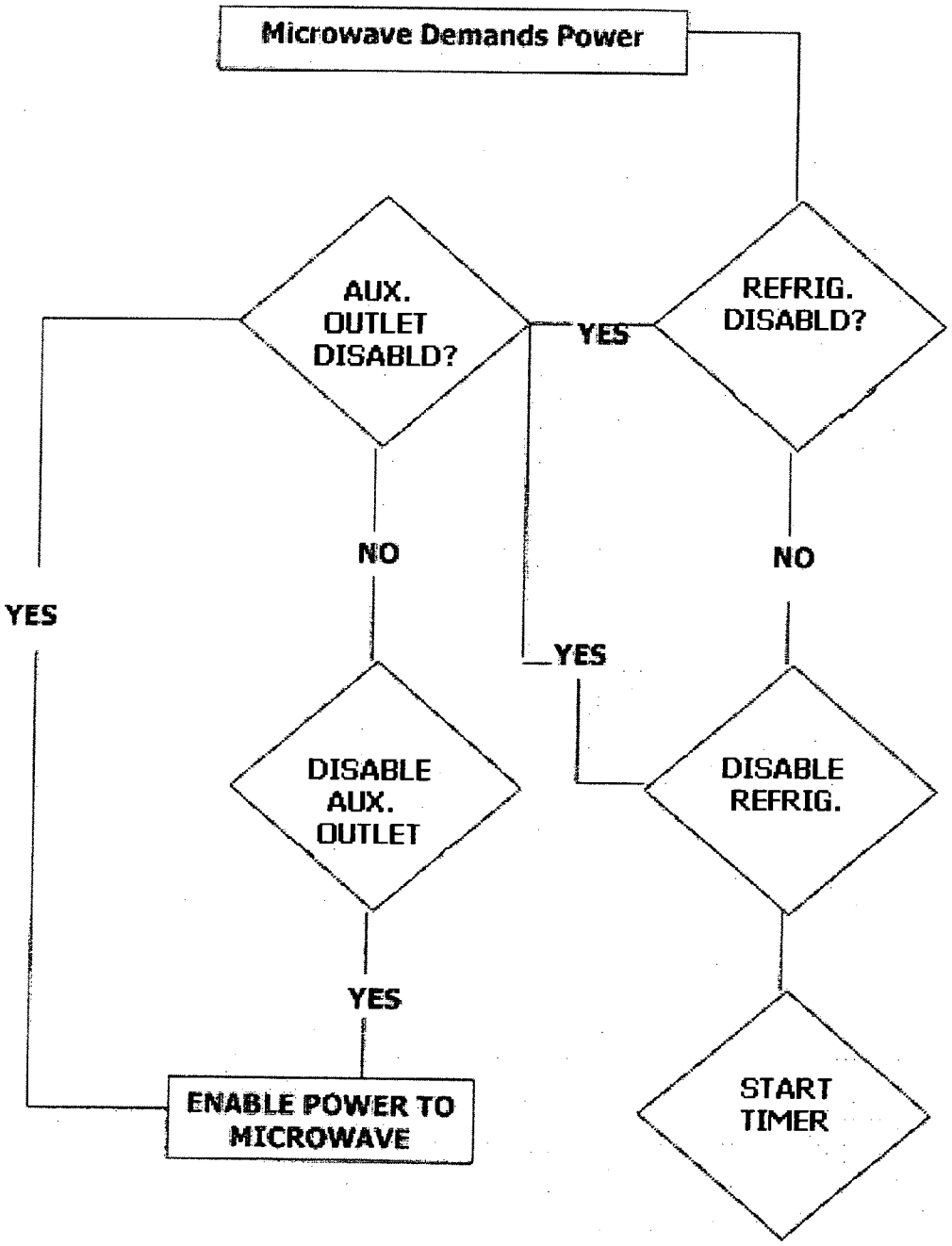
Microwave Demands Power
AUX. OUTLET DISABLD?
REFRIG. DISABLD?
YES
NO
NO
YES
YES
DISABLE AUX. OUTLET
DISABLE REFRIG.
YES
ENABLE POWER TO MICROWAVE
START TIMER

FIGURE 7

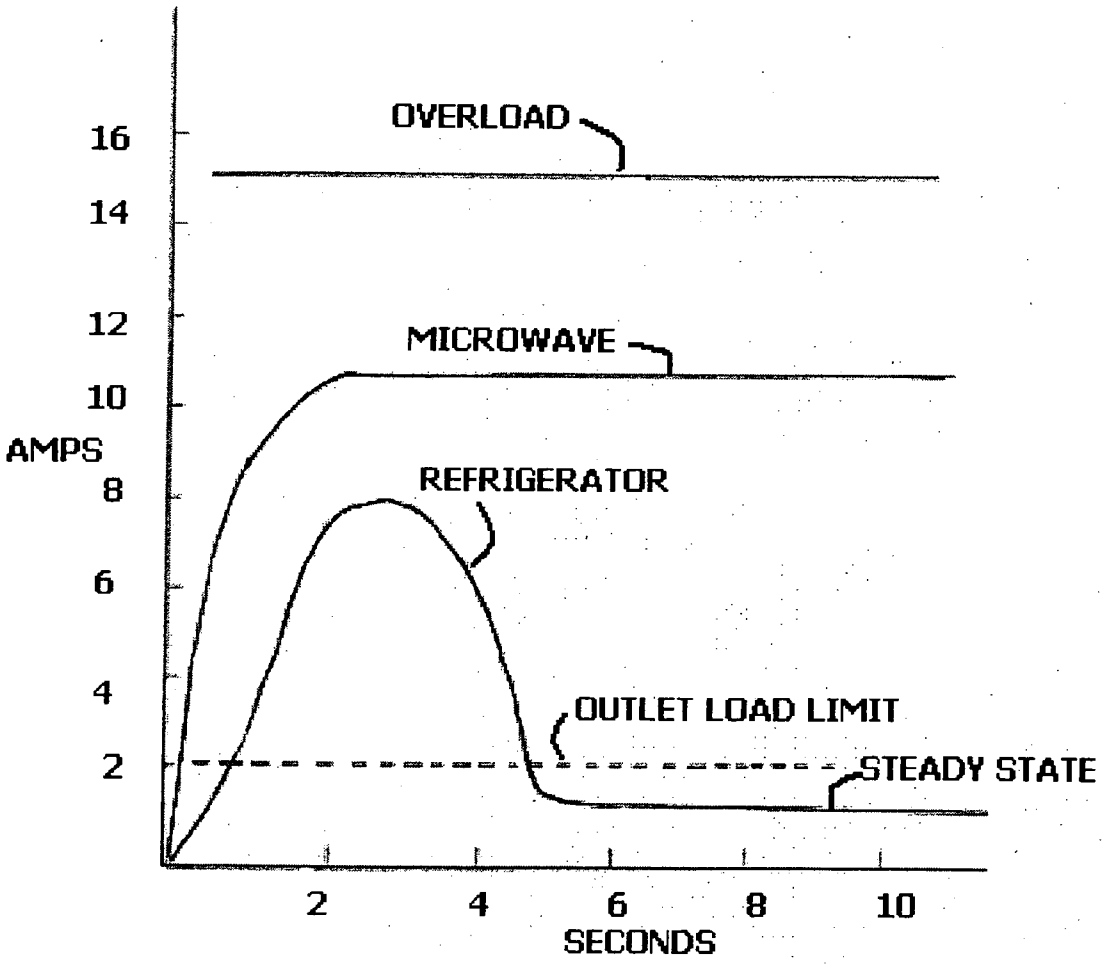
OVERLOAD
MICROWAVE
REFRIGERATOR
OUTLET LOAD LIMIT
STEADY STATE
AMPS
16
14
12
10
8
6
4
2
2
4
6
8
10
SECONDS

FIGURE 8

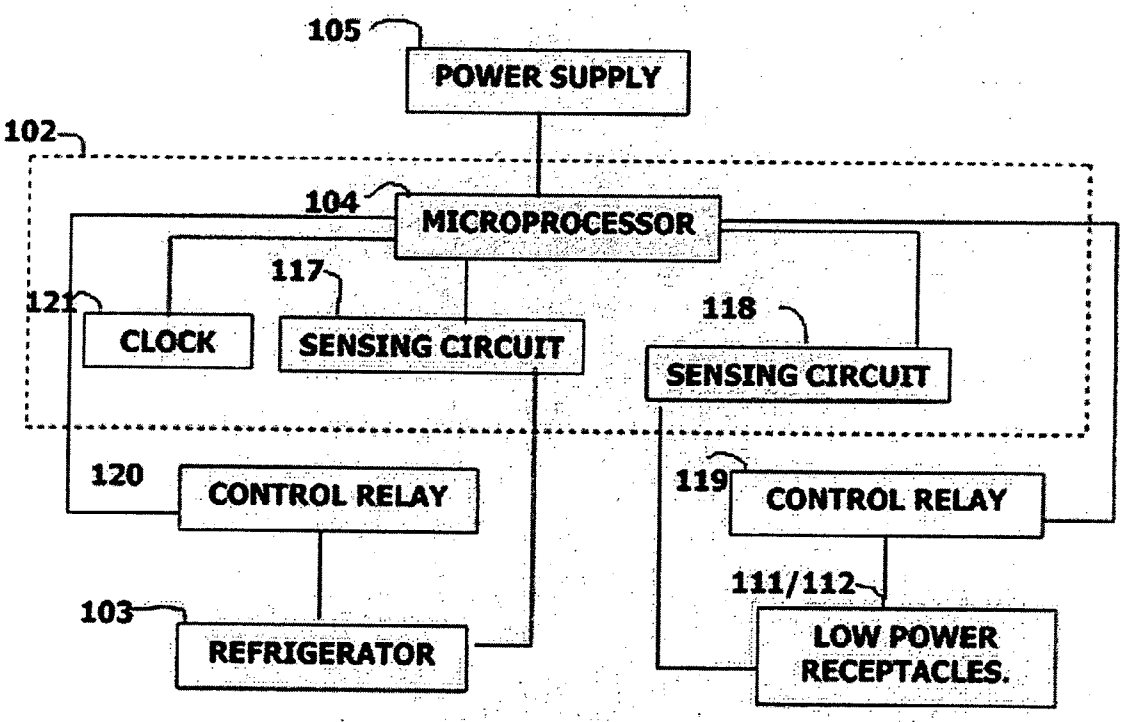
105
POWER SUPPLY
102
104
MICROPROCESSOR
117
121
CLOCK
SENSING CIRCUIT
118
SENSING CIRCUIT
120
CONTROL RELAY
119
CONTROL RELAY
111/112
103
REFRIGERATOR
LOW POWER RECEPTACLES.

FIGURE 9

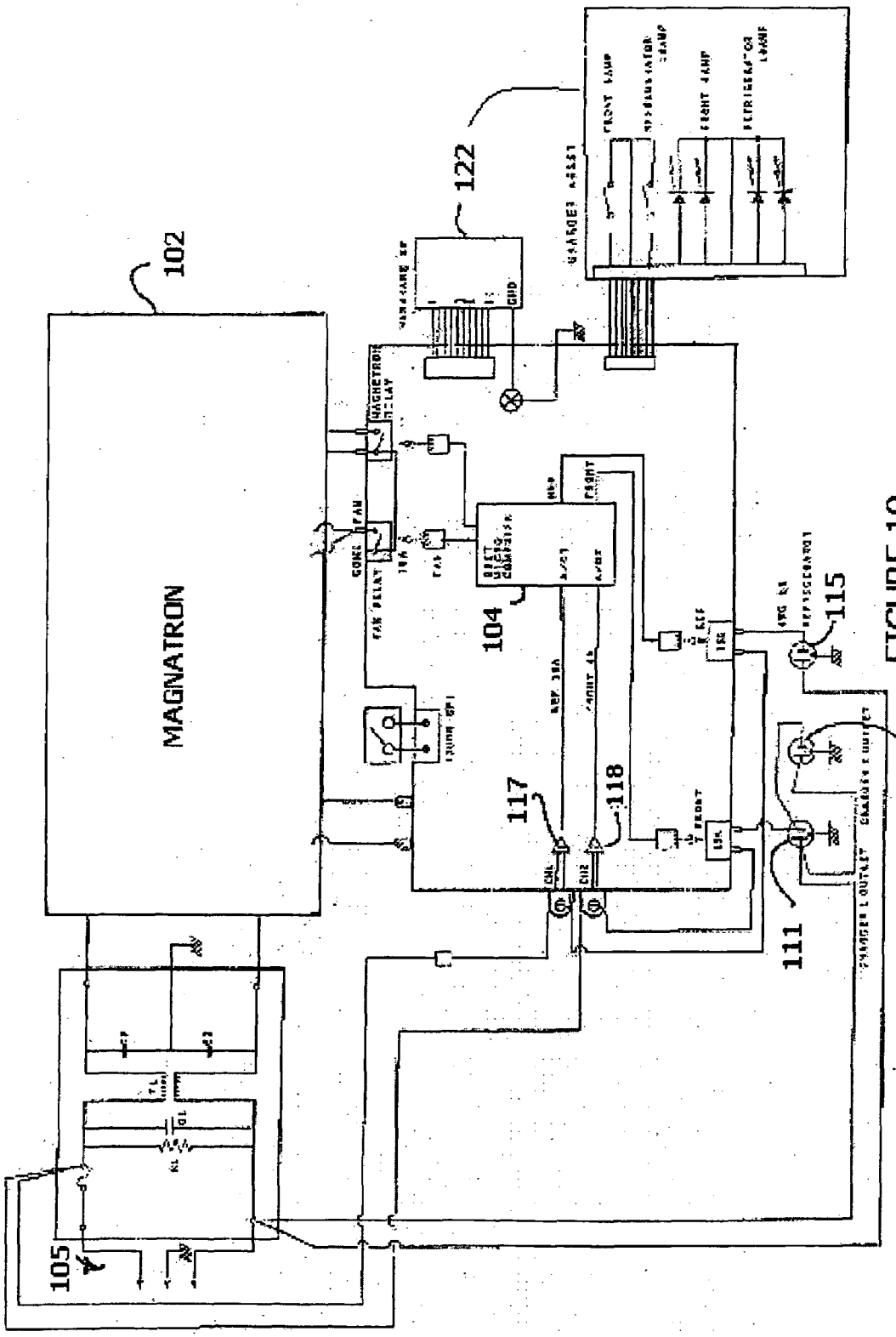

FIGURE 10

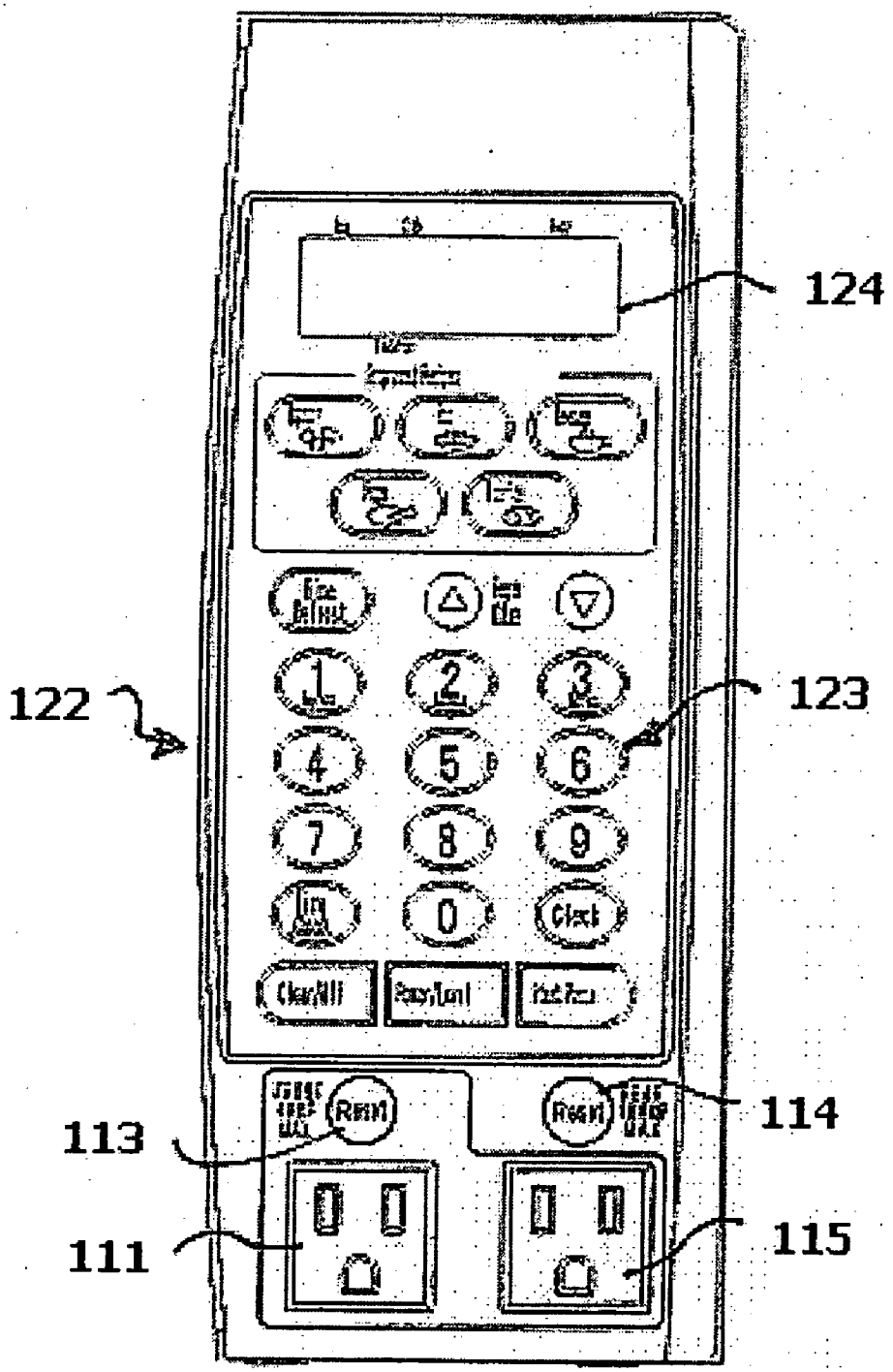

FIGURE 11

MULTIPLE LINKED APPLIANCES WITH AUXILIARY OUTLET

1. RELATED APPLICATIONS

[0001] This application claims priority from Provisional Application for Patent No. 61/009,419, filed Dec. 28, 2007.

2. FIELD OF THE INVENTION

[0002] This application relates to a system of multiple linked appliances connected to a power supply through a single supply cord. In particular a refrigerator and microwave are connected for single plug operation while providing additional special purpose outlets.

BRIEF DESCRIPTION OF RELATED DEVELOPMENTS

[0003] Combination refrigerator and microwave oven systems are described in U.S. Pat. Nos. 4,880,954 and 4,847,722. In the devices described, the refrigerator is connected to the power supply and provides a connection for the microwave oven to be connected to the same supply. A single plug, therefore, serves to connect both appliances and the current required for each appliances is supplied by the same supply cord and circuit.

[0004] To make this combination attractive for use in dorm rooms, hotel rooms, recreational vehicles, tractor trailer cabs, and other similar locations, it is necessary to provide some means by which the peak currents of both appliances are not demanded from the supply at the same time. Many household circuits are protected from overload conditions by means of an automatic circuit breaker that is activated when current in the circuit exceeds the breaker rating. This is 15 amps in many circuits.

[0005] The duty cycle of a refrigerator used in these combined systems includes a current spike that occurs during the first few seconds of operation. This is the start up current for the refrigerator compressor and is considerably reduced, as the compressor obtains its operational speed. In typical refrigerator appliances the peak current may be in the range of 7 to 9 amps, while the steady state current may level off at 1.4 amps or less. A microwave oven demands a relatively steady 8 to 13 amps. It is apparent that an overload condition will occur frequently, when both appliances are in use, unless some control is exercised.

[0006] In the '954 patent the compressor power is disabled when the microwave is energized. This is accomplished by coupling the timer of the microwave to the compressor power. In addition a door interlock enables the compressor, since the microwave is disabled when the door is open. The '722 patent describes a control circuit for a combination microwave and refrigerator system in which a relay disables the microwave oven for a period of time depending on the rating of the compressor, when the compressor of the refrigerator is energized.

[0007] It would be advantageous to construct a combination microwave/refrigerator system, that also provides auxiliary outlets for low power applications, such as for the purpose of recharging cellular phones, operating lap top computers and other low power devices, while controlling the operation of the appliances to avoid overload conditions.

SUMMARY OF THE INVENTION

[0008] In an embodiment of this invention, a combination microwave and refrigerator system is constructed having a single plug input supply. The microwave oven is adapted to provide power to a refrigerator, and to auxiliary receptacles adapted for low power operation. The microwave oven includes a microprocessor controller adapted to monitor operation of the refrigerator compressor and controls the power to the microwave magnetron and other components. The current to the low power receptacles are separately monitored for control by the microwave controller. The microwave controller is adapted to balance the duty cycles of the connected appliances attached to avoid overload conditions. A control algorithm is implemented internally within the microwave controller. A receptacle for the refrigerator and the low power auxiliary receptacle may be implemented as part of the microwave control panel.

[0009] In one embodiment, the auxiliary outlets are constructed to provide low power for the purpose of recharging cellular phones, personal media devices, digital cameras, in addition to operating lap top computers and other low power devices. The current to the auxiliary outlets is sensed and provided to the microwave controller.

[0010] In another embodiment, the power to the auxiliary outlets is disabled by the microwave controller when the microwave magnetron is energized or whenever the current to the auxiliary outlets exceeds a preset value.

[0011] In one embodiment, a control model is established and executed by the microwave controller. The model is dependent on the state of operation of the microwave magnetron. As part of the control model, the power to the compressor is monitored to sense operation of the compressor. When power to the microwave is demanded, the compressor is disabled for a preset minimum period. When microwave demand ceases, refrigerator power is restored provided, that the preset minimum period has expired.

[0012] In another embodiment of the control module, sensing circuits are connected to monitor current to the auxiliary outlets. The control model is adapted to disable the power to the auxiliary receptacles, if the microwave is in operation. In addition the auxiliary receptacles are disabled if a predetermined maximum current is sensed. Another control model is based on operation of the refrigerator and operates to disable the auxiliary receptacles when the compressor is in the start up mode

BRIEF DESCRIPTION OF THE DRAWINGS

[0013] The system of this invention is explained in more detail below with reference to the accompanying drawing, in which:

[0014] FIG. **1** is a front perspective view of an embodiment of an appliance system of this application;

[0015] FIG. **2** is a rear perspective view of the embodiment of FIG. **1** showing an alternative arrangement;

[0016] FIG. **3** is a block diagram of an embodiment of the system of this application;

[0017] FIG. **4** is a schematic diagram of the embodiment of FIG. **3**;

[0018] FIG. **5** is a flow diagram of an embodiment of this application;

[0019] FIG. **6** is a flow diagram of another embodiment of this application;

[0020] FIG. **7** is a flow diagram of another embodiment of this application;

[0021] FIG. **8** is a graph illustrating the duty cycles of the appliances in the system of FIG. **3**;

[0022] FIG. **9** is a block diagram of an alternate embodiment of this application;

[0023] FIG. **10** is a schematic diagram of the embodiment of FIG. **9**; and

[0024] FIG. **11** is an illustration of a control panel of the embodiment of FIG. **9**.

DESCRIPTION OF THE PREFERRED EMBODIMENT

[0025] A multiple linked appliance system **1**, for example, a combination microwave oven **2**, a refrigerator **3** incorporating features of the present invention is illustrated in the figures. Although the present invention will be described with reference to the embodiments shown in the drawings, it should be understood that the present invention may have many alternate forms. In addition, any suitable size, shape or type of elements or materials could be used. The computer operated devices described in this application may be constructed having one or several processors and one or several program product modules stored in one or several memory elements. For illustration, computer components may be described as individual units by function. It should be understood, that in some instances, these functional components may be combined.

[0026] One embodiment of a multi-appliance interconnected system **1** is illustrated in FIG. **1**. This embodiment consists of two stand alone appliances, a refrigerator **3** and a microwave oven **2**. Refrigerator **3** is connected to microwave oven **2** by power cord **7** to refrigerator receptacle **15**, shown at the rear of the microwave **2** in FIG. **2**. Refrigerator **3** is generally subject to control by the microwave microprocessor controller **4** of the microwave oven **2**. A single cord **8**, provides input power to the system **1** from receptacle **5** through microwave **2**. In the case where stand alone appliances are used, as shown in FIGS. **1** and **2**, microwave oven **2** is connected directly to power source **5**. The refrigerator **3**, as the heaviest component, is used as the base with the microwave oven **2** stacked on top. In the selection of the refrigerator **3**, it would be advantageous in one embodiment for the height of the refrigerator to be no more than 48 inches above the floor. This provides a more ergonomic operation of the microwave oven **2** for the user. In addition, in the stacked position of the appliances in an embodiment, the doors **9** and **10** of the microwave **2** and refrigerator **3**, respectively, should be arranged in a common plane. The appliances may be of standard design with features commonly available. The internal components of the appliances are well known and do not need to be described herein.

[0027] Microprocessor **4** is the controller for the operation of the microwave oven **2** and is also adapted to control the other components of system **1**, as shown in FIG. **3**. Power is distributed throughout the system **1** under control of microwave controller **4** and digitally operated switches such as relays **19** and **20** of FIG. **3**. Power is distributed to each of the appliances **2** and **3**, and to auxiliary low power receptacles **11** and **12**. In use lamps **13** and **14** in the form of LED'S or the like may be connected to the auxiliary receptacles to indicate power being available or disabled. The low power auxiliary receptacles **11** and **12** are provided to permit convenient access for plugging in a low power device for example, rechargeable devices, such as cellular phones, PDA's, or other electronic devices that do not demand high power. As shown in the graph of FIG. **8**, there are instances during which, if more than one of the appliances is in use, the cumulative current would cause an overload condition.

[0028] Control panel **22** of microwave oven **2** may be adapted to provide a display of the particular status of the controlling relays, for example, LED's **13** and **14** may indicate that power to the outlets **11**, and **12** are disabled or available. In one embodiment the lamps will light when power is available at the outlet and flash when disabled. A button operated touch panel provides manual control.

[0029] As shown in FIG. **4**, in order to control the power to the microwave **2**, refrigerator **3** and receptacles **11** and **12**, sensing circuits, may be coupled to the controller to monitor current to the appliances and the auxiliary receptacles. A relay **20** is connected in the power line to the refrigerator and may be actuated by signals from controller **4**. In particular, according to an embodiment of this application, sensing circuits **16**, as shown in FIG. **4**, have sensors **17** and **18** coupled to the power line of the auxiliary outlets **11** and **12** to monitor the current being used by a connected device. Sensors **17** and **18** may be current sensing transformers of the type available from Triad Magnetics of Corona, Calif. The signals generated by sensors **17** and **18** may be used to activate switches or other control components, such as relays **19**. Relays **19** may be actuated by controller **4** to enable and disable power to the low power auxiliary outlets **11** and **12** in response to signals from sensors **17** and **18**. A maximum current may be set by controller **4** to prevent overload of the outlets **11** and **12**. In one embodiment of the system of this application, the maximum current limit is set at 2 amps.

[0030] In another embodiment, a clock device **21** could be used to provide timed delays during which, for example, refrigerator **3** would be prevented from undesirably rapid on/off cycles. When refrigerator **3** is disabled during microwave operation, a time delay of 3 minutes is provided during which refrigerator **3** will remain disabled, even if microwave use is only for a short period. Controller **4** may be programmed to manage the power to the components of the system to avoid overload conditions, while minimizing disruptions in the use of an individual appliance. A model of operative events and related control operations may be designed into the program executed by controller **4** to provide a control methodology as illustrated in FIGS. **5-7**.

[0031] In one embodiment, as illustrated in the block diagram of FIG. **3**, microprocessor controller **4**, constructed as part of the controller for microwave **2**, would be adapted to process the sensor signals and identify particular events in the system **1** related to a particular appliance. Microprocessor **4** would control the power to microwave **2** and refrigerator **3** and also low power receptacles **11** and **12** to avoid overload conditions. The microprocessor **4** could be programmed to execute the control methods illustrated and described below. In a preferred embodiment, the controller **4** is the control microprocessor for microwave oven **2** and is adapted to execute the control algorithms described below. Controller **4** is coupled directly to refrigerator outlet **15** and low power outlets **11** and **12**.

[0032] In one embodiment, shown in FIG. **1**, the outlets **11**, and **12**, are installed as part of the front control panel of microwave oven **2**. In FIG. **2**, in another embodiment, the

auxiliary receptacles **11** and **12** and refrigerator receptacle **15** are accessible at the rear of the microwave oven **2**. In these alternative embodiments, the microwave oven **2** is connected by supply cord **8** directly to power supply receptacle **5**. Refrigerator **3** is connected by power cord **7** to receptacle **15** in microwave oven **2** as shown in FIG. **2**.

[0033] In one embodiment, control models are established as shown in FIGS. **5-7** for execution by the controller **4**. These models can be in the form of algorithms stored in a computer readable medium, such as software or firmware within microprocessor **4**. The models shown are, in the first instance, dependent on the state of operation of microwave oven **2**. The current demands of the microwave **2** are generally the most significant contribution to overload, as shown in FIG. **8**. To avoid overload conditions, power to the low power receptacles **11** and **12** and refrigerator receptacle **15** is disabled during microwave operation. If the refrigerator **3** is under power when the microwave **2** is turned on, the power, to the refrigerator is turned off and clock **21** begins to count for a predetermined period during which the compressor of refrigerator **3** cannot be restarted. A time delay, for example, of 3 minutes, may be set and when this delay period is expired, receptacle **15** may again be enabled, providing microwave operation has ceased. This prevents a too rapid restart of the compressor that may otherwise result in damage.

[0034] In the embodiment shown in FIG. **5**, if low power is demanded at receptacle **11** or **12** and microwave oven **2** is not in use, power is supplied to the low power receptacles, providing further, that the current demand in an individual outlet does not exceed a preset limit, for example, 2 amps. Since the auxiliary outlets may be enabled during refrigerator operation, there may be an overload generated at peak compressor operation. In one embodiment the microwave controller acts to disable the auxiliary outlets during compressor startup to prevent accidental overload of the system. Therefore as illustrated in the flow diagram of FIG. **5**, controller may be adapted to check the operational status of the refrigerator, as well as the microwave oven, prior to enabling the auxiliary outlets.

[0035] FIGS. **9-11** illustrate another embodiment. In this embodiment the sensing components **117** and **118** are connected to reduce the risk of overload by the combined demands of the auxiliary outlets **111** and **112** and the refrigerator outlet **115**. In the configuration, as shown in FIG. **10**, current sensor **117** is connected to monitor the current in the refrigerator outlet **115** and is constructed to limit the refrigerator current component so that it does not exceed 10 amps. Current sensor **118** is connected to monitor the combined current in the auxiliary outlets **111** and **112**. Current sensor **118** is constructed to limit the combined auxiliary outlet current to 4 amps. In this manner the risk of overload is minimized. In the block diagram of FIG. **9**, the microwave **102** having controller **104** is connected to power supply **105**. Clock **121** provides a timing device to generate a restart delay for refrigerator **103**. Sensing circuit/sensor **117** is connected to monitor the current demanded by refrigerator **103** and sensing circuit/sensor **118** is connected to low power receptacles **111** and **112** to monitor the combined current in receptacle **111** and **112**.

[0036] In this embodiment, as shown in FIG. **11**, a control panel **122** is arranged with a keypad **123** for manual control and a display **124**. Auxiliary outlet **111** is shown as accessible from the front and is associated with a status LED indicator and reset button **113** that may be caused to be on during use and switch to a flashing mode when the microwave is running. Refrigerator outlet **115** is also shown to be accessible from the front panel and is associated with an LED indicator and reset button **114**. Similarly LED indicator **114** is controlled to be on during use of the refrigerator and to switch to a flashing mode when the microwave is operating.

[0037] A further embodiment of the processor operational model is shown in FIG. **6**. In this model, the refrigerator demands power. This may be triggered by a temperature drop in the refrigerator and involve start up of the refrigerator compressor with an associated peak power demand. If the microwave is on, the recycling of the refrigerator will be delayed. If the microwave was on and subsequently cycled off, the clock **21** must be checked to determine if the restart can occur. Under some circumstances, it may be necessary to give the refrigerator priority to prevent an undesirable drop in temperature. In the latter instance, microcontroller can be coupled to the refrigerator temperature sensor to execute a time sequence during which the microwave will be disabled to allow the refrigerator to return to proper operating temperatures.

[0038] In the embodiment of FIG. **7**, priority is given to the power demands of the microwave oven, as indicated above. Use of the receptacles **11**, **12**, and **15** are, therefore, disabled during microwave operation. The operational models, illustrated in FIGS. **5-7**, may be established by algorithms that are programmed or imbedded in controller **4**.

[0039] In this manner a system of linked appliances, including a microwave oven, refrigerator, and a low power appliance may all be connected through a common supply cord without the risk of inconvenient interruptions in use caused by overloads.

[0040] It should be understood that the above description is only illustrative of the invention. Various alternatives and modifications can be devised by those skilled in the art with out departing from the invention. Accordingly, the present invention is intended to embrace all such alternatives, modifications and variances which fall with the scope of the appended claims.

We claim:

1. A system of linked appliances comprising:

a microwave oven connected to a source of power and having a control processor for controlling the operation of the microwave oven;

a first power supply outlet provided on the microwave oven;

a refrigerator connected to the source of power by connection to the first power supply outlet;

a second power supply outlet connected to the source of power through the control processor, the second power supply outlet adapted to receive an appliance having low power requirements;

sensing components connected to sense current demanded at the second power supply outlet, and generating signals indicative thereof; and

wherein the control processor is configured to enable or disable power to the microwave oven, the first power supply outlet and the second power supply outlet, according to an algorithm in the control processor, and wherein the algorithm causes the control processor to:

disable the refrigerator and the second power supply outlet, when the microwave demands power; and

enable the second power supply outlet when the microwave is off.

2. The system according to claim **1** wherein the control processor further

disables the second power supply outlet when the sensing component signals indicate current in excess of a predetermined limit.

3. The system according to claim **2**, wherein the predetermined current limit is two amps.

4. The system according to claim **1**, wherein the control processor starts a clock when the refrigerator is disabled and prevents the subsequent enabling of the refrigerator before the expiration of a predetermined time limit.

5. The system according to claim **1**, wherein the second power supply outlet further comprises at least two auxiliary outlets to provide power to charge low power battery operated electronic devices and the sensing components are connected to sense the current demanded at each of the auxiliary outlets.

6. The system according to claim **4**, wherein the predetermined time period is three minutes.

7. The system according to claim **1**, wherein the sensing circuit further comprises a first current sensor connected to monitor the current in the first power supply outlet and a second current sensor to monitor the current in the second power supply outlet and wherein the control processor, in response to the first and second current sensors is configured to limit the combined current in the first and second supply outlets to a predetermined value.

8. The system according to claim **7** wherein the predetermined value is less than 15 amps.

9. The system according to claim **1**, wherein the second power supply outlet further comprises at least two auxiliary outlets to provide power to charge low power battery operated electronic devices; and wherein the sensing circuit further comprises a first current sensor connected to monitor the current in the first power supply outlet and a second current sensor to monitor the combined circuit current in the at least two auxiliary outlets and wherein the control processor, in response to the first and second current sensors is configured to limit the combined current in the first and second supply outlets to a predetermined value.

10. The system according to claim **9** wherein the predetermined value is less than 15 amps.

11. A processor readable medium having processor readable program code embodied therein for operating a control processor to control a system of multiple linked appliances having a microwave oven, a refrigerator, and a auxiliary power supply outlet, wherein the processor readable program code causes the control processor to:

disable the refrigerator and the auxiliary power supply outlet, when the microwave demands power; and

enable the auxiliary power supply outlet when the microwave is off.

12. The processor readable medium, according to claim **11** wherein the processor readable program code further causes the control processor to

disable the auxiliary power supply outlet when the sensing components indicate that current at the auxiliary power supply is in excess of a predetermined limit.

13. The processor readable medium, according to claim **11**, wherein the processor readable program code causes the control processor to start a clock when the refrigerator is disabled and further to prevent the subsequent enabling of the refrigerator before the expiration of a predetermined time limit.

* * * * *