UNITED STATES PATENT AND TRADEMARK OFFICE

_____

BEFORE THE PATENT TRIAL AND APPEAL BOARD

_____

COLLEGE PRODUCTS, INC
Petitioner,

v.

INTIRION CORPORATION
Patent Owner

_____

Post Grant Review PGR2024-00003,
PGR2024-____

Supplemental Declaration of
Mark N. Horenstein in Support of the

Petitions for *Post Grant* Review of:

U.S. Patent No. 11,674,745 and
U.S. Patent No. 11,674,746.

EXHIBITS CONSIDERED[1]

Exhibit No.	Description
1001 ('745 petition)	U.S. Patent No. 11,674,745
1001 ('746 petition)	U.S. Patent No. 11,674,746
1002	Original Expert Deceleration
1003 ('745 petition)	Prosecution File History, U.S. Patent No. 11,674,745.
1003 ('746 petition)	Prosecution File History, U.S. Patent No. 11,674,746.
1004	Original Intirion Complaint Filed on June 8, 2022.
1005	College Products Motion to Dismiss for Improper Venue filed on September 27, 2022.
1006	Order Transferring case to Iowa filed on April 10, 2023.
1007	Email Admitting that Petitioner has Compulsory Counter claims dated May 3, 2022.
1008	U.S. Application No. 14/262,290 ("the '290 Application"), published as U.S. Publication 2014/0251982.
1009 ('206 petition)	Exemplary embodiment Claim chart 9 sent by Intirion related to the 9,791,206 patent.
1009 ('374 petition)	Exemplary embodiment Claim chart 9 sent by Intirion related to the 10,495,374 patent.
1009 ('876 petition)	Exemplary embodiment Claim chart 1 sent by Intirion related to the 11,274,876 patent.
1010	Email where Patent Owner construes certain terms
1011	U.S. Application No. 12/317,632 ("the '632 Application") published as U.S Publication U.S. Pub. 2009/0188911 ("Emma")
1012	"ISDU: Integrated Smoke detector Unit for Commercial Microwave Ovens", Cory Lloyd *et. al*, Northeastern University (2007). ("ISDU")
1013	RESERVED
1014	U.S. Patent No. 4,496,817 to Smith ("Smith")
1015	U.S. Patent No. 8,446,048 to Butt ("Butt")

[1] These exhibits relate to this supplemental Declaration and are to be used as an addition to the exhibits previously considered in the Expert Declaration.

Exhibit No.	Description
1016	Redline Comparison between 290 and Emma
1017	Iowa DJ Complaint
1018	Consolidation Order
1019	Summons return of service, dated June 8, 2023
1020	U.S. Application No. 13/094,747 ("the '747 Application") published as U.S Publication U.S. Pub. 2012/0276763A1 ("Quezada")

APPENDICES CONSIDERED

Appendix No.	Description
F	C.V of Dr. Mark N. Horenstein
G	Battery Charging Specification, Revision 1.1, April 15, 2009, USB Implementers Forum, Inc.
H	"Apple Introduces the New iPod," Press Release, July 19, 2004

SUPPLEMENTAL DECLARATION OF DR. MARK N. HORENSTEIN

I, Dr. Mark N. Horenstein, declare as follows:

[1]. I am over the age of 18 years and am fully competent to make this Supplemental Declaration. I make the following statements based on personal knowledge and, if called to testify to them, could and would do so. This document, which addresses U.S. Patents 11,674,745 and 11,674,746 ('745 and '746 patents, respectively; together the "Challenged Patents") is to be used as a supplement to my Original Declaration attached as Exhibit 1002 ("Original Declaration" or Ex.1002), which is hereby incorporated by reference in its entirety. Because of the similarities between the '745 and '746 patents to the '206, '374, and '876 patents addressed in my Original Declaration,[2] I herein address only those issues that can be aided by further clarification or by providing further context related to variations in the claim terms. Such variations, however, do not materially alter my substantive opinion or conclusions and, unless explicitly contradicted in this Supplemental Declaration, I stand by the statements I made in my Original Declaration and continue to hold my opinions as provided in my Original Declaration. Those opinions are applicable to similar elements of the '745

[2] U.S. Patent Nos. 9,791,206; 10,495,374; and 11,274,876

and ’746 patents.

I. INTRODUCTION

[2]. I have been retained on behalf of College Products, Inc. (“Petitioner”).

[3]. I have been asked to study and provide my opinions concerning: U.S. Patent No. 11,674,745 and the patentability of its claims 1, 12-15, 19-20, 22-25 and 26 (the “’745 Challenged Claims”); U.S. Patent No. 11,674,746 and the patentability of its claims 1-24 (the “’746 Challenged Claims”; collectively the “Challenged Claims”). The opinions I offer herein are reached in view of certain prior-art references, the state of the art at the time of the claimed inventions, and the knowledge that a person of ordinary skill in the art would have had at the time of the claimed inventions.

[4]. My opinions and views set forth in this Supplemental Declaration are based on my education, training, and experience in the field of electrical engineering, sensors, and related technical areas, as well as Petitioner’s Exhibits 1001-1022, and other materials that are cited and discussed herein.

A. Prior Art

[5]. As was the case with my Original Expert Declaration, I have again been instructed to assume in my analysis the effective filing date for each of the Challenged Claims (“Effective Filing Date”) is April 25, 2014. (Ex. 1002)

and that this date is to be used for the purpose of determining what qualifies as "prior art". In other words, I may consider as "prior art" any patents or publications that were publicly available prior to the Effective Filing Date, as well as any patent applications filed in the United States before the invention. I further understand that for the purposes of this proceeding before the United States Patent Trial and Appeal Board, only patents and other documents that have the legal status of a "printed publication" may be relied upon as prior art.

B. Person of Ordinary Skill in the Art

[6]. My understanding of a POSITA was discussed in my Original Expert Declaration and is fully incorporated herein. Ex. 1002 ¶¶[38-42].

C. Claim Construction

[7]. My understanding of Claim Construction was fully discussed in my Original Expert Declaration and is fully incorporated herein. Ex. 1002¶¶[43-47].

II. TECHNICAL DISCUSSION OF THE FIELD AND LEVEL OF ORDINARY SKILL IN THE ART

A. Field of the Challenged Patents

[8]. My opinions regarding the field discussed in my Original Declaration are equally applicable to the Challenged Patents and are fully incorporated herein. Ex. 1002¶[48].

B. Level of Ordinary Skill in the Art

[9]. I have been asked to provide my opinions regarding the knowledge and understanding that a hypothetical person of ordinary skill in the art (POSITA) would have had as of the Effective Filing Date of the Challenged Patents (i.e., April 25, 2014). As discussed below, it is my understanding that each of the Challenged Claims is entitled to an effective filing date no earlier than April 25, 2014. Accordingly, the analysis set forth herein is based on the timeframe of the alleged invention as of April 25, 2014.

[10]. My opinions regarding the knowledge and understanding of a hypothetical POSITA were fully discussed in my Original Expert Declaration and are fully incorporated herein. Ex. 1002 ¶¶[49-52].

III. THE CHALLENGED PATENTS

[11]. The technology of the Challenged Patents relates to microwave-oven/refrigerator combinations having a smoke sensor and control functions, plus power-supply outputs that are coordinated by a control circuit.

A. Effective Filing Date for Each of the Challenged Patents is No Earlier than April 25, 2014

[12]. Each of the Challenged Patents claims priority as a continuation-in-part ("CIP") application (either directly or indirectly) to U.S. Application No. 14/262,290 ("the '290 Application") which was filed on April 25, 2014 and published as U.S. Pub. 2014/0251982. Ex. 1008. The '290 Application claims priority as a CIP to U.S. Application No. 12/317,632 ("the '632

Application") which was filed on December 23, 2008 and published as U.S. Pub. 2009/0188911 ("Emma"). Ex. 1011.

[13]. The Challenged Claims generally contain the following basic elements: Microwave Oven, Control Circuit, and a Smoke Sensor, configured to (*i*) provide a Shutdown Function to the Microwave Oven based on the output of the Smoke Sensor, and (*ii*) provide a Reset Enable Function such that the Microwave Oven may be turned back on.[3] Although there are some variations in the Challenged Claims amongst the Challenged Patents, each of the Challenged Claims requires an implementation of a smoke sensor to shut down a microwave oven. For the same reasons discussed in my Original Declaration, it is thus my understanding that the earliest possible priority date for the Challenged Claims is the filing date of the '290 Application, namely April 25, 2014.

[14]. For purposes of this Declaration, I thus assume that April 25, 2014 is the earliest priority date of the Challenged Patents. However, I offer no opinion as to whether the Challenged Claims are actually entitled to that priority date or are enabled by the '290 Application.

---

[3] These elements are described in detail later in this Supplemental Declaration. Capitalized terms are defined below in Section III.D.1 with respect to the '745 Patent and with each respective sub-heading under Section VII.A with respect to the '746 Patent.

B. **Technology Background**

[15]. The technology background provided in my Original Declaration is equally applicable to the Challenged Patents and is incorporated into this section. Ex. 1012 ¶¶[57-63]. I provide below additional technology background regarding the USB ports disclosed in various claims of the Challenged Patents.

[16]. The Universal Serial Bus, or "USB," is both a wiring standard and a communication protocol. The standard USB connection between a host device and a peripheral consists of four wires ending in terminals at either end of a USB cable. The diagram below shows the pin diagram as outlined in the USB 2.0 and later specifications. The connector on the left is a well-known Type-A, while the connector on the right is a "Micro-USB" Type B. Other types of connectors exist today (e.g., the now-ubiquitous Type C), but in the time frame of the Challenged Patents, the Type A and Micro Type-B were the most common:

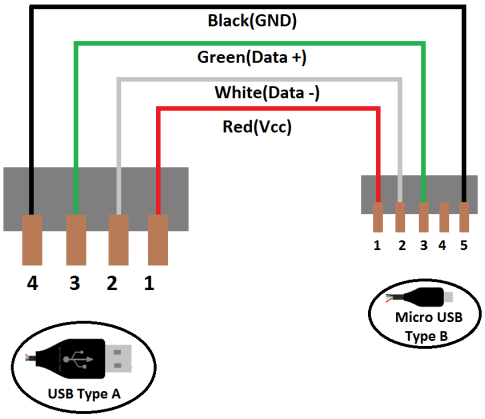

USB Connection Diagram

[17]. As the wiring diagram above shows, the two outermost of four wires (black and red) are used to convey DC power from one end of the cable to the other. Specifically, the red wire is the "VCC," or positive voltage connection, and the black wire is the ground, or "negative" voltage connection.

[18]. The inner two wires (green and white) are used to transmit data over the cable using a USB serial bit-communication protocol. However, in the Challenged Claims, the USB connection is used only for conveying DC power, and not for data transfer. (See, for example, '745 claim 12, 14: "…wherein the USB port is in operative connection with the at least one power control circuit, wherein the USB port is not operative to deliver electrical power from the USB port…" and '746 claims 4 and 8: "…wherein the at least one power control circuit is operative to cause electrical power to be unavailable to the USB port…"; and Claim 19: "…power control circuit is operative to cause electrical power to not be deliverable from each of the

electric socket and the USB port…" The words "data" or "communication" are not found in any of the Challenged Claims. (As I discuss later, none of the Challenged Claims include the communication function of USB.)

C. The Specifications of The Challenged Patents

[19]. In my Original Declaration, I provided discussions of the '206, '374, and '876 patent specifications. Ex. 1002 ¶¶[64-92]. These discussions are equally applicable to the Challenged Patents and are incorporated into this section. I also note that the '745 Patent adds USB port(s) as an alternative to the auxiliary ports 11 and 12 disclosed in Emma. "As shown in FIGS. 15, 16 and 27, the exemplary front control panel 22 of the microwave oven 2 may include Universal Serial Bus (USB) ports 232, 234 for connection, communication, and power supply between the front control panel 22 and electronic devices such as a personal computer, cell phone, Smart Phone, Ipod®, Ipad®, or other suitable device to allow communication and/or charging of the electronic device plugged into the USB ports." '746 Patent, 20:3-10.

D. The '745 Patent

1. <u>The Challenged Claims of the '745 Patent</u>

[20]. The '745 Patent has 28 claims, with claims 1, 15, and 24 being independent (the "Independent Claims"). Ex. 1001 at claims 1-28. All Independent Claims are part of the Challenged Claims. Dependent claims 12-

14, 19-20 and 22, 23, 25 and 26 are also part of the Challenged Claims (the "'745 Dependent Claims"). In following section, I present my opinions regarding relevant claim terms of the '745 patents. For clarity, I will add the prefixes "745" or "746" to similarly named claim terms found in the indicated patents if needed to distinguish between the '745 and '746 patents. However, for simplicity, these prefix labels will be omitted when referring to a single patent.

[21]. As discussed above, the '745 Independent Claims generally contain the basic elements of a Microwave Oven, a Control Circuit, Withhold and Deliver Electrical Power to components of the device, a Smoke Sensor, where the Smoke Sensor is configured to supply a Shutdown Function to the Microwave Oven upon the detection of smoke and is configured to provide a Reset Enable Function so that the Microwave Oven may be returned to a state where it can further deliver cooking power. '745 petition Ex. 1001 ('745 patent). Independent claims 1 and 15 and dependent claim 25 also include a Refrigerator.

[22]. Claim 1 is representative of the '745 Independent Claims.

> **"'745 Microwave Oven" or** "**Microwave Oven**": an appliance including a microwave oven,
>
> **"'745 Control Circuit or** "**Control Circuit**": at least one power control circuit, wherein the at least one power control circuit is in operative electrical connection with the microwave

oven and the refrigerator, a single power cord, wherein the single power cord is configured to be releasably connected to a source of electrical power, wherein the at least one power control circuit is supplied with electrical power only through the single power cord,

"'745 Refrigerator or "Refrigerator": a refrigerator,

"'745 Shutdown Function" or "Shutdown Function": wherein responsive at least in part to a level of smoke sensed by the smoke sensor, the at least one power control circuit is operative to cause cooking power to the magnetron to be withdrawn to end a current cooking session prior to a set end time of the current cooking session,

"'745 Withhold and Deliver Electrical Power" or "Withhold and Deliver Electrical Power": wherein the at least one power control circuit is operative to cause electrical power to be withheld from at least one component of the refrigerator when a magnetron of the microwave oven draws cooking power, and electrical power to be delivered to the refrigerator when the magnetron does not draw cooking power,

"'745 Smoke Sensor" or "Smoke Sensor": wherein the microwave oven includes a smoke sensor, wherein the smoke sensor is positioned in operative connection with a cooking area inside the microwave oven, is in operative connection with the at least one power control circuit,

"'745 Reset Enable Function" or "Reset Enable Function": wherein after the current cooking session has been caused to end prior to the set end time based on the sensed level of smoke, the at least one power control circuit is operative thereafter to enable the magnetron to receive cooking power in a next subsequent cooking session.

Ex. 1001 ('745 patent) at claim 1.

[23]. All the '745 Independent Claims respectively contain these same

structural limitations (except claim 24, which does not include a Refrigerator), although they may be worded slightly differently or contain additional limitations. These distinctions do not substantively change my conclusions regarding the invalidity of the claims. However, where clarification is useful, such distinctions will be discussed further below.

[24]. Claims 12, 13, 14, 19, 20, 22, 23 and 26 make up the dependent claims of the Challenged Claims (the "'745 Dependent Claims"). I will address the dependent claims in three separate groupings: the USB Port Claims; the Auxiliary Output Device Claims; and the Sensor Claim.

[25]. The **"'745 USB Port" or "USB Port"** Claims (claims 12, 14, 19, 23, and 26) add the basic elements of a USB port in operative connection with at least one power control circuit. Claim 26 is representative of commonalities and recites: "wherein the microwave oven further includes at least one USB port, wherein the at least one USB port is in operative connection with the at least one power control circuit..." Ex. 1001 ('745 patent) at Claim 26.

[26]. Other USB Port Claims add other limitations, for example: "wherein the USB port is operative to deliver electrical power" (Ex. 1001 at claims 14 and 23); "wherein the USB port is not operative to deliver electrical power from the USB port when the magnetron draws cooking power…" (Ex. 1001 at

claims 12 and 19).

[27]. I note that, while the specification mentions the communications aspect of a USB port, e.g.:

> …the exemplary front control panel 22 of the microwave oven 2 may include Universal Serial Bus (USB) ports 232, 234 for connection, **communication**, and power supply between the front control panel 22 and electronic devices… to allow communication and/or charging of the electronic device plugged into the USB ports.
>
> ('745 Patent, 20:8-15).

[28]. However, the instances of "USB" in the claims related only to the power-supply function of USB ports.

[29]. With respect to Auxiliary Output Device claims (claims 13 and 20), claim 13 is representative:

> **"'745 Auxiliary Output Device" or "Auxiliary Output Device"**:
>
> wherein the microwave oven further includes at least one output device including at least one of
> a USB port,
> an inductance charging pad,
> an auxiliary electrical outlet,
> wherein the at least one output device is in operative connection with the at least one power control circuit, and wherein the at least one power control circuit is operative to cause the at least one output device to be inoperative when the magnetron draws cooking power.

[30]. The Sensor Claim (claim 22) recites:

"'745 Sensor" or "Sensor":

wherein the smoke sensor includes at least one of
a radiation emitter and radiation receiver,
a photosensor,
a motion sensor,
an ionization sensor, and
a VOC sensor.

[31]. While there are some variations between claims within the '745 Dependent Claim groupings, these distinctions do not substantively change my conclusions regarding the invalidity of the claims. Where clarification is useful, however, such distinctions are discussed further below.

2. The Prosecution History of the '745 Patent

[32]. The application for the '745 Patent was filed on February 8, 2022. '745 petition Ex. 1003 ('745 prosecution history). It included 28 claims. *Id*. On January 17, 2023, the Examiner issued an Ex Parte Quayle Action,[4] raising issue only with a typographical error with respect to the Challenged Claims; the Examiner issued a notice of allowability on April 12, 2023 after resolution. *Id.*

E. **The '746 Patent**

1. The Challenged Claims of the '746 Patent

[4] A Quayle Action is issued when there are minor issues to be resolved in a patent application that is otherwise suitable for allowance. Prosecution on the merits is closed.

[33]. The ’746 Patent has 24 claims, with claims 1, 15, and 22 being independent (the “’746 Independent Claims”) and claims 2-14, 16-21 and 23 being dependent (the “’746 Dependent Claims”). All of the ’746 Independent Claims and ’746 Dependent Claims are challenged claims, (collectively the “’746 Challenged Claims”)

[34]. All the ’746 Claims, respectively, contain similar structural limitations and are grouped appropriately together below under relevant subheadings in section VI.A.1-VI.A.9, although they may be worded slightly differently or contain additional limitations. These distinctions do not substantively change my conclusions regarding the invalidity of the claims. Where clarification is useful, however, such distinctions are discussed further below.

1. <u>The Prosecution History of the ’746 Patent</u>

[35]. The application for the ’746 Patent was filed on March 10, 2022. ’746 petition Ex. 1003 (’746 prosecution history). It included 24 claims after two preliminary amendments. *Id.* The Examiner issued an *Ex Parte* Quayle Action on January 17 2023, raising an objection to the drawings. Following a response by the applicant, the Examiner issued the initial notice of allowability on April 14, 2023, with a corrected notice issued May 8, 2023 to enter an examiners amendment. *Id.*

IV. STATE OF THE ART

[36]. I understand that Petitioner has asserted:

- U.S. Publication No. 2009/0188911A1 to Emma ("Emma") Ex. 1011.
- C. Lloyd *et al*, "ISDU: Integrated Smoke Detector Unit for Commercial Microwave Ovens", Electrical and Computer Engineering Undergraduate Capstone Projects, Paper 7, Northeastern University, April 17, 2007. ("ISDU") Ex. 1012
- U.S. Patent No. 4,496,817 to Smith ("Smith") Ex. 1014;
- U.S. Patent No. 8,446,048 to Butt ("Butt") Ex. 1015; and
- U.S. Application No. 13/094,747 ("the '747 Application") published as U.S Publication U.S. Pub. 2012/0276763A1 ("Quezada") Ex. 1020.

[37]. As I previously stated in my Original Expert Declaration, I understand that in order for a reference to be considered when determining the obviousness of a claimed invention, the reference must be "analogous" prior art. That is, the reference must be: (a) from the same field of endeavor as the claimed invention; or (b) reasonably pertinent to the problem faced by the inventor (even if it is not in the same field of endeavor as the claimed invention). Ex. 1002 ¶[94].

[38]. As I previously stated in my Original Expert Declaration, each of the references above is from same field of endeavor; that is, each pertains to

the field of electrical cooking appliances and/or relates to powering electrical appliances. Ex. 1002 ¶[95]. Thus, in my opinion, each qualifies as analogous prior art. Additionally, it is my opinion that each of these references is reasonably pertinent to the problems faced by the inventor, specifically: preventing fires by shutting down a microwave oven upon detection of an unwanted condition in the appliance; preventing the overloading of electrical circuits and establishing the electrical connections to do so. This is because each reference relates to improvements in appliances, such as the addition of a smoke or gas sensor to an electrical cooking appliance and the use of such a sensor to shut down the appliance as a means to prevent overcooking and/or prevent a fire from accelerating (e.g., ISDU, Smith, and Butt), or relates to using logic circuitry in a microwave-refrigerator combination to shut off power to the refrigerator and/or auxiliary electrical outlets when the microwave is in use (e.g., Emma). Quezada is also analogous art because it is reasonably pertinent to the problem faced by the inventor. Specifically, the '746 Patent teaches adding USB ports to a microwave having auxiliary electrical outlets to charge small electronic devices. Quezada also addresses charging small electronic devices by integrating USB ports into electrical outlets.

A. Summary of the Prior-Art References in the Supplemental Declaration

[39]. My Original Declaration provided a summary of Emma, ISDU, Smith and Butt at ¶¶[96-115]. These summaries are incorporated by reference into this section. The additional reference (Quezada) is summarized below.

1. Quezada

[40]. U.S. Patent Pub. No. 2012/0276763 ("Quezada") (Ex. 1020), entitled "Wall Mountable Universal Serial Bus and Alternating Current Power Sourcing Receptacle," was published on November 1, 2012. Ex. 1020, (12), (43), (54). Quezada is prior art pursuant to at least 35 U.S.C. §102(a)(1).

[41]. Quezada teaches combining a USB port with a standard alternating current (AC) power outlet to conveniently provide a direct current (DC) power source via a USB connector alongside the standard outlet. Ex. 1020 ¶[57]. The embodiment in Quezada Fig. 2 (see below) shows a power sourcing receptacle 100 that includes both a 120-V AC electrical receptacle 102 (red), and a USB receptacle 104 (blue). *Id.*, ¶[0023],

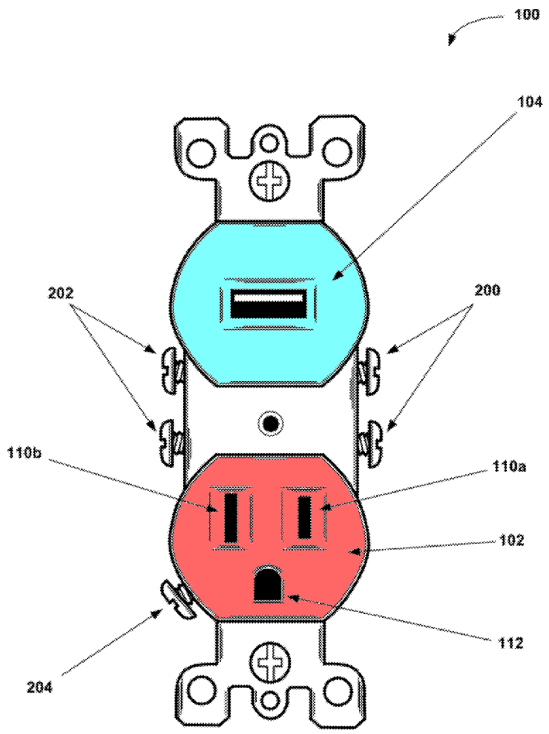

FIG. 2

Id., Fig. 2 (annotated).

[42]. "The USB receptacle 104 provides 100-150 milliamps (mA) and 5 volts direct current (DC) to devices inserted into USB receptacle 104." Ex. 1020, ¶[0025]. Thus, the USB receptacle 104 can provide DC power to computer peripherals, digital cameras, printers, personal media players, flash drives, "and other devices capable of accepting power or charge via a USB connector." *Id*.

[43]. Figure 6 from Quezada, replicated below, is a block diagram showing the flow of power to the USB port 104 and AC receptacle 102. Ex.1020, ¶[0039]. The "main power source" supplies power directly to 120-

V AC receptacle 102 (red) and directly to the USB regulated voltage sourcing unit ("RVSU") 600 (yellow). *Id.*, Ex. 1020, ¶[0039]- [0040]. The RVSU in turn provides 5-V DC power to the USB receptacle (i.e., "port", blue) 104a.

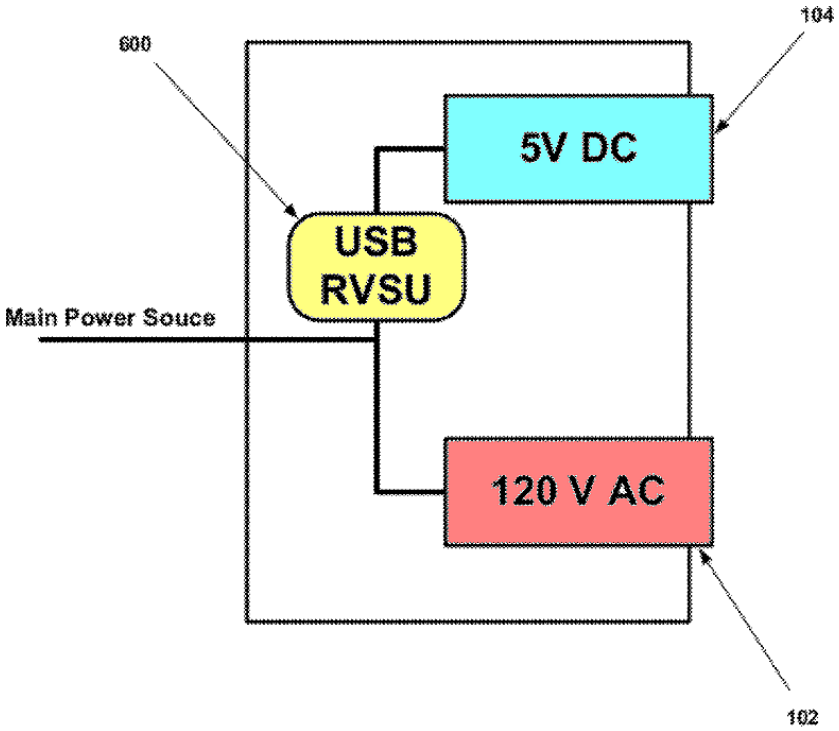

FIG. 6

Ex. 1020, Fig. 6 (annotated).

[44]. As shown below in Quezada Fig. 7, the USB RSVU 600 includes a transformer 700 (red) that steps down the incoming source voltage from the 120-V AC main power supply to 5-V AC; rectifier 702 (green) converts the latter voltage from alternating to a "pulsating DC voltage". Filter 704 (purple) then smooths the rectified voltage into a DC voltage. Voltage regulator 706 (blue) then produces and maintains the precisely regulated 5-V DC sent to the USB port. Ex. 1020, Fig. 7, ¶[0041]. As such, the USB RVSU 600 provides a

5-volt regulated voltage to USB port 104. *Id*.

[45].

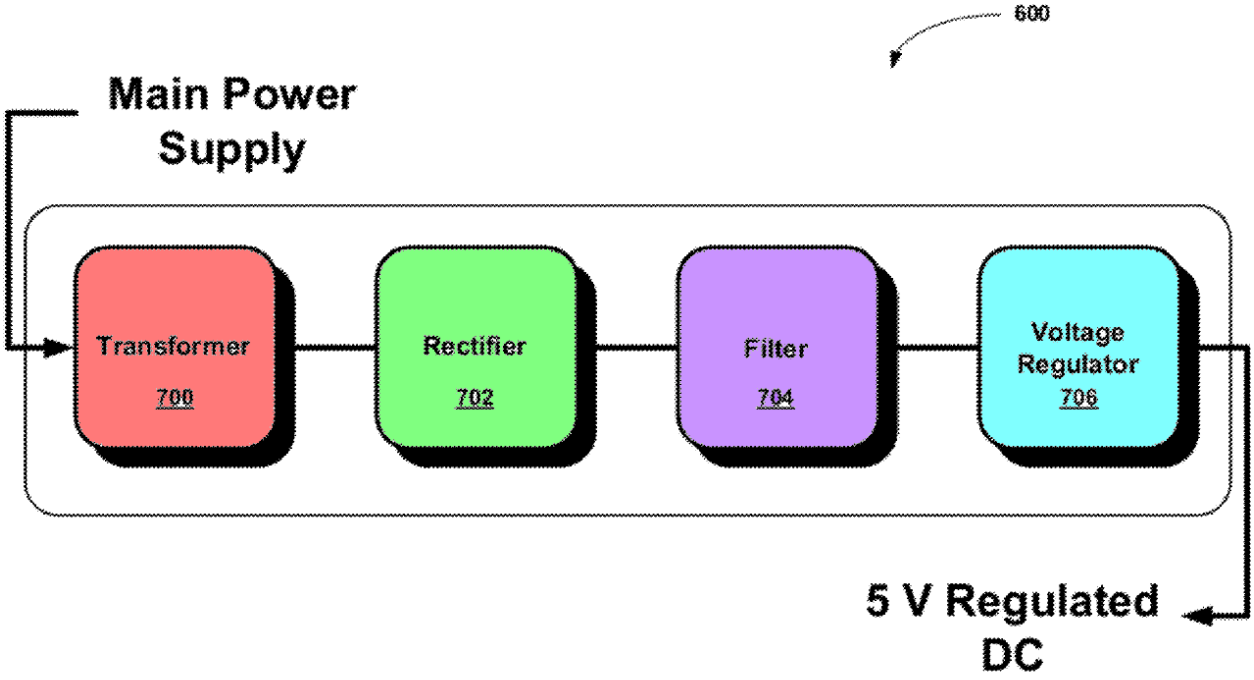

FIG. 7

Ex. 1020, Fig. 7 (annotated).

[46]. The configuration of Fig. 7 shows the various stages of Quezada's AC to DC converter (e.g., 120-V AC line input to regulated 5-V DC). This textbook arrangement was well known long before the time frames both of Quezada and the Challenged Patents. As an aid to understanding Quezada Fig. 7 and the way the AC input is converted to 5-V DC, I provide below illustrations of the various voltage waveforms coming out of each of the stages in the cascade. (These waveforms are not explicitly disclosed in

Quezada, but a POSITA would have been very familiar with them.) Each of the waveforms below corresponds to one of the boxes in Quezada Fig. 7 and is labeled with the same number and coloring. The input from the Main Power Supply is a sinusoidal voltage, and the 5-V Regulated DC output (blue) is constant with time:

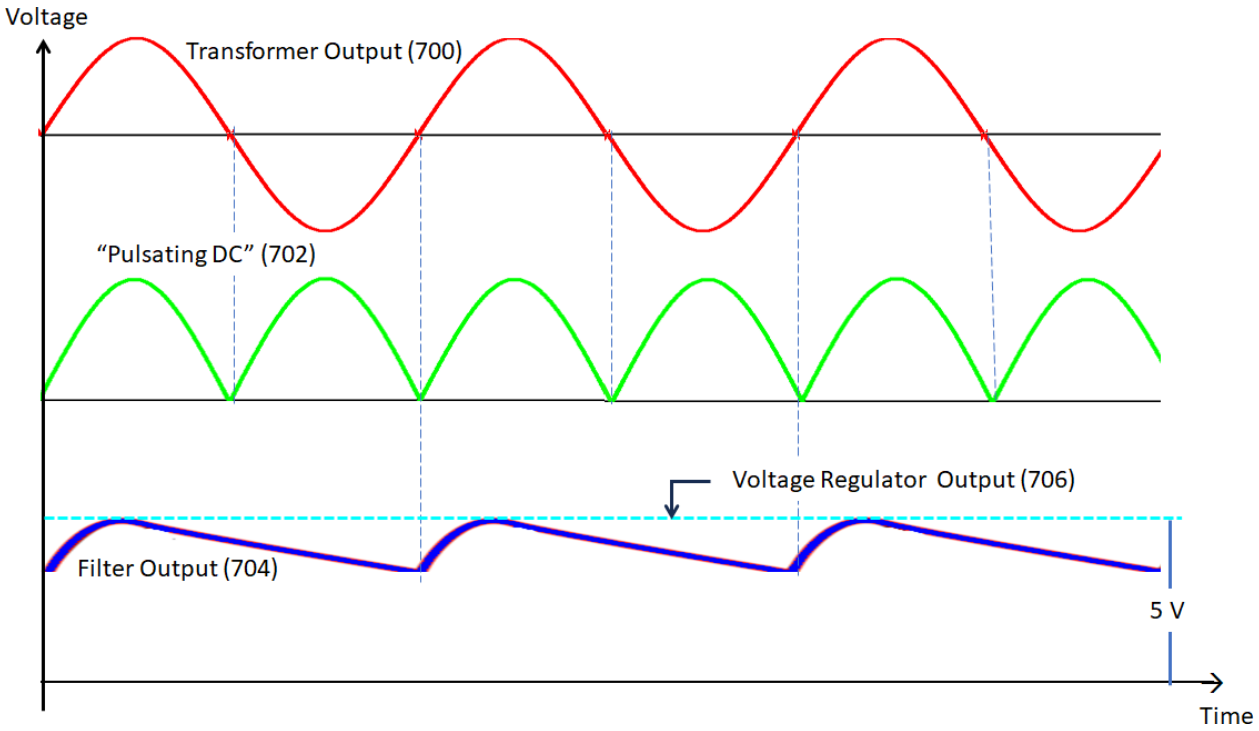

V. OPINIONS ON CLAIM CONSTRUCTION FOR THE '745 AND '746 PATENTS

[47]. I have been informed that the United States Patent and Trademark Office ("USPTO") and the Patent Trial and Appeal Board ("PTAB") only construe claims when it is necessary to resolve an underlying controversy between a petitioner and the patent owner. Given the disclosure of the prior-art references asserted by Petitioner, it is my opinion that none of the claim

terms in the Challenged Claims require construction to resolve the patentability determinations presented in the Petition. I reserve the right to provide opinions regarding any terms proposed for construction by the Patent Owner.

[48]. As discussed in my Original Expert Declaration, however, I have reviewed infringement contentions and correspondence provided to Petitioner from Patent Owner. [*See,* generally, '206 petition Ex. 1009 (Claim 9 Infringement Chart), '374 petition Ex. 1009 (Claim 9 Infringement Chart) and '876 petition Ex. 1009 (Claim 1 Infringement Chart). These demonstrate Patent Owner's interpretation of certain claim limitations, as discussed below. Ex. 1002 ¶¶[116-126].

A. The '745 and '746 Patents

[49]. I do not believe any claim term requires a construction to find the '745 Challenged Claims and '746 Challenged Claims invalid for the reasons provided in the Petitions. However, as explained below, I have applied Patent Owner's interpretations of one claim term to avoid unnecessary arguments regarding claim construction. I find the Challenged Claims to be invalid even using Patent Owner's constructions.

1. "Level/amount"

[50]. Claims 1 and 24 or the '745 Patent recite: "responsive at least in part

to a level of smoke sensed by the smoke sensor..." Ex. 1001 ('745 petition) at claims 1, 24. Claim 15 recites: "responsive at least in part to the smoke sensor sensing an amount of smoke…" Ex. 1001 ('745 petition) at claim 15. Claims 1, 10, 15, and 22 each recite a "level of smoke." Ex. 1001 ('746 petition) at claims 1, 15, 10, and 22. Based on its contentions in the Iowa Transfer Case on related patents, Patent Owner interprets "level of smoke" and "amount of smoke" to mean the mere detection of smoke. *See* Claim chart on '876 Ex. 1009 at 6. My opinions in this Declaration do not conflict with this interpretation, hence I have also applied what I understand to be Patent Owner's proposed construal of these terms in this declaration. As explained below, however, it is still my opinion that the claims are invalid even if the Board adopts Patent Owner's proposed construction. In either case, I reserve the right to provide opinions regarding any terms proposed by Patent Owner for construction.

VI. OPINIONS ON INVALIDITY OF THE '745 PATENT

A. The prior-art references teach all the elements of the '745 Challenged Claims

[51]. In my opinion, all of the features and elements of the '745 Challenged Claims were well known in the art as of the Effective Filing Date of April 25, 2014. In performing my analysis, I have considered and cited new references that are prior art to the '745 patent. In this declaration, I offer

my further opinions as a supplement to my Original Expert Declaration. The ’745 Challenged Claims contain many of the same or similar limitations as those described in my Original Declaration with respect to the ’206, ’374 and ’876 Patents. Accordingly, references are made to my Original Declaration, and additional opinions are provided to the extent that there are differences, or where clarification or context is beneficial.

1. The ’745 Independent Claims (Claims 1, 15 and 24) and Dependent Claim 25

a. ***“Microwave oven”***

[52]. Claim 1 of the ’745 patent recites “a microwave oven.” Claim 15 recites “a microwave oven,… wherein the microwave oven includes an interior cooking area.” Claim 24 recites “a microwave oven, including a magnetron and an externally accessible electrical connector, wherein the electrical connector is connectable to a plug.”

[53]. The teaching of most of these elements are explicitly described in my Original Declaration (see at least Ex. 1002 ¶¶[284-85][5]) and are incorporated by reference into this section. To the extent there are differences between the ’745 Microwave Oven and the ’876 Microwave Oven, for

[5] References to my Original Declaration may further cross reference other sections of my Original Declaration, in which case, those cross references are also incorporated by reference.

example the recitation of: "including a magnetron and an externally accessible electrical connector, wherein the electrical connector is connectable to a plug" in claim 24, the following teachings of the prior art, as applied to those differences, are further discussed below.

i. *Emma*

[54]. The Emma microwave includes a refrigerator receptacle 15 at the rear of the microwave which is connectable to a plug 7. Ex. 1011 ¶¶[0026, 0032]. The "refrigerator receptacle 15 [is] accessible at the rear of the microwave oven" and "Refrigerator 3 is connected by power cord 7 to receptacle 15 in microwave oven 2 as shown in FIG. 2." *Id*. at ¶[0032].

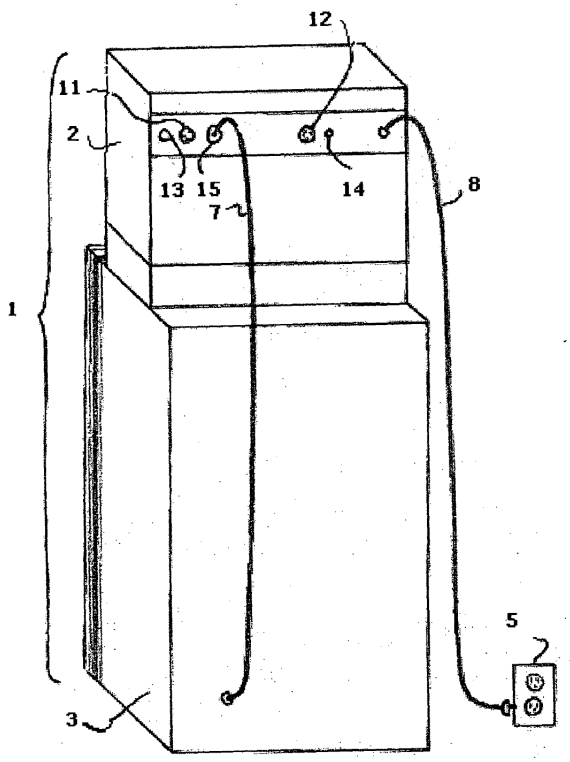

FIGURE 2

Id. at Fig. 2.

[55]. As shown in the block diagram of Figure 4 (reproduced below), externally accessible refrigerator receptable 15 [pink] is connected through relay 20 (orange) to power receptacle 5 (pink). *Id*. at Fig. 4.

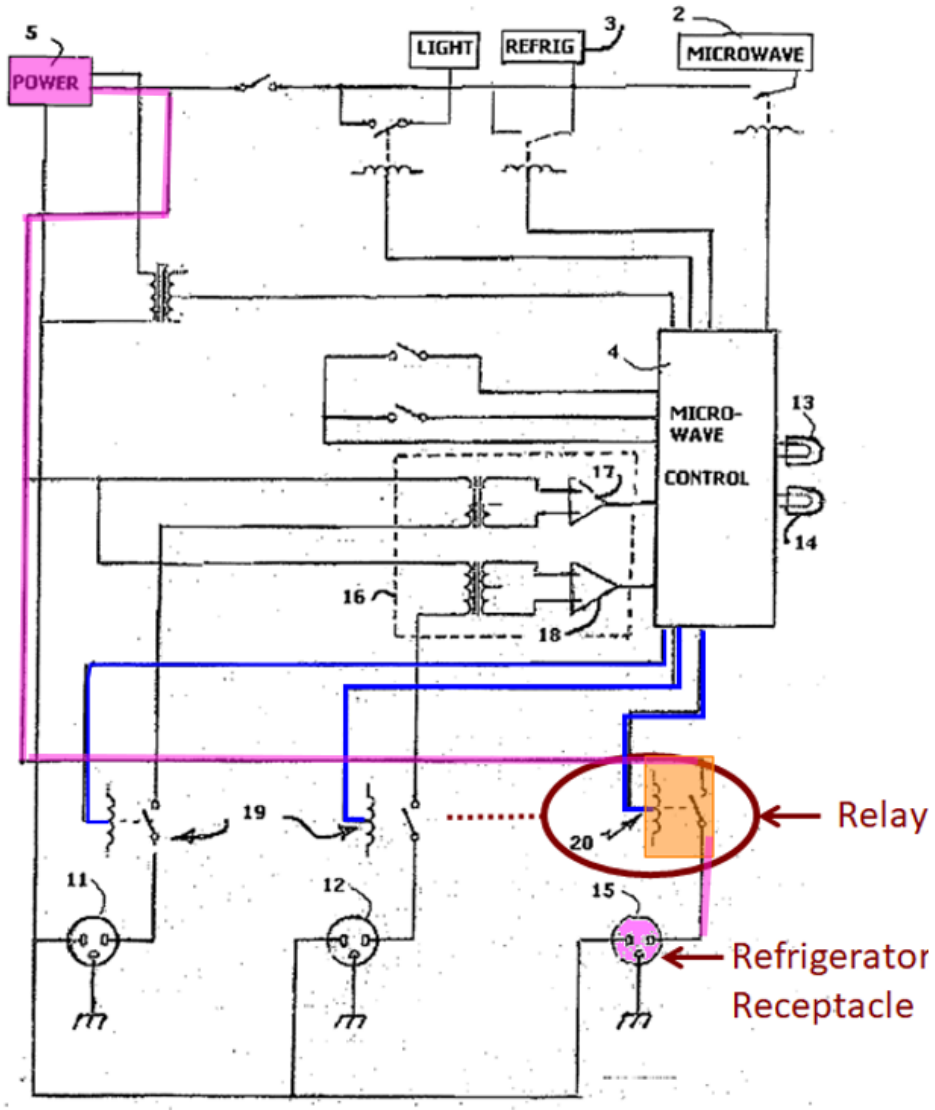

FIGURE 4

Id. at Fig. 4 (annotated).

[56]. Additionally, Emma states as follows: "The appliances (microwave and refrigerator) may be of standard design with features commonly available. The internal components of the appliances are well known and do not need to be described herein." *Id*. The microwave also includes a magnetron (blue box below). Ex. 1011 ¶¶[0008, 0010, 0011], Fig. 10.

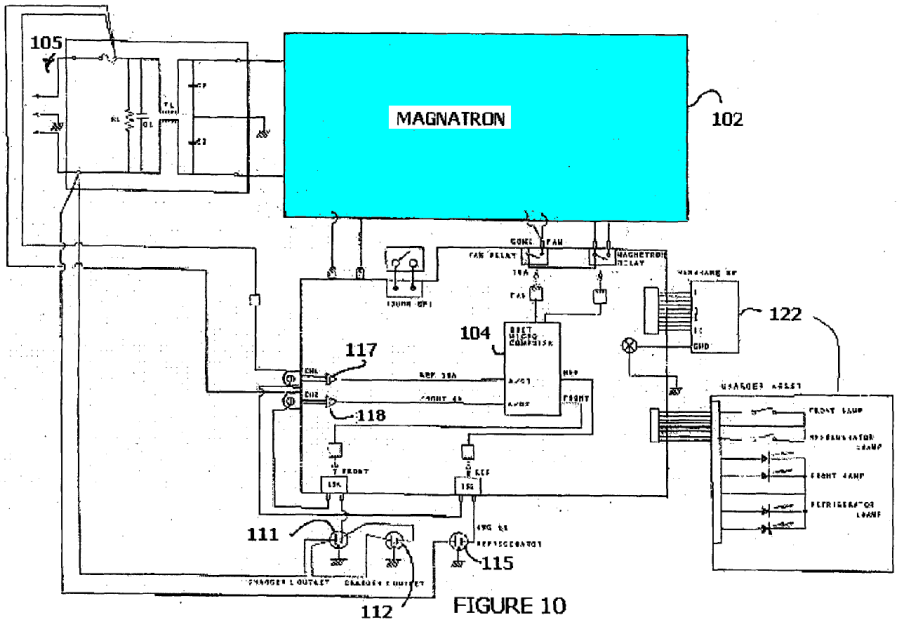

FIGURE 10

Id. at Fig. 10 (annotated).

b. ***"Refrigerator"***

[57]. Claim 1 recites "a refrigerator." Claim 15 recites "a refrigerator, wherein the refrigerator is configured to be in operative electrical connection with the at least one electrical power control circuit, wherein the refrigerator includes a plurality of electrically powered refrigerator components."

Dependent claim 25 recites "a refrigerator, wherein the refrigerator includes the plug, wherein the plug is connected to the electrical connector."

[58]. The teachings of most of these elements are explicitly described in my Original Declaration in at least ¶¶[286-87] and are incorporated by reference into this section. To the extent there are differences between the '745 Refrigerator and the '876 Refrigerator, for example the recitation of "wherein the refrigerator includes the plug, wherein the plug is connected to the electrical connector" in '745 claim 25, the following teaching of the prior art, as applied to those differences, is further discussed here.

i. *Emma*

[59]. Emma discloses a refrigerator connected to the refrigerator receptacle, where the disclosed receptacle is an externally-accessible electrical connector on the microwave oven and is in operative electrical connection with a control circuit (i.e., "at least one electrical power control circuit"). As Emma states: "a microwave oven…having a control processor for controlling the operation of the microwave oven; a first power supply outlet provided on the microwave oven; a refrigerator connected to the source of power by connection to the first power supply outlet...." Ex. 1011 at claim 1. As shown below in Emma Fig. 2, and as discussed by Emma, the "[r]efrigerator 3 is connected to microwave oven 2 by power cord 7 [green] t*o refrigerator*

receptacle 15 [blue arrow]*, shown at the rear of the microwave 2* in FIG. 2." *Id.* at ¶[0026] (emphasis added).

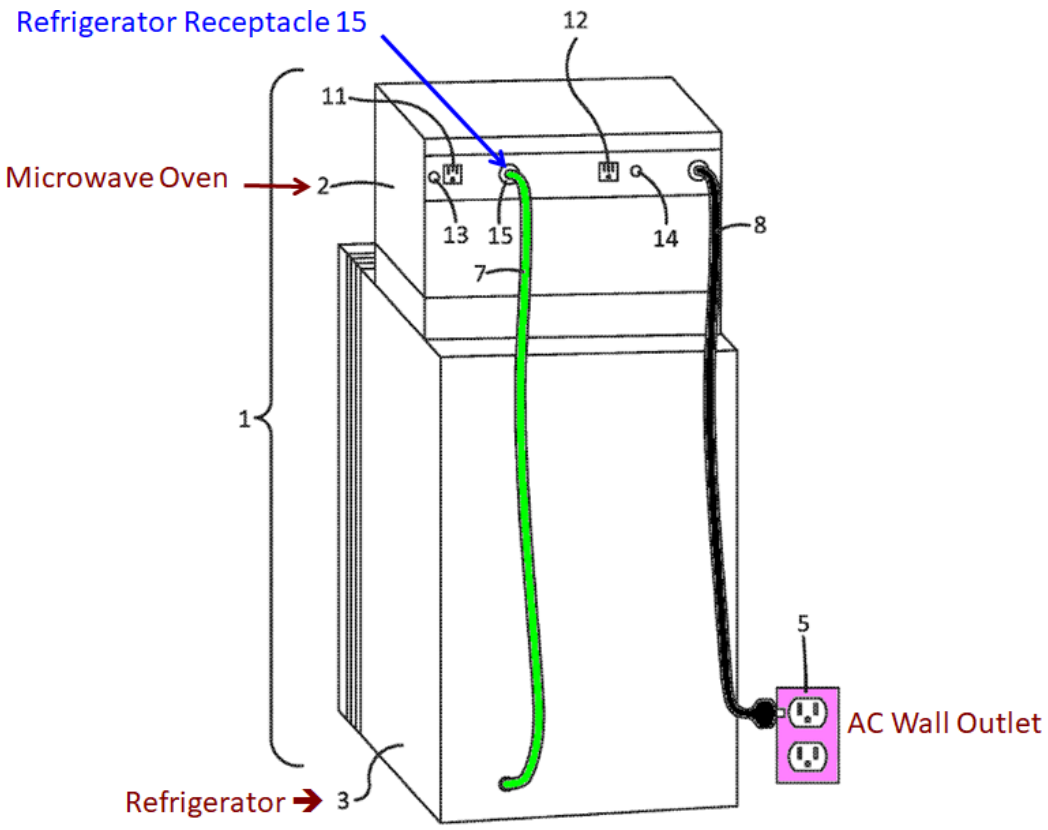

FIGURE 2

Id. at Fig.2 (annotated).

[60]. Additionally, Fig. 4 in Emma, shown below, provides a diagram of Emma's control circuit. Figure 4 discloses the refrigerator receptacle 15 of Fig. 2 (orange) for receiving power cord 7 for connection.

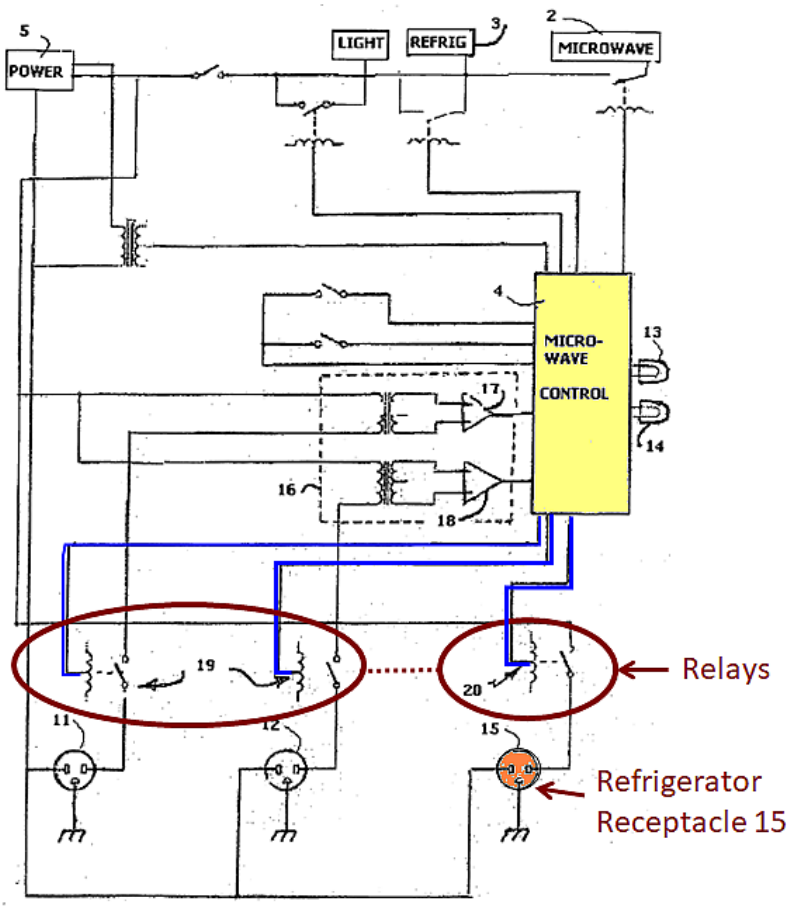

FIGURE 4

Id. at Fig. 4 (annotated).

c. ***"Control Circuit"***

[61]. Claim 1 of the '745 patent recites "at least one power control circuit, wherein the at least one power control circuit is in operative electrical connection with the microwave oven and the refrigerator, a single power cord, wherein the single power cord is configured to be releasably connected to a source of electrical power, wherein the at least one power control circuit is supplied with electrical power only through the single power cord." Claim 15

recites "an appliance including at least one electrical power control circuit… wherein the microwave oven is in operative electrical connection with the at least one electrical power control circuit." Claim 24 recites "at least one power control circuit, wherein the at least one power control circuit is in operative electrical connection with the microwave oven and the electrical connector, a single power cord, wherein the single power cord is configured to be releasably connected to a source of electrical power, wherein the at least one power control circuit is supplied with electrical power only through the single power cord."

[62]. The teaching of most of these elements is explicitly described in my Original Declaration in at least ¶[283] and is incorporated by reference into this section. To the extent there are differences between the '745 Control Circuit and the '876 Control Circuit, for example the recitation of "wherein the at least one power control circuit is in operative electrical connection with the microwave oven *and the electrical connector*" in claim 24, the following teaching of the Emma prior-art reference, as applied to those differences, is further discussed below.

i. *Emma*

[63]. As shown in the control circuit diagram below (Figure 4), Emma discloses a power control circuit providing for digitally operating relays 19

(red) for controlling the low-power auxiliary outlets 11 and 12 (orange), and relay 20 (also red) for controlling refrigerator outlet receptacle 15 (also orange). As Fig. 4 shows, the power-control circuit of Emma is in operative electrical connection with the microwave 2 (via microwave control 4) and the refrigerator (via outlet 15). Outlets 11 and 12 provide operative electrical connections to other auxiliary electrical devices. As shown in Emma Fig. 2 above, the microwave is connected to a source of electrical power (AC wall outlet 5, pink) by a single, unpluggable (i.e., "releasably connected") power cord 8 (black).

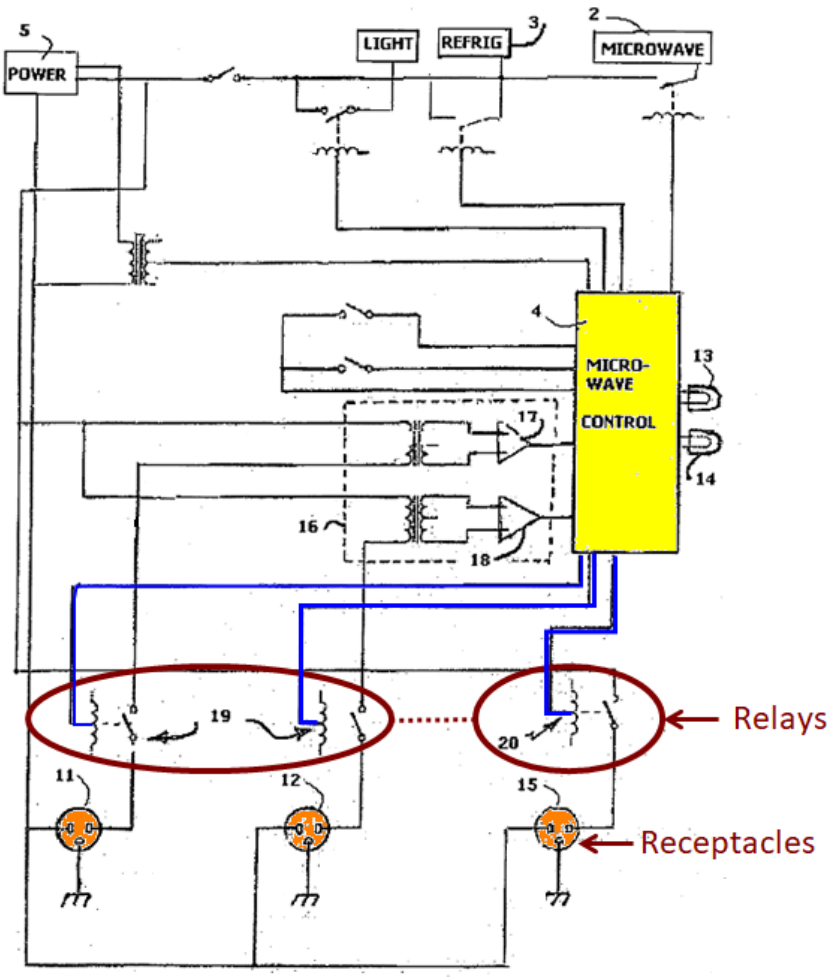

FIGURE 4

Id. at Fig. 4 (annotated).

d. ***"Withhold and Deliver Electrical Power"***

[64]. Claim 1 of the '745 recites "wherein the at least one power control circuit is operative to cause electrical power to be withheld from at least one component of the refrigerator when a magnetron of the microwave oven draws cooking power, and electrical power to be delivered to the refrigerator when the magnetron does not draw cooking power." Claim 15 recites "wherein the at least one electrical power control circuit is operative to cause

electrical power to be unavailable to at least one electrically powered refrigerator component when the magnetron draws cooking power, and electrical power to be available to the at least one electrically powered refrigerator component when the magnetron does not draw cooking power." Claim 24 recites "wherein the at least one power control circuit is operative to cause electrical power to be withheld from the electrical connector when the magnetron of the microwave oven draws cooking power, and electrical power to be delivered to the electrical connector when the magnetron does not draw cooking power."

[65]. The teaching of most of these elements is explicitly described in my Original Declaration in at least ¶[283] and is incorporated by reference into this section. To the extent there are differences between the '745 Withhold and Deliver Electrical Power and the '876 Withdraw and Deliver Electrical Power elements -- for example, specifically reciting "magnetron" of the microwave instead of just "microwave" in each of claims 1, 15, and 24 -- the following teachings found in the prior art, as applied to those differences, are further discussed below.

i. *Emma*

[66]. As stated previously in section VI.A.1.a, the Emma microwave also includes a magnetron. Ex. 1011 ¶¶[0008, 0010, 0011], Fig. 10. Further, as

discussed in Ex. 1002 ¶¶[57-61] of my Original Declaration, microwave ovens function by producing microwaves from a magnetron to provide the cooking energy / power. Accordingly, my statements and conclusion from my Original Declaration with respect to when the microwave draws or does not draw cooking power in Emma are also applicable to the present '876 Withhold and Deliver Electrical Power claim limitations explicitly reciting a magnetron. That is, when a microwave is cooking, or drawing cooking power, so too is the magnetron operating. In fact, as any person of skill would know, the portion of the microwave oven that draws "cooking power" is solely the magnetron component, and the majority of power drawn by the appliance as a whole is the power sent to the magnetron. When the magnetron is shut off by interrupting its input current, the microwave is not cooking, and the power drawn by the appliance as a whole is negligibly minimal. Thus, cooking power and magnetron power are essentially one in the same.

[67]. Further, Emma also explicitly discloses withholding or delivering electrical power to the refrigerator or electrical connector when the magnetron draws or does not draw cooking power.

[68]. First, as shown in Fig. 10 below, the Emma microwave of necessity includes a magnetron (blue). Ex. 1011 ¶¶[0008, 0010, 0011], Fig.

10.

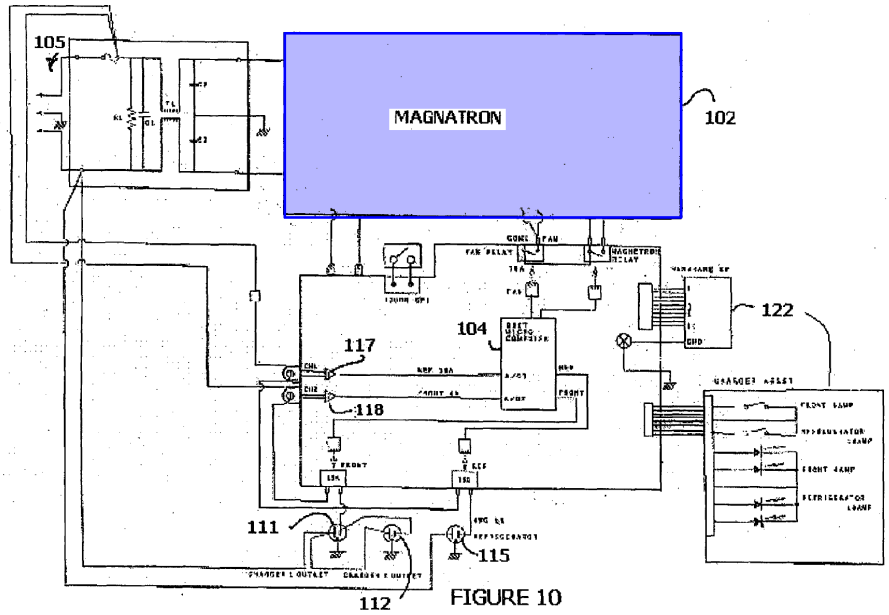

Id. at Fig. 10 (annotated).

[69]. Further, Emma states that "the power to the auxiliary outlets is disabled by the microwave controller when the microwave *magnetron* is energized or whenever the current to the auxiliary outlets exceeds a preset value." Ex. 1011 ¶¶[0010]. In another example, Emma describes a control model

> dependent on the state of operation of the microwave magnetron. . . When power to the microwave is demanded, the compressor is disabled for a preset minimum period. When microwave demand ceases, refrigerator power is restored provided, that the preset minimum period has expired.

Ex. 1011 ¶[0011].

[70]. As discussed above in section VI.A.1.c, the control of the power delivered to the refrigerator or electrical connector is described in Emma, and

in at least one example, by withholding or providing power to refrigerator receptacle 15 via relay 20.

e. ***"Smoke Sensor"***

[71]. Claim 1 recites "wherein the microwave oven includes a smoke sensor, wherein the smoke sensor is positioned in operative connection with a cooking area inside the microwave oven, is in operative connection with the at least one power control circuit." Claim 15 recites "a smoke sensor, wherein the smoke sensor is positioned in operative connection with the cooking area, wherein the smoke sensor is in operative connection with the at least one electrical power control circuit." Claim 24 recites "wherein the microwave oven includes a smoke sensor, wherein the smoke sensor is positioned in operative connection with a cooking area inside the microwave oven, is in operative connection with the at least one power control circuit."

[72]. The teaching of these elements is explicitly described in my Original Declaration in at least ¶¶[289-290] and is incorporated by reference into this section.

f. ***"Shutdown Function"***

[73]. Claim 1 recites "wherein responsive at least in part to a level of smoke sensed by the smoke sensor, the at least one power control circuit is operative to cause cooking power to the magnetron to be withdrawn to end a

current cooking session prior to a set end time of the current cooking session." Claim 15 recites "wherein the at least one electrical power control circuit is configured to cause cooking power to be withdrawn from a magnetron of the microwave oven prior to a set end time of a current cooking session responsive at least in part to the smoke sensor sensing an amount of smoke." Claim 24 recites "wherein responsive at least in part to a level of smoke sensed by the smoke sensor, the at least one power control circuit is operative to cause cooking power to the magnetron to be withdrawn to end a current cooking session prior to a set end time of the current cooking session."

[74]. The teaching of these elements is explicitly described in my Original Declaration in at least ¶[283] and is incorporated by reference into this section. To the extent there are differences between the '745 Shutdown Function and the '876 Shutdown Function, for example in specifically reciting that cooking power is withdrawn from the "magnetron" instead of the "microwave" in each of claims 1, 15, and 24, my Original Declaration also describes specifically withdrawing power from the magnetron. And, as stated above, magnetron power and microwave cooking power are essentially the same. *See* ¶[66]. In addition, the following additional teaching of the prior art, as applied to those differences, is further discussed in this section.

[75]. As discussed in at least ¶¶[57-61] of my Original Declaration, the

cooking power from a microwave oven exists in the form of generated microwaves. Accordingly, to withdraw cooking power, the generation of microwaves by the microwave's magnetron is stopped by interrupting current flow into the magnetron. Given that all microwave ovens utilize a magnetron, this stopping of cooking power necessitates the withdrawing of power to the magnetron. In addition, the following are explicit recitations of withdrawing power to the magnetron as a supplement to my prior statements.

i. *ISDU*

[76]. ISDU discloses that when smoke is detected, operation of the microwave oven ceases, i.e., its magnetron is disabled. The user is thus alerted to the smoke:

> [W]hen smoke is detected during microwave operation, the device will temporarily disable microwave operation and let the user know that the food has begun to smoke or even burn… The product, Integrated Smoke Detection Unit (ISDU) for commercial microwave ovens, will work in the following way. The presence of particulate during cooking will trigger our device thus sounding an alarm and halting microwave operations.

Ex. 1012 at 1.

> The alarm state will consist of a suspension of normal microwave functions *including the cessation of magnetron operation*, a visual alert to be displayed on the integrated microwave LCD, and an audible alert.

Ex. 1012 at 8 (emphasis added).

ii. *Smith*

[77]. Smith discloses a gas sensor that can cause cooking power, i.e., power to the magnetron, to be stopped when the gas sensor senses at least one change in the amount of smoke sensed by the smoke sensor. Figure 5 (reproduced below) shows the control algorithm implemented by the microprocessor for the purpose of smoke detection. As Smith states:

> Upon detection of a rate of change greater than reference ΔL, (Yes to Inquiry 180) a signal is provided at output port R12 causing power control relay 68 to open, thereby deenergizing magnetron 40 and the blower motor 67 (Block 182). …The deenergizing of both the magnetron and the blower motor using either technique in effect turns off power to the oven. …. By detecting the occurrence of a rapid increase in the rate of change of concentration level by the hereinbefore described method, magnetron 40 is deenergized prior to the load being heated in the oven reaching its actual combustion temperature, thereby anticipating a potential fire condition and preventing the load from reaching its combustion point.

Ex. 1014 at 9:17-39.

[78]. Smith Fig. 5 details the control algorithm implemented by the microprocessor following the detection of a fire in the microwave oven. The flow chart of Fig. 5 shows the instruction to "turn off magnetron and blower" at block 182 (blue).

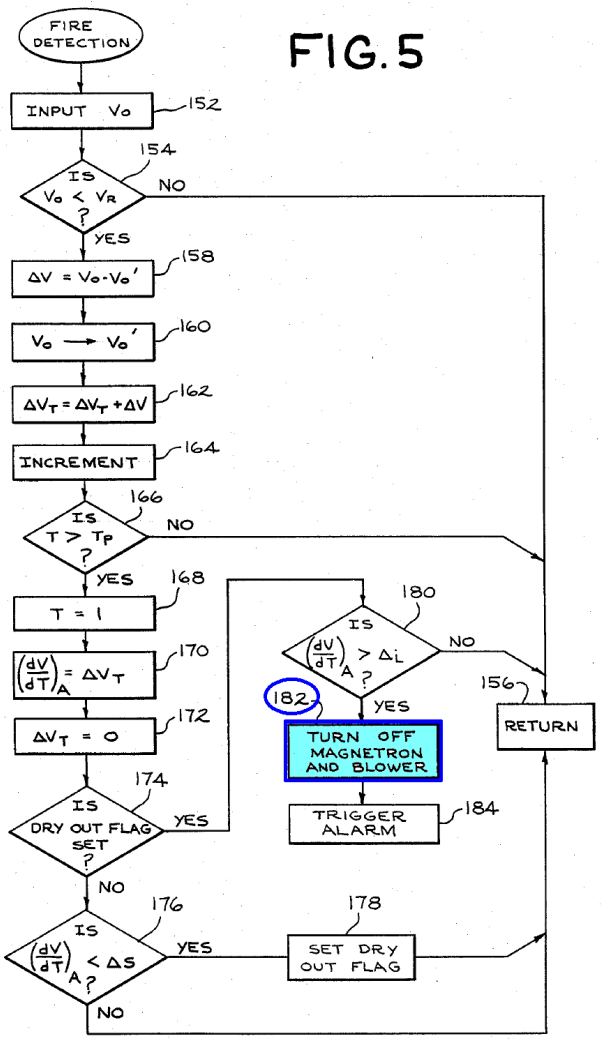

Ex. 1014 at Fig. 5 (annotated).

g. ***"Reset Enable Function"***

[79]. Claim 1 recites "wherein after the current cooking session has been caused to end prior to the set end time based on the sensed level of smoke, the at least one power control circuit is operative thereafter to enable the magnetron to receive cooking power in a next subsequent cooking session." Claim 15 recites "wherein the at least one electrical power control circuit is

configured such that after ending the current cooking session prior to the set end time due to sensing the amount of smoke, to enable cooking power to again be available to the magnetron in a next subsequent cooking session." Claim 24 recites "wherein after the current cooking session has been caused to end prior to the set end time based on the sensed level of smoke, the at least one control circuit is operative thereafter to enable the magnetron to receive cooking power in a next subsequent cooking session."

[80]. The teaching of these elements is explicitly described in my Original Declaration in at least ¶[283] and is incorporated by reference into this section. To the extent that there are differences between the '745 Reset Enable Function and the '876 Reset Enable Function -- for example the specific recitation in claims 1, 15, and 24 of "magnetron" in lieu of "microwave" these mean precisely the same thing, as the cooking power in a microwave is produced solely by its magnetron. Thus, being "operative thereafter [i.e., the end of the current cooking session] to enable the magnetron to receive cooking power in a next subsequent cooking session" means the same thing as being "operative….to enable the microwave to receive cooking power." My Original Declaration also describes the enabling of cooking power to the magnetron as well. In addition, the teachings of the prior art, as applied to those differences, are further discussed here.

[81]. As discussed in at least ¶¶[57-61] of my Original Declaration, the cooking power from a microwave oven exists in the form of generated microwaves. Accordingly, if a microwave is usable again, cooking power to the magnetron must be enabled. In addition, as supplements to my prior statements, the following are explicit recitations of enabling power to the magnetron for a subsequent cooking session.

[82]. ISDU discloses a control circuit operative to enable the microwave and smoke detection device after the cooking session has been ended due to the [Shut Down Function]. As explained below, acknowledgement of the smoke alarm in ISDU will reset normal microwave function:

> Triggering the smoke detector will output a number of alarm conditions to alert the user. The alarm state will consist of a suspension of normal microwave functions including the cessation of **magnetron operation**, a visual alert to be displayed on the integrated microwave LCD, and an audible alert. The latter two prompts will repeat at specified intervals to continuously alert the user to the alarm state and do so until such a time as steps are taken to acknowledge the situation. Acknowledgement of the alarm state will **reinstate all normal microwave functions** and reset the smoke detector circuit for further use.

Ex. 1012 at 8 (emphases added).

[83]. It is my opinion that reinstating all normal microwave functions includes enabling the magnetron to receive cooking power in a next subsequent cooking session.

i. *Smith*

[84]. Smith discloses the electrical circuit shown in FIG. 4 (reproduced below), a portion of which facilitates the microprocessor 64 in disabling power to the microwave magnetron, for example by opening the control relay to stop power to the magnetron:

> Upon detection of a rate of change greater than reference ΔL, (Yes to Inquiry 180) a signal is provided at output port R12 causing power control relay 68 to open, thereby de-energizing magnetron 40 and the blower motor 67 (Block 182). It will be appreciated that fan motor 67 and magnetron 40 could alternatively be de-energized by inhibiting trigger signals to TRIAC gate terminals 146 and 142, respectively, rather than by opening relay 68. The de-energizing of both the magnetron and the blower motor using either technique in effect **turns off power to the oven**. Also following a Yes to Inquiry 180, a signal is provided at R11 triggering the alarm oscillator circuit 69 into oscillation to provide an audible signal to the user that a fire condition in the cavity is imminent (Block 184).

Ex. 1014 at 9:17-39 (emphasis added).

[85]. These features of Smith's circuit are highlighted in the annotated version of Fig. 4 shown below. This figure shows the signal pathways by which the disclosed power-control relay and TRIAC are electronically controlled by microcontroller 64. The signal to control the former is buffered by relay driver 136 (green), whereas the signals to control TRIACs 140 and 144 (red) are transferred via generic optocouplers 143 and 145 (pink):

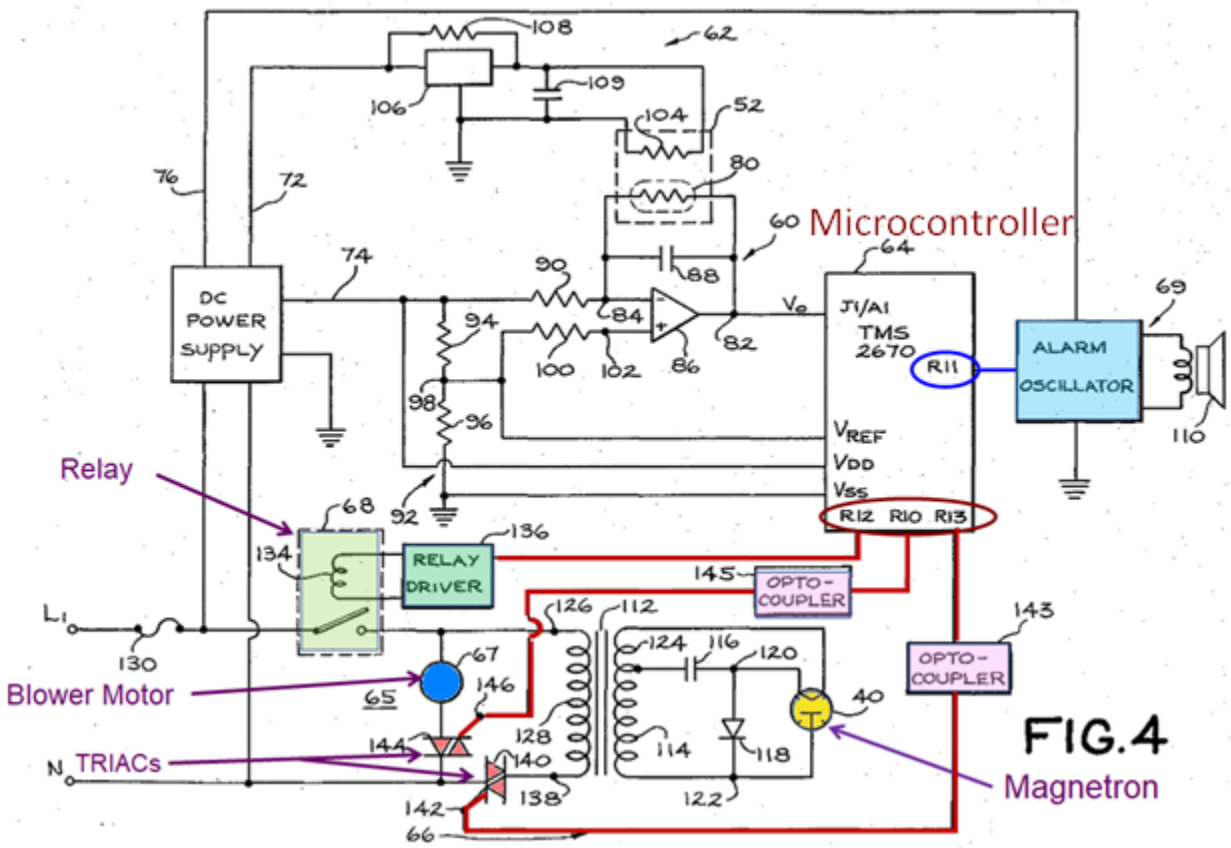

Id. at Fig. 4 (annotated).

2. <u>The '745 USB Port Claims (Claims 12, 14, 19, 23 and 26)</u>

[86]. Dependent claims 12 and 19 recite: "wherein the microwave oven includes a USB port, wherein the USB port is in operative connection with at least one power control circuit, wherein the USB port is not operative to deliver electrical power from the USB port when the magnetron draws cooking power." Ex. 1001 Claim 12 and 19.

[87]. Dependent claims 14 and 23 recite: "wherein the microwave oven includes a USB port, wherein the USB port is in operative connection with the at least one power control circuit, wherein the USB port is operative to deliver

electrical power." Ex. 1001 Claim 14 and 23. Dependent claim 26 recites: "wherein the microwave oven further includes at least one USB port, wherein the at least one USB port is in operative connection with the at least one power control circuit." Ex. 1001 Claim 26. As explained below, these elements can be found in the prior art.

Quezada

[88]. Quezada teaches a power-sourcing receptacle that integrates an AC electrical receptacle and a USB port that serves as a direct current (DC) power source. Ex. 1020, ¶(57) Abstract. As shown below in Fig. 2, one embodiment in Quezada includes a 120-V AC power sourcing receptacle 100. The lower half of the receptacle 102 (red), which has the form factor of the well-known "duplex outlet," provides 120-V AC at 110a and 110b, plus ground at 112. The upper half 104 of the receptacle 104 (blue) comprises a standard USB output port well known in the art. *Id.,* Ex. 1020, ¶[0023].

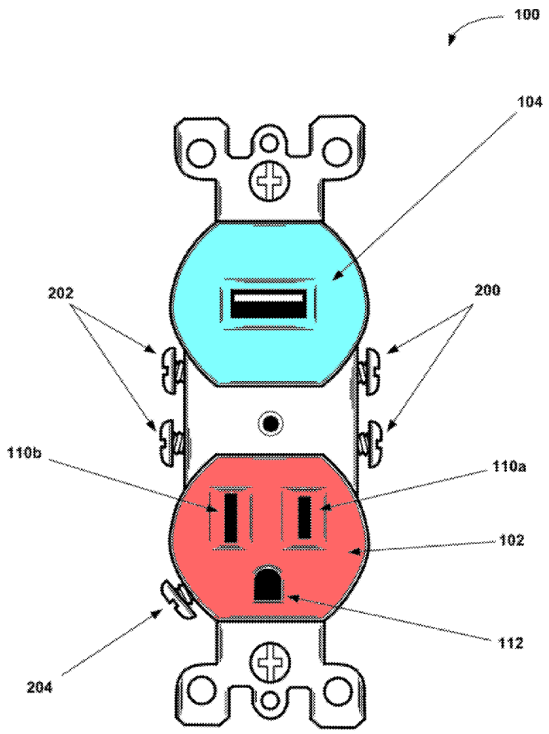

FIG. 2

Ex. 1020, Fig. 2 (annotated).

[89]. As Quezada states, "The USB receptacle 104 provides 100-150 milliamps (mA) and 5 volts direct current (DC) to devices inserted into USB receptacle 104." Ex. 1020, ¶[0025]. Thus, as would also have been well-known in the art, the USB receptacle 104 can provide DC power to computer peripherals, digital cameras, printers, personal media players, flash drives, "and other devices capable of accepting power or charge via a USB connector." *Id*. Note that the invention of Quezada serves to energize only the ±DC power source terminals of the USB connector, but not the data terminals. (See, e.g., *Id*. at [0032]).

[90]. Figure 6, again reproduced below, is a block diagram from Quezada showing the flow of power to the USB port 104 (blue) and AC receptacle 102 (red) from the "Main Power Source". Ex. 1020, ¶[0039]. The main power source supplies power directly to AC receptacle 102 and directly to USB regulated voltage sourcing unit ("RVSU") 600 (yellow). *Id.,* Ex. 1020, ¶¶[0039-40],

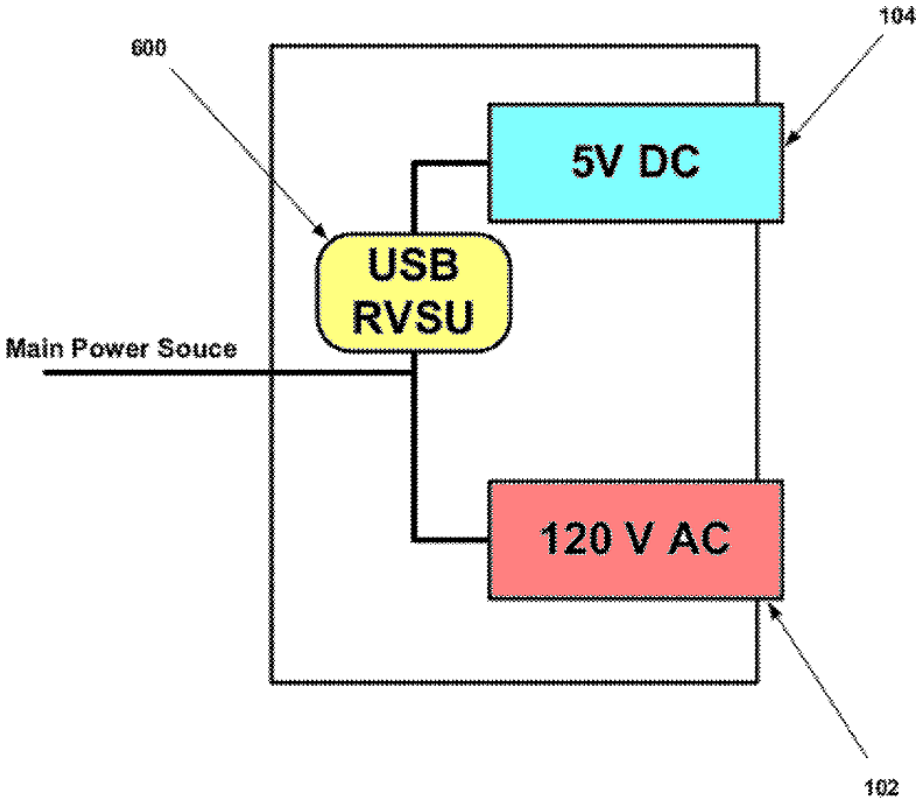

FIG. 6

Ex. 1020, Fig. 6 (annotated).

[91]. As shown in Quezada Fig. 7, reproduced below, the USB RSVU 600 includes a transformer 700 (red) that steps down the incoming source voltage to a nominal 5 volts AC, and a rectifier 702 (green) that converts the

AC voltage from alternating to pulsating direct current. Filter 704 (purple) then smooths the pulsating waveform into a steady DC voltage. The voltage regulator 706 (blue) maintains the voltage at the desired 5V magnitude. Ex. 1020, Fig. 7, ¶[0041]. Illustrative examples of the waveforms comprising the outputs of the various stages were provided above, *supra*.

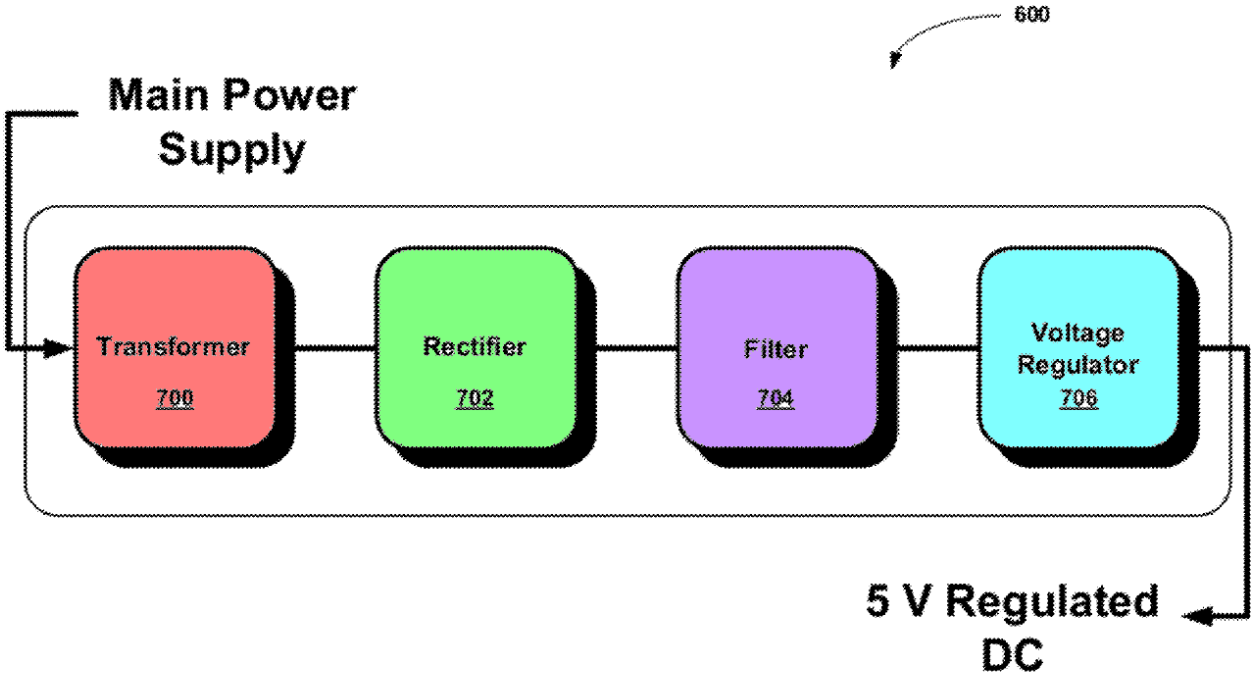

FIG. 7

Ex.1020, Fig. 7 (annotated).

[92]. As Quezada teaches, the USB RVSU 600 provides a 5-volt regulated voltage to the USB port 104. *Id*.

3. Claims 13 and 20 ("Auxiliary Output Device")

[93]. Dependent claims 13 and 20 recite: "wherein the microwave oven

further includes at least one output device including at least one of…an auxiliary electrical outlet, wherein the at least one output device is in operative connection with the at least at least one power control circuit, and wherein the at least one power control circuit is operative cause the at least one output device to be inoperative when the magnetron draws cooking power." Claim 13 and 20.

[94]. The teaching of these elements is described in my Original Declaration in at least ¶¶[291-294] and is incorporated by reference into this section. To the extent there are differences between the '745 Auxiliary Output Device and the '876 Auxiliary Output Device, for example, specifically reciting that "the at least one power control circuit is operative to cause the at least one output device to be inoperative when the *magnetron* draws cooking power" instead of the term "microwave" found in each of claims 13 and 20, my Original Declaration also describes enabling cooking power to the magnetron as well. In addition, the following teaching of the prior art, as applied to those differences, are further discussed here.

a. ***Emma***

[95]. As I stated previously, (*see* ¶[56] of this declaration) the microwave oven in Emma also includes a magnetron. Ex. 1011 ¶¶[0008, 0010, 0011], Fig. 10. Further, as discussed in at least ¶¶[57-61] of my Original

Declaration, microwave ovens function by producing microwaves from a magnetron to provide cooking power/energy. Accordingly, the statements and conclusion from my Original Declaration with respect to when the microwave draws or does not draw cooking power in Emma are also applicable to the present ’876 Auxiliary Output Device claim limitations that explicitly recite a magnetron.

[96]. Further, Emma also explicitly discloses withholding or delivering electrical power to an auxiliary output device when the magnetron draws cooking power.

[97]. First, as I have noted above, and as shown in Emma Fig. 10 below, the Emma microwave includes a magnetron (blue). Ex. 1011 ¶¶[0008, 0010, 0011], Fig. 10.

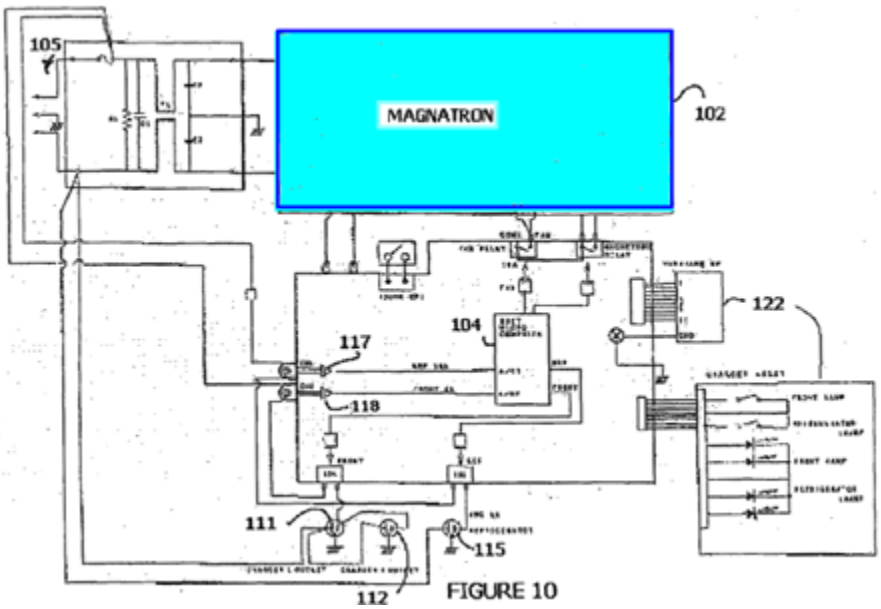

Ex.1020, Fig. 10 (annotated).

[98]. Further, as Emma states, "the power to the auxiliary outlets is disabled by the microwave controller when the microwave *magnetron* is energized or whenever the current to the auxiliary outlets exceeds a preset value." Ex. 1011 ¶[0010].

[99]. Emma discloses a microwave oven that includes at least one auxiliary low power outlet receptacle (i.e., "an auxiliary electrical outlet") "for plugging in low power device for example, rechargeable devices, such as cellular phones, PDA's or other electronic devices that do not demand high power." Ex. 1011 ¶[0027]. The auxiliary electrical outlet is in operative connection with the control circuit, and wherein the microcontroller is operative to cause the auxiliary low power receptacle to be inoperative when the microwave oven / magnetron demands cooking power". Ex. 1011 at ¶¶[0010, 0038]. Emma describes enabling and disabling power to the microwave oven and its first and second power supply outlets based on the control algorithm in the processor:

> wherein the control processor is configured to enable or disable power to the microwave oven, ***the first power Supply outlet and the second power Supply outlet***, according to an algorithm in the control processor, and wherein the algorithm causes the control processor to: disable the refrigerator and the second power Supply outlet, when the microwave demands power; and enable the second power supply outlet when the microwave is off.

Id. at claim 1 (emphasis added).

[100]. As shown in Emma Figure 4 (annotated below), Emma discloses a control circuit for digitally operating relays 19, 20 for controlling the low-power auxiliary outlets 11, 12, and refrigerator receptacle 15:

> Microprocessor 4 would control the power to microwave 2 and refrigerator 3 and also low power receptacles 11 and 12 to avoid overload conditions. . . . Controller 4 is coupled directly to refrigerator outlet 15 and low power outlets 11 and 12.
>
> Ex. 1011 at ¶[0031].

[101]. Additionally, Emma states:

> To avoid overload conditions, power to the low-power receptacles 11 and 12 and refrigerator receptacle 15 is disabled during microwave operation.
>
> Ex. 1011 at ¶[0033].

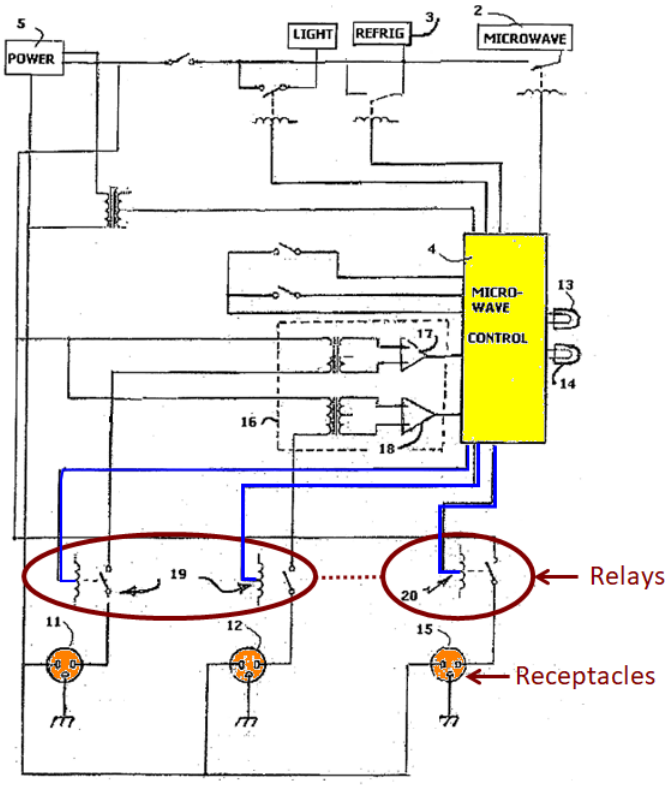

FIGURE 4

Ex. 1011 at Fig. 4 (annotated).

[102]. As shown in Figure 7 (reproduced below), Emma further teaches that priority is given to the power demands of the microwave oven.

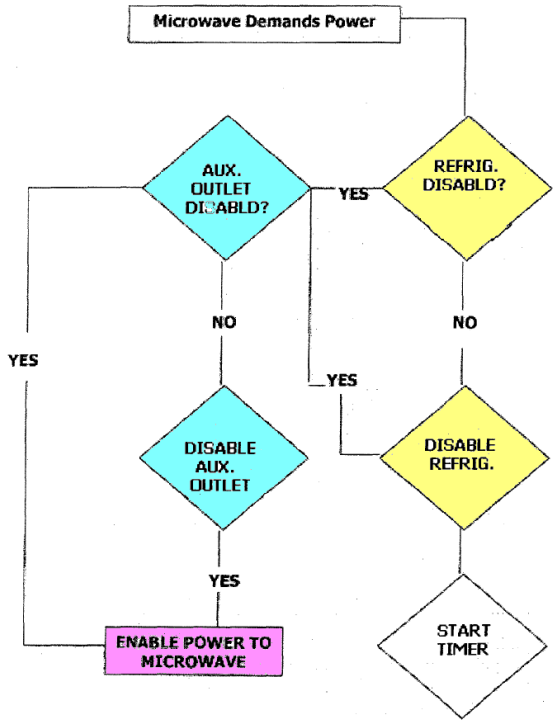

FIGURE 7

Ex. 1011 at Fig. 7 (annotated).

[103]. As noted above, "[u]se of the receptacles 11, 12, and 15 are, therefore, disabled during microwave operation. The operational models…may be established by algorithms that are programmed or imbedded in controller 4." *Id.* at ¶[0038].

4. <u>Claim 22 ("Sensor")</u>

[104]. Claim 22 of the '745 patent recites: "wherein the smoke sensor includes at least one of…a photosensor . . . an ionization sensor, and a VOC sensor."

[105]. The teaching of these elements is explicitly described in my

Original Declaration in at least ¶[295-297] and is incorporated by reference into this section.

B. Reasoning Supporting Opinions on Invalidity of the'745 Patent

1. Obvious in view of Emma combined with ISDU

[106]. In my opinion, each of '745 claims 1, 13, 15, 20, 22, and 24-25 is obvious in view of Emma combined with ISDU, because it would have been obvious to combine the microwave-refrigerator appliance of Emma with the smoke sensor disclosed in ISDU. There are numerous reasons why a POSITA would have combined the microwave/refrigerator combination of Emma with the smoke sensor of ISDU. First, all the claimed elements were known in the prior art, and a POSITA would have combined the elements as claimed by known methods, with no change in their respective functions. This combination would have yielded nothing more than results predictable by one of ordinary skill in the art. While Emma fails to recite a smoke sensor, Emma does disclose adding functionality to appliances by cycling power to a refrigerator and auxiliary electrical outlets for the purpose of improving the safety of the Emma appliance (preventing overload conditions). Emma's teaching would therefore have motivated a POSITA to look to further microwave functionalities, including those in ISDU.

[107]. Both Emma and ISDU disclose shutdown conditions while using

electrical cooking appliances that provide added functionality. Additionally, the ISDU publication explicitly relates to added features of microwave ovens. It would have been obvious to a POSITA to combine the additional microwave oven safety features of ISDU into the Emma microwave/refrigerator combination appliance to provide the added microwave features discussed in ISDU. Specifically, it would have been obvious to enable the Emma microwave to shut down upon the detection of smoke and to reenable the Emma microwave for a further cooking session when the smoke had cleared. Further, it would have also been obvious to a POSITA to modify ISDU with the features of the microwave/refrigerator combination of Emma for the purpose and convenience of having an "all-in-one appliance" in addition to the safety feature of managing total power draw as taught by Emma.

[108]. Finally, the claims recite that "the smoke sensor is positioned in operative connection with a cooking area" or "with a cooking area inside the microwave oven." In my opinion, ISDU meets this limitation because it operates in response to conditions in the microwave. However, to the extent the Board determines there is a positioning requirement, and that the smoke sensor in ISDU is not in "operative connection with the cooking area inside the microwave oven," a POSITA would have found it obvious to have done

so. Based on the teaching and suggestion provided in ISDU, it would have been obvious to a POSITA to place the smoke sensor within a sufficient position to the cooking area for the sensor to operate with respect to the source of smoke (e.g., initiating at the food being heated). This positioning would have been consistent with the express teaching of ISDU that the sensor be integrated with the microwave oven. Additionally, ISDU specifically teaches this approach. When referring to the prior art, ISDU states: "[w]ith the introduction of a smoke detection circuit *inside* the microwave, the consumer will be alerted by a louder, more intense alarm, that they have overcooked their food or that there is another cause of smoke *inside* the microwave." Ex. 1012 at 4.

[109]. Based on ISDU's teaching and/or the motivation to have the smoke sensor be optimally positioned in a location where it could detect generated smoke close to its source, a POSITA would have placed, or at least tried to place, the smoke-detection sensor in operative connection with the cooking area of the microwave oven; otherwise, the sensor would not function as intended. The POSITA would have had a reasonable expectation of success in detecting smoke more quickly compared to attempting to detect smoke using a smoke detector positioned further away from the cooking area.

[110]. Additionally, it would have been "obvious to try" placing the sensor

in operative connection with the cooking area of the microwave as opposed to outside/around the microwave oven, as there are only a finite number of identified, predictable solutions (i.e., just two feasible locations: inside or outside), with a reasonable expectation of success. ISDU emphasizes that at the time, there was a market need to prevent fires but only a finite number of solutions for integrating smoke sensors into microwave ovens. Further, it would have been obvious to integrate any smoke sensor inside a microwave oven to create a commercially integrated package for sale and shipping. A POSITA would have pursued trying to place the smoke detection sensor inside the microwave oven with a reasonable expectation of success which would have been grounded on the disclosures of the prior art.

[111]. Should the Board decide that "operative connection" means close proximity, ISDU teaches this as well. It would have been well understood from the art how a microwave oven and a smoke detection sensor work (the smoke detector should be in proximity to the cooking operation to detect the smoke), and a POSITA would have substituted the placement of the smoke sensor inside as opposed to outside/around the microwave oven and obtained predictable results.

[112]. To the extent the Board determines that the combination does not expressly recite a "plurality of electrically powered refrigerator components,"

it is my opinion that it would have been obvious to do so. First, it would have been obvious to a person of ordinary skill in the art that in order for the refrigerator discussed in Emma to operate properly, there would have to have been more than one electrically powered refrigerator component (i.e., "a plurality"). Emma teaches "The appliances (microwave and refrigerator) maybe of standard design with features commonly available. The internal components of the appliances are well known and do not need to be described herein." Ex. 1011 at ¶[0026]. In my opinion, a POSITA would have understood this to mean that Emma contained at least a plurality of electrically powered refrigerator components or, alternatively, it would have been obvious to include a plurality of electrically powered refrigerator components. Some examples of the latter would have included a compressor (explicitly disclosed), an indicator light (expressly disclosed), control circuitry (expressly disclosed), a compressor fan, an internal light, and/or a circulating fan.

2. Obvious in view of Emma combined with Smith

[113]. In my opinion, each of claims 1, 13, 15, 20-22, and 24-25 are obvious in view of Emma combined with Smith. As discussed above, Emma discloses a microwave refrigerator combination. Smith teaches a microwave oven that is designed to shut down the microwave based on a smoke sensor

positioned inside the microwave oven and in operative connection with the cooking area detecting the food being cooked almost reaching its combustion point. The only element of Smith which might be argued is not expressly recited is the Reset Enable Function. Nevertheless, I believe it would have been obvious to a POSITA to have modified Smith and/or the Smith-Emma combination to reset the microwave oven following the smoke sensor no longer sensing smoke. First, based on a teaching suggestion or motivation in Smith, a POSITA would have known to modify Smith and/or the Smith-Emma combination to obtain the Reset Enable Function.

[114]. The design of Smith and/or the Smith-Emma combination is non-destructive, in that the designed mechanism to shut down the microwave during a smoke-sensor event is configured to be reversible by the microcontroller-based control circuit of Smith and/or the Smith-Emma combination. This functionality could have been facilitated by the use of an electronically controlled relay. Further, Smith and/or the Smith-Emma combination teach that a goal of the Smith smoke sensor is to anticipate fires before they occur. Ex. 1014 at 1:6-9. Resetting the microwave – undamaged upon early detection of a fire in its early stages – would re-enable the microwave for use again in a subsequent cooking session and would prevent replacing a costly appliance or arranging a service call when such

replacement or service call would be unnecessary. Moreover, a POSITA would have understood that modifying Smith and/or the Smith-Emma combination to return to a reset state following a shutdown condition and resetting the smoke detection circuitry would yield a reasonable expectation of success and allow for successive detection of smoke events. A POSITA would have understood, for example, that a microwave is a commercially sold cooking appliance. It would be problematic to offer for sale a microwave oven that had to be serviced or replaced after just one trip of its smoke-detection circuit. Lastly, as discussed previously, it would have been "obvious to try" to add a Reset Enable Function because all of the microwave components disclosed in Smith and/or the Smith- Emma combination are non-destructive, as discussed above, and are designed to be power cycled. Thus, there would have been only a finite number of potential solutions and conditions for restarting the microwave after the shutdown. A POSITA would have included such a feature with a reasonable expectation of success.

[115]. There are numerous reasons why a POSITA would have combined the microwave / refrigerator combination taught in Emma with the Smoke Sensor operatively placed inside the microwave oven in Smith.

[116]. First, Emma and Smith each relate to optimizing electric cooking appliances. Second, all the claimed elements of the above referenced claims

were known in the prior art, and a POSITA would have combined the elements as disclosed by known methods for the purposes of providing Emma's microwave / refrigerator combination with Smith's smoke sensor operatively connected with the cooking area. I believe that such a combination would have yielded nothing more than predictable results to one of ordinary skill in the art. While Emma fails to recite a smoke sensor, Emma does disclose adding functionality to appliances by cycling power to a refrigerator and auxiliary electrical outlets for the purpose of improving the safety of the Emma appliance (preventing overload conditions). Emma's teaching would have motivated a POSITA to look to further microwave functionalities, including those in Smith.

[117]. Any inclusion of Smith's smoke sensor, operatively connected with the cooking area, with Emma would have resulted in such elements merely performing the same function as they do separately, i.e., sensing smoke to withdraw electrical power from an electrical cooking appliance, and then enabling the resetting of the electrical cooking appliance. A POSITA would have recognized the results of said combination to be predictable, because Emma and Smith function via digital power-control circuitry in an electrical appliance based on a sensor input.

[118]. Third, a POSITA would have been motivated to combine Emma

and Smith based on the teachings of each reference. Specifically, Emma and Smith are each directed towards shutting down a component of the device in response to a sensor output indicative of an unwanted condition. Emma teaches the withholding of power based on the power demands of the microwave oven. I believe that Smith inherently teaches a power-control relay designed to be power cycled by the controller. It would have been obvious to a POSITA to modify Emma with Smith to include the smoke sensor in operative connection with the microwave oven following the elimination of the unwanted condition that had been detected. In my opinion, a POSITA would have been able to pursue any of these known potential solutions with a reasonable expectation of success grounded in the disclosures of the prior art.

[119]. Lastly, a POSITA would also have found the asserted combinations of Emma and Smith "obvious to try." As shown in Emma and Smith, at the time of the invention there was a recognized need in the art to optimize microwave ovens. Ex. 1011 at ¶[0007] 1014 at 1:6-40. Therefore, it would have been obvious to a POSITA to try this combination.

3. <u>Obvious in view of Emma combined with Butt, and alternatively, with Butt and Smith</u>

[120]. In my opinion, each of '745 claims 1, 13, 15, 20-22, and 24-25 is obvious in view of Emma combined with Butt or, alternatively, with Butt

and Smith. It would have been obvious to combine the microwave / refrigerator combination of Emma with the smoke sensor taught in Butt. The only element of an Emma/Butt combination which one might argue is not expressly recited is "wherein the smoke sensor is positioned in operative connection with a cooking area inside the microwave oven." Nevertheless, it would have been obvious to a person of ordinary skill in the art to modify the Emma/Butt combination to teach a smoke sensor in operative connection with a cooking area inside a kitchen appliance -- in this case a microwave oven. Butt teaches a user-enabled reset device which can be initiated following the smoke detector unit detecting smoke and ceasing the supply of power to the appliance. *See* Ex. 1002 ¶[105-08]. Butt's reset function reinitializes the system for further use by checking for a smoke-alarm system signal and then closing a relay to reconnect the electrical appliance to AC power if no such signal is detected. *See* Ex. 1002 ¶¶[192-95].

[121]. There are numerous reasons why a POSITA would have made a modification to the Emma/Butt combination so as to position the smoke-detection sensor in operative connection with the inside of the microwave oven. First, based on the teaching and suggestion provided in the Emma/Butt combination, it would have been obvious to a POSITA to place the smoke sensor to be in operative connection with the cooking area inside the

microwave oven, because doing so would place the sensor in closer proximity to the source of smoke (initiating at the food being heated). The smoke detector would need to be in operative connection for it to function as a smoke detector. It would have been consistent with the express teaching of Butt that the sensor be integrated with the kitchen appliance.

[122]. Based on Butt's teaching and/or the motivation to have the smoke sensor be positioned in a location to detect generated smoke close to its source, a POSITA would have placed, or at least tried to place, the smoke-detection sensor in operative connection with the cooking area of any kitchen appliance -- in this case a microwave oven. The POSITA would have had a reasonable expectation of success in detecting smoke more quickly compared to attempting to detect smoke using a smoke detector positioned further away from the cooking area.

[123]. There are numerous reasons why a POSITA would have combined the microwave / refrigerator combination of Emma with the smoke sensor of Butt. First, all the claimed elements were known in the prior art, and a POSITA would have combined the elements as claimed by known methods, with no change in their respective functions. The combination would have yielded nothing more than predictable results to one of ordinary skill in the art. While Emma fails to recite a smoke sensor, Emma does disclose adding

functionality to appliances by cycling power to a refrigerator and auxiliary electrical outlets for the purpose of improving the safety of the Emma appliance (preventing overload conditions). Emma's teaching would have motivated a POSITA to look to further microwave functionalities, including those in Butt.

[124]. Both Emma and Butt disclose shutdown conditions while using electrical cooking appliances that provide added functionality. Additionally, Butt explicitly relates to added features of kitchen appliances. *See* Ex. 1002 ¶¶[105-08]. It would have been obvious to a POSITA to combine the additional kitchen-appliance safety features of Butt with the Emma microwave / refrigerator combination so as to enable the Emma microwave to shut down upon the detection of smoke, and to reenable the Emma microwave for a further cooking session when the smoke had cleared. Further, it would have also been obvious to a POSITA to modify Butt with the features of the microwave / refrigerator combination of Emma for the purpose and convenience of having an "all-in-one appliance" in addition to the safety feature of managing total power draw as taught by Emma.

[125]. To the extent the Board determines that the combination of Emma and Butt does not render obvious the above referenced claims, it would have been obvious to a POSITA to combine Emma with Butt and Smith.

[126]. First, Emma, Butt and Smith each relate to optimizing electric cooking appliances. Second, all the claimed elements of the above referenced claims were known in the prior art, and a POSITA would have combined the elements as disclosed by known methods for the purposes of modifying Emma's microwave / refrigerator combination to include Smith's smoke sensor to be operatively connected with its cooking area and to include Butt's smoke sensor and reset functionality. Such a combination would have yielded nothing more than predictable results to one of ordinary skill in the art. Any inclusion of Butt's reset functionality with Smith's smoke sensor operatively connected with the cooking area into Emma would result in such elements merely performing the same function as they do separately, i.e., sensing smoke to withdraw electrical power from an electrical cooking appliance and then re-enabling the electrical cooking appliance. A POSITA would have recognized that the results of said combination were predictable, because Emma, Butt and Smith function to digitally control power-control circuitry for an electrical appliance based on a sensor input.

[127]. Third, a POSITA would have been motivated to combine Emma, Butt and Smith based on the teachings of each reference. Specifically, Emma, Butt and Smith are each directed towards shutting down a component of the device in response to a sensor output indicative of an unwanted condition,

Emma teaches the withholding of power based on the power demands of the microwave oven. Butt discloses shutting down electrical cooking appliances in response to a smoke sensor, and also discloses resetting the electrical power supply to the cooking appliance after a smoke-triggered shutdown condition. *See* Ex. 1002 ¶¶[182-85]. Similarly, Smith inherently teaches a power-control relay for the microwave magnetron designed to be power cycled by the controller. *See* Ex. 1002 ¶[104]. It would have been obvious to a POSITA to modify Emma with Butt and Smith to include the smoke sensor in operative connection with the microwave oven with the reset functionality disclosed by Butt for the added benefit of reusing the microwave oven. A POSITA would have been able to pursue any of these known potential solutions with a reasonable expectation of success grounded in the disclosures of the prior art.

[128]. Further, a POSITA would also have found the asserted combinations of Emma and Butt with Smith "obvious to try." As shown in Emma, Butt, and Smith, at the time of the invention there was a recognized need in the art to optimize microwave ovens. Ex. 1011 ¶[0007]; Ex. 1015 at 1:22-44 and Ex.1014 at 1:6-40. Therefore, it would have been obvious to a POSITA to try this combination.

[129]. Lastly, if it is determined that Butt fails to teach the VOC Sensor

claim element, it would have been obvious to a POSITA to use either a photoelectric or ionization smoke sensor as the smoke sensor in Butt, because photoelectric and ionization smoke sensors were common smoke-detector designs that would have been known to a POSITA. Such designs are further evidenced by ISDU which discusses both ionization and photoelectric smoke detectors. Ex.1012 at 9.

4. Obvious in view of Emma combined with one of ISDU and Smith and the Knowledge of a POSITA

[130]. In my opinion, the Dependent Claims 12, 14, 19, 23, and 26, which claim USB ports with certain functionalities, are invalid because it would have been obvious to combine the microwave refrigerator combination of Emma with the smoke sensors taught in ISDU or Smith, and also substitute Emma's auxiliary port for a USB port for power delivery to small electronic devices.

[131]. The bases for combining Emma's microwave refrigerator with the smoke sensors taught in ISDU or Smith are provided in Sections VI.B.21 and VI.B.2, incorporated herein by reference. In my opinion, a POSITA would have found it obvious to substitute the auxiliary ports on Emma's microwave with USB ports in light of the knowledge of a POSITA. First, Emma specifically teaches providing low-power auxiliary outlets for the purposes of recharging cellular phones and other low-power devices; based on this

teaching suggestion or motivation in Emma, a POSITA would have known to modify Emma's front panel by adding USB ports, or by substituting USB ports for Emma's auxiliary outlets 11 and 12 on the front panel of the microwave. Both would serve the purpose of providing a known, low-power charging means for the purpose of providing power to small electronic devices. Emma teaches using "low power" auxiliary ports to charge small electronic devices, such as cell phones. Ex. 1011 ¶[0027]. "A maximum current may be set by controller 4 to prevent overload of the outlets 11 and 12." Ex. 1011 ¶[0029]. The POSITA would have known at the time that the use of USB ports to deliver power to small devices like cell phones was prolific worldwide in the time frame of the Challenged Patents. Moreover, the POSITA would have known that the use of devices to convert AC to DC for charging small electronic devices such cell phones and cameras via USB ports was also prolific. In fact, in 2009, around the time of Emma and well before the invention date of the Challenged Patents, the USB Implementers Forum had released the USB Battery Charging Specification 1.1 as an extension of the USB specifications to battery charging over USB to provide additional current in excess of the previously released USB 2.0 specification. Appendix G. As early as 2004, well before the April 25, 2014 priority date of the Challenged Patents, Apple had already released the fourth generation iPod

which provided for the ability to "conveniently charge iPod with either the included FireWire or USB cable." Appendix H. In my opinion, long before the April 25, 2014 priority date, a POSITA would have known that the use of USB ports to charge small electronic devices was a convenient, desirable, and well-known feature.

[132]. A POSITA would have understood that modifying Emma's microwave panel to add a USB port or to substitute a USB port for the auxiliary outlet would have yielded a reasonable expectation of success and would have allowed for the charging of electronic devices, such as cell phones. A POSITA would have understood, for example, that AC/DC conversion and USB ports were commonplace at the time and were rapidly becoming the worldwide standard of the day for charging small electronic devices. Thus, it would have been known that such USB ports were being utilized for charging purposes in several different implementations; these would have included in-home computers, vehicles, and wall outlets. A POSITA would have recognized that a commercially sold microwave appliance already used as a source for charging small electronic devices through its auxiliary outlets, as taught by Emma, would similarly benefit from being equipped with USB ports for charging. This change would also have been motivated by the standardization of the USB port, its smaller size

(compared to conventional AC outlets), and ability to connect electronics directly via the USB cables normally supplied by device manufacturers. Examples include companies making personal media players and cell phones.

[133]. Further, it would have required no more than a simple substitution of one known element in Emma for another to obtain predictable results. Emma teaches an auxiliary port charging small electronic devices like cell phones. A POSITA would have known to include USB ports or would have substituted one or more of the auxiliary ports with a USB port, especially given the increased acceptance and standardization of USB ports for use in charging small electronic devices. The results of doing so would also have been predictable, i.e., the USB ports would charge small electronic devices just as they did when used in other devices (e.g., in cars, wall outlets adapters, etc.).

[134]. Lastly, it would have been "obvious to try" to add a USB port to deliver power to small electronic devices as discussed previously, because this type of power charging was common at the time of the invention. There were a finite number of potential solutions and conditions for charging small electronic devices at the time, and USB ports for charging were well known and standardized for the purpose of battery charging. A POSITA would have included such a feature with a reasonable expectation of success, as discussed

above.

5. Obvious in view of Emma combined with one of ISDU or Smith, and further combined with Quezada

[135]. In my opinion, dependent claims 12, 14, 19, 23, and 26, which claim USB ports having certain functionalities, are invalid, because it would have been obvious to a POSITA to combine the microwave / refrigerator combination of Emma with the smoke sensors taught in ISDU or Smith, and also to combine USB ports for charging electronic devices with the electrical outlets of Emma. This combination is taught by Quezada.

[136]. The bases for combining Emma's microwave / refrigerator with the smoke sensors taught in ISDU or Smith are provided in Sections VI.B.1 and VI.B.2 and are incorporated herein by reference. With respect to USB ports, there are numerous reasons why a POSITA would have combined or substituted the USB ports and accompanying AC/DC power conversion circuity taught in Quezada with Emma's microwave auxiliary-port charging feature. First, Emma teaches that a standard household electrical outlet is included in the Emma microwave as a "low power" auxiliary port to charge small electronic devices, such as cell phones. Ex. 1011 ¶[0027].

[137]. Quezada teaches incorporating USB ports as an alternative to or in combination with standard AC electrical outlets. Specifically, Quezada teaches a combined power sourcing receptacle that can include both a

standard AC electrical receptacle and a USB port for charging small electronics. In Quezada's combined mountable sourcing unit, power is provided to an AC electrical receptable and also to a USB regulated voltage sourcing unit that converts AC to DC and sends regulated DC voltage to the USB ports. Thus, Quezada teaches a system for powering devices through both USB and standard AC electrical ports that is mountable in a small area. All of the claimed elements were thus known in the prior art, and a POSITA would easily have combined the elements as disclosed by known methods for the purpose of adding Quezada's USB port charging to Emma's microwave auxiliary port charging. Such a combination would have yielded nothing more than predictable results to a POSITA. Any addition of Quezada's USB technology to Emma would likewise have resulted in such elements merely performing the same function as they do separately, i.e., charging small electronic devices with DC. A POSITA would have recognized that the results of this combination were predictable, because Quezada functions in the same way as does Emma, i.e., to deliver power for charging devices.

[138]. In my opinion, a POSITA would have understood that including Quezada's USB port system in Emma's microwave auxiliary outlet system would have yielded a reasonable expectation of success, including providing for the charging of electronic devices such as cell phones. A POSITA would

have understood, for example, that Quezada's AC/DC and USB port system could be substituted into any device utilizing a standard electrical outlet, including a microwave oven as taught by Emma. Furthermore, Emma provides for the Withhold and Deliver of Electrical Power to Emma's auxiliary outlets via Emma's Control Circuit. A POSITA would have known that replacing the auxiliary (120 VAC) outlet of EMMA with the USB port receptacle taught in Quezada, would yield a revised configuration of Emma that functioned in exactly the same way – i.e., when power was withdrawn from the Quezada outlet, its 5-V output would cease and no power would be supplied by the USB port. This familiar result is reached by the simple replacement of Emma's auxiliary outlet with the USB port receptacle of Quezada. So long as a power circuit is connected to the device, such as Emma's power-control circuit, Quezada's system will work as intended to supply AC power to an auxiliary port and DC power to a USB port. In other words, Quezada's system functions as expected when receiving power regardless of its location, whether it is a wall mounted electrical box or a microwave mounted outlet, as taught by Emma. A POSITA would also have understood that a microwave is a commercially sold appliance, and it would be desirable to not only have auxiliary outlets to power small devices as taught by Emma, but also to have USB ports for charging as taught by

Quezada, particularly when USB charging had become widespread at the time of the invention.

[139]. Moreover, all the claimed elements were known in the prior art, and a POSITA would have combined the elements as disclosed by known methods for the purposes of providing Quezada's USB port charging system to Emma's microwave. Such a combination would have yielded nothing more than predictable results to one of ordinary skill in the art. Any inclusion of Quezada's USB port system into Emma would result in such elements merely performing the same function as they do separately, i.e., converting AC to DC for USB port charging. A POSITA would have recognized that the results of said combination were predictable because, while Quezada teaches the USB port system in a wall mounted configuration, its location is irrelevant to its electrical function. So long as the system receives power, it will function as intended, i.e., charge small electronic devices.

[140]. Lastly, a POSITA would have found the asserted combinations "obvious to try." By the time of the claimed invention, USB ports had become prolific for the charging of small electronic devices. A POSITA would have known about USB at the time of the invention and would have tried Quezada's system on Emma's microwave, because it is a desirable way to charge small devices. This would have been especially true given the

smaller size of USB ports compared to AC outlets, and the proliferation of USB cables as provided by distributors of small electronic devices.

6. All of the Claims are Indefinite ("operative connection with the cooking area")

[140.1] I understand that "a patent is invalid for indefiniteness if its claims, read in light of the specification delineating the patent, and the prosecution history, fail to inform, with reasonable certainty, those skilled in the art about the scope of the invention." Nautilus, Inc. v. Biosig Instruments, Inc., 572 U.S. 898, 901 (2014); 35 U.S.C.§112, ¶2.

[140.2] In my opinion, '745 claims 1-28 are invalid as being indefinite. Independent Claims 1 and 24 recite "a smoke sensor… in operative connection with a cooking area inside the microwave oven…" and Independent Claim 15 recites "a smoke sensor…in operative connection with the cooking area…" Ex. 1001 '745 patent. Those claims are indefinite because a POSITA cannot determine with reasonable certainty the scope of those claim limitations.

[140.3] Specifically, the claim language does not provide any indication of what it means for a smoke sensor to be in "operative connection" with an area. It is unclear whether the connection is such that the smoke sensor somehow operates in the area or the smoke sensor operates based on being connected to

the area. While the specification shows circuit diagrams having hardware and logic in operative electrical or operative logical connection, it does not provide any guidance on the meaning of the term "operative connection with the cooking area." Furthermore, while the specification provides certain specific examples of a safety sensor being positioned, e.g., "in the microwave cavity 332 adjacent air exhaust vents 338, 340 of the microwave, which comprises an air passage that connects an area where food is cooked in the microwave oven to the air outside the housing of the microwave oven." Ex. 1001 at 16:27-30. But the claims are not so limited – a POSITA would have to guess as to what "operative connection" means in the context of the claims as written.

VII. OPINIONS ON INVALIDITY OF THE '746 PATENT

A. The prior art references teach all the elements of the '746 Challenged Claims

[141]. In my opinion, all of the features and elements of the '746 Challenged Claims were well known in the art as of the Effective Filing Date. In performing my analysis, I have considered and cited prior art to the '746 patent as a supplement to my Original Expert Declaration. The '746 Challenged Claims contain many of the same or similar limitations as those described in my Original Declaration with respect to the '206, '374 and '876 Patents. Accordingly, references are made to my Original Declaration and

additional opinions are provided to the extent clarification or context is beneficial.

1. The "Microwave Oven" Claims (Claims 1, 3, 6, 8, 11, 12, 15, 17, 19, 21, 22, 23 and 24)

[142]. Claim 1 recites: "a microwave oven wherein the microwave oven includes a magnetron, wherein the magnetron is configured to cook items in a cooking area within the microwave oven… at least one externally accessible electrical connector…"

[143]. Claim 3 recites: "…wherein the at least one electrical connector comprises an electric outlet configured to releasably receive a plug-in electrical connection therewith…"

[144]. Claim 6 recites: "…wherein the at least one electrical connector comprises an electric outlet configured to releasably receive a plug of a refrigerator in electrical connection therewith…"

[145]. Claim 8 recites: "…wherein the at least one electrical connector includes at least one of an electric outlet, [and a USB port] …"

[146].

[147]. Claim 11 recites: "…wherein the microwave oven includes a front side and a back side, wherein the front side includes a control panel, an opening and a movable door, wherein in an open position of the door, the cooking area is accessible from outside the microwave oven, . . . wherein the

at least one electrical connector includes an electric outlet on the back side…"

[148]. Claim 12 recites: "… wherein the microwave oven includes a front side and a back side, wherein the front side includes a control panel, an opening and a movable door, wherein in an open position of the door the cooking area is accessible from outside the microwave oven, . . .wherein the at least one electrical connector includes an electric outlet on the back side…"

[149]. Claim 15 recites: "a microwave oven, wherein the microwave oven includes a cooking area within the microwave oven, a magnetron, wherein the magnetron is configured to cook items in the cooking area…"

[150]. Claim 17 recites: "…wherein the at least one electrical connector comprises an electric outlet configured to deliver household current and to releasably receive a plug-in electrical connection therewith…"

[151]. Claim 19 recites: "…wherein the at least one electrical connector comprises an electric outlet configured to deliver household current…"

[152]. Claim 21 recites: "…wherein the electrical connector includes an electric outlet . . ."

[153]. Claim 22 recites: "a microwave oven, wherein the microwave oven includes a cooking area within the microwave oven, a magnetron, wherein the magnetron is configured to cook items positioned in the cooking area…"

[154]. Claim 23 recites: "wherein the microwave oven further comprises at

least one externally accessible electrical connector…"

[155]. Claim 24 recites: "…at least one externally accessible electrical outlet…"

[156]. The '746 Microwave Oven Claims are structurally similar; hence I will discuss them together here. The distinctions between these claims do not substantively change my conclusions regarding the invalidity of the claims. The teachings of most of these elements are explicitly described in my Original Declaration at least at ¶¶[284-85][6] and are incorporated by reference into this section. Accordingly, references are made to my Original Declaration and additional opinions are provided below to the extent clarification or context is beneficial.

a. ***Microwave Oven***

i. <u>*Emma*</u>

[157]. Emma discloses an appliance with a microwave oven that has an interior cooking area: "A system of linked appliances comprising: a microwave oven connected to a source of power." *See, e.g.*, Ex. 1011 at Claim 1. As shown below in Emma Figure 2, the microwave oven 2 is connected to power source 5 (pink), which is depicted as a standard

[6] References to my Original Declaration may further cross reference other sections of my Original Declaration, in which case, those cross references are also incorporated by reference.

household outlet. *Id.*, ¶[0026]; Ex. 1002 ¶¶[138-39, 285].

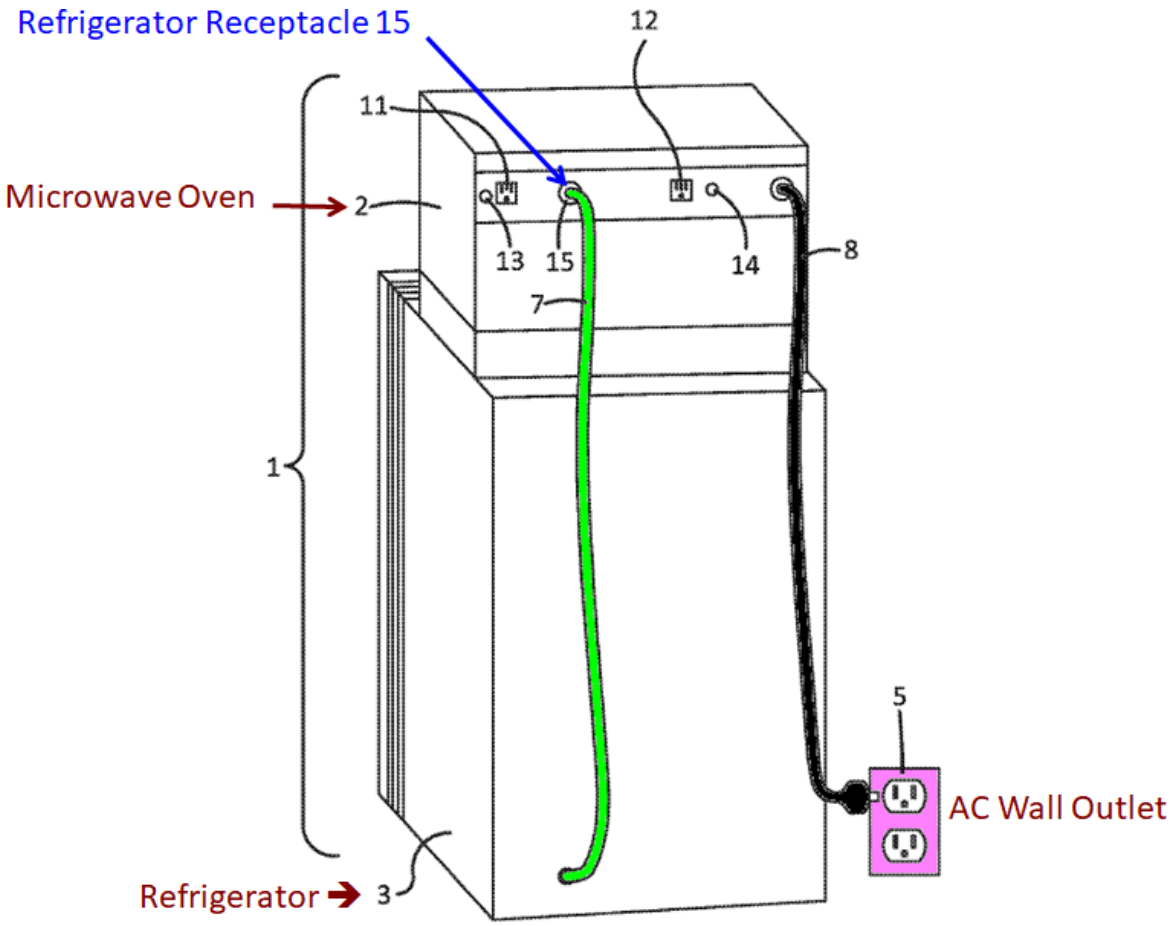

FIGURE 2

Ex. 1002, Fig. 2 (annotated)

[158]. The microwave includes an external refrigerator receptacle 15 at the rear of the microwave which is connectable to a plug via wire 7 (green). Ex. 1011 ¶¶[0026, 0032]. The refrigerator receptacle 15 is depicted in FIG. 4 as being a standard household outlet for releasably receiving a matching plug.

[159]. As shown in the block diagram of Figure 4 (reproduced below),

externally accessible refrigerator receptable 15 [pink] is connected through relay 20 (orange) to power source 5, the standard household outlet (pink). *Id.* at Fig. 4. Accordingly, the refrigerator receptacle 15 is configured to deliver household current from the power source 5. Ex. 1011¶[0032].

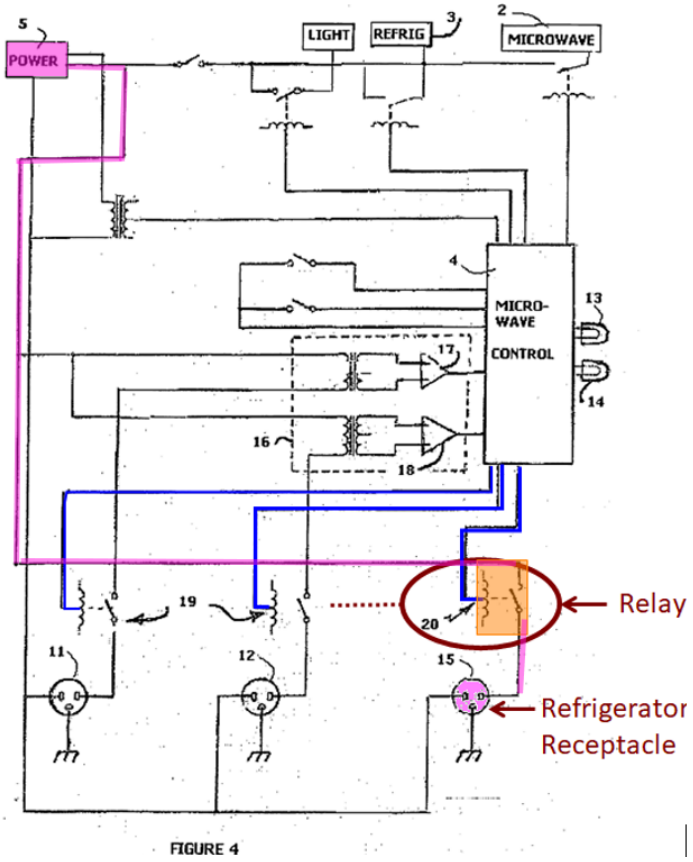

Id. at Fig. 4 (annotated).

[160]. Additionally, as shown in Fig. 1 below, Emma discloses a front side that has a control panel and a back side, where on the front side, the cooking area is accessible from the outside by way of a movable door. Emma states as follows: "The appliances (microwave and refrigerator) may be of standard

design with features commonly available. The internal components of the appliances are well known and do not need to be described herein." *Id*. Furthermore, the microwave also includes a magnetron configured to cook items in the cooking area. Ex. 1011 ¶¶[0008, 0010, 0011], Fig. 10.

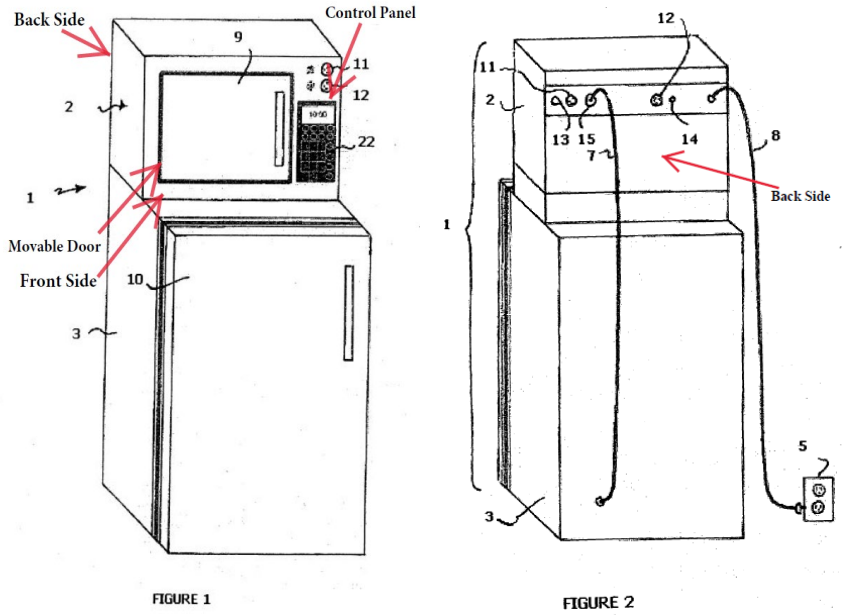

Id., Fig. 1 (annotated).

2. <u>The "Control Circuit" Claims (Claims 1, 7, 8, 11, 12, 15, 22, 23 and 24)</u>

[161]. Claim 1 recites: "a power cord, wherein the power cord is configured to be releasably connected to a source of electrical power, . . . wherein each electrical connector is configured to deliver electrical power that is received through the power cord through the respective electrical connector to a respective electrically powered device that is outside of the microwave oven, at least one power control circuit, wherein the at least one power control circuit is in operative electrical connection with each of the power cord, the at

least one electrical connector, the magnetron, and the smoke sensor …"

[162]. Claim 7, 8, 11 and 12 recite: "…wherein the power cord comprises a single power cord…"

[163]. Claim 15 recites: "wherein each electrical connector is configured to deliver electrical power from the microwave oven… at least one power control circuit, wherein the at least one power control circuit is in operative electrical connection with the magnetron, the at least one smoke sensor, and the at least one electrical connector…"

[164]. Claim 22 recites: "at least one power control circuit, wherein the at least one power control circuit is in operative connection with each of the magnetron and the at least one smoke sensor,"

[165]. Claim 23 recites: ". . .wherein each electrical connector is configured to deliver electrical power from the microwave oven through the respective electrical connector, wherein the at least one electrical connector is in operative connection with the at least one power control circuit…"

[166]. Claim 24 recites: ". . . wherein the electrical outlet is in operative connection with the at least one power control circuit…"

[167]. The '746 Control Circuit Claims are structurally similar and are discussed together. The distinctions between them do not substantively change my conclusions regarding the invalidity of the claims. The teachings

of most of these elements are explicitly described in my Original Declaration, at least at ¶[283] and are incorporated by reference into this section. Accordingly, references are made to my Original Declaration and additional opinions are provided below to the extent clarification or context is beneficial.

a. ***Control Circuit***

i. *Emma*

[168]. As shown in FIG. 10, reproduced below, Emma discloses a microwave / magnetron with a controller 104 (yellow) in operative connection with the magnetron and electrical connector (refrigerator outlet 115, green).

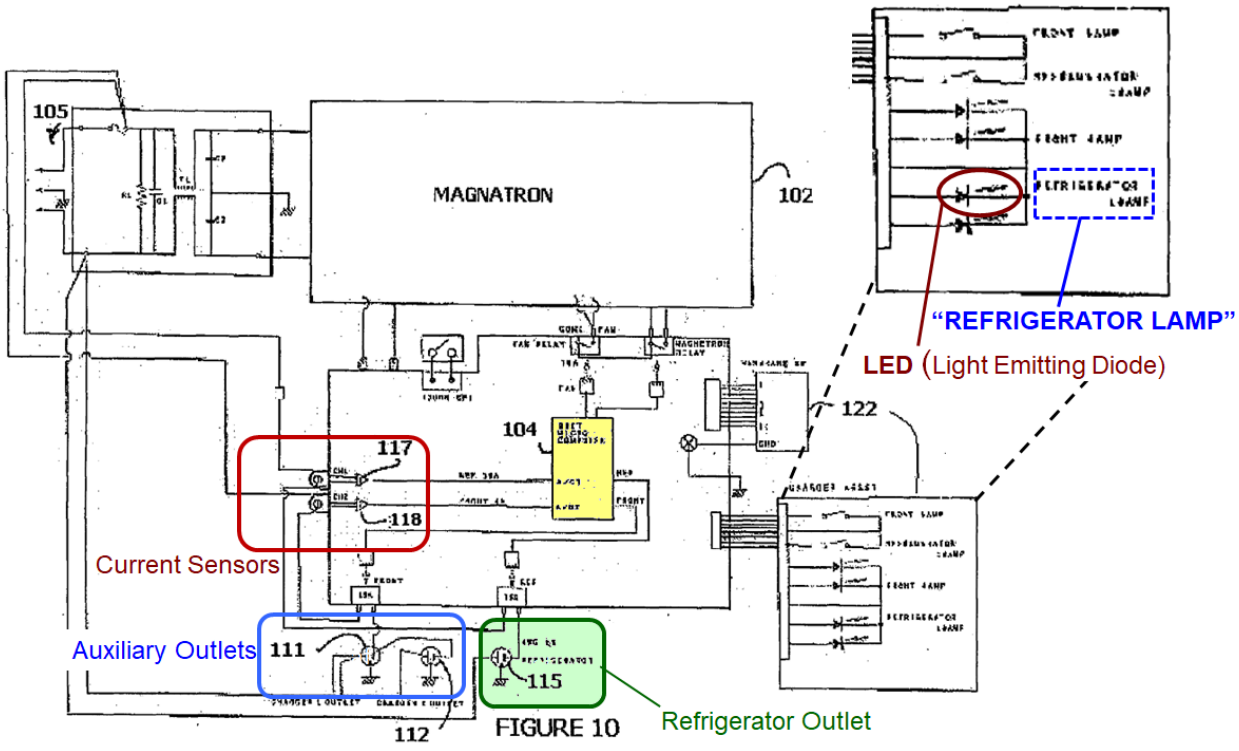

Ex. 1011, Fig. 10 (annotated).

[169]. As shown in Figure 2 (reproduced below), Emma discloses a microwave oven (which includes the magnetron) and refrigerator

combination, with both appliances being powered only though a single power cord 8 (black) that is releasably connectable to a power outlet 5 (pink): a "single cord 8, provides input power to the system 1 from receptacle 5 through microwave 2." *Id.*, ¶¶[0008, 0026]. The microwave includes a refrigerator receptacle 15 (i.e., "electrical connector") at the rear of the microwave oven which is connectable to a plug via cord 7. Ex. 1011 ¶¶[0026, 0032]. The "refrigerator receptacle 15 [is] accessible at the rear of the microwave oven," *Id*., ¶[0032].

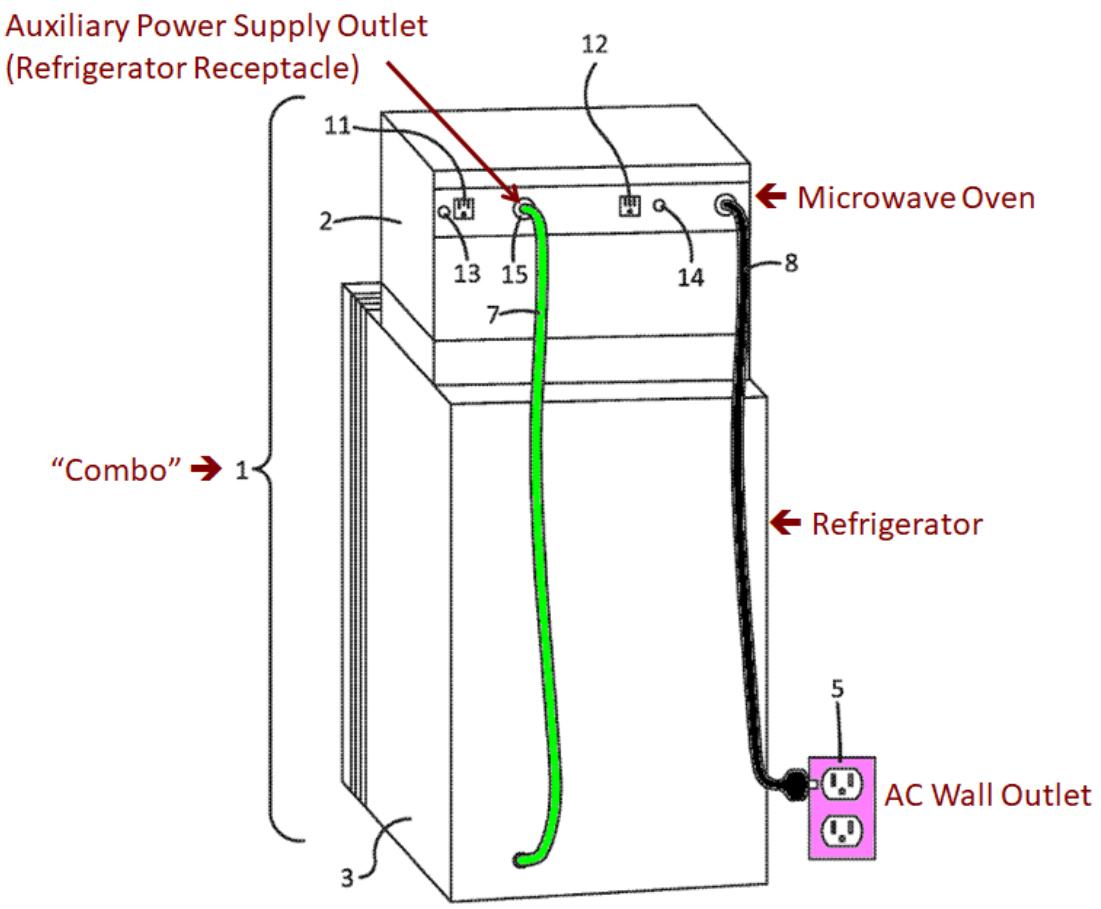

FIGURE 2

Id. Fig. 2 (annotated).

[170]. Additionally, Emma Figure 3 (reproduced below) contains a hierarchical block diagram of the system, specifically, the microprocessor (i.e., "at least one power control circuit") and its distribution of power to the device made possible by power from the power supply, through the single power cord 8.

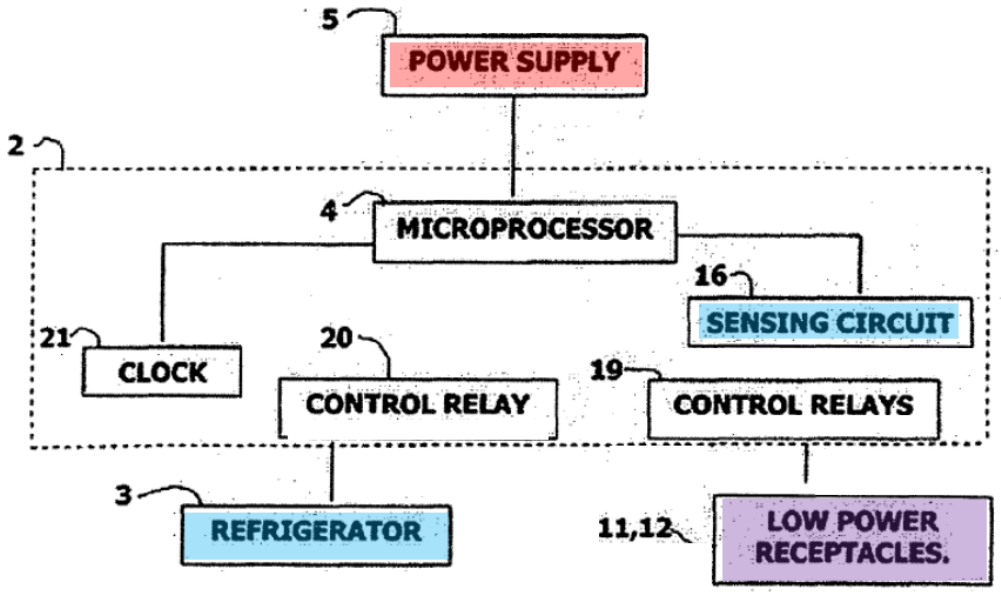

FIGURE 3

Id. Fig. 3 (annotated).

[171]. Emma further discloses a microprocessor-based control circuit (i.e., "at least one power control circuit") installed in the microwave oven which is in operative connection with the microwave oven / magnetron and refrigerator receptacle (i.e., "wherein each electrical connector is configured to deliver electrical power from the microwave oven through the respective electrical connector…").

[172]. As shown in the diagram below, which depicts the control circuit (Figure 4), Emma discloses input power to the system from receptacle 5, a control circuit providing for digitally operating relays 19, 20 for controlling electrically powered devices outside the microwave through the low power

auxiliary outlets 11, 12, and refrigerator receptacle 15. (i.e., "the electrical connector, is in operative electrical connection with the at least one power control circuit"). Ex. 1011 ¶[0027].

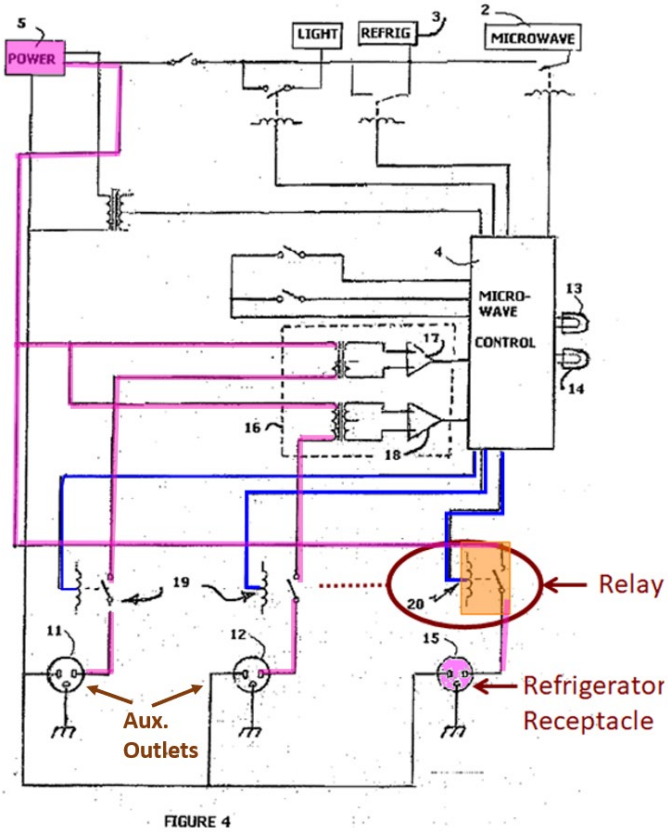

Id. Fig. 4 (annotated).

ii. *ISDU*

[173]. As shown in ISDU, the smoke detection unit (i.e., "Smoke Sensor") is in operative electrical connection with the circuit (i.e., "at least one power control circuit"). As explained by ISDU, the integrated smoke detection unit interfaces with the microwave logic to control shutting down and alerting the user: "Once smoke is detected, we will send a signal that lets a circuit

interrupt the power to the microwave through the use of a 'soft' power-off function already in use by the microwave logic. This will stop the microwave while simultaneously sounding an alarm." Ex. 1012 at 6. In addition, the alarm state includes "a suspension of normal microwave functions including the cessation of magnetron operation, a visual alert to be displayed on the integrated microwave LCD, and an audible alert." ISDU at 8.

iii. *Smith*

[174]. Referring to FIG. 4 (below), Smith discloses that the microwave microprocessor 64 (i.e., "at least one power control circuit") is in operative electrical connection with a gas sensor 52 (i.e., "Smoke Sensor", blue) and the microwave magnetron 40 (yellow):

> gas sensor 52 is incorporated in a microprocessor-based control arrangement . . . . The circuit of FIG. 4 includes a gas sensing circuit 60 for sensing the concentration level of gases in the circulating air as it exits cooking cavity 24 and generating a voltage signal having a magnitude representative of the sensed gas concentration level…
> Ex. 1014. at 4:61- 5:19.

[175]. Additionally, as further notated in Figure 4 below, microcontroller 64 is in operative electrical connection to magnetron 40 through relay 68 (green) which is buffered by relay driver 136 (turquoise), and/or control TRIAC 140 via optocoupler 143.

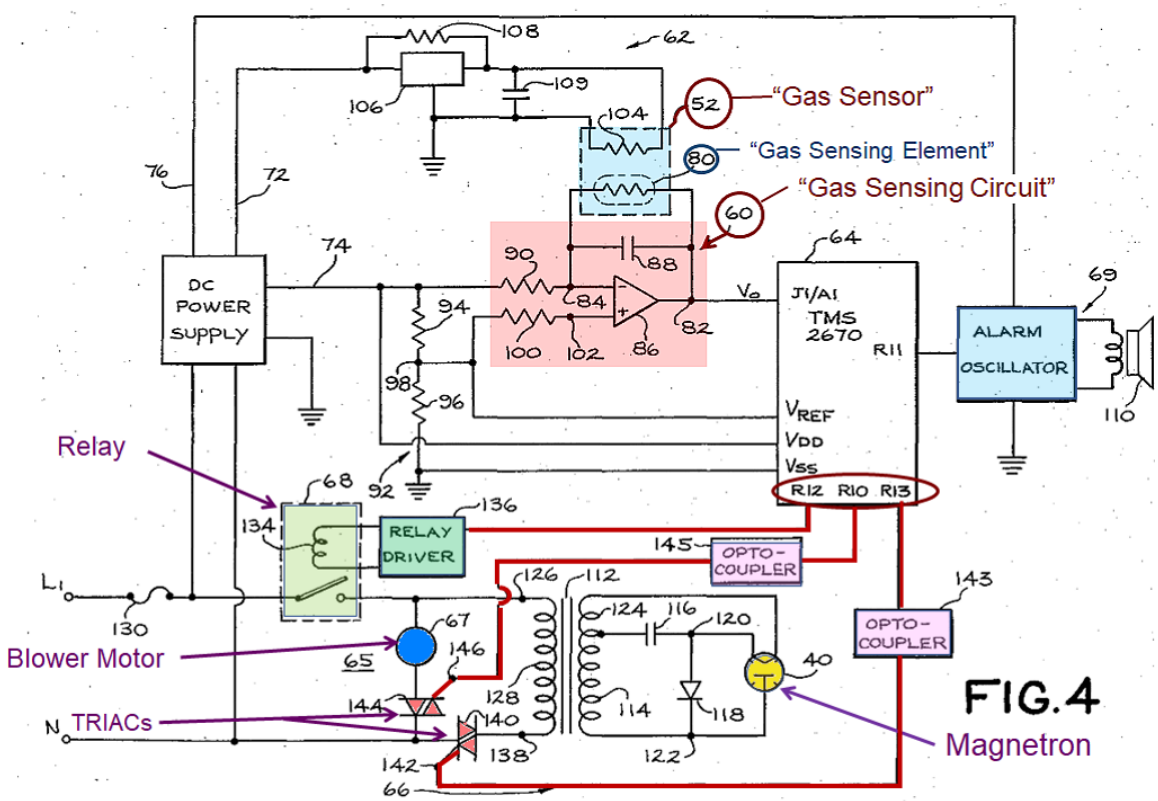

Id. at Fig. 4 (annotated).

iv. *Butt*

[176]. Butt teaches a controller 20 configured to control the operation of a kitchen appliance (i.e., "at least one power control circuit") that is in operative electrical connection to a smoke detector (i.e., "Smoke Sensor"), a relay 44 for controlling power to an externally accessible electrical appliance outlet, and a source of electrical power "A". The device taught in Butt is configured to supply or cut power to the appliance coupled to the controller: "The microcontroller 36 is programmed with firmware that operates according to the flowchart of FIG. 7 [reproduced below]." Ex. 1015 at 5:44-51; *see also*

id. at Figs. 2-3.

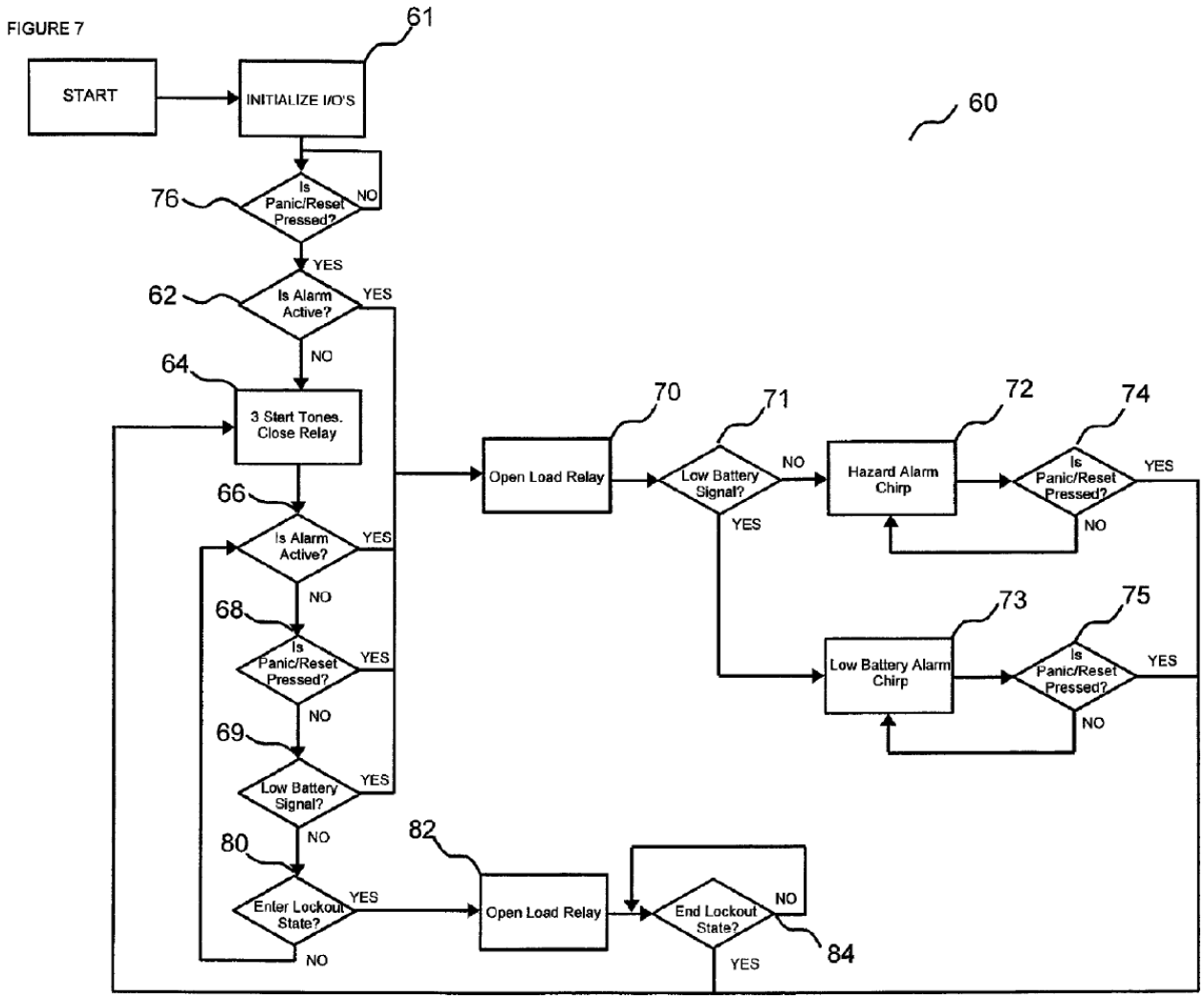

Id., Fig. 7.

[177]. As shown in Fig 6. below, Butt discloses an appliance coupled to the "controller 20 [which] is coupled to a cord 50 one end of which is to be inserted into a standard power outlet." Ex. 1015 at 6:21-22.

Figure 6

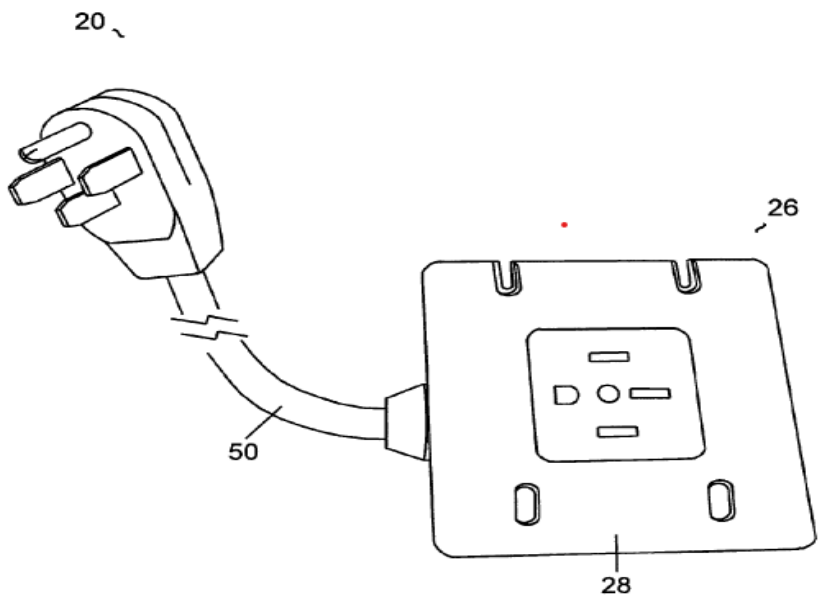

Ex. 1015, Fig.6.

[178]. Further, the controller 20 (housed within circuit box 26) is in operative electrical connection to detector 14 and the externally accessible electrical appliance outlet.

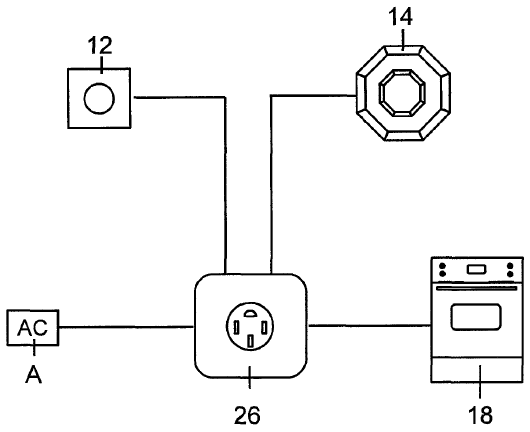

Id. Fig. 1B; 5:1-3.

3. The "Withhold and Deliver Electrical Power" Claims (Claims 2, 3, 4, 6, 8, 9, 12, 13, 14, 16, 19, 21, 23 and 24)

[179]. Claim 2 recites: "…wherein the at least one power control circuit is operative to cause electrical power to be unavailable to the at least one electrical connector during at least a portion of the time that the magnetron is operative…"

[180]. Claim 3 and 6 recite: "…wherein the at least one power control circuit is operative to cause electrical power to be unavailable to the electric outlet during at least a portion of the time that the magnetron is operative…"

[181]. Claim 4 recites: "…wherein the at least one power control circuit is operative to cause electrical power to be unavailable to the USB port during at least a portion of the time that the magnetron is operative…"

[182]. Claim 8 recites: "…wherein the at least one power control circuit is operative to cause electrical power to be unavailable to the USB port during at least a portion of the time that the magnetron is operative…"

[183]. Claim 9 recites: "…wherein the at least one power control circuit is operative to cause electrical power to be unavailable to the at least one electrical connector during at least a portion of the time that the magnetron is operative, and for a predetermined time period after electrical power becomes unavailable to the at least one electrical connector…"

[184]. Claim 12 recites: "…power control circuit is operative to cause electrical power to be unavailable to at least one of the electric outlet and the USB port during at least a portion of the time that the magnetron is operative…"

[185]. Claim 13 recites: "…wherein the at least one power control circuit is operative to cause electrical power to be unavailable to the refrigerator during at least a portion of the time that the magnetron is operative…"

[186]. Claim 14 recites: "…wherein the at least one power control circuit is operative to cause electrical power to be unavailable to the at least one electrical connector while the magnetron is operative and for at least a preset minimum period after the magnetron becomes inoperative…"

[187]. Claim 16 and 23 recite: "…wherein the at least one power control circuit is operative to cause power to be unavailable from the at least one electrical connector when cooking power is delivered to the magnetron…"

[188]. Claim 19 recites "…wherein the at least one power control circuit is operative to cause electrical power to not be deliverable from each of the electric outlet and the USB port when cooking power is delivered to the magnetron…"

[189]. Claim 21 recites: "…wherein the at least one power control circuit is operative to cause electrical power to be unavailable from the electric outlet

while cooking power is delivered to the magnetron and for a period of time thereafter…"

[190]. Claim 24 recites: "…wherein the at least one power control circuit is operative to cause electrical power to be unavailable from the electrical outlet when cooking power is being delivered to the magnetron and for a period of time after cooking power is no longer delivered to the magnetron…"

[191]. The '746 Withhold and Deliver Electrical Power claims are structurally similar and are discussed together. The distinctions between them do not substantively change my conclusions regarding the invalidity of the claims. The teachings of most of these elements are explicitly described in my Original Declaration at least at ¶[283] and are incorporated by reference into this section. Accordingly, references are made to my Original Declaration, and additional opinions are provided below to the extent clarification or context is beneficial.

a. ***Withhold and Deliver Electrical Power***

i. *Emma*

[192]. Emma discloses a microprocessor (i.e., "at least one power control circuit") that is operative to cause electrical power to be unavailable to the refrigerator through the refrigerator receptacle (i.e., "electrical connector") and/or the auxiliary lower power receptacles when the magnetron draws

cooking power, i.e., when the microwave is in use. For example, Emma recites "the power to the auxiliary outlets is disabled by the microwave controller when the microwave magnetron is energized or whenever the current to the auxiliary outlets exceeds a preset value" and the control model is "dependent on the state of operation of the microwave magnetron." Ex. 1011 ¶¶[0010-0011]. Further Emma recites "wherein the algorithm causes the control processor to disable the refrigerator and the second power supply outlet, when the microwave demands power." Ex. 1011 at claim 1. Emma further recites: "[r]efrigerator 3 is generally subject to control by the microwave microprocessor controller 4 of the microwave oven 2." *Id.*, ¶[0026]. "Controller 4 may be programmed to manage the power to the components of the system to avoid overload conditions, while minimizing disruptions in the use of an individual appliance." *Id.*, ¶[0030]; Ex. 1002 ¶¶[203, 205, 289].

[193]. As shown in the diagram below of Emma's control circuit (Figure 4), Emma discloses a control circuit providing for digitally operating relays 19, 20 (circled in red) for controlling the low-power auxiliary outlets 11, 12, and refrigerator receptacle 15 (orange). Ex. 1011 ¶[0027].

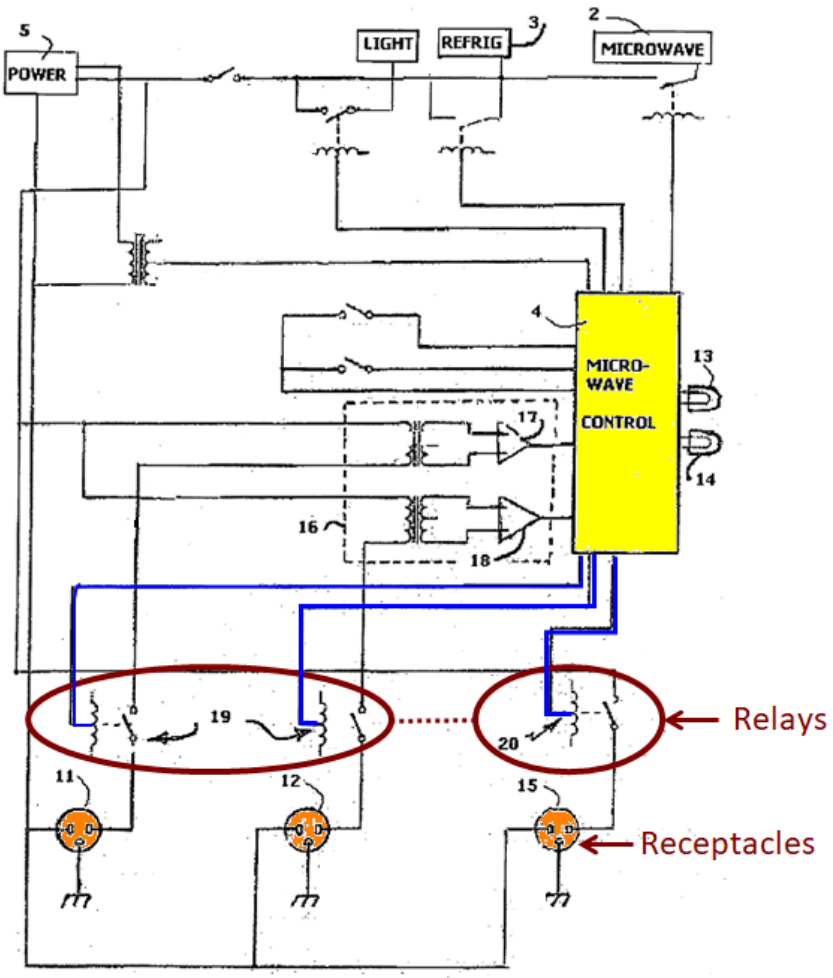

FIGURE 4

Ex. 1011, Fig. 4 (annotated)

[194]. For example, as shown in Figure 7 below, when the Microwave demands cooking power, it will first disable power to the Refrigerator (yellow) and the auxiliary outlets (blue) during cooking. This is because "priority is given to the power demands of the microwave oven." Ex. 1011 ¶[0038]. "Use of the [auxiliary] receptacles 11, 12, and [refrigerator

receptacle] 15 are, therefore, disabled during microwave operation."[7] *Id.*; Ex. 1002 ¶¶[203, 289]. Only after the refrigerator and auxiliary outlets have been disabled is microwave power enabled (red).

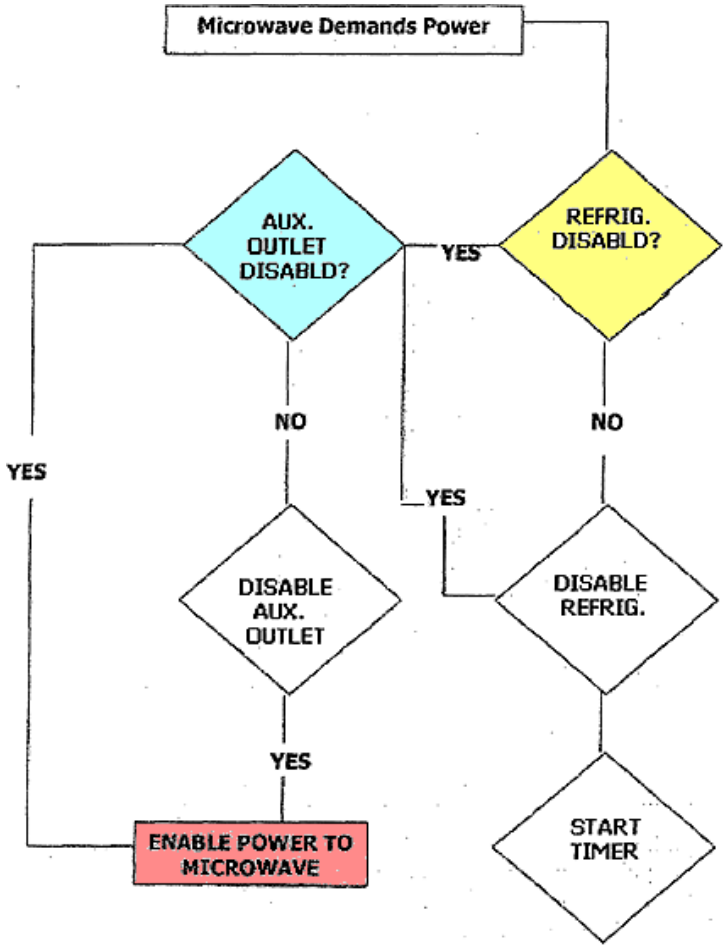

FIGURE 7

Ex. 1011, Fig. 7 (annotated).

[195]. As another example, Figure 6 (reproduced below) is a control logic flow for enabling power to the refrigerator/receptacle 15. If the refrigerator

[7] For additional reference, *see* Figure 2 in VI.C.1.a. ii. (A).

demands power (green; e.g., via its thermostat), the logic controller determines whether or not the microwave is on (red). If the microwave is *on*, the controller disables power to the refrigerator (blue):

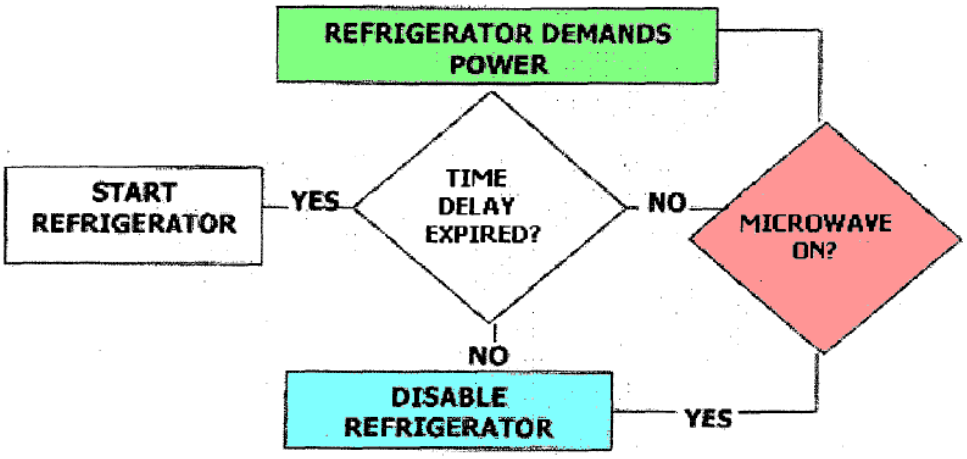

FIGURE 6

Ex. 1011 at Fig. 6 (annotated); Ex. 1002 ¶¶[206, 289].

[196]. Furthermore, to minimize rapid cycling of the Refrigerator and auxiliary outlets, Emma further discloses that: "[i]f the refrigerator 3 is under power when the microwave 2 is turned on, the power, to the refrigerator is turned off and clock 21 begins to count for a **predetermined period** during which the compressor of refrigerator 3 cannot be restarted." *Id*,. ¶[0033].

[197]. Accordingly, given that the cooking operation of a microwave of necessity requires that power be applied to its magnetron, Emma thus further teaches that electrical power will be unavailable to the refrigerator receptacle during magnetron operation, and also for a period of time after cooking power is not delivered to the magnetron:

> a clock device 21 could be used to provide timed delays during which, for example, refrigerator 3 would be prevented from undesirably rapid on/off cycles. When refrigerator 3 is disabled during microwave operation, a time delay of 3 minutes is provided during which refrigerator 3 will remain disabled, even if microwave use is only for a short period.

Id., ¶[0030] (emphasis added).

[198]. That is, Emma further teaches that the at least one electrical connector 15 used to power the refrigerator does not have electrical power for a preset minimum period of time and is unavailable even after the magnetron becomes inoperative.

[199]. Emma also discloses that the microprocessor is operative to enable power to the refrigerator, e.g., through the electrical connector 15, when the microwave is not in use. Ex. 1002 ¶¶[203-06, 289].

4. <u>The "Smoke Sensor" Claims (Claims 1, 15 and 22)</u>

[200]. Claim 1 recites: "…a smoke sensor, wherein the smoke sensor is positioned in operative connection with the cooking area…"

[201]. Claim 15 and 22 recite: "…at least one smoke sensor, wherein the smoke sensor is positioned in operative connection with the cooking area…"

[202]. The '746 Smoke Sensor Claims are structurally similar and discussed together. The distinctions between them do not substantively change my conclusions regarding the invalidity of the claims. The teaching of most of these elements is explicitly described in my Original Declaration at

least at ¶[283] and are incorporated by reference into this section. Accordingly, references are made to my Original Declaration, and additional opinions are provided below to the extent clarification or context is beneficial.

a. ***Smoke Sensor***

i. *ISDU*

[203]. ISDU discloses a smoke sensor positioned in operative connection with the cooking area inside the microwave oven. As shown in FIG 4 (below), the smoke detector (grey) is in operative connection with the microwave cooking area ("interior microwave compartment"; yellow) through a vent fan (blue). Ex. 1002 ¶¶[289-90].

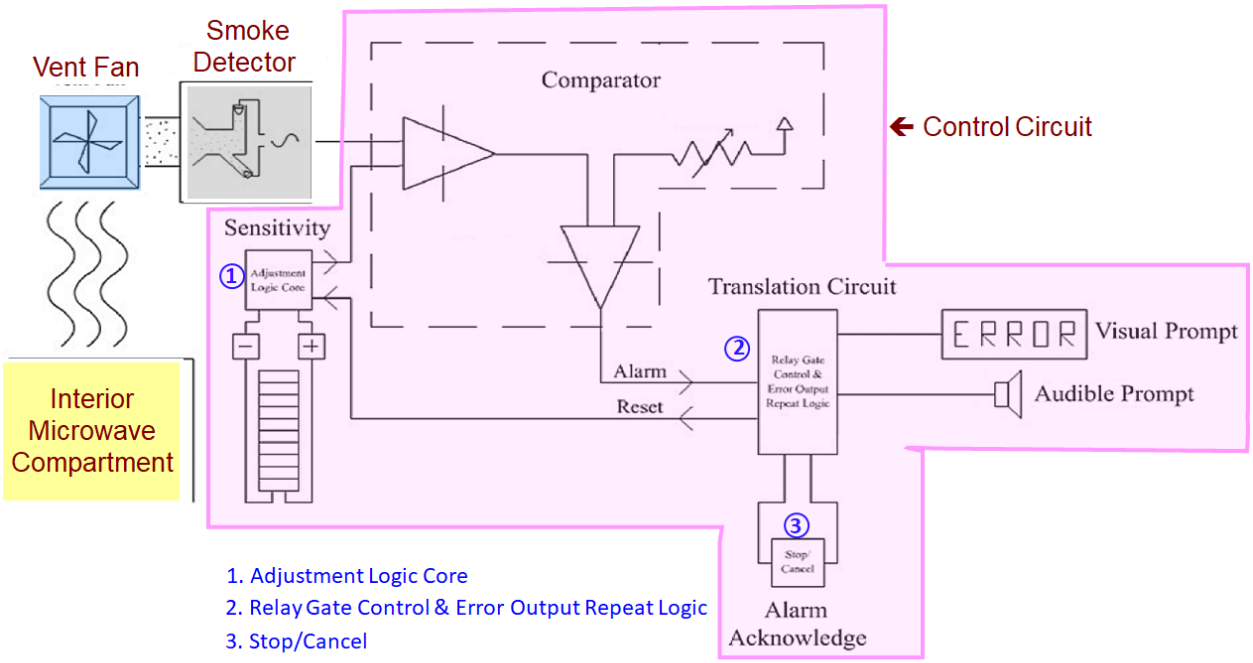

Figure 4

Ex. 1012, Fig. 4 (annotated).

[204]. The smoke detection unit is also in operative connection with the control circuit (i.e., "at least one power control circuit"). As explained in ISDU, the integrated smoke detection unit interfaces with the microwave logic to control shutting down the microwave and alerting the user: "Once smoke is detected, we will send a signal that lets a circuit interrupt the power to the microwave through the use of a 'soft' power-off function already in use by the microwave logic. This will stop the microwave while simultaneously sounding an alarm." Ex. 1012 at 6; Ex. 1002 ¶¶[99-100, 289].

ii. *Smith*

[205]. Smith discloses a gas sensor (i.e., "smoke sensor") positioned in operative connection with a cooking area inside a microwave oven. Smith describes the need to detect smoke and increasing gas concentration prior to combustion: "However, before actually reaching the ignition point, the food begins to char, smoke or smolder, resulting in a second period of relatively rapidly increasing gas concentration in the circulating air, comparable to that rate of increase which characterizes the normal cooking period." *Id.* at 3:51-54. Referring to Figures 1 and 2 below, which show the microwave oven from two different angles, Smith discloses a gas sensor 52 (i.e., "smoke sensor") positioned in operative connection with a cooking area ("cooking cavity"; yellow) inside the microwave oven:

> Means for sensing the concentration level of such gases in the air leaving the cavity is provided in the form of a gas sensor 52 disposed in the air flow path between perforations 48 in cavity wall 28 and vent openings 50 in cabinet wall 20. Sensor 52 is supported proximate perforations 48 by mounting bracket 54 which is suitably secured to cavity wall 28. Sensor 52 in the illustrative embodiment of FIG. 2 is a gas sensor readily commercially available from Figaro Engineering, Inc., identifiable as Model TGS No. [816][8].

Id. at 3:6-16; Ex. 1002 ¶¶[289-90].

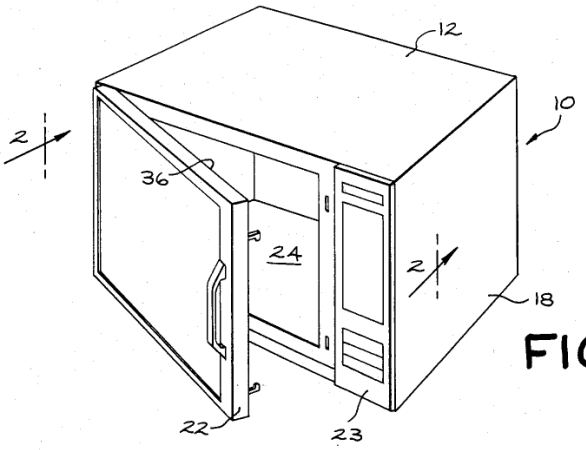

FIG.1

[8] Ex. 1002 ¶¶[167-169] (discussing typographical error).

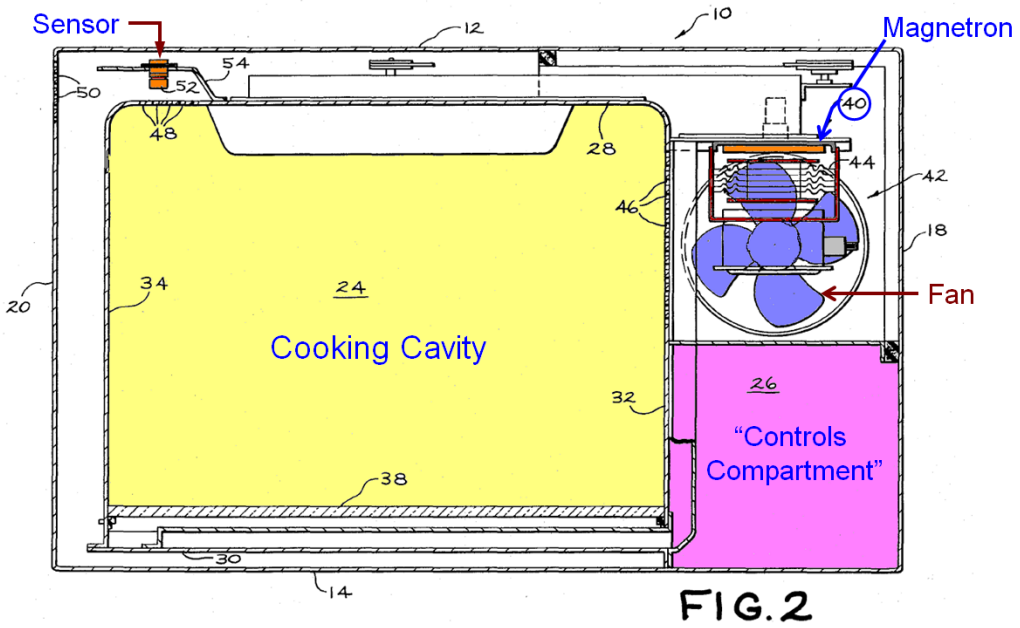

Ex. 1014, Figs. 1 and 2 (annotated)

[206]. Smith discloses the Model TGS No. 816 sensor from Figaro Engineering Inc. As discussed in my Original Declaration, the TGS 816 functions as a smoke sensor. Ex. 1002 ¶¶[167-69]. Additionally, referring to FIG. 4 (below), Smith discloses that the gas sensor (blue) is in operative connection with the microwave microprocessor (i.e., "control circuit"; yellow) via a "gas sensing circuit" signal interface (red):

> gas sensor 52 is incorporated in a microprocessor-based control arrangement . . . . The circuit of FIG. 4 includes a gas sensing circuit 60 for sensing the concentration level of gases in the circulating air as it exits cooking cavity 24 and generating a voltage signal having a magnitude representative of the sensed gas concentration level.

Ex. 1014 at 4:61-5:3; Ex. 1002 ¶¶[170, 289].

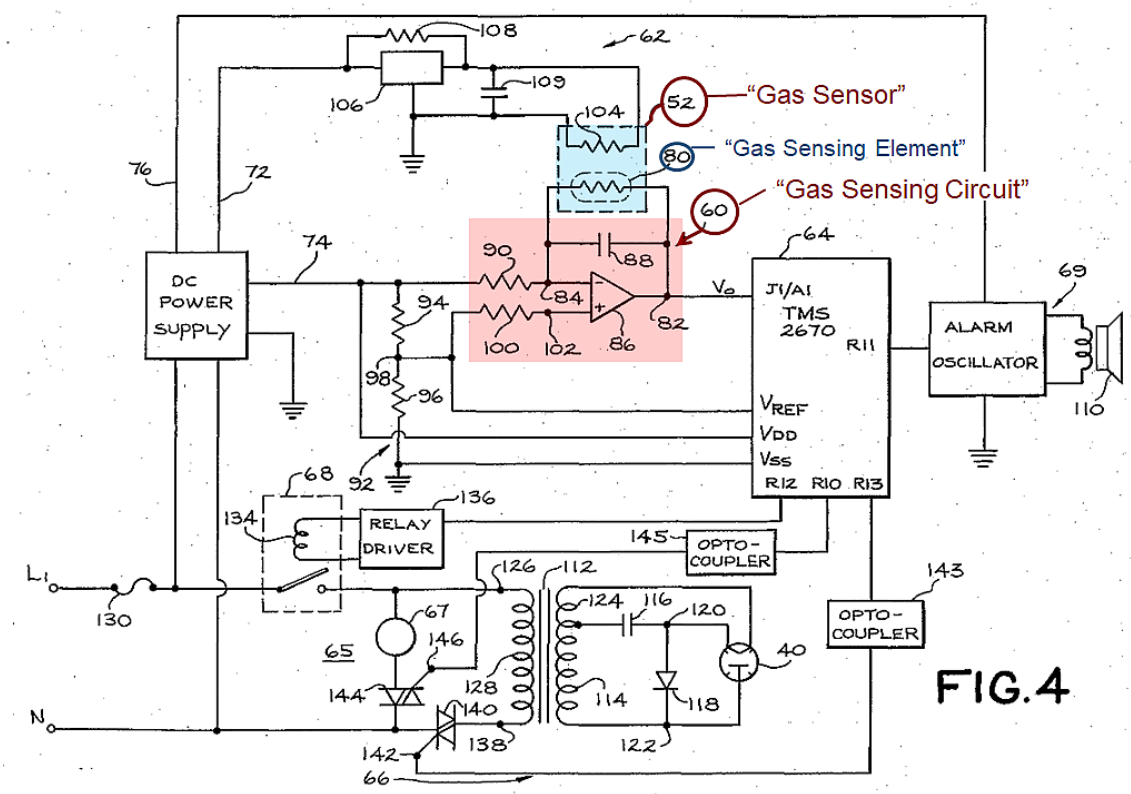

Ex. 1014, Fig. 4 (annotated).

iii. *Butt*

[207]. Butt addresses the problem of fires caused by kitchen appliances: "[t]he National Fire Protection Association reports that between the years 1999-2002, for example, there were 114,000 reported home fires associated with cooking alone." Ex. 1015 at 1:22-25. As shown in Figure 1A (reproduced below), the system taught by Butt controls power to an electrical kitchen appliance 18 coupled to a controller 20, where the Butt system includes a smoke detector 14 (blue), panic/reset button 12 (green) and a wireless transmitter. *Id.* at 4:29-34; Ex. 1002 ¶¶[171, 289]. Butt explains that the controller is housed inside circuit box 26 (grey): "…a standard circuit box

26 and a controller 20 housed therein…". Ex 1015 at 4:33-34.

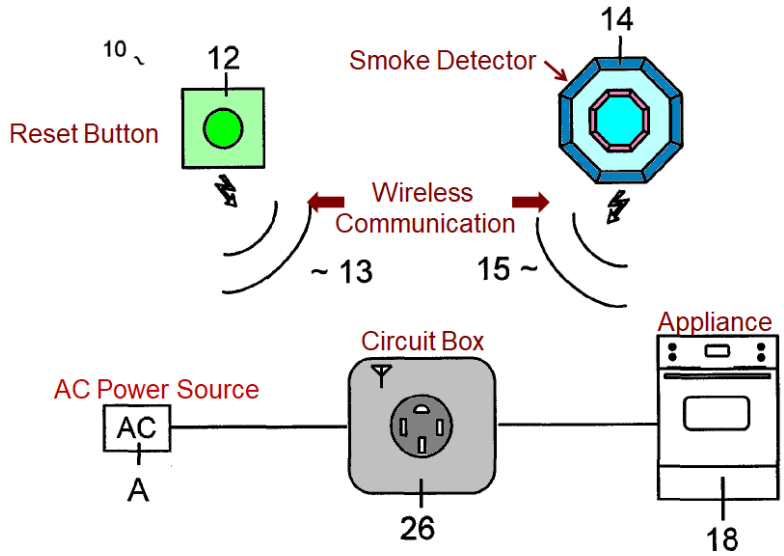

Ex. 1015 at Fig. 1A (annotated).

[208]. The system taught by Butt includes a smoke sensor in operative connection with the cooking area of a cooking range. Ex. 1015 at 2:22-25. Butt further teaches that a smoke detector is in operative connection to the controller (i.e., "at least one power control circuit"). If the detector detects smoke, then a signal is sent to the controller to interrupt power to the kitchen appliance:

> If the detector 14 detects the presence of smoke, then in the wireless embodiment illustrated in FIG. 1 an RF signal 15 is transmitted and is received by the controller 20.

Id. at 4:53-63; Ex. 1002 ¶¶[107, 172, 289].

[209]. "Further, in the embodiment shown in FIG. 1B [reproduced below], the controller 20, detector 14, and panic/reset button 12 are all wired

together." Id. at 5:3-4. "The wiring takes the place of the RF signals 13, 15 illustrated in FIG. 1A." Ex. 1015 at 5:3-4; Ex. 1002 ¶¶[173, 289].

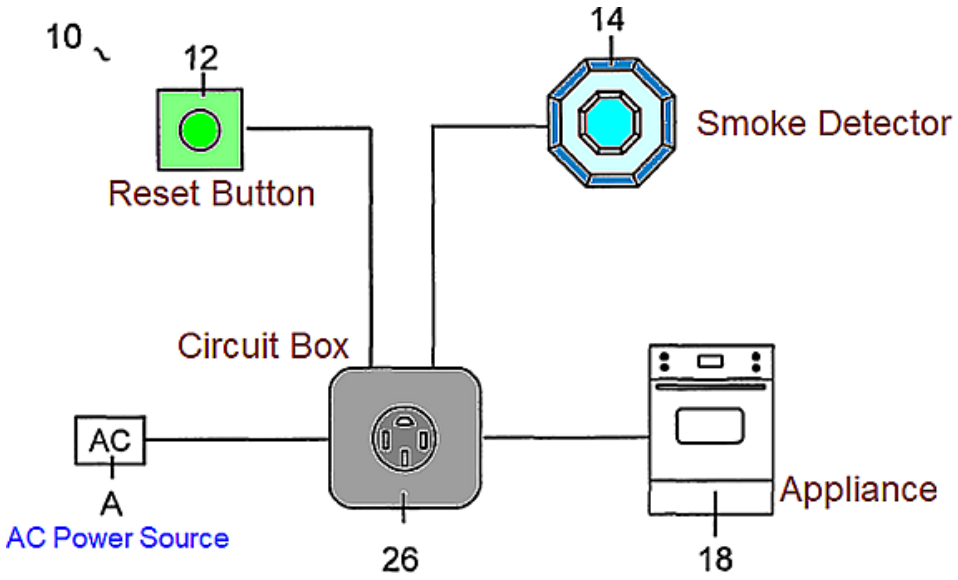

Ex. 1015 at Fig. 1B (annotated).

5. <u>The "Shut-Down Function" Claims (Claims 1, 10, 15 and 22)</u>

[210]. Claim 1 recites: "…wherein responsive at least in part to a level of smoke sensed by the smoke sensor, the at least one power control circuit is operative to cause cooking power to the magnetron to be withdrawn to end a current cooking session prior to a set end time of the current cooking session…"

[211]. Claim 10 recites: "…wherein the at least one power control circuit is operative to cause cooking power to the magnetron to be withdrawn to end the cooking session responsive at least in part to sensing the level of smoke continuously for a predetermined time…"

[212]. Claim 15 recites: "…wherein responsive at least in part to a level of smoke sensed by the at least one smoke sensor during a cooking session, the at least one power control circuit is operative to cause power to the magnetron to be withdrawn to end the cooking session prior to a set end time…"

[213]. Claim 22 recites: "…wherein the at least one power control circuit is operative to cause responsive at least in part to a level of smoke sensed by the at least one smoke sensor, cooking power being currently delivered to the magnetron to be withdrawn whereby a current cooking session is ended prior to a set end time…"

[214]. The '746 Shut-Down Function Claims are structurally similar and are discussed together. The distinctions between them do not substantively change my conclusions regarding the invalidity of the claims. The teachings of most of these elements are explicitly described in my Original Declaration at least at ¶[283] and are incorporated by reference into this section. Accordingly, references are made to my Original Declaration, and additional opinions are provided below to the extent that clarification or context is beneficial.

a. ***Shut-Down Function***

i. *ISDU*

[215]. ISDU discloses that when smoke is detected, the microwave oven

operation, i.e., magnetron, is disabled, and the user is alerted to the smoke:

> [W]hen smoke is detected during microwave operation, the device will temporarily disable microwave operation and let the user know that the food has begun to smoke or even burn… The product, Integrated Smoke Detection Unit (ISDU) for commercial microwave ovens, will work in the following way. The presence of particulate during cooking will trigger our device thus sounding an alarm and halting microwave operations.

Ex. 1012 at 1; Ex. 1002 ¶¶[174-75, 289].

> The alarm state will consist of a suspension of normal microwave functions including the cessation of magnetron operation, a visual alert to be displayed on the integrated microwave LCD, and an audible alert.

[ISDU at 8].

[216]. Additionally, in order to prevent false alarms for the user, ISDU discloses that power to the microwave can be withdrawn responsive to the smoke sensor outputting a signal for a predetermined amount of time to indicate the presence of unwanted smoke (i.e., "responsive at least in part to sensing the level of smoke continuously for a predetermined time.") and not a false alarm:

> Because a photoelectric detector is more prone to isolated particulate triggering, measures must be taken to ensure triggering only when an alarm is merited. To prevent such singular responses, the time averaged output signal from the smoke detector can be evaluated and used to output an alarm trigger only in the event of true danger to the user…. Time referencing this output pulse against a set of standard conditions will allow the evaluation of the signal to determine whether an alarm is necessary or not.

Ex. 1012 at 8 and 20.

ii. *Smith*

[217]. Smith discloses a gas sensor that can cause cooking power, i.e., power to the magnetron, to be withdrawn upon the gas sensor sensing smoke by the smoke sensor over time. Figure 5 (reproduced below) shows the control algorithm implemented by the microprocessor for smoke detection. Ex. 1002 ¶¶[180-81, 289]. Smith states:

> Upon detection of a rate of change greater than reference ΔL, (Yes to Inquiry 180) a signal is provided at output port R12 causing power control relay 68 to open, thereby deenergizing magnetron 40 and the blower motor 67 (Block 182). …The deenergizing of both the magnetron and the blower motor using either technique in effect turns off power to the oven. …. By detecting the occurrence of a rapid increase in the rate of change of concentration level by the hereinbefore described method, magnetron 40 is deenergized prior to the load being heated in the oven reaching its actual combustion temperature, thereby anticipating a potential fire condition and preventing the load from reaching its combustion point.

Ex. 1014 at 9:17-39.

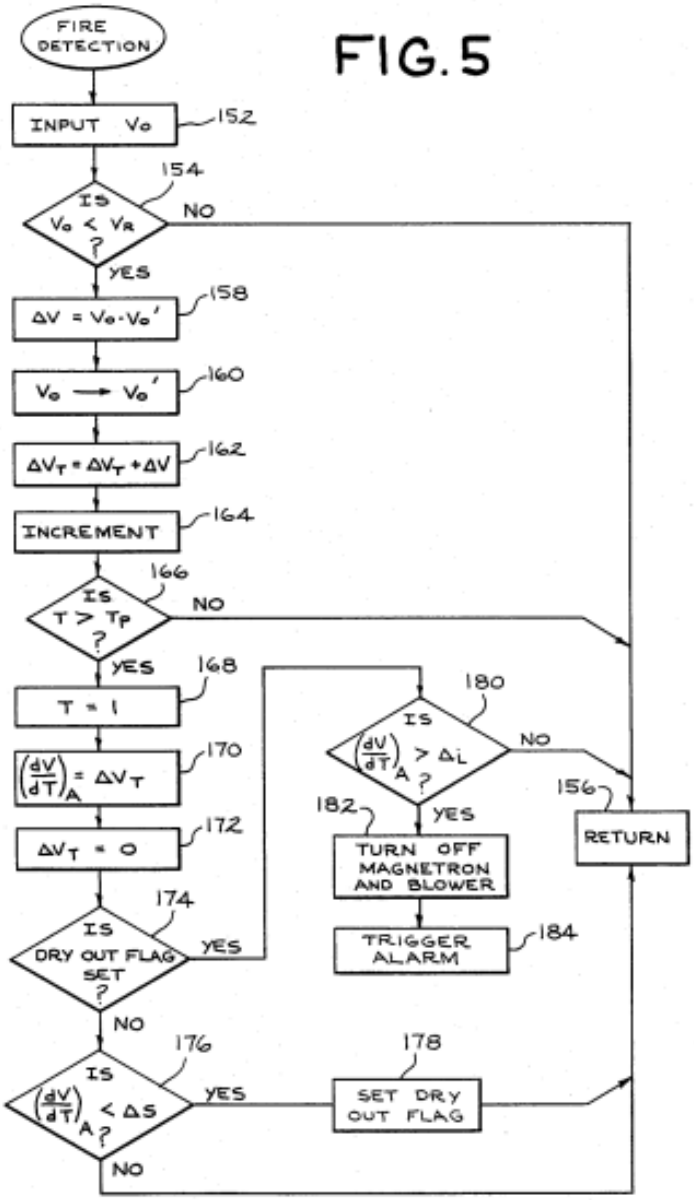

Id. at Fig. 5.

iii. <u>*Butt*</u>

[218]. As shown in FIG 1A (reproduced below), Butt teaches that if the detector (i.e., "smoke sensor") senses smoke and consequently interrupts power to the microwave, it will be stopping the microwave before the end time of the cooking session set by the user. For example, Butt teaches

sending a control signal to a relay to prevent the flow of electricity to the electrical cooking appliance:

> If the detector 14 detects the presence of smoke, then in the wireless embodiment illustrated in FIG. 1[A] [shown below] an RF signal 15 is transmitted and is received by the controller 20. Upon receiving the signal, ***the controller interrupts the AC power supply to the appliance 18 and consequently shuts the appliance 18 off***.

Id. at 4:53-67 (emphasis added); Ex. 1002 ¶¶[182, 184, 289].

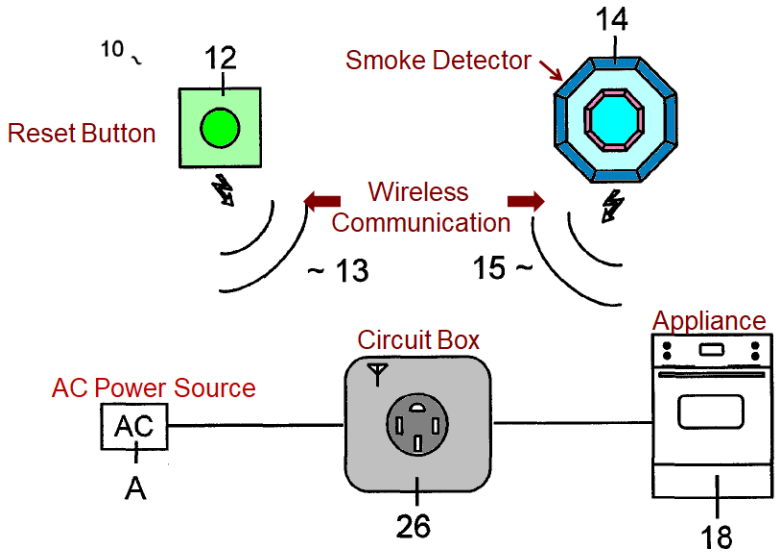

Id., Fig 1A (annotated).

[219]. Butt further describes that it was previously known to have a safety shut-off system to switch off an electrical appliance upon detecting a signal indicative of a fire: "a detector for detecting a signal indicative of fire, such as smoke; a switch that connects an appliance, such as an electric range, to an AC power supply; and a controller that opens the switch upon receiving a signal from the detector." Ex 1015 at 1:34-36; Ex. 1002 ¶¶[183, 185, 289].

6. The "Reset Enable Function" Claims (Claims 1, 15 and 22)

[220]. Claim 1 recites: "…wherein after the current cooking session has been caused to end prior to the set end time based on the sensed level of smoke, the at least one power control circuit is operative thereafter to enable the magnetron to receive cooking power in a next subsequent cooking session…."

[221]. Claim 15 recites: "…wherein after the cooking session has been caused to end based on the sensed level of smoke, the at least one power control circuit is operative thereafter to enable the magnetron to receive power to commence a next subsequent cooking session…"

[222]. Claim 22 recites: "…wherein the at least one power control circuit is operative to cause …after the current cooking session has been caused to end prior to the set end time based on the sensed level of smoke, cooking power to be delivered to the magnetron to commence a next subsequent cooking session…"

[223]. The '746 Reset Enable Function claims are structurally similar and are discussed together. The distinctions between them do not substantively change my conclusions regarding the invalidity of the claims. The teachings of most of these elements are explicitly described in my Original Declaration at least at ¶[283] and are incorporated by reference into this section.

Accordingly, references are made to my Original Declaration and additional opinions are provided below to the extent clarification or context is beneficial.

a. ***Reset Enable Function***

i. *ISDU*

[224]. ISDU discloses a control circuit (i.e., "at least one power control circuit") operative to enable the microwave / magnetron after ending the cooking session due to the Shut Down Function:

> Triggering the smoke detector will output a number of alarm conditions to alert the user. The alarm state will consist of a suspension of normal microwave functions including the cessation of magnetron operation, a visual alert to be displayed on the integrated microwave LCD, and an audible alert. . . . ***Acknowledgement of the alarm state will reinstate all normal microwave functions and reset the smoke detector circuit for further use***.

Ex. 1012 at 8-9 (emphasis added).

[225]. As shown above, ISDU discloses that the power control circuit enables the microwave oven, including its magnetron, to receive cooking power to commence a subsequent cooking session to enable further cooking. *Id.*; Ex. 1002 ¶¶[186-87, 283, 289]. ISDU equates suspension of microwave operation with cessation of magnetron operation. Ex. 1012 at 8.

ii. *Butt*

[226]. Butt teaches that a user may press the panic/reset button to enable the controller to restore power to the appliance: "when the danger posed by

the fire has passed, a user can press the panic/reset button 12, which will transmit an RF signal 13 to the controller 20, and the controller 20 will restore the AC power supply to the appliance 18." Ex. 1015 at 3:63-67; Ex. 1002 ¶¶[192, 289].

[227]. As shown in FIG 7 (reproduced below), when the panic/reset button is pushed, the device is re-enabled:

> The relay 44 remains open until the panic/reset button 12 is pressed (block 74), following which the microcontroller 36 closes the relay 44 . . .

Ex. 1015 at 7:15-21; Ex. 1002 ¶¶[195, 289].

[228]. Relay 44 operates to remove or provide power to the appliance: "If pursuant to the algorithm implemented in the firmware, power should be restored to the appliance 18, the appropriate signal is sent to relay driver 42, which consequently closes the relay 44 and restores power." Ex.1015 at 5:51-54. "When the lockout state is over, the relay 44 is closed and power is restored to the appliance 18 (block 64)." Ex. 1015 at 7:60-62.

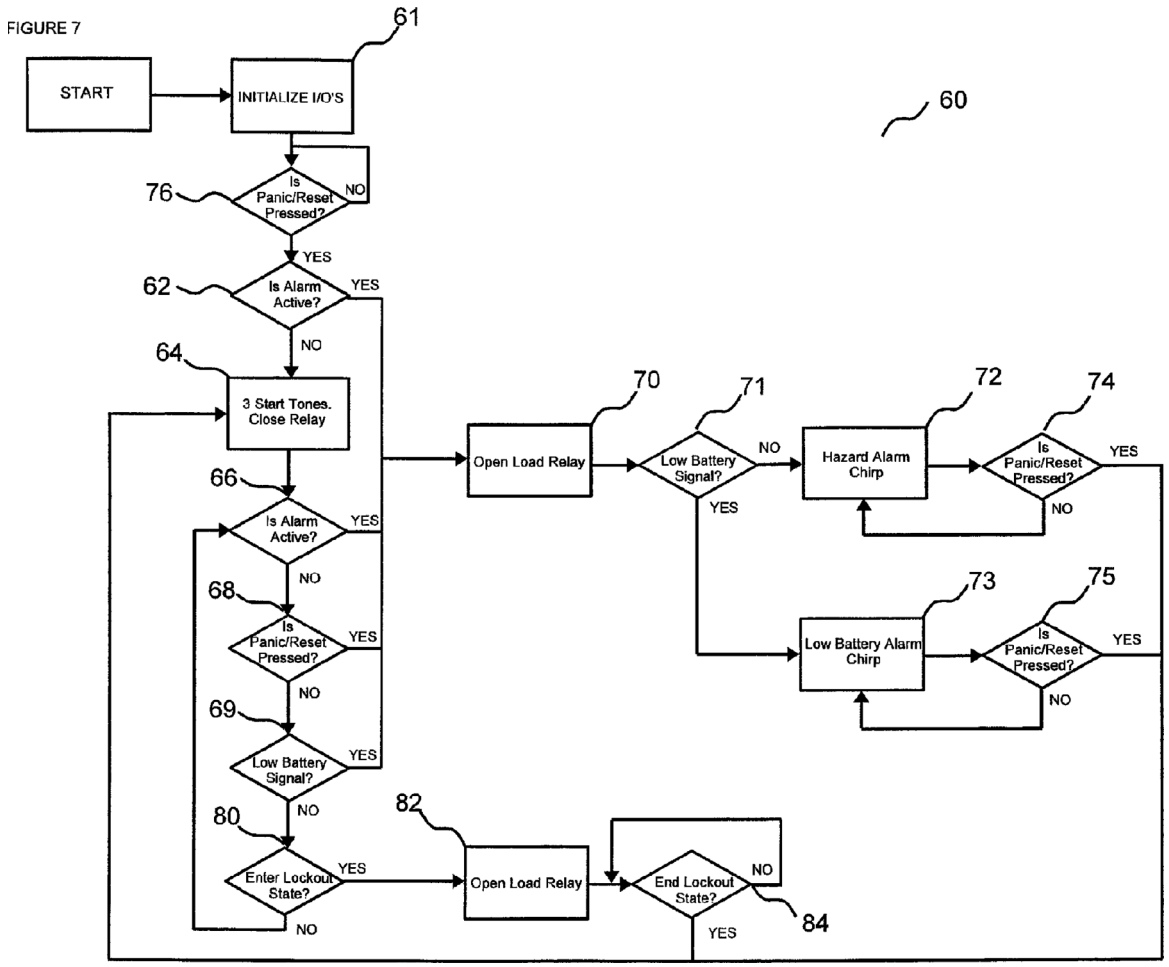

Ex. 1015, Fig. 7

iii. *Smith*

[229]. Smith discloses an electrical circuit ("at least one electrical power control circuit") as shown in FIG 4 (annotated below), which is configured to allow the microprocessor 64 (yellow) to cycle power to the microwave magnetron (orange), for example by sending digital signals to control the position of a relay connected in-line with the magnetron power supply.

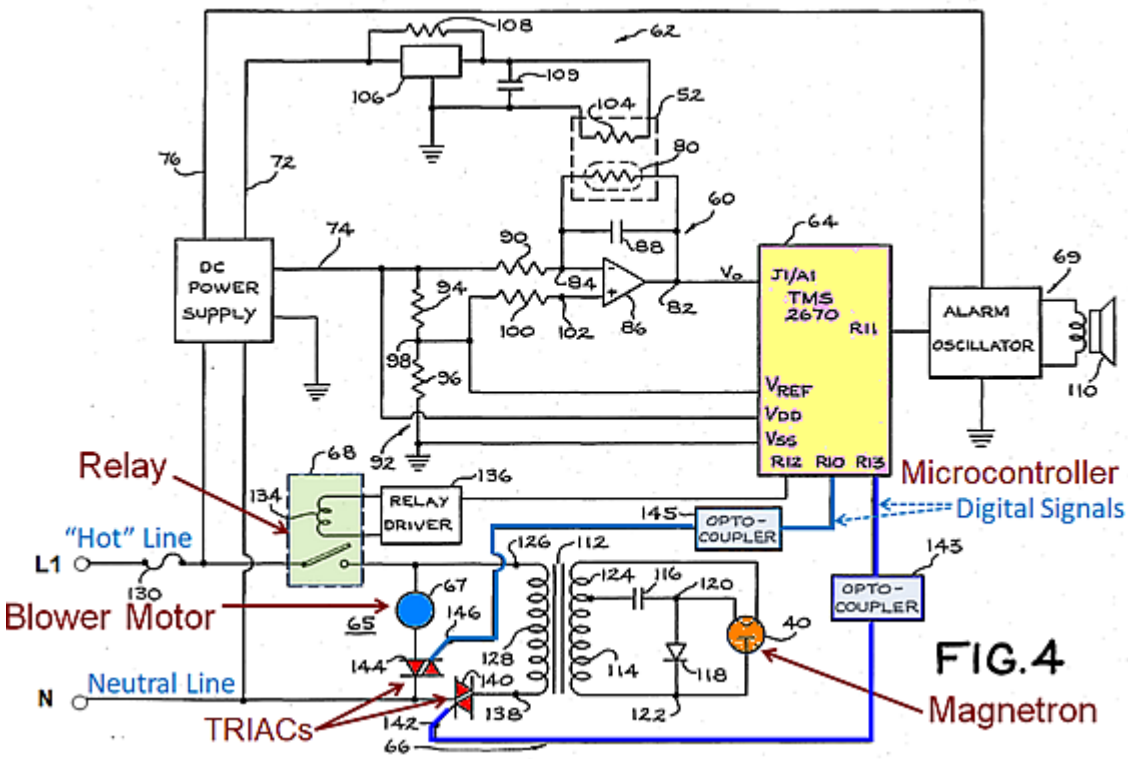

Ex. 1014 at Fig. 4 (annotated).

[230]. This operation is further explained by Smith, referring to the flowchart of Fig. 5 (reproduced below):

> Upon detection of a rate of change greater than reference ΔL, (Yes to Inquiry 180) ***a signal is provided at output port R12 causing power control relay 68*** to open, thereby de-energizing magnetron 40 and the blower motor 67 (Block 182). . . . The de-energizing of both the magnetron and the blower motor using either technique in effect turns off power to the oven.

Ex. 1014 at 9:17-28 (emphasis added); Ex. 1002 ¶¶[196-97, 289].

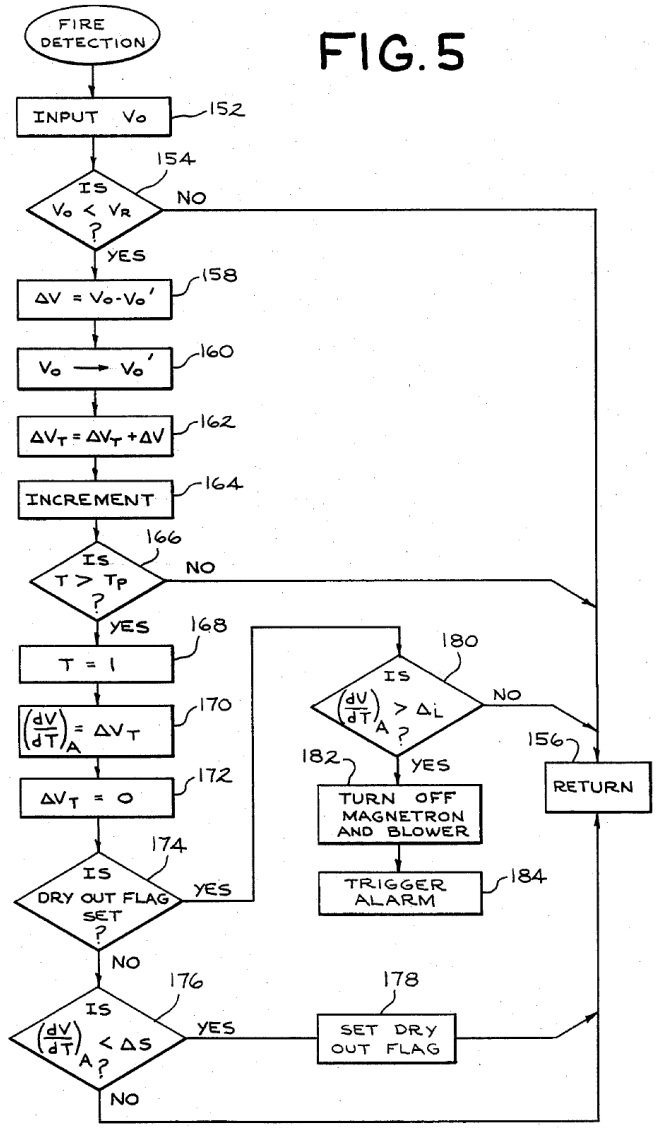

Id., Fig. 5

[231]. The disclosed power control relays are electronically controlled to open or shut by microcontroller 64. Ex 1002 ¶¶[196-97, 283, 289].

7. <u>The "USB Port" Claims (4, 7, 8, 12, 18 and 19)</u>

[232]. Claim 4 recites: "…wherein the at least one electrical connector includes a USB port…"

[233]. Claim 7 recites: "…herein the at least one electrical connector

includes an electric outlet, and a USB port…"

[234]. Claim 8 recites: "…wherein the at least one electrical connector includes at least one of an electric outlet and a USB port…"

[235]. Claim 12 recites: "…and a USB port on the front side, wherein the at least one…"

[236]. Claim 18 recites "…wherein the at least one electrical connector comprises a USB port…."

[237]. Claim 19 recites: "…and a USB port…"

[238]. The '746 USB Port claims are structurally similar and are discussed together. The distinctions between them do not substantively change my conclusions regarding the invalidity of the claims.

a. ***USB Port***

i. *Emma*

[239]. As shown in annotated Fig.1 below, Emma discloses a microwave oven that includes at least one auxiliary low power receptacle (i.e., "auxiliary electrical outlet") "for plugging in low power device for example, rechargeable devices, such as cellular phones, PDA's or other electronic devices that do not demand high power" on the front side. Ex. 1011 ¶[0027].

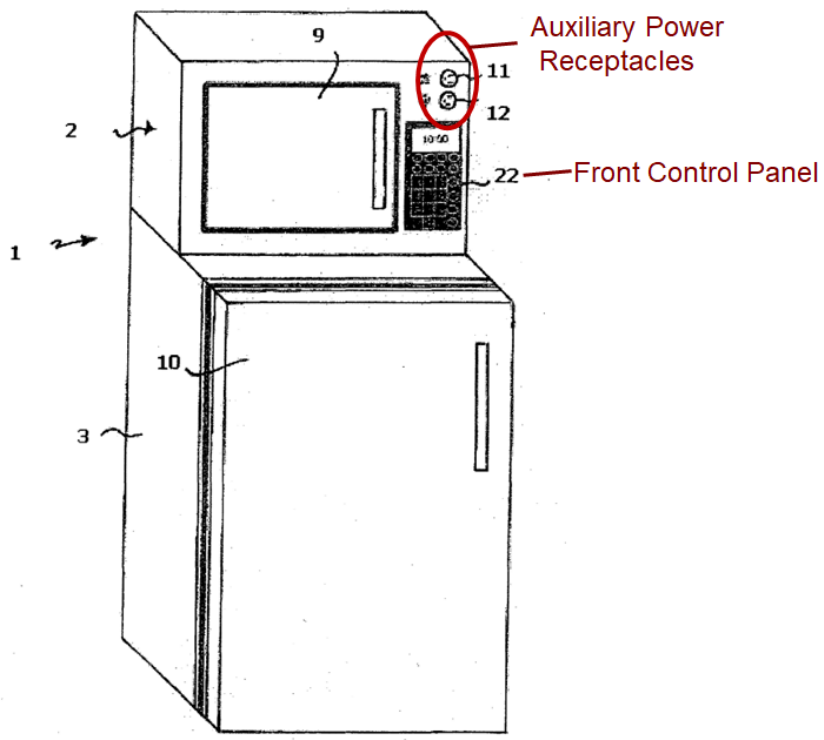

FIGURE 1

Id., Fig. 1. (annotated).

ii. *Quezada*

[240]. Quezada teaches a power sourcing receptacle that integrates a standard AC electrical receptacle and a USB port for a direct current (DC) power source. Ex. 1020, (57). As shown in Figure 2 below, an embodiment includes a power sourcing receptacle 100 that combines a USB receptacle 104 with an AC electrical receptacle 102. *Id.,* Ex. 1020 ¶[0023].

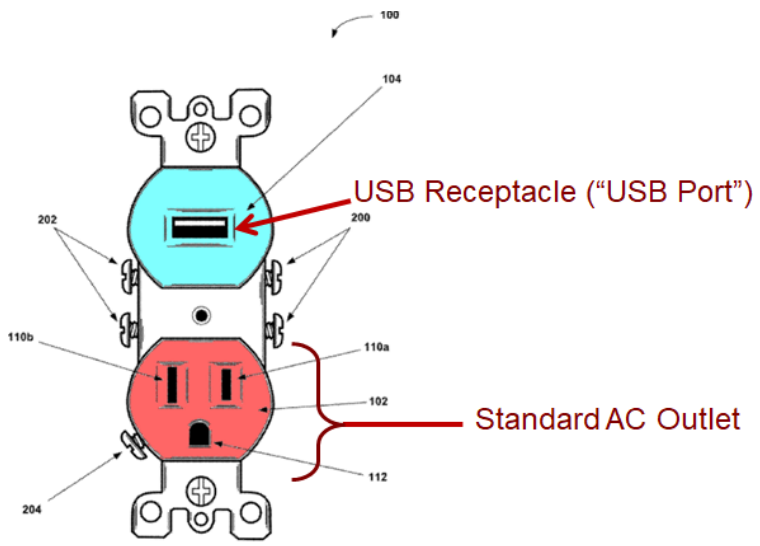

FIG. 2

Ex. 1020, Fig. 2 (annotated)

[241]. "The USB receptacle 104 provides 100-150 milliamps (mA) and 5 volts direct current (DC) to devices inserted into USB receptacle 104." Ex. 1020 ¶[0025]. Thus, the USB receptacle 104 can provide DC power to computer peripherals, digital cameras, printers, personal media players, flash drives, "and other devices capable of accepting power or charge via a USB connector." *Id*. As is the case with the USB port claimed in the Challenged Patents, the USB port in Quezada is used solely for supplying DC power, and not for conveying data. (*See*, e.g., Ex. 1020 at ¶¶[0025, 0032, 0037, 0038].

[242]. Figure 6 below is a block diagram from Quezada showing the flow of power to the USB port 104 ("5V DC"; blue) and AC receptacle 102 ("120 V AC"; red). Ex. 1020 ¶[0039]. A main power source supplies power directly to AC receptacle 102 and directly to USB regulated voltage sourcing

unit ("USB RVSU"; yellow) 600. *Id.,* Ex. 1020, ¶¶[0039-0040],

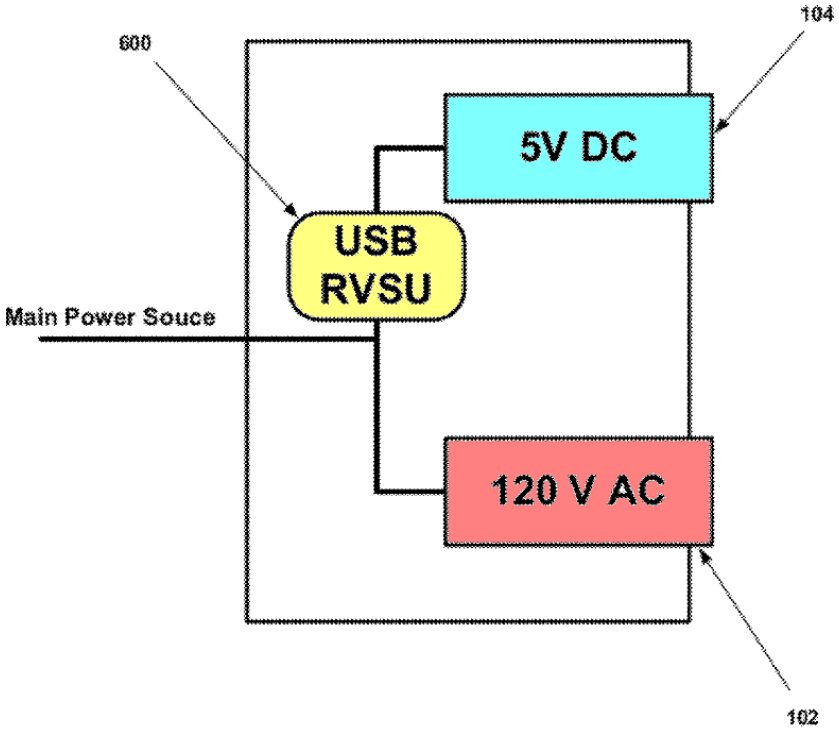

FIG. 6

Ex. 1020, Fig. 6 (annotated).

[243]. As shown below in Quezada Fig. 7, the USB RSVU 600 includes a transformer 700 (red) that steps down the incoming source voltage to 5 volts, a rectifier 702 (green) that converts the voltage from alternating to (pulsating) direct current, a filter 704 (purple) that smooths the waveform of the direct current, and a voltage regulator 706 (blue) to maintain the voltage. Ex. 1020 Fig. 7, ¶[0041].

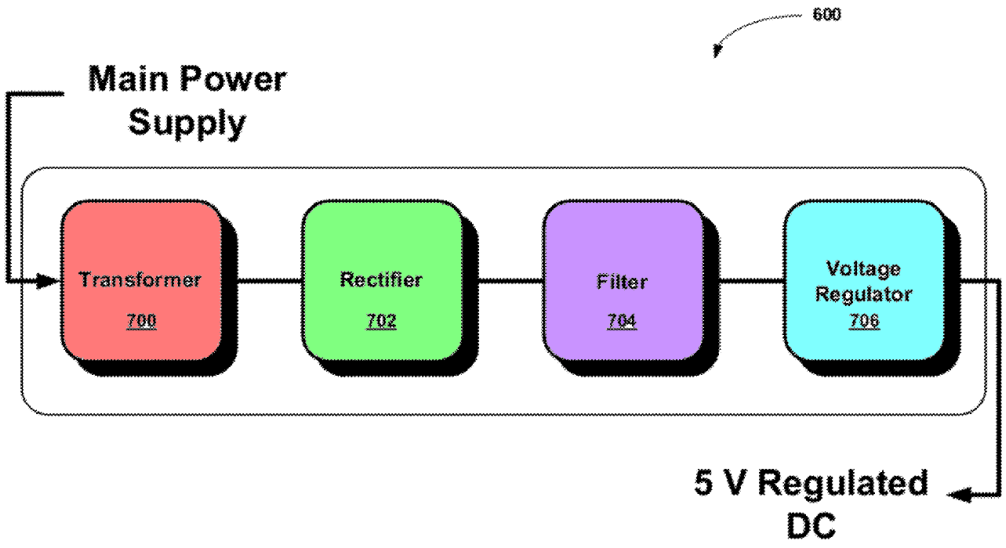

FIG. 7

Ex.1020, Fig. 7 (annotated).

[244]. As such, the USB RVSU 600 provides a 5-volt regulated voltage to the USB port 104. *Id.*

8. <u>The "Refrigerator" Claims (Claims 13, 20 and 21)</u>

[245]. Claim 13 recites: "a refrigerator, wherein the refrigerator is electrically connected to the at least one externally accessible electrical connector…"

[246]. Claim 20 recites: "…and further comprising: at least one of a refrigerator…wherein the at least one of the refrigerator…is in operative electrical connection with the at least one power control circuit…"

[247]. Claim 21 recites: "…configured to receive a plug that is in electrical connection with a refrigerator…"

[248]. The ’746 Refrigerator claims are structurally similar and are discussed together. The distinctions between them do not substantively change my conclusions regarding the invalidity of the claims. The teachings of most of these elements are explicitly described in my Original Declaration at least at ¶[283] and are incorporated by reference into this section. Accordingly, references are made to my Original Declaration and additional opinions are provided below to the extent clarification or context is beneficial.

a. ***Refrigerator***

i. *Emma*

[249]. Emma discloses a refrigerator electrically connected to a refrigerator receptacle (i.e., “at least one externally accessible electrical connector”) on the microwave oven. As discussed above in VII.A.1.a.i, the Refrigerator receptacle is in operative electrical connection with a power control circuit. As shown below in Figure 2, the “[r]efrigerator 3 is connected to microwave oven 2 by power cord 7 to refrigerator receptacle 15, shown at the rear of the microwave 2 in FIG. 2.” *Id.* ¶[0026]; Ex. 1002 ¶¶[138-39, 285, 287].

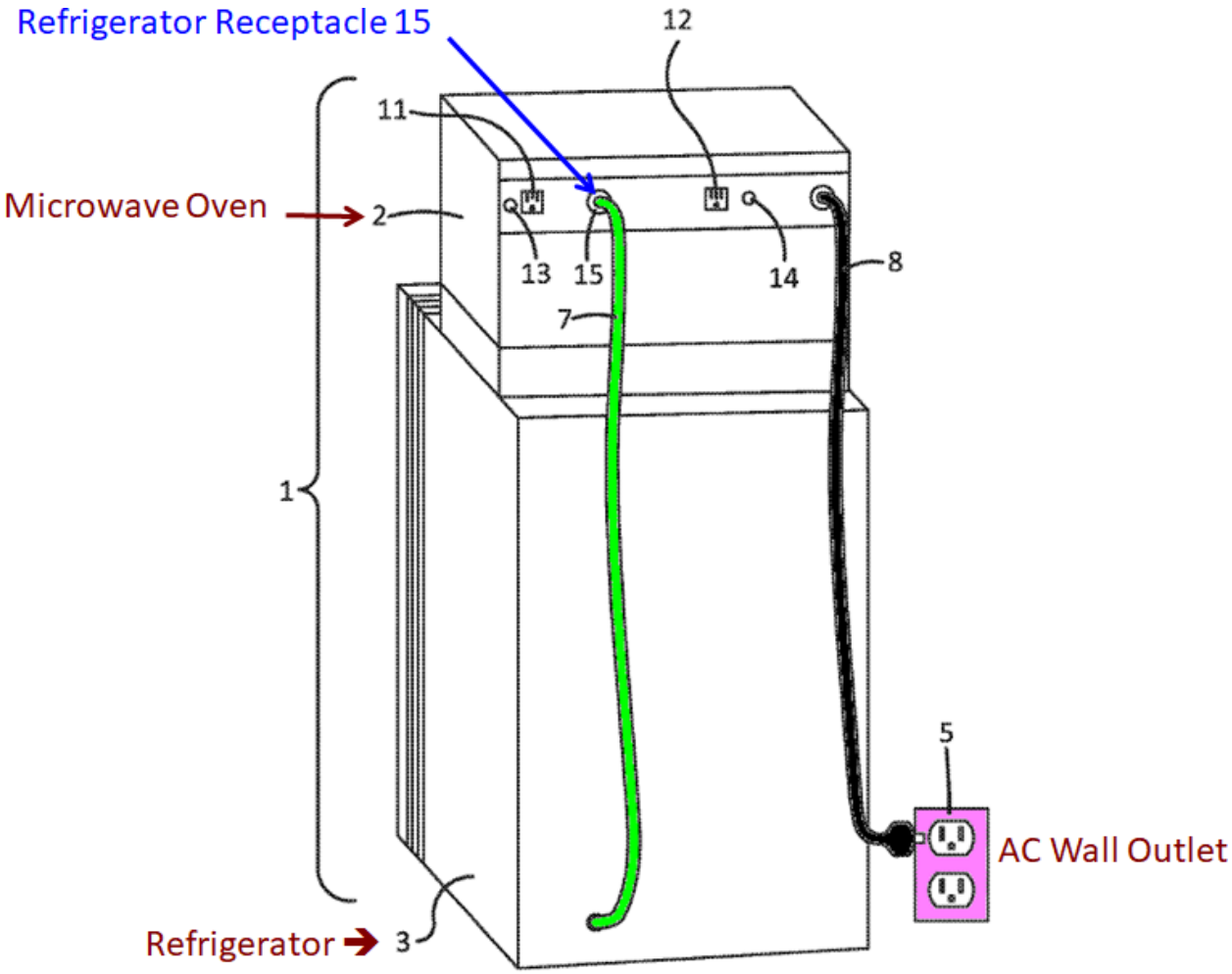

FIGURE 2

Ex. 1011, Fig. 2 (annotated).

9. <u>The "Sensor" Claim (Claim 5)</u>

[250]. Claim 5 recites: "wherein the smoke sensor includes at least one of a radiation emitter and radiation receiver, a photosensor, a motion sensor, an ionization sensor, and a VOC sensor."

[251]. The teaching of these elements is explicitly described in my Original Declaration at least in ¶[283]; they are incorporated by reference into

this section. Accordingly, references are made to my Original Declaration and additional opinions are provided below to the extent clarification or context is beneficial.

a. ***VOC Sensor***

[252]. The Sensor Claim (claim 5) recites: "wherein the smoke sensor includes at least one of a radiation emitter and radiation receiver, a photosensor, a motion sensor, an ionization sensor, and a VOC sensor."

i. *ISDU*

[253]. ISDU discloses both "ionization and photoelectric smoke detectors." Ex. 1012 at 9; Ex. 1002 ¶[295].

ii. *Smith*

[254]. As discussed above, Smith discloses a microwave oven which includes a smoke /gas sensor. The gas sensor in Smith is adapted to detect VOC and is thus a VOC sensor Ex 1002 ¶[296].

iii. *Butt*

[255]. Butt's exemplary smoke detectors include: "ADEMCO 5806 detector, the SecureLinc (73942) detector, and the Wisdom 433 Mhz Wireless Smoke Detector." Ex. 1015 at 4:49-52. The Ademco 5806 is a photoelectric smoke detector. Ex 1002 ¶[297].

B. **Reasoning Supporting Opinions on Invalidity of the ’746 Patent**

1. Obvious in view of Emma combined with ISDU

[256]. As discussed above, the combination of Emma and ISDU teaches each and every element of claims 1-3, 5, 6, 8-11, 13-17 and 20-24. The reason and motivations for combining or modifying Emma and ISDU are discussed above with respect to the ’745 patent. *See* ¶¶[106-112]. Those same reasons also render ’746 claims 1-3, 5, 6, 8-11, 13-17 and 20-24 obvious in view of Emma combined with ISDU and are incorporated into this section.

2. Obvious in view of Emma combined with Smith

[257]. As discussed above, the combination of Emma and Smith teaches each and every element of claims 1-3, 5, 6, 8-11, 13-17 and 20-24. The reason and motivations for combining or modifying Emma and Smith are discussed above with respect to the ’745 patent. *See* ¶¶[113-19]. Those same reasons also render the ’746 Patent claims 1-3, 5, 6, 8-11, 13-17 and 20-24 obvious in view of Emma combined with Smith and are incorporated into this section. To the extent there are any differences or additional clarifications related to the ’746 Patent, they are discussed below.

[258]. It is my opinion that the Smith Microwave oven teaches withdrawing power to the magnetron “responsive…to sensing the level of smoke continuously for a predetermined time.” Should the Board disagree, it is my further opinion that it would have been obvious to a POSITA to modify

Smith and/or the Smith/Emma combination to have this function. Based on a teaching suggestion or motivation in Smith to measure smoke level over time, or because a POSITA would want to have a smoke sensor which minimizes false alarms by verifying that a high smoke level signal is not spurious, it would have been obvious to a POSITA to configure the Emma/Smith combination to withdraw power to the microwave only after smoke has been detected continuously for a predetermined period of time to avoid spurious false positive alarms.

3. Obvious in view of Emma combined with Butt, and alternatively, with Butt and Smith

[259]. As discussed above, the combination of Emma combined with Butt, and alternatively, with Butt and Smith teaches each and every element of claims 1-3, 5, 6, 8-11, 13-17 and 20-24. The reason and motivations for combining or modifying Emma and Butt, or alternatively, Emma, Butt, and Smith are discussed above with respect to the ’745 patent. *See* ¶¶[120-29]. Those same reasons also render ’746 Patent claims 1-3, 5, 6, 8-11, 13-17 and 20-24 obvious in view of Emma combined with Butt, and alternatively, with Butt and Smith, and are incorporated into this section. To the extent there are any differences or additional clarifications related to the ’746 Patent, they are discussed below.

[260]. It is my opinion that the Smith Microwave teaches withdrawing

power to the magnetron "responsive…to sensing the level of smoke continuously for a predetermined time." Should the Board disagree, in my opinion it would have been obvious to a POSITA to modify Smith, Butt, and/or the Emma/Butt or Emma/Butt/Smith combination to have this function. Based on a teaching suggestion or motivation in Smith to measure smoke level over time, or because a POSITA would have wanted to have a smoke sensor which minimizes false alarms by verifying that a high smoke level signal is not spurious, it would have been obvious to a POSITA to configure the Emma/Butt or Emma/Butt/Smith combination to withdraw power to the microwave only after smoke is detected continuously for a predetermined period of time to avoid spurious false positive alarms.

4. Obvious in view of Emma combined with one of ISDU and Smith and the Knowledge of A POSITA

[261]. The bases for combining Emma's microwave refrigerator with the smoke sensors taught in ISDU or Smith are provided in Sections VII.B.1 and VII.B.2. As discussed above, the combination of Emma with one of ISDU and Smith teaches each and every element of claims 4, 7, 8, 12, 18 and 19 except for explicitly reciting USB ports. However, as discussed above with respect to the '745 patent, it would have been obvious to modify the combination of Emma and ISDU or Smith to include USB ports. *See* ¶¶[130-34]. Those same reasons also render the '746 Patent claims 1-3, 5, 6, 8-11,

13-17 and 20-24 obvious in view of Emma combined with one of ISDU and Smith and the Knowledge of a POSITA and are incorporated into this section.

5. Obvious in view of Emma combined with one of ISDU or Smith, and further combined with Quezada

[262]. The bases for combining Emma's microwave refrigerator with the smoke sensors taught in ISDU or Smith are provided in Sections VII.B.1 and VII.B.2. As discussed above, the combination of Emma with one of ISDU or Smith, and further combined with Quezada teaches each and every element of claims 4, 7, 8, 12, 18 and 19. The reason and motivations for combining or modifying Emma (combined with one of ISDU and Smith) with Quezada are discussed above with respect to the '745 patent. *See* ¶¶[135-40]. Those same reasons also render '746 claims 4, 7, 8, 12, 18 and 19 obvious in view of Emma combined with one of ISDU or Smith, and further combined with Quezada and are incorporated into this section.

6. All of the Claims are Indefinite ("operative connection with the cooking area")

[263]. I understand that to satisfy the enablement requirement, the "patent's specification must "enable any person skilled in the art . . . to make and use" the patented invention… The purpose of the enablement requirement is to ensure that the public is told how to carry out the invention, i.e., to make and use it." Amgen Inc. v. Sanofi, 987 F.3d 1080, 1084 (Fed. Cir. 2021).

Furthermore, my understanding of indefiniteness is discussed above. *See* ¶[140.1].

[264]. In my opinion claims 1-24 are not patentable as they are indefinite. Independent Claims 1, 15 and 22 recite "a smoke sensor…in operative connection with the cooking area…" Ex. 1001 '746 patent. Those claims are indefinite because a POSITA would not have been able to determine with reasonable certainty the scope of those claim limitations.

[265]. Specifically, the claim language does not provide any indication of what it means for a smoke sensor to be in "operative connection" with an area. It is unclear whether the connection is such that the smoke sensor somehow operates in the area, or if the smoke sensor operates based on being connected to the area. While the specification shows circuit diagrams having hardware and logic in operative electrical or operative logical connection, it does not provide any guidance on the meaning of the term "operative connection with the cooking area." Furthermore, while the specification provides certain specific examples of a safety sensor being positioned, e.g., "in the microwave cavity 332 adjacent air exhaust vents 338, 340 of the microwave, which comprises an air passage that connects an area where food is cooked in the microwave oven to the air outside the housing of the microwave oven." Ex. 1001 at 16:27-30. But the claims are not so limited – a

POSITA would have to guess as to what "operative connection" means in the context of the claims as written. Lastly, because the term is indefinite, Petitioner has no basis for determining whether it is enabled or not.

7. Indefinite, and/or Lacks Written Description, and/or Lacks Enablement ("sensing the level of smoke continuously for a predetermined time")

[266]. I understand to satisfy the written description requirement, the specification must "reasonably convey [] to those skilled in the art that the inventor had possession" of the claimed invention as of the filing date. Ariad Pharms., Inc. v. Eli Lilly & Co., 598 F.3d 1336, 1351 (Fed. Cir. 2010) (en banc).

[267]. In my opinion, dependent claim 10 is invalid for lacking written description, and/or lacking enablement, and/or being indefinite. Claim 10 recites "wherein the at least one power control circuit is operative to cause cooking power to the magnetron to be withdrawn to end the cooking session responsive at least in part to ***sensing the level of smoke continuously*** for a predetermined time. Ex. 1001 Claim 10 (emphasis added). That claim language is indefinite because a POSITA would not have been able to determine what "sensing the level of smoke continuously" means based on the claim language and specification. While the specification references "continuously" one time in the context of monitoring power draw, there is no

discussion regarding what "continuously" means with respect to monitoring that power draw, let alone with respect to sensing the level of smoke. Ex. 1001 at 23:14. For example, does "sensing the level of smoke continuously" require the control circuit to sense the level of smoke uninterrupted without any process devoted to any other action? How often does the control circuit need to sense smoke in order for it to be "continuously?" Does it require the level of smoke sensed to not change for some period of time or is it that the act of sensing of smoke must be continuous? A POSITA would have to guess as to what "sensing the level of smoke continuously for a predetermined time" means in the context of the claims as written and would not have been able to determine the metes and bounds of the claim. Further, as noted above, the specification does not describe "sensing the level of smoke continuously for a predetermined time" or what is required to be continuous. Accordingly, the specification lacks a written description with respect to this term. And the specification does not enable a POSITA to make or use a control circuit to "[sense] the level of smoke continuously" as claimed.

8. Indefinite and/or Lack a Written Description for Support ("Preset minimum period after the magnetron becomes inoperative")

[268]. In my opinion, dependent claim 14 is invalid for lacking written description, and/or being indefinite. Claim 14 recites "wherein the at least

one power control circuit is operative to cause electrical power to be unavailable to the at least one electrical connector while the magnetron is operative and for at least a ***preset minimum period after the magnetron becomes inoperative***." Ex. 1001 Claim 14 (emphasis added). While the specification describes a time delay feature based on when the compressor is shut down, for example 3 minutes, to "prevent rapid restart of the compressor that may otherwise result in damages," Nowhere in the specification does it discuss causing electrical power to be unavailable to the at least one electrical connector (e.g., the refrigerator), for a preset minimum period after the magnetron becomes inoperative, that is after cooking / cooking power ceases. Accordingly, the specification lacks a written description of the claim terms. Further, the specification does not discuss what a "preset minimum period" is with respect to the magnetron becoming inoperative; there is no discussion of what minimum is required or how a POSITA would understand the metes and bounds of such preset minimum period. Therefore, that term is also indefinite.

VIII. CONCLUSION

[269]. I declare that all statements made herein of my knowledge are true, and that all statements made on information and belief are believed to be true, and that these statements were made with the knowledge that willful false

statements and the like so made are punishable by fine or imprisonment, or both, under Section 1001 of Title 18 of the United States Code. I further declare under penalty of perjury under the laws of the United States of America that the foregoing is true and correct.

Date: October 8, 2023

Mark N. Horenstein, Ph.D.