IN THE UNITED STATES DISTRICT COURT
FOR THE NORTHERN DISTRICT OF IOWA
WESTERN DIVISION

INTIRION CORPORATION, Plaintiff/Counterclaim-Defendant, vs. COLLEGE PRODUCTS, INC., Defendant/Counterclaim-Claimant.	No. 23-CV-4023-CJW-KEM **ORDER**

TABLE OF CONTENTS

I. INTRODUCTION 2

II. RELEVANT BACKGROUND 2

III. PRINCIPLES OF CLAIM CONSTRUCTION 3

IV. DISCUSSION 7

A. "Control Circuit" 9

B. "Level of Smoke" / "Amount of Smoke" 14

C. "Dangerous Condition" 16

D. "To Enable the Microwave Oven" Etc. 22

V. CONCLUSION 24

I. INTRODUCTION

This matter is before the Court on the parties' claim construction briefing. (*See* Docs. 102; 104; 109; 114; 115). On March 19, 2024, the Court heard oral argument on this matter. (Doc. 111). For the following reasons, the Court **adopts** the following claim constructions; the Court also **denies** defendant's motion to strike certain portions of Dr. Tanbour's errata sheet. (Doc. 120).

II. RELEVANT BACKGROUND

Plaintiff asserts that defendant infringes the following six patents: U.S. Patent Nos. 9,657,974 ("the '974 Patent"), 9,791,206 ("the '206 Patent"), 10,495,374 ("the '374 Patent"), 11,274,876 ("the '876 Patent"), 11,674,745 ("the '745 Patent") and 11,674,746 ("the '746 Patent") (collectively, the "patents-in-suit"). (*See* Doc. 62). The patents-in-suit belong to the same patent family and generally concern the construction, operation, and features of combination refrigerator/microwave appliance units.

Plaintiff sells combination refrigerator/microwave appliance units under the trade name "MicroFridge." (*See* Doc. 104, at 9). Each of the patents-in-suit relates to plaintiff's MicroFridge products. Plaintiff's first patent application related to these products was filed in December 2008 as U.S. Patent Application number 12/317,362, which ultimately published in July 2009 as U.S. Publication number 2009/0188911A1 (now U.S. Patent No. 8,742,304). (*See generally* Doc. 104-8, at 235–49). This patent is not asserted by plaintiff to have been infringed upon by defendant, but it is the progenitor of the six patents-in-suit, each of which claims priority to the original 12/317,362 application.

The respective refrigerator and microwave appliances which comprise the combination units taught by the patents-in-suit are linked together by a circuitry configuration which allows the unit to be powered by a single power cord that enters the microwave, with its other end connected to a wall outlet. The microwave contains a

microprocessor controller which controls the delivery of power to the components of the unit and modulates the power draw between those components to avoid overloading the circuit. The foregoing invention was disclosed by the progenitor of the patents-in-suit, i.e., the original 12/317,362 application, and this disclosure is incorporated by each of the patents-in-suit and is therefore common to all the patents-in-suit. The patents-in-suit further teach the same combination refrigerator/microwave appliance units with the addition of USB ports on the microwave and/or a smoke sensor contained inside the microwave.

III. PRINCIPLES OF CLAIM CONSTRUCTION

The Court applies the law of the Federal Circuit for patent questions. *Int'l Bus. Machs. Corp. v. Zillow Grp., Inc.*, 50 F.4th 1371, 1377 (Fed. Cir. 2022). The question of patent infringement involves a two-step analysis: first, the court interprets the meaning and scope of any disputed patent claim terms, and then the accused product is compared to the claims, as construed, to determine whether the claims read on the product. *McGinley v. Luv N' Care Ltd.*, 819 F. App'x 913, 917 (Fed. Cir. 2020) (citing *Markman v. Westview Instruments, Inc.*, 52 F.3d 967, 976 (Fed. Cir. 1995), *aff'd*, 517 U.S. 370 (1996)).

Patent claims "define the invention to which the patentee is entitled the right to exclude." *Phillips v. AWH Corp.*, 415 F.3d 1303, 1312 (Fed. Cir. 2005) (quoting *Innova/Pure Water, Inc. v. Safari Water Filtration Sys., Inc.*, 381 F.3d 1111, 1115 (Fed. Cir. 2004)). The court, not the jury, decides the meaning of a patent claim. *Markman v. Westview Instruments, Inc.*, 517 U.S. 370, 387–88 (1996). In deciding this meaning, a court is not bound to either party's proposed claim construction but may adopt its own appropriate construction. *Homeland Housewares, LLC v. Whirlpool Corp.*, 865 F.3d 1372, 1376 (Fed. Cir. 2017). But the adopted construction must not change the scope of what the claims protect. *Am. Piledriving Equip., Inc. v. Geoquip, Inc.*, 637 F.3d 1324,

1331 (Fed. Cir. 2011). The court's role "is not to redefine claim recitations or to read limitations into the claims to obviate factual questions of infringement and validity but rather to give meaning to the limitations actually contained in the claims[.]" *Id.*

The meaning of the words of a claim is typically "their ordinary and customary meaning." *Phillips*, 415 F.3d at 1312 (quotation omitted). The ordinary and customary meaning (sometimes called "plain and ordinary meaning"), however, is not "the meaning of the term in the abstract." *Id.* at 1321; *see also Medrad, Inc. v. MRI Devices Corp.*, 401 F.3d 1313, 1319 (Fed. Cir. 2005) (explaining that the court should not determine the scope of the ordinary meaning of the term "in a vacuum"). Rather, the ordinary meaning is the meaning that a "person of ordinary skill in the art" ("POSITA") would assign to the words at the time of the invention after reading the entire patent, including the specification and the prosecution history.[1] *Phillips*, 415 F.3d at 1313; *see also Anderson v. Int'l Eng'g & Mfg., Inc.*, 160 F.3d 1345, 1348–49 (Fed. Cir. 1998) ("A word describing patented technology takes its definition from the context in which it was used by the inventor.").

To determine the meaning of the claims, courts consider a hierarchy of evidence. *Phillips*, 415 F.3d at 1314. Most persuasive is the intrinsic evidence: the language of the claims, the specification, and the prosecution history. *Id.*; *see also id.* at 1324 (recognizing that "there is no magic formula or catechism for conducting claim construction" and explaining that courts are not "barred from considering any particular

[1] There are two exceptions to the general rule that words of a claim are given their ordinary meaning as understood by persons of skill in the art: "1) when a patentee sets out a definition and acts as his own lexicographer, or 2) when the patentee disavows the full scope of a claim term either in the specification or during prosecution." *Thorner v. Sony Comput. Ent. Am. LLC*, 669 F.3d 1362, 1365 (Fed. Cir. 2012). But "[t]he standards for finding lexicography and disavowal are exacting," *Hill-Rom Servs., Inc. v. Stryker Corp.*, 755 F.3d 1367, 1371 (Fed. Cir. 2014), and here the Court finds no evidence of either.

sources or required to analyze sources in any specific sequence, as long as those sources are not used to contradict claim meaning that is unambiguous in light of the intrinsic evidence"). The claims themselves "provide substantial guidance as to the meaning of particular claim terms," and "the context in which a term is used in the asserted claim can be highly instructive." *Id.* Furthermore, the claims "must be read in view of the specification, of which they are a part." *Id.* at 1315 (quoting *Markman*, 52 F.3d at 979). The specification "is always highly relevant to the claim construction analysis. Usually, it is dispositive; it is the single best guide to the meaning of a disputed term." *Id.* (quoting *Vitronics Corp. v. Conceptronic, Inc.*, 90 F.3d 1576, 1582 (Fed. Cir. 1996)).

In analyzing the specification, courts consider the disclosed embodiments of the claimed invention; but in doing so, courts must be sure not to import limitations from the specification into the claims. *Id.* at 1323. On one hand, the patent claims should generally be construed to encompass preferred embodiments described in the specification, and it is generally error to adopt a construction that excludes them. *See On-Line Techs., Inc. v. Bodenseewerk Perkin-Elmer GmbH*, 386 F.3d 1133, 1138 (Fed. Cir. 2004). On the other hand, the mere fact of a particular embodiment being taught (or even "preferred") is generally not sufficient to justify limiting an otherwise broad claim scope to the particular embodiment taught. *See, e.g.*, *GE Lighting Sols., LLC v. AgiLight, Inc.*, 750 F.3d 1304, 1310 (Fed. Cir. 2014). "[T]he line between construing terms and importing limitations can be discerned with reasonable certainty and predictability if the court's focus remains on understanding how a person of ordinary skill in the art would understand the claim terms." *Phillips*, 415 F.3d at 1323.

As for the prosecution history, it represents part of the "intrinsic evidence," consisting of "the complete record of the proceedings before the [United States Patent and Trademark Office ("USPTO")] and includes the prior art cited during the examination of the patent." *Id.* at 1317. The prosecution history represents a period of

"ongoing negotiation" between the USPTO and the inventor. *Id.* (citing *Inverness Med. Switz. GmbH v. Warner Lambert Co.*, 309 F.3d 1373, 1380–82 (Fed. Cir. 2002)). The back-and-forth nature of the negotiations of the prosecution history often lacks the clarity and succinctness of the specification, and for that reason, it may be less useful for claim construction purposes than the final specification of the patent. *Id.*

Courts may also consider extrinsic evidence such as expert testimony and dictionary definitions. *Phillips*, 415 F.3d at 1317–19. Extrinsic evidence, however, is recognized as generally "less reliable" than the intrinsic record in determining claim construction, and extrinsic evidence cannot be used "for the purpose of varying or contradicting the terms of the claims." *Genuine Enabling Tech. LLC v. Nintendo Co.*, 29 F.4th 1365, 1372–73 (Fed. Cir. 2022) (citations omitted); *see also Anderson*, 160 F.3d at 1348 ("[D]ictionary definitions of ordinary words are rarely dispositive of their meaning in a technological context."). As an example of the proper use of extrinsic evidence, the Federal Circuit has explained that when "the ordinary meaning of claim language as understood by a person of skill in the art may be readily apparent even to lay judges, and claim construction in such cases involves little more than the application of the widely accepted meaning of commonly understood words[,] . . . general purpose dictionaries may be helpful." *Phillips*, 415 F.3d at 1314 (citing *Brown v. 3M*, 265 F.3d 1349, 1352 (Fed. Cir. 2001)).

Abiding by the foregoing principles, the district court's duty at the claim construction stage is to resolve disputes between the parties as to the claim scope, and the Court must therefore "determine what claim scope is appropriate in the context of the patents-in-suit." *O2 Micro Int'l Ltd. v. Beyond Innovation Tech. Co.*, 521 F.3d 1351, 1361 (Fed. Cir. 2008); *see also U.S. Surgical Corp. v. Ethicon, Inc.*, 103 F.3d 1554, 1568 (Fed. Cir. 1997) ("Claim construction is a matter of resolution of disputed meanings and technical scope, to clarify and when necessary to explain what the patentee covered

by the claims, for use in the determination of infringement."). Thus, a court's determination "that a claim term 'needs no construction' or has the 'plain and ordinary meaning' may be inadequate when a term has more than one 'ordinary' meaning or when reliance on a term's 'ordinary' meaning does not resolve the parties' dispute." *O2 Micro*, 521 F.3d at 1361.

Ultimately, the language of the patent claims "must be precise enough to afford clear notice of what is claimed." *Nautilus, Inc. v. Biosig Instruments, Inc.*, 572 U.S. 898, 909 (2014) (citing *Markman*, 517 U.S. at 373). If the patent claims, "read in light of the [patent's] specification delineating the patent, and the prosecution history, fail to inform, with reasonable certainty, those skilled in the art about the scope of the invention," the patent is invalid for indefiniteness. *Id.* at 901.

IV. DISCUSSION

As an initial matter, the parties wish to make clear their agreement that the phrase "at least one of . . . [and] . . .," appearing in Claim 11 of the '374 Patent, Claim 28 of the '876 Patent, Claim 22 of the '745 Patent, and Claims 5 and 20 of the '746 Patent, should be given its plain and ordinary meaning, where the plain and ordinary meaning is "at least one of . . . and/or . . . (disjunctive)." (*See* Docs. 102, at 1; 104, at 7–8). The Court finds the "and/or" disjunctive implication to be readily apparent with respect to the listed items set forth in these claims, and thus the Court accords this phrase its plain and ordinary meaning and, in the absence of any dispute, finds further construction unnecessary.

The parties dispute the following claim terms and phrases:

Disputed Claim Term/Phrase	Patent Claim(s)	Intirion's Proposed Construction	College Products' Proposed Construction
"control circuit" / "power control circuit" / "electrical power control circuit"	'974 Patent: Claims 1, 2 '206 Patent: Claims 9, 11 '374 Patent: Claim 9 '876 Patent: Claims 1, 21 '745 Patent: Claims 1, 15, 24 '746 Patent: Claims 1, 15, 22	No construction necessary; plain and ordinary meaning	Plain and ordinary meaning, where the plain and ordinary meaning is: "circuit that carries electrical signals for directing the operations of a device, but does not include the main power current for that device"
"level of smoke" / "amount of smoke"	'876 Patent: Claims 1, 21 '745 Patent: Claims 1, 15, 21, 24 '746 Patent: Claims 1, 15, 22	No construction necessary; plain and ordinary meaning	Indefinite under 35 U.S.C. § 112
"dangerous condition"	'206 Patent: Claims 9, 11 '374 Patent: Claim 9	No construction necessary; plain and ordinary meaning	Indefinite under 35 U.S.C. § 112

Disputed Claim Term/Phrase	Patent Claim(s)	Intirion's Proposed Construction	College Products' Proposed Construction
"to enable the microwave oven to deliver cooking power in a next subsequent cooking session responsive at least in part to the smoke sensor no longer sensing the smoke indicative of the dangerous condition" (and similar terms)	'206 Patent: Claims 9, 11 '374 Patent: Claim 9	No construction necessary; plain and ordinary meaning	"to make the microwave oven able to cook in a next subsequent cooking session only when at least the smoke sensor no longer senses smoke indicative of the dangerous condition"

(*See generally* Doc. 104).

A. "Control Circuit"

Both parties advocate for adopting the plain and ordinary meaning of "control circuit." The parties disagree, however, as to whether the plain and ordinary meaning of "control circuit" includes the power supply for the device. Defendant contends it does not, arguing that the plain and ordinary meaning is "circuit that carries electrical signals for directing the operations of a device, but does not include the main power current for that device." Upon a review of the pertinent intrinsic and extrinsic sources of evidence, the Court agrees with defendant and adopts the plain and ordinary meaning of "control circuit," which means "a circuit that carries electrical signals for directing the operations of a device, but does not include the main power current for that device."

Philips dictates the Court look first to the intrinsic evidence, which includes the patents-in-suit and their respective specifications and prosecution histories. 415 F.3d at 1314. Plaintiff is correct that the patents-in-suit do not contain any patentee lexicography

and disavowal, and thus the plain and ordinary meaning should control. (Doc. 104, at 28); *see also Phillips*, 415 F.3d at 1313. Plaintiff argues that because nowhere in either the claims or the specifications of the patents-in-suit is there an explicit negative limitation such as "but does not include the main power current," plaintiff's broad construction should control. Under this construction, plaintiff argues that "a POSITA would understand that the control circuit may—or may not—include the main power current for the device, because the Patents are agnostic as to whether the power current must be routed through the control circuit, or must be somewhere else." (Doc. 104, at 20). The Court finds that the presence or absence of an explicit negative limitation in the claims and specifications is not dispositive of whether such a negative limitation is part of the inherent plain and ordinary meaning of "control circuit." The task for the Court is to determine the plain and ordinary meaning of the claim term and to accord the term the full scope of that meaning. *See 3M Innovative Props. Co. v. Tredegar Corp.*, 725 F.3d 1315, 1333 (Fed. Cir. 2013); *Thorner*, 669 F.3d at 1367; *Akami Techs., Inc. v. Cable & Wireless Internet Servs., Inc.*, 344 F.3d 1186, 1194 (Fed. Cir. 2003).

Plaintiff rests the remainder of its argument largely on Figure 3, reproduced below, which is common among the respective specifications of the patents-in-suit:

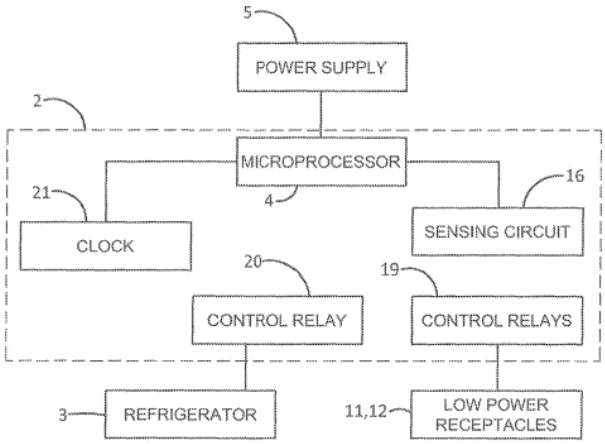

FIGURE 3

(Doc. 104-2, at 5, 34, 69, 110, 152, 194). Plaintiff asserts the Power Supply 5 is "connected directly" to the Microprocessor 4 (which is a part of the control circuit) and contends that this connection proves that the control circuit includes the main power current. (Doc. 104, at 21). Plaintiff's reliance on Figure 3 is misplaced. Figure 3 is a "block diagram," *see, e.g.*, '794 Patent, col. 3 ll 3–4, which generally shows the elements of the system, but not the precise nature of the relationships therebetween. *See In re Ghiron,* 442 F.2d 985, 991 (C.C.P.A. 1971). The lines in Figure 3, which represent connections, do not portray the particularities of the circuit, including whether a given line constitutes the "main power current" for the device. The fact that the control circuit merely receives power from the power supply, as it must to function, does not prove that this pathway belongs to the main power current of the device. The Court finds the intrinsic evidence presented by plaintiff to be unconvincing as to the plain and ordinary meaning of "control circuit" in the context of the patents-in-suit.

Defendant, in turn, offers limited intrinsic evidence to support its proposed construction where the plain and ordinary meaning of "control circuit" includes the negative limitation excluding the main power current. Defendant cites the specification

of the ’974 Patent, which states that “[a] relay 20 is connected in the power line to the refrigerator and may be actuated by signals from controller 4.” ’974 Patent, col. 4 ll. 53–55. Defendant argues that the fact that the power line and controller are described separately implies that the main power circuit and control circuit are “electrically separate networks.” (Doc. 104, at 25). The Court notes that this description is taken from a preferred embodiment and is thus not dispositive as to whether the full scope of the plain and ordinary meaning of “control circuit” must exclude the main power current, as defendant argues, or instead may or may not exclude the main power current, as plaintiff argues. *See GE Lighting Sols.*, 750 F.3d at 1310. The Court finds the intrinsic evidence presented by defendant to be similarly unconvincing as to the plain and ordinary meaning of “control circuit” in the context of the patents-in-suit.

After analysis of the intrinsic evidence, the Court remains at the start, with little persuasive intrinsic evidence to indicate whether the plain and ordinary meaning of “control circuit” must, or simply may, exclude the main power current. Under *Phillips*, the Court now turns to extrinsic evidence. 415 F.3d at 1317.

The parties set forth various kinds of extrinsic evidence. Plaintiff submits the opinion of its expert, Dr. Emad Tanbour, in which Dr. Tanbour opines that “[t]he ‘power control circuit’ may or may not include the current for the device.” (Doc. 104-8, at 187). Dr. Tanbour relies on Figure 3 (discussed above) and Figure 20, which is a somewhat similar schematic diagram, to support his conclusion. Based on the Court’s discussion regarding the lack of dispositive specificity in Figure 3 above, the reasoning of which is equally applicable to Figure 20, the Court finds that Dr. Tanbour’s conclusions are rooted in thin intrinsic evidence. Plaintiff’s additional extrinsic evidence, based on Dr. Mark Horenstein’s textbook, is ultimately unpersuasive for the reasons defendant set forth in its briefing and thus will not be further addressed by the Court. (*See* Docs. 109 & 110).

Defendant submits the opinion of its own expert, Dr. Horenstein, who opines that a POSITA would instead understand that the term "control circuit" excludes the main power current. (Doc. 104-8, at 310). Dr. Horenstein's opinion includes his annotation of Figure 4, a schematic diagram which is common among the respective specifications of the patents-in-suit, where Dr. Horenstein purports to differentiate the control circuit (in blue) from the main power current (in red), reproduced below:

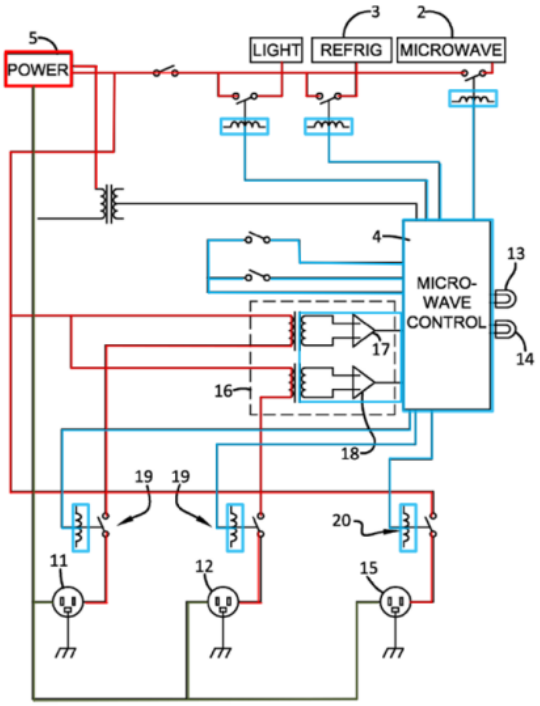

FIGURE 4

(*Id.*, at 328). Defendant also offers three definitions from technical publications which corroborate defendant's proposed construction, including a definition from the Institute of Electrical and Electronics Engineers (IEEE). (Doc. 104, at 26-27).

Faced with dueling expert opinions, the Court finds it appropriate to consider the additional extrinsic evidence of technical definitions offered by defendant, including the definition from the IEEE. The IEEE is an influential authority in electrical engineering, claiming to publish "approximately a third of the world's technical literature in electrical

engineering, computing, and electronics." *See* Institute of Electrical and Electronics Engineers, *IEEE at a Glance*, https://www.ieee.org/about/at-a-glance.html (last updated Feb. 2024). The IEEE defines "control circuit" as "[t]he circuit that carries the electric signals directing the performance of the controller but does not carry the main power circuit." (Doc. 104-8, at 330). Defendant's two other references, the Minnesota Electrical Code 2023 and WPPI Energy, are largely consistent with the IEEE definition. (*See id.* at 331). Here, given the sparsity of intrinsic evidence as to a satisfying answer, the Court finds these industry definitions to be especially helpful in understanding how a POSITA would interpret the term "control circuit" in the context of the patents-in-suit. The intrinsic evidence gives no indication that a POSITA would read the patents-in-suit as somehow deviating from the apparent industry standard shown by the extrinsic evidence, which is that "control circuit" excludes the main power current for that device.

After reviewing the totality of the intrinsic and extrinsic evidence offered by the parties, the Court finds defendant's construction accurately reflects the plain and ordinary meaning of "control circuit," consistent with the term's usage in the patents-in-suit. Thus, the Court adopts the following construction of the plain and ordinary meaning of "control circuit": "circuit that carries electrical signals for directing the operations of a device, but does not include the main power current for that device."

B. "Level of Smoke" / "Amount of Smoke"

The Court now shifts its attention to "level of smoke" and "amount of smoke," two terms which suggest an identical construction. The Court will consolidate its discussion of both constructions using the single term "level of smoke."

Plaintiff argues that "level of smoke" should be accorded its plain and ordinary meaning, which plaintiff contends is readily discernible to a lay person or judge. Defendant argues the term "level of smoke" is indefinite. (*See* Doc. 104, at 47). The Court finds that "level of smoke" is a term of degree, unbounded by the patent

specification or claim language. Although "numerical precision is not always required" for a term of degree to be sufficiently definite, *Ironburg Inventions Ltd. v. Valve Corp.*, 64 F.4th 1274, 1285 (Fed. Cir. 2023), the Court finds that here, the available evidence fails to objectively articulate the bounds of what is claimed so as to "inform those skilled in the art about the scope of the invention with reasonable certainty," *Nautilus*, 572 U.S. at 910. As a result, the Court finds the term "level of smoke" to be indefinite.

For a patent term to be sufficiently definite, the term must inform a person of ordinary skill in the art about the scope of the invention to a reasonable degree of certainty. *See Ethicon Endo-Surgery, Inc. v. Covidien, Inc.*, 796 F.3d 1312, 1317 (Fed. Cir. 2015) ("A claim is invalid for indefiniteness under [Title 35, United States Code, Section 112, paragraph 2] if its language, when read in light of the specification and prosecution history, fails to inform skilled artisans about the scope of the invention with reasonable certainty.") (footnote omitted) (citing *Nautilus*, 572 U.S. at 910). This "reasonable certainty" standard exists to balance the inevitable imprecisions inherent to language itself with the goal of affording clear notice to the public of what is claimed. *See Nautilus*, 572 U.S. at 909 ("On the one hand, the definiteness requirement must take into account the inherent limitations of language. . . . At the same time, a patent must be precise enough to afford clear notice of what is claimed, thereby apprising the public of what is still open to them.") (cleaned up). A term of degree is indefinite when available evidence "provides insufficient guidance as to any objective boundaries for the claims—including where the claims are 'purely subjective' such that their scope cannot be determined with reasonable certainty." *Niazi Licensing Corp. v. St. Jude Med. S.C., Inc.*, 30 F.4th 1339, 1348 (Fed. Cir. 2022).

The Court finds first that "level of smoke" is a term of degree. In the context of the claims, the word "level" (as well as the word "amount") implies a measurement of the concentration of smoke, where at some point, the concentration of smoke reaches a

particular threshold. Levels of smoke thus fall along on a continuum, where each point on the continuum means a different concentration of smoke. The measurement of smoke at a particular point on the continuum reflects a given "level of smoke."

Plaintiff argues that "level of smoke" is broad, but not boundless in meaning. Plaintiff argues that the term "explain[s] that the microwave oven smoke sensor . . . is operative to sense that the . . . 'level' of smoke generated by the cooking process, or otherwise present within the microwave oven while it is in operation, has exceeded a threshold amount—which could indicate that the microwave's continued operation would be unsafe." (Doc. 104, at 47). Plaintiff relies on the trip point of the smoke detector as a threshold for the "level of smoke," a reference which plaintiff argues gives meaning to level of smoke that triggers an action. Yet, plaintiff fails to specify that trip point or provide a sufficiently objective range of trip points. The Court finds that references to "oil" or "overcooked food," (*see* Doc. 104, at 49)—references which the Court discusses further below in relation to the term "dangerous condition"—do not constitute examples which provide sufficient guidance to objectively bound the term. *See Niazi*, 30 F. 4th at 1348. Because the patent does not provide any examples which describe a specific smoke detector or range of smoke points, "level of smoke" fails to inform a POSITA with reasonable certainty about the scope of the invention. *See Nautilus*, 572 U.S. at 910. As a result, the Court finds "level of smoke," as well as "amount of smoke," to be indefinite.

C. "Dangerous Condition"

Just as with "level of smoke," plaintiff argues that the term "dangerous condition" warrants no construction, as the term's meaning is readily discernible from the patent claim language and specification. Defendant, in turn, argues that the term is indefinite, asserting that the term is a term of degree and the patent specification and claim language set no bounds for a proper construction. (*See* Doc. 104, at 33). The Court finds that although "dangerous condition" is not a term of degree, its meaning likewise fails to

inform a POSITA with reasonable certainty about the scope of the invention, and thus "dangerous condition" is indefinite.

First, the Court clarifies that "dangerous condition" is not a term of degree. The parties agree that some level of smoke, when it passes a threshold, changes from "normal smoke emitted during the cooking or heating of food or beverages," *see* '206 Patent, col. 10 ll. 65-66, to a "dangerous condition." "Dangerous condition" thus represents a threshold separating certain levels of smoke, below which there is not a dangerous condition. Every concentration of smoke above the threshold is a dangerous condition. Thus, "dangerous condition" is a binary—something either is a "dangerous condition," or it is not.

This distinction, however, does not resolve the question of indefiniteness. Just as with "level of smoke" and "amount of smoke," the term "dangerous condition" indicates a condition at which the microcontroller cuts power to the microwave oven. (*See* Doc. 104, at 36). As discussed above, the Court finds that "level of smoke" is an unbounded term of degree and is thus indefinite. As a result, "level of smoke" does not help to define a threshold that separates a "dangerous condition" from a condition that is not dangerous. The Court now turns to the patent claim language, patent specification, prosecution history, and all other sources of extrinsic evidence to search for the bounds of "dangerous condition" as distinct from an indefinite "level of smoke."

The Court seeks to determine a construction of "dangerous condition" consistent with its plain and ordinary meaning. *Phillips*, 415 F.3d at 1313. Plaintiff argues that "the smoke point of oil" is sufficiently specific intrinsic language to determine the threshold separating a "dangerous condition" from one that is not. The Court disagrees. Plaintiff relies on language from the '206 Patent, which states that the "safety circuit may use the smoke point of oil or similar food products as the basis for its threshold amount." *See* '206 Patent, col. 10, ll. 63–65. Plaintiff argues that "[a] POSITA working on

microwave ovens would understand that any oil intended for cooking could be used as a reference point." (Doc. 104, at 45). Based upon the available evidence, the Court is unwilling to accept "oil" as suitably precise language to determine a smoke point. The Court agrees with defendant that oils have various smoke points, and the smoke point of one oil may not be equivalent, or even similar, to the smoke point of another. (*See* Doc. 115, at 7). For example, the Court observes that the smoke point of avocado oil is 520 degrees Fahrenheit, whereas the smoke point for extra-virgin olive oil is 320 degrees Fahrenheit. *See Cooking Oils and Smoking Points*, What's Cooking America, https://whatscookingamerica.net/information/cookingoiltypes.htm. And, as defendant correctly observes, even if the patents-in-suit identified the smoke point of an identifiable oil or food as the "reference point," this still fails to specify what the relevant smoke threshold is beyond which constitutes a "dangerous condition." (*See* Doc. 115, at 7). This is because the microwave tolerates some level of smoke before it becomes a "dangerous condition." The threshold itself is not when food begins to smoke, i.e., the smoke point, but rather when the level of smoke crosses some threshold, at which point it becomes a "dangerous condition"—a point which has not been sufficiently identified. (*See id.*).

Because the intrinsic evidence, including the term "level of smoke" and references to an unidentified smoke point of oil or food, proves unavailing, the Court asks whether there are any ways a POSITA could otherwise determine the meaning of "dangerous condition" in the context of the patents-in-suit. Plaintiff argues that "a POSITA would understand that the included smoke sensor should allow operation of the microwave under normal cooking conditions but should disable the microwave if an unsafe level of smoke arises." (Doc. 104, at 44). Plaintiff elaborates that "[t]here is a difference between 'normal smoke emitted during the cooking or heating of food or beverages' [(citing '206 Patent, col. 10 ll. 65–66)] and 'excessive smoke generated from overcooked food' [(citing

id. at col. 9 ll. 31–32)]." (Doc. 104, at 45). According to plaintiff, "[t]his is an objective boundary." (*Id.*). Plaintiff's expert testified that the threshold constituting this boundary is either set by an "industry standard," or it is determined by the manufacturer through the manufacturer's own research and development. (*See* Doc. 115, at 8).

Defendant's expert, Dr. Horenstein, stated, "There are no standard thresholds for microwaves to be shut down (e.g., due to an undefined 'dangerous condition.')" (Doc. 104-8, at 333).

Plaintiff's expert, Dr. Tanbour, was asked by defendant during his deposition, "Have you seen the industry standards for dangerous conditions for microwaves?" The unsigned deposition transcript which defendant submitted to the Court reflects that Dr. Tanbour replied, "I have not seen in specific an industry standard, no." (Doc. 112-1, at 59). Plaintiff later filed a notice of errata objecting to defendant's filing of Dr. Tanbour's unsigned deposition transcript because Dr. Tanbour had not had time to read and correct errors in the transcript and sign it. (*See* Doc. 118). The accompanying errata sheet indicated that Dr. Tanbour changed his reply to the question from, "I have not seen in specific an industry standard, no," to the following: "I have not seen *any* specific industry standard *for microwaves*, no. *But I have seen industry or manufacturer standards for smoke detectors and common smoke detector obscuration sensitivity ranges. And those would be within the knowledge of a POSITA.*" (Doc. 118-1, at 4) (changes emphasized). The reason Dr. Tanbour gave for this change was that it was a clarification due to an unclear question and was necessary to correct his incomplete answer. (*See id.*).[2]

[2] The parties fiercely dispute the propriety of the Court considering the changes to Dr. Tanbour's testimony set forth by the errata sheet. (Docs. 120; 126; 132). Federal Rule of Civil Procedure 30(e) provides:

> (1) On request by the deponent or a party before the deposition is completed, the deponent must be allowed 30 days after being notified by the officer that the transcript or recording is available in which:
>
> (A) to review the transcript or recording; and
>
> (B) if there are changes in form or substance, to sign a statement listing the changes and the reasons for making them.

In *Platts v. Kelly Services, Inc.*, No. C 14-3026-MWB, 2015 WL 3378257 (N.D. Iowa May 26, 2015), the Court was faced with a "Motion to Strike Plaintiff's Entry on Errata Sheet" and held that "[Rule 30(e)] expressly allows for changes in 'substance,' as well as form," and that, although other courts in the Eighth Circuit have been inconsistent in deciding what corrections should be submitted in an errata sheet, the "flexible approach" articulated by the Third Circuit was the most appropriate lens through which to evaluate the proposed changes. *See* 2015 WL 3378257, at *5–7 (citing *EBC, Inc. v. Clark Bldg. Sys., Inc.*, 618 F.3d 253, 267–68 (3d Cir. 2010)). The Court held that a substantive change to deposition testimony is permitted under Rule 30(e) if there is a justification for the change, such as "clarification of the prior testimony or explanation of the deponent's confusion." *Id.* at *6.

Here, the Court finds Dr. Tanbour has provided a sufficient justification for the changes to his testimony. As plaintiff explains in its brief, (Doc. 126, at 12–14), the line of questioning made it reasonable for Dr. Tanbour to be confused by the inquiry into an "industry standard for dangerous condition" as distinct from industry standards for microwave smoke detectors. The Court does not find this change to the substance of Dr. Tanbour's testimony to be a "sham" lacking any explanation. *See Platts*, 2015 WL 3378257, at *6. The Court finds it appropriate to consider the changes in Dr. Tanbour's original testimony to the extent these items may serve in aiding the Court in claim construction. As noted above, the Court is unconstrained as to what it may consider in deciphering the meaning that a POSITA would assign to the term "dangerous condition." *Phillips*, 415 F.3d at 1324 (recognizing that "there is no magic formula or catechism for conducting claim construction" and explaining that courts are not "barred from considering any particular sources or required to analyze sources in any specific sequence, as long as those sources are not used to contradict claim meaning that is unambiguous in light of the intrinsic evidence"). The Court therefore considers Dr. Tanbour's errata sheet on the basis of its evidentiary value for claim construction and **denies** defendant's motion to strike certain portions of Dr. Tanbour's errata sheet. (Doc. 120).

In light of the Court's discussion of the applicability of *Teva Pharmaceuticals USC, Inc. v. Sandoz, Inc.*, 789 F.3d 1335 (Fed. Cir. 2015), the Court finds that Dr. Tanbour's errata sheet carries little weight because, even when accepting the existence of industry standards for smoke detectors, the patents-in-suit fail to appropriately specify the applicable mode of measurement for "dangerous condition."

Based upon the intrinsic and extrinsic evidence, it appears that various reasonable modes of measurement exist to measure a "dangerous condition." The measurement may apparently be based upon industry standards or may be made by the manufacturer on an individual basis based on research and development relative to the characteristics of the microwave, such as its size, as well as the manufacturer's own determination of what constitutes a "dangerous condition." This case is thus analogous to *Teva Pharmaceuticals USA, Inc. v. Sandoz, Inc.*, 789 F.3d 1335 (Fed. Cir. 2015), a case in which the Federal Circuit held that a claim term is indefinite if its definition may rest upon multiple modes of measurement and the available evidence does not specify a method or unit of measure. In *Teva*, the Federal Circuit determined that the term "molecular weight" was indefinite because that term could refer to any one of multiple relevant measures for molecular weight, and the evidence considered by the court failed to show with reasonable certainty that a POSITA would be informed about the scope of the invention. 789 F.3d at 1341. Here, similarly, the evidence does not indicate the appropriate measurement by which smoke crosses a threshold into a "dangerous condition." The patents-in-suit do not specify how much smoke is dangerous, nor do they provide example thresholds of a "dangerous condition." Although the specifications mention that the smoke point of oil or food could be a "reference point" for a "dangerous condition," the patents-in-suit acknowledge that some amount of smoke is not dangerous, and they otherwise fail to specify at what point the smoke level reaches the threshold point of "dangerous condition." The extrinsic evidence suggests that this threshold is set either by an industry standard, or by the manufacturer on an individual basis relative to the characteristics of the microwave, such as its size, as well as the manufacturer's own determination of what constitutes a "dangerous condition." The patents-in-suit fail to specify which measurement is applicable to differentiate a "dangerous condition" from one that is not. In short, the patents-in-suit, "when read in light of the specification and prosecution

history, fail[ ] to inform skilled artisans about the scope of the invention with reasonable certainty." *Ethicon*, 796 F.3d at 1317.

In addition to the stated sources of evidence, the parties offer their interpretations of caselaw, invoking fact patterns of various disputes and arguing the fact patterns as analogous to, or distinguishable from, the facts here. *See, e.g.*, *Eibel Process Co. v. Minn. & Ont. Paper Co.*, 261 U.S. 45 (1923); *Enzo Biochem, Inc. v. Applera Corp.*, 599 F.3d 1325 (Fed. Cir. 2010); *Velocity Pat. LLC v. Mercedes-Benz USA, LLC*, No. 13-CV-8413, 2016 WL 5234110 (N.D. Ill. Sept. 21, 2016); *Cap. Sec. Sys., Inc. v. NCR Corp.*, 725 F. App'x 952 (Fed. Cir. 2018); *Exmark Mfg. Co. v. Briggs & Stratton Power Prods. Grp., LLC*, 879 F.3d 1332 (Fed. Cir. 2018); *Sonix Tech. Co. v. Publ'ns Int'l, Ltd.*, 844 F.3d 1370 (Fed. Cir. 2017). In the Court's view, all instances of dispositive caselaw, particularly *Teva*, 789 F.3d 1335, are discussed above, and the Court finds additional caselaw offered by the parties to be extraneous.

In summary, the Court finds "dangerous condition" would be ill-defined to a POSITA, failing to meet the "reasonable certainty" standard such that it is not amenable to construction as to the meaning the term would have to a POSITA. *See Ethicon*, 796 F.3d at 1317. For this reason, this Court finds the term "dangerous condition" to be indefinite.

D. "To Enable the Microwave Oven" Etc.

Lastly, the parties dispute the scope of the claim language which includes "to enable the microwave oven to deliver cooking power in a next subsequent cooking session responsive at least in part to the smoke sensor no longer sensing the smoke indicative of the dangerous condition" (and similar terms). (*See* Doc. 104, at 50). Plaintiff contends the language should be accorded its plain and ordinary meaning and that no further construction is necessary. Defendant proposes that a POSITA would understand the language to mean "to make the microwave oven able to cook in a next subsequent cooking

session only when at least the smoke sensor no longer senses smoke indicative of the dangerous condition." (*Id.*).

The Court agrees with plaintiff that the claim terms here need no further construction, with the caveat that "dangerous condition" is indefinite for the reasons discussed above. The Court finds that plaintiff's proposed construction is largely duplicative of the claim language as written, and that the meaning thereof is readily understandable to a jury as written, whereas defendant's proposed construction risks inappropriately limiting the claims.

The parties' dispute largely centers on the phrases "to enable" and "power in a next subsequent cooking session." The Court agrees with plaintiff that defendant's proposed construction inappropriately reads nonexistent limitations into the claims and excluding embodiments described in the specifications. First, defendant's proposed construction requires a direct activation of power to the microwave, which occurs only when the smoke sensor no longer senses a dangerous condition. (*See* Doc. 104, at 58). The Court finds that the claims contain no such limitation. The plain and ordinary meaning of the phrase "to enable" in this context is readily understandable to a jury as one which contemplates both actively supplying power and passively permitting power. *See Phx. Licensing, L.L.C. v. AAA Life Ins. Co.*, No. 13-cv-1081, 2015 WL 1813456, at *27–28 (E.D. Tex. Apr. 20, 2015) (adopting plain and ordinary meaning construction and rejecting "[d]efendants' construction [that] replaces [an] easily understandable word . . . intended to express the same meaning"); *Worlds, Inc. v. Activision Blizzard, Inc.*, No. 12-10576-DJC, 2015 WL 3932369, at *6 (D. Mass. June 26, 2015) ("[W]ithout more, the Court will not replace the word 'determining' with the word 'selecting.'"); *cf. Quantum Loyalty Sys., Inc. v. TPG Rewards, Inc.*, No. 09-022-RGA-MPT, 2012 WL 3993105, at *12 (D. Del. Sept. 11, 2012) (construing "enabling" to mean "permitting").

Second, defendant's proposed construction excludes the embodiment where the system is reset by opening the door. That embodiment states, "Alternatively, or in addition, the alcohol sensor 226 may be reset upon a sensor sensing opening of the door 9 of the microwave oven 2." '206 Patent, col. 10 ll. 31–33. *See On-Line Techs.*, 386 F.3d at 1138. Defendant instead focuses on the embodiment which states, "The alcohol sensor 226 may be reset automatically responsive to the alcohol sensor no longer detecting gas indicative of the dangerous condition." '206 Patent, col. 10, ll. 29–31. Yet, the Federal Circuit has cautioned that "reliance on the specification must not go so far as to import limitations into claims from examples or embodiments appearing only in a patent's written description." *Silicon Graphics, Inc. v. ATI Techs., Inc.*, 607 F.3d 784, 792 (Fed. Cir. 2010) (internal quotation marks omitted); *see also SciMed Life Sys., Inc. v. Advanced Cardiovascular Sys., Inc.*, 242 F.3d 1337, 1340 (Fed. Cir. 2001) (explaining that "reading a limitation from the written description into the claims" is one of the "cardinal sins of patent law") (citing *Comark Commc'ns, Inc. v. Harris Corp.*, 156 F.3d 1182, 1186 (Fed. Cir. 1998)). The Court is not free to change the scope of the claim, *Am. Piledriving Equip.*, 637 F.3d at 1331, and the Court finds that the plain and ordinary meaning of the scope of the claim is adequately conveyed by this term as written, and thus it needs no further construction.

V. CONCLUSION

For the above-mentioned reasons, the Court **adopts** the foregoing claim constructions; the Court also **denies** defendant's motion to strike certain portions of Dr. Tanbour's errata sheet. (Doc. 120).

IT IS SO ORDERED this 31st day of May, 2024.

C.J. Williams, Chief Judge
United States District Court
Northern District of Iowa