PTO/AIA/82A (07-13)
Approved for use through 01/31/2018. OMB 0651-0035
U.S. Patent and Trademark Office; U.S. DEPARTMENT OF COMMERCE
Under the Paperwork Reduction Act of 1995, no persons are required to respond to a collection of information unless it displays a valid OMB control number.

TRANSMITTAL FOR POWER OF ATTORNEY TO ONE OR MORE REGISTERED PRACTITIONERS

NOTE: This form is to be submitted with the Power of Attorney by Applicant form (PTO/AIA/82B) to identify the application to which the Power of Attorney is directed, in accordance with 37 CFR 1.5, unless the application number and filing date are identified in the Power of Attorney by Applicant form. If neither form PTO/AIA/82A nor form PTO/AIA82B identifies the application to which the Power of Attorney is directed, the Power of Attorney will not be recognized in the application.

Application Number	
Filing Date	herewith
First Named Inventor	Gregory Allan Thomas Hall
Title	MULTIPLE LINKED APPLIANCES WITH AUXILIARY OUTLET
Art Unit	
Examiner Name	
Attorney Docket Number	INT-1001 CIP 2 C 4

SIGNATURE of Applicant or Patent Practitioner

Signature	/Ralph E. Jocke/	Date (Optional)	
Name	Ralph E.. Jocke	Registration Number	31029
Title (if Applicant is a juristic entity)			
Applicant Name (if Applicant is a juristic entity)			

NOTE: This form must be signed in accordance with 37 CFR 1.33. See 37 CFR 1.4(d) for signature requirements and certifications. If more than one applicant, use multiple forms.

☑ *Total of 1 forms are submitted.

This collection of information is required by 37 CFR 1.131, 1.32, and 1.33. The information is required to obtain or retain a benefit by the public which is to file (and by the USPTO to process) an application. Confidentiality is governed by 35 U.S.C. 122 and 37 CFR 1.11 and 1.14. This collection is estimated to take 3 minutes to complete, including gathering, preparing, and submitting the completed application form to the USPTO. Time will vary depending upon the individual case. Any comments on the amount of time you require to complete this form and/or suggestions for reducing this burden, should be sent to the Chief Information Officer, U.S. Patent and Trademark Office, U.S. Department of Commerce, P.O. Box 1450, Alexandria, VA 22313-1450. DO NOT SEND FEES OR COMPLETED FORMS TO THIS ADDRESS. **SEND TO: Commissioner for Patents, P.O. Box 1450, Alexandria, VA 22313-1450.**

If you need assistance in completing the form, call 1-800-PTO-9199 and select option 2.

PTO/SB/80 (11-08)
Approved for use through 11/30/2011. OMB 0651-0035
U.S. Patent and Trademark Office; U.S. DEPARTMENT OF COMMERCE
Under the Paperwork Reduction Act of 1995, no persons are required to respond to a collection of information unless it displays a valid OMB control number.

POWER OF ATTORNEY TO PROSECUTE APPLICATIONS BEFORE THE USPTO

I hereby revoke all previous powers of attorney given in the application identified in the attached statement under 37 CFR 3.73(b).

I hereby appoint:

☑ Practitioners associated with the Customer Number: 07733

OR

☐ Practitioner(s) named below (if more than ten patent practitioners are to be named, then a customer number must be used):

Name	Registration Number	Name	Registration Number

as attorney(s) or agent(s) to represent the undersigned before the United States Patent and Trademark Office (USPTO) in connection with any and all patent applications assigned only to the undersigned according to the USPTO assignment records or assignment documents attached to this form in accordance with 37 CFR 3.73(b).

Please change the correspondence address for the application identified in the attached statement under 37 CFR 3.73(b) to:

☑ The address associated with Customer Number: 07733

OR

☐ Firm or Individual Name			
Address			
City		State	Zip
Country			
Telephone		Email	

Assignee Name and Address:

Intirion Corporation
2 Annette Road, Suite 3
Foxboro, Massachusetts 02035

A copy of this form, together with a statement under 37 CFR 3.73(b) (Form PTO/SB/96 or equivalent) is required to be filed in each application in which this form is used. The statement under 37 CFR 3.73(b) may be completed by one of the practitioners appointed in this form if the appointed practitioner is authorized to act on behalf of the assignee, and must identify the application in which this Power of Attorney is to be filed.

SIGNATURE of Assignee of Record

The individual whose signature and title is supplied below is authorized to act on behalf of the assignee

Signature	James J. Russo	Date	8/6/12
Name	James J. Russo	Telephone	
Title	General Manager		

This collection of information is required by 37 CFR 1.31, 1.32 and 1.33. The information is required to obtain or retain a benefit by the public which is to file (and by the USPTO to process) an application. Confidentiality is governed by 35 U.S.C. 122 and 37 CFR 1.11 and 1.14. This collection is estimated to take 3 minutes to complete, including gathering, preparing, and submitting the completed application form to the USPTO. Time will vary depending upon the individual case. Any comments on the amount of time you require to complete this form and/or suggestions for reducing this burden, should be sent to the Chief Information Officer, U.S. Patent and Trademark Office, U.S. Department of Commerce, P.O. Box 1450, Alexandria, VA 22313-1450. DO NOT SEND FEES OR COMPLETED FORMS TO THIS ADDRESS. **SEND TO: Commissioner for Patents, P.O. Box 1450, Alexandria, VA 22313-1450.**

If you need assistance in completing the form, call 1-800-PTO-9199 and select option 2.

Privacy Act Statement

The **Privacy Act of 1974 (P.L. 93-579)** requires that you be given certain information in connection with your submission of the attached form related to a patent application or patent. Accordingly, pursuant to the requirements of the Act, please be advised that: (1) the general authority for the collection of this information is 35 U.S.C. 2(b)(2); (2) furnishing of the information solicited is voluntary; and (3) the principal purpose for which the information is used by the U.S. Patent and Trademark Office is to process and/or examine your submission related to a patent application or patent. If you do not furnish the requested information, the U.S. Patent and Trademark Office may not be able to process and/or examine your submission, which may result in termination of proceedings or abandonment of the application or expiration of the patent.

The information provided by you in this form will be subject to the following routine uses:

1. The information on this form will be treated confidentially to the extent allowed under the Freedom of Information Act (5 U.S.C. 552) and the Privacy Act (5 U.S.C. 552a). Records from this system of records may be disclosed to the Department of Justice to determine whether the Freedom of Information Act requires disclosure of these records.
2. A record from this system of records may be disclosed, as a routine use, in the course of presenting evidence to a court, magistrate, or administrative tribunal, including disclosures to opposing counsel in the course of settlement negotiations.
3. A record in this system of records may be disclosed, as a routine use, to a Member of Congress submitting a request involving an individual, to whom the record pertains, when the individual has requested assistance from the Member with respect to the subject matter of the record.
4. A record in this system of records may be disclosed, as a routine use, to a contractor of the Agency having need for the information in order to perform a contract. Recipients of information shall be required to comply with the requirements of the Privacy Act of 1974, as amended, pursuant to 5 U.S.C. 552a(m).
5. A record related to an International Application filed under the Patent Cooperation Treaty in this system of records may be disclosed, as a routine use, to the International Bureau of the World Intellectual Property Organization, pursuant to the Patent Cooperation Treaty.
6. A record in this system of records may be disclosed, as a routine use, to another federal agency for purposes of National Security review (35 U.S.C. 181) and for review pursuant to the Atomic Energy Act (42 U.S.C. 218(c)).
7. A record from this system of records may be disclosed, as a routine use, to the Administrator, General Services, or his/her designee, during an inspection of records conducted by GSA as part of that agency's responsibility to recommend improvements in records management practices and programs, under authority of 44 U.S.C. 2904 and 2906. Such disclosure shall be made in accordance with the GSA regulations governing inspection of records for this purpose, and any other relevant (i.e., GSA or Commerce) directive. Such disclosure shall not be used to make determinations about individuals.
8. A record from this system of records may be disclosed, as a routine use, to the public after either publication of the application pursuant to 35 U.S.C. 122(b) or issuance of a patent pursuant to 35 U.S.C. 151. Further, a record may be disclosed, subject to the limitations of 37 CFR 1.14, as a routine use, to the public if the record was filed in an application which became abandoned or in which the proceedings were terminated and which application is referenced by either a published application, an application open to public inspections or an issued patent.
9. A record from this system of records may be disclosed, as a routine use, to a Federal, State, or local law enforcement agency, if the USPTO becomes aware of a violation or potential violation of law or regulation.

Under the Paperwork Reduction Act of 1995, no persons are required to respond to a collection of information unless it displays a valid OMB control number.

STATEMENT UNDER 37 CFR 3.73(c)

Applicant/Patent Owner: Gregory Allan Thomas Hall et al.

Application No./Patent No.: _____ Filed/Issue Date: Herewith

Titled: MULTIPLE LINKED APPLIANCE WITH AUXILIARY OUTLET

INTIRION CORPORATION, a CORPORATION

(Name of Assignee) (Type of Assignee, e.g., corporation, partnership, university, government agency, etc.)

states that, for the patent application/patent identified above, it is (choose **one** of options 1, 2, 3 or 4 below):

1. ☑ The assignee of the entire right, title, and interest.

2. ☐ An assignee of less than the entire right, title, and interest (check applicable box):

   ☐ The extent (by percentage) of its ownership interest is _____%. Additional Statement(s) by the owners holding the balance of the interest must be submitted to account for 100% of the ownership interest.

   ☐ There are unspecified percentages of ownership. The other parties, including inventors, who together own the entire right, title and interest are:

   Additional Statement(s) by the owner(s) holding the balance of the interest must be submitted to account for the entire right, title, and interest.

3. ☐ The assignee of an undivided interest in the entirety (a complete assignment from one of the joint inventors was made). The other parties, including inventors, who together own the entire right, title, and interest are:

   Additional Statement(s) by the owner(s) holding the balance of the interest must be submitted to account for the entire right, title, and interest.

4. ☐ The recipient, via a court proceeding or the like (*e.g.*, bankruptcy, probate), of an undivided interest in the entirety (a complete transfer of ownership interest was made). The certified document(s) showing the transfer is attached.

The interest identified in option 1, 2 or 3 above (not option 4) is evidenced by either (choose **one** of options A or B below):

A. ☑ An assignment from the inventor(s) of the patent application/patent identified above. The assignment was recorded in the United States Patent and Trademark Office at Reel _____, Frame _____, or for which a copy thereof is attached.

B. ☐ A chain of title from the inventor(s), of the patent application/patent identified above, to the current assignee as follows:

1. From: _____ To: _____

   The document was recorded in the United States Patent and Trademark Office at

   Reel _____, Frame _____, or for which a copy thereof is attached.

2. From: _____ To: _____

   The document was recorded in the United States Patent and Trademark Office at

   Reel _____, Frame _____, or for which a copy thereof is attached.

This collection of information is required by 37 CFR 3.73(b). The information is required to obtain or retain a benefit by the public which is to file (and by the USPTO to process) an application. Confidentiality is governed by 35 U.S.C. 122 and 37 CFR 1.11 and 1.14. This collection is estimated to take 12 minutes to complete, including gathering, preparing, and submitting the completed application form to the USPTO. Time will vary depending upon the individual case. Any comments on the amount of time you require to complete this form and/or suggestions for reducing this burden, should be sent to the Chief Information Officer, U.S. Patent and Trademark Office, U.S. Department of Commerce, P.O. Box 1450, Alexandria, VA 22313-1450. DO NOT SEND FEES OR COMPLETED FORMS TO THIS ADDRESS. **SEND TO: Commissioner for Patents, P.O. Box 1450, Alexandria, VA 22313-1450.**

If you need assistance in completing the form, call 1-800-PTO-9199 and select option 2.

Under the Paperwork Reduction Act of 1995, no persons are required to respond to a collection of information unless it displays a valid OMB control number.

STATEMENT UNDER 37 CFR 3.73(c)

3. From: _____ To: _____

The document was recorded in the United States Patent and Trademark Office at

Reel _____, Frame _____, or for which a copy thereof is attached.

4. From: _____ To: _____

The document was recorded in the United States Patent and Trademark Office at

Reel _____, Frame _____, or for which a copy thereof is attached.

5. From: _____ To: _____

The document was recorded in the United States Patent and Trademark Office at

Reel _____, Frame _____, or for which a copy thereof is attached.

6. From: _____ To: _____

The document was recorded in the United States Patent and Trademark Office at

Reel _____, Frame _____, or for which a copy thereof is attached.

☐ Additional documents in the chain of title are listed on a supplemental sheet(s).

☑ As required by 37 CFR 3.73(c)(1)(i), the documentary evidence of the chain of title from the original owner to the assignee was, or concurrently is being, submitted for recordation pursuant to 37 CFR 3.11.

[NOTE: A separate copy (i.e., a true copy of the original assignment document(s)) must be submitted to Assignment Division in accordance with 37 CFR Part 3, to record the assignment in the records of the USPTO. See MPEP 302.08]

The undersigned (whose title is supplied below) is authorized to act on behalf of the assignee.

/Ralph E. Jocke/	01/26/2022
Signature	Date
Ralph E. Jocke	31029
Printed or Typed Name	Title or Registration Number

Privacy Act Statement

The **Privacy Act of 1974 (P.L. 93-579)** requires that you be given certain information in connection with your submission of the attached form related to a patent application or patent. Accordingly, pursuant to the requirements of the Act, please be advised that: (1) the general authority for the collection of this information is 35 U.S.C. 2(b)(2); (2) furnishing of the information solicited is voluntary; and (3) the principal purpose for which the information is used by the U.S. Patent and Trademark Office is to process and/or examine your submission related to a patent application or patent. If you do not furnish the requested information, the U.S. Patent and Trademark Office may not be able to process and/or examine your submission, which may result in termination of proceedings or abandonment of the application or expiration of the patent.

The information provided by you in this form will be subject to the following routine uses:

1. The information on this form will be treated confidentially to the extent allowed under the Freedom of Information Act (5 U.S.C. 552) and the Privacy Act (5 U.S.C 552a). Records from this system of records may be disclosed to the Department of Justice to determine whether disclosure of these records is required by the Freedom of Information Act.
2. A record from this system of records may be disclosed, as a routine use, in the course of presenting evidence to a court, magistrate, or administrative tribunal, including disclosures to opposing counsel in the course of settlement negotiations.
3. A record in this system of records may be disclosed, as a routine use, to a Member of Congress submitting a request involving an individual, to whom the record pertains, when the individual has requested assistance from the Member with respect to the subject matter of the record.
4. A record in this system of records may be disclosed, as a routine use, to a contractor of the Agency having need for the information in order to perform a contract. Recipients of information shall be required to comply with the requirements of the Privacy Act of 1974, as amended, pursuant to 5 U.S.C. 552a(m).
5. A record related to an International Application filed under the Patent Cooperation Treaty in this system of records may be disclosed, as a routine use, to the International Bureau of the World Intellectual Property Organization, pursuant to the Patent Cooperation Treaty.
6. A record in this system of records may be disclosed, as a routine use, to another federal agency for purposes of National Security review (35 U.S.C. 181) and for review pursuant to the Atomic Energy Act (42 U.S.C. 218(c)).
7. A record from this system of records may be disclosed, as a routine use, to the Administrator, General Services, or his/her designee, during an inspection of records conducted by GSA as part of that agency's responsibility to recommend improvements in records management practices and programs, under authority of 44 U.S.C. 2904 and 2906. Such disclosure shall be made in accordance with the GSA regulations governing inspection of records for this purpose, and any other relevant (*i.e.*, GSA or Commerce) directive. Such disclosure shall not be used to make determinations about individuals.
8. A record from this system of records may be disclosed, as a routine use, to the public after either publication of the application pursuant to 35 U.S.C. 122(b) or issuance of a patent pursuant to 35 U.S.C. 151. Further, a record may be disclosed, subject to the limitations of 37 CFR 1.14, as a routine use, to the public if the record was filed in an application which became abandoned or in which the proceedings were terminated and which application is referenced by either a published application, an application open to public inspection or an issued patent.
9. A record from this system of records may be disclosed, as a routine use, to a Federal, State, or local law enforcement agency, if the USPTO becomes aware of a violation or potential violation of law or regulation.

For: U.S. and Foreign Rights
For: U.S. Application
By: Inventor

ASSIGNMENT OF INVENTION

In consideration of the payment by ASSIGNEE to ASSIGNOR of the sum of One Dollar ($1.00), the receipt of which is hereby acknowledged, and for other good and valuable consideration,

ASSIGNOR(s): Jim Estill

hereby sells, assigns and transfers to

ASSIGNEE: Intirion Corporation
10 Walpole Park South
Walpole MA 02081

and the successors, assigns and legal representatives of the ASSIGNEE the entire right, title and interest for the United States and its territorial possessions and in all foreign countries, including all rights to claim priority, in and to any and all improvements which are disclosed in:

(37 C.F.R. § 3.21) U.S. Patent Application No. 16/671,383 filed on November 1, 2019,

and any legal equivalent thereof in a foreign country, including the right to claim priority and, in and to, all Letters Patent to be obtained for said improvements by the above application or any continuation, division, renewal, or substitute thereof, and as to letters patent, any reissue, re-examination, supplemental examination, post-grant review, or inter partes review thereof.

ASSIGNOR hereby covenants that no assignment, sale, agreement or encumbrance has been or will be made or entered into which would conflict with this assignment.

ASSIGNOR further covenants that ASSIGNEE will, upon its request, be provided promptly with all pertinent facts and documents relating to said improvements and said Letters Patent and legal equivalents as may be known and accessible to ASSIGNOR and will testify as to the same in any interference, litigation or proceeding related thereto and will promptly execute and deliver to ASSIGNEE or its legal representatives any and all papers, instruments or affidavits required to apply for, obtain, maintain, issue and enforce said application, said improvements and said Letters Patent and said equivalents thereof which may be necessary or desirable to carry out the purposes thereof.

IN WITNESS WHEREOF, I have hereunto set my signature this 11th day of November 2021.

By: _____
Jim Estill
5070 Whitelaw Road
Guelph Ontario N1H 6Z9
Canada

For: U.S. and Foreign Rights
For: U.S. Application
By: Inventor

ASSIGNMENT OF INVENTION

In consideration of the payment by ASSIGNEE to ASSIGNOR of the sum of One Dollar ($1.00), the receipt of which is hereby acknowledged, and for other good and valuable consideration,

ASSIGNOR(s): Gregory Allan Thomas Hall

hereby sells, assigns and transfers to

ASSIGNEE: Intirion Corporation
10 Walpole Park South
Walpole MA 02081

and the successors, assigns and legal representatives of the ASSIGNEE the entire right, title and interest for the United States and its territorial possessions and in all foreign countries, including all rights to claim priority, in and to any and all improvements which are disclosed in:

(37 C.F.R. § 3.21) U.S. Patent Application No. 16/671,383 filed on November 1, 2019,

and any legal equivalent thereof in a foreign country, including the right to claim priority and, in and to, all Letters Patent to be obtained for said improvements by the above application or any continuation, division, renewal, or substitute thereof, and as to letters patent, any reissue, re-examination, supplemental examination, post-grant review, or inter partes review thereof.

ASSIGNOR hereby covenants that no assignment, sale, agreement or encumbrance has been or will be made or entered into which would conflict with this assignment.

ASSIGNOR further covenants that ASSIGNEE will, upon its request, be provided promptly with all pertinent facts and documents relating to said improvements and said Letters Patent and legal equivalents as may be known and accessible to ASSIGNOR and will testify as to the same in any interference, litigation or proceeding related thereto and will promptly execute and deliver to ASSIGNEE or its legal representatives any and all papers, instruments or affidavits required to apply for, obtain, maintain, issue and enforce said application, said improvements and said Letters Patent and said equivalents thereof which may be necessary or desirable to carry out the purposes thereof.

IN WITNESS WHEREOF, I have hereunto set my signature this 11th day of November 2021.

By: _____
Gregory Allan Thomas Hall
345 West Acres Drive
Guelph Ontario N1H 6Z9
Canada

Electronic Patent Application Fee Transmittal

Application Number:	
Filing Date:	
Title of Invention:	MULTIPLE LINKED APPLIANCE WITH AUXILIARY OUTLET
First Named Inventor/Applicant Name:	GREGORY ALLAN THOMAS HALL
Filer:	Ralph E. Jocke/Allison McDermott
Attorney Docket Number:	INT-1001 CIP 2 C 4

Filed as Small Entity

Filing Fees for Utility under 35 USC 111(a)

Description	Fee Code	Quantity	Amount	Sub-Total in USD($)
Basic Filing:				
UTILITY FILING FEE (ELECTRONIC FILING)	4011	1	80	80
UTILITY SEARCH FEE	2111	1	350	350
UTILITY EXAMINATION FEE	2311	1	400	400
Pages:				
Claims:				
CLAIMS IN EXCESS OF 20	2202	1	50	50
Miscellaneous-Filing:				
Petition:				

Description	Fee Code	Quantity	Amount	Sub-Total in USD($)
Patent-Appeals-and-Interference:				
Post-Allowance-and-Post-Issuance:				
Extension-of-Time:				
Miscellaneous:				
			Total in USD ($)	**880**

Electronic Acknowledgement Receipt

EFS ID:	45196336
Application Number:	17691628
International Application Number:	
Confirmation Number:	4539
Title of Invention:	MULTIPLE LINKED APPLIANCE WITH AUXILIARY OUTLET
First Named Inventor/Applicant Name:	GREGORY ALLAN THOMAS HALL
Customer Number:	07733
Filer:	Ralph E. Jocke/Allison McDermott
Filer Authorized By:	Ralph E. Jocke
Attorney Docket Number:	INT-1001 CIP 2 C 4
Receipt Date:	10-MAR-2022
Filing Date:	
Time Stamp:	15:39:01
Application Type:	Utility under 35 USC 111(a)

Payment information:

Submitted with Payment	yes
Payment Type	CARD
Payment was successfully received in RAM	$880
RAM confirmation Number	E202230F39474361
Deposit Account	100637
Authorized User	Allison McDermott

The Director of the USPTO is hereby authorized to charge indicated fees and credit any overpayment as follows:

37 CFR 1.16 (National application filing, search, and examination fees)

37 CFR 1.17 (Patent application and reexamination processing fees)

37 CFR 1.19 (Document supply fees)

37 CFR 1.21 (Miscellaneous fees and charges)

File Listing:

Document Number	Document Description	File Name	File Size(Bytes)/ Message Digest	Multi Part /.zip	Pages (if appl.)
1	Application Data Sheet	ADS.pdf	1824252 de66a841aa0426bb45bee5bc35842972e0df196f	no	10
Warnings:					
Information:					
2	Oath or Declaration filed	Declaration_Hallc.pdf	2552274 5da0c15f39be6ffa0fd204678652b325ca88dbb3	no	1
Warnings:					
Information:					
3	Oath or Declaration filed	Declaration_Estill.pdf	177087 2a53a3934779910078be17f4c55dedc7d0245009	no	1
Warnings:					
Information:					
4	Oath or Declaration filed	Substitute_Cunningham.pdf	191924 968feafef8a438a74f401c157edd30081491fa1f	no	3
Warnings:					
Information:					
5	Oath or Declaration filed	Substitute_Emma.pdf	190435 3ef8d34d39c8fbe891ae05b7af4f2e851c21a276	no	3
Warnings:					
Information:					
6	Oath or Declaration filed	Substitute_OBrien.pdf	191139 57f67d83f1e85ea8c703ebba9b662c4be4e7fd69	no	3
Warnings:					
Information:					

7	Drawings-only black and white line drawings	Drawings.pdf	9138997 2824bb1fba0dad298caaa31a2a3f9495e554daae	no	25
Warnings:					
Information:					
8		Specification.pdf	193181 6fc0e56604e3b53771908a99a1c62164c35db00e	yes	51

	Multipart Description/PDF files in .zip description		
	Document Description	**Start**	**End**
	Specification	1	40
	Claims	41	50
	Abstract	51	51

Warnings:					
Information:					
9	Power of Attorney	POA.pdf	277433 128ca863c62395f625f74d53fd41efc52932ae0e	no	3
Warnings:					
Information:					
10	Assignee showing of ownership per 37 CFR 3.73	Statement_373cc.pdf	2404010 b9c64817a83ebc7eff4a95b78d4cddf14be78f18	no	5
Warnings:					
Information:					
11	Fee Worksheet (SB06)	fee-info.pdf	46415 a465032d036e335ca598b74d1fe3c3308695bc3e	no	2
Warnings:					
Information:					
		Total Files Size (in bytes):	17187147		

This Acknowledgement Receipt evidences receipt on the noted date by the USPTO of the indicated documents, characterized by the applicant, and including page counts, where applicable. It serves as evidence of receipt similar to a Post Card, as described in MPEP 503.

New Applications Under 35 U.S.C. 111
If a new application is being filed and the application includes the necessary components for a filing date (see 37 CFR 1.53(b)-(d) and MPEP 506), a Filing Receipt (37 CFR 1.54) will be issued in due course and the date shown on this Acknowledgement Receipt will establish the filing date of the application.
National Stage of an International Application under 35 U.S.C. 371
If a timely submission to enter the national stage of an international application is compliant with the conditions of 35 U.S.C. 371 and other applicable requirements a Form PCT/DO/EO/903 indicating acceptance of the application as a national stage submission under 35 U.S.C. 371 will be issued in addition to the Filing Receipt, in due course.
New International Application Filed with the USPTO as a Receiving Office
If a new international application is being filed and the international application includes the necessary components for an international filing date (see PCT Article 11 and MPEP 1810), a Notification of the International Application Number and of the International Filing Date (Form PCT/RO/105) will be issued in due course, subject to prescriptions concerning national security, and the date shown on this Acknowledgement Receipt will establish the international filing date of the application.

Under the Paperwork Reduction Act of 1995, no persons are required to respond to a collection of information unless it contains a valid OMB control number.

Application Data Sheet 37 CFR 1.76	Attorney Docket Number	INT-1001 CIP 2 C 4
	Application Number	
Title of Invention	MULTIPLE LINKED APPLIANCE WITH AUXILIARY OUTLET	

The application data sheet is part of the provisional or nonprovisional application for which it is being submitted. The following form contains the bibliographic data arranged in a format specified by the United States Patent and Trademark Office as outlined in 37 CFR 1.76.
This document may be completed electronically and submitted to the Office in electronic format using the Electronic Filing System (EFS) or the document may be printed and included in a paper filed application.

Secrecy Order 37 CFR 5.2:

☐ Portions or all of the application associated with this Application Data Sheet may fall under a Secrecy Order pursuant to 37 CFR 5.2 (Paper filers only. Applications that fall under Secrecy Order may not be filed electronically.)

Inventor Information:

Inventor 1 Remove

Legal Name

Prefix	Given Name	Middle Name	Family Name	Suffix
	Gregory	Allan Thomas	Hall	

Residence Information (Select One) US Residency ● Non US Residency Active US Military Service

City	Guelph	Country of Residence i	CA

Mailing Address of Inventor:

Address 1	345 West Acres Drive		
Address 2			
City	Guelph	State/Province	ON
Postal Code	N1H 7B3	Country i	CA

Inventor 2 Remove

Legal Name

Prefix	Given Name	Middle Name	Family Name	Suffix
	Philip		Emma	

Residence Information (Select One) ● US Residency ◯ Non US Residency Active US Military Service

City	Topsfield	State/Province	MA	Country of Residence i	US

Mailing Address of Inventor:

Address 1	19 Ridgeview Road		
Address 2			
City	Topsfield	State/Province	MA
Postal Code	01983	Country i	US

Inventor 3 Remove

Legal Name

Prefix	Given Name	Middle Name	Family Name	Suffix
	Jim		Estill	

Under the Paperwork Reduction Act of 1995, no persons are required to respond to a collection of information unless it contains a valid OMB control number.

Application Data Sheet 37 CFR 1.76	Attorney Docket Number	INT-1001 CIP 2 C 4
	Application Number	
Title of Invention	MULTIPLE LINKED APPLIANCE WITH AUXILIARY OUTLET	

Residence Information (Select One) ○ US Residency ◉ Non US Residency Active US Military Service

City	Guelph	Country of Residence i	CA

Mailing Address of Inventor:

Address 1	5070 Whitelaw Road		
Address 2			
City	Guelph	**State/Province**	ON
Postal Code	N1H 6Z9	**Country** i	CA

Inventor 4 Remove

Legal Name

Prefix	Given Name	Middle Name	Family Name	Suffix
	Bryan	Stuart	Cunningham	

Residence Information (Select One) ○ US Residency ◉ Non US Residency Active US Military Service

City	Kitchener	Country of Residence i	CA

Mailing Address of Inventor:

Address 1	112 Benton Street		
Address 2			
City	Kitchener	**State/Province**	ON
Postal Code	N2G 3H6	**Country** i	CA

Inventor 5 Remove

Legal Name

Prefix	Given Name	Middle Name	Family Name	Suffix
	Dennis		O'Brien	

Residence Information (Select One) ○ US Residency ◉ Non US Residency Active US Military Service

City	Guelph	Country of Residence i	CA

Mailing Address of Inventor:

Address 1	5070 Whitelaw Road		
Address 2			
City	Guelph	**State/Province**	ON
Postal Code	N1H 6Z9	**Country** i	CA

All Inventors Must Be Listed - Additional Inventor Information blocks may be generated within this form by selecting the **Add** button. Add

Under the Paperwork Reduction Act of 1995, no persons are required to respond to a collection of information unless it contains a valid OMB control number.

Application Data Sheet 37 CFR 1.76	Attorney Docket Number	INT-1001 CIP 2 C 4
	Application Number	
Title of Invention	MULTIPLE LINKED APPLIANCE WITH AUXILIARY OUTLET	

Correspondence Information:

Enter either Customer Number or complete the Correspondence Information section below. For further information see 37 CFR 1.33(a).

☐ **An Address is being provided for the correspondence Information of this application.**

Customer Number	07733		
Email Address	iplaw@walkerandjocke.com	Add Email	Remove Email

Application Information:

Title of the Invention	MULTIPLE LINKED APPLIANCE WITH AUXILIARY OUTLET		
Attorney Docket Number	INT-1001 CIP 2 C 4	**Small Entity Status Claimed**	☒
Application Type	Nonprovisional		
Subject Matter	Utility		
Total Number of Drawing Sheets (if any)	25	**Suggested Figure for Publication (if any)**	1

Filing By Reference:

Only complete this section when filing an application by reference under 35 U.S.C. 111(c) and 37 CFR 1.57(a). Do not complete this section if application papers including a specification and any drawings are being filed. Any domestic benefit or foreign priority information must be provided in the appropriate section(s) below (i.e., "Domestic Benefit/National Stage Information" and "Foreign Priority Information").

For the purposes of a filing date under 37 CFR 1.53(b), the description and any drawings of the present application are replaced by this reference to the previously filed application, subject to conditions and requirements of 37 CFR 1.57(a).

Application number of the previously filed application	Filing date (YYYY-MM-DD)	Intellectual Property Authority or Country

Publication Information:

☐ Request Early Publication (Fee required at time of Request 37 CFR 1.219)

☐ **Request Not to Publish.** I hereby request that the attached application not be published under 35 U.S.C. 122(b) and certify that the invention disclosed in the attached application **has not and will not** be the subject of an application filed in another country, or under a multilateral international agreement, that requires publication at eighteen months after filing.

Representative Information:

Representative information should be provided for all practitioners having a power of attorney in the application. Providing this information in the Application Data Sheet does not constitute a power of attorney in the application (see 37 CFR 1.32).
Either enter Customer Number or complete the Representative Name section below. If both sections are completed the customer Number will be used for the Representative Information during processing.

Under the Paperwork Reduction Act of 1995, no persons are required to respond to a collection of information unless it contains a valid OMB control number.

Application Data Sheet 37 CFR 1.76	Attorney Docket Number	INT-1001 CIP 2 C 4
	Application Number	
Title of Invention	MULTIPLE LINKED APPLIANCE WITH AUXILIARY OUTLET	

Please Select One:	● Customer Number	US Patent Practitioner	◯ Limited Recognition (37 CFR 11.9)
Customer Number	07733		

Domestic Benefit/National Stage Information:

This section allows for the applicant to either claim benefit under 35 U.S.C. 119(e), 120, 121, 365(c), or 386(c) or indicate National Stage entry from a PCT application. Providing benefit claim information in the Application Data Sheet constitutes the specific reference required by 35 U.S.C. 119(e) or 120, and 37 CFR 1.78.
When referring to the current application, please leave the "Application Number" field blank.

Prior Application Status	Pending		Remove
Application Number	Continuity Type	Prior Application Number	Filing or 371(c) Date (YYYY-MM-DD)
	Continuation of	16671383	2019-11-01

Prior Application Status	Patented				Remove
Application Number	Continuity Type	Prior Application Number	Filing Date (YYYY-MM-DD)	Patent Number	Issue Date (YYYY-MM-DD)
16671383	Continuation in part of	15600118	2017-05-19	10495374	2019-12-03

Prior Application Status	Patented				Remove
Application Number	Continuity Type	Prior Application Number	Filing Date (YYYY-MM-DD)	Patent Number	Issue Date (YYYY-MM-DD)
15600118	Continuation of	15135883	2016-04-22	9664436	2017-05-30

Prior Application Status	Patented				Remove
Application Number	Continuity Type	Prior Application Number	Filing Date (YYYY-MM-DD)	Patent Number	Issue Date (YYYY-MM-DD)
15135883	Continuation in part of	14262290	2014-04-25	9657974	2017-05-23

Prior Application Status	Patented				Remove
Application Number	Continuity Type	Prior Application Number	Filing Date (YYYY-MM-DD)	Patent Number	Issue Date (YYYY-MM-DD)
14262290	Continuation in part of	12317632	2008-12-23	8742304	2014-06-03

Prior Application Status	Expired		Remove
Application Number	Continuity Type	Prior Application Number	Filing or 371(c) Date (YYYY-MM-DD)
12317632	Claims benefit of provisional	61009419	2007-12-28

Prior Application Status	Abandoned		Remove
Application Number	Continuity Type	Prior Application Number	Filing or 371(c) Date (YYYY-MM-DD)
16671383	Continuation in part of	15239378	2016-08-17

Under the Paperwork Reduction Act of 1995, no persons are required to respond to a collection of information unless it contains a valid OMB control number.

Application Data Sheet 37 CFR 1.76	Attorney Docket Number	INT-1001 CIP 2 C 4
	Application Number	
Title of Invention	MULTIPLE LINKED APPLIANCE WITH AUXILIARY OUTLET	

Prior Application Status	Expired		Remove
Application Number	Continuity Type	Prior Application Number	Filing or 371(c) Date (YYYY-MM-DD)
15239378	Claims benefit of provisional	62211765	2015-08-29
Prior Application Status	Expired		Remove
Application Number	Continuity Type	Prior Application Number	Filing or 371(c) Date (YYYY-MM-DD)
15239378	Claims benefit of provisional	62262954	2015-12-04
Additional Domestic Benefit/National Stage Data may be generated within this form by selecting the **Add** button.			Add

Foreign Priority Information:

This section allows for the applicant to claim priority to a foreign application. Providing this information in the application data sheet constitutes the claim for priority as required by 35 U.S.C. 119(b) and 37 CFR 1.55. When priority is claimed to a foreign application that is eligible for retrieval under the priority document exchange program (PDX)[i] the information will be used by the Office to automatically attempt retrieval pursuant to 37 CFR 1.55(i)(1) and (2). Under the PDX program, applicant bears the ultimate responsibility for ensuring that a copy of the foreign application is received by the Office from the participating foreign intellectual property office, or a certified copy of the foreign priority application is filed, within the time period specified in 37 CFR 1.55(g)(1).

Remove

Application Number	Country[i]	Filing Date (YYYY-MM-DD)	Access Code[i] (if applicable)

Additional Foreign Priority Data may be generated within this form by selecting the **Add** button. Add

Statement under 37 CFR 1.55 or 1.78 for AIA (First Inventor to File) Transition Applications

☒ This application (1) claims priority to or the benefit of an application filed before March 16, 2013 and (2) also contains, or contained at any time, a claim to a claimed invention that has an effective filing date on or after March 16, 2013.
NOTE: By providing this statement under 37 CFR 1.55 or 1.78, this application, with a filing date on or after March 16, 2013, will be examined under the first inventor to file provisions of the AIA.

Under the Paperwork Reduction Act of 1995, no persons are required to respond to a collection of information unless it contains a valid OMB control number.

Application Data Sheet 37 CFR 1.76	Attorney Docket Number	INT-1001 CIP 2 C 4
	Application Number	
Title of Invention	MULTIPLE LINKED APPLIANCE WITH AUXILIARY OUTLET	

Authorization or Opt-Out of Authorization to Permit Access:

When this Application Data Sheet is properly signed and filed with the application, applicant has provided written authority to permit a participating foreign intellectual property (IP) office access to the instant application-as-filed (see paragraph A in subsection 1 below) and the European Patent Office (EPO) access to any search results from the instant application (see paragraph B in subsection 1 below).

Should applicant choose not to provide an authorization identified in subsection 1 below, applicant **must opt-out** of the authorization by checking the corresponding box A or B or both in subsection 2 below.

NOTE: This section of the Application Data Sheet is **ONLY** reviewed and processed with the **INITIAL** filing of an application. After the initial filing of an application, an Application Data Sheet cannot be used to provide or rescind authorization for access by a foreign IP office(s). Instead, Form PTO/SB/39 or PTO/SB/69 must be used as appropriate.

1. Authorization to Permit Access by a Foreign Intellectual Property Office(s)

A. Priority Document Exchange (PDX) - Unless box A in subsection 2 (opt-out of authorization) is checked, the undersigned hereby **grants the USPTO authority** to provide the European Patent Office (EPO), the Japan Patent Office (JPO), the Korean Intellectual Property Office (KIPO), the State Intellectual Property Office of the People's Republic of China (SIPO), the World Intellectual Property Organization (WIPO), and any other foreign intellectual property office participating with the USPTO in a bilateral or multilateral priority document exchange agreement in which a foreign application claiming priority to the instant patent application is filed, access to: (1) the instant patent application-as-filed and its related bibliographic data, (2) any foreign or domestic application to which priority or benefit is claimed by the instant application and its related bibliographic data, and (3) the date of filing of this Authorization. See 37 CFR 1.14(h)(1).

B. Search Results from U.S. Application to EPO - Unless box B in subsection 2 (opt-out of authorization) is checked, the undersigned hereby **grants the USPTO authority** to provide the EPO access to the bibliographic data and search results from the instant patent application when a European patent application claiming priority to the instant patent application is filed. See 37 CFR 1.14(h)(2).

The applicant is reminded that the EPO's Rule 141(1) EPC (European Patent Convention) requires applicants to submit a copy of search results from the instant application without delay in a European patent application that claims priority to the instant application.

2. Opt-Out of Authorizations to Permit Access by a Foreign Intellectual Property Office(s)

☐ A. Applicant **DOES NOT** authorize the USPTO to permit a participating foreign IP office access to the instant application-as-filed. If this box is checked, the USPTO will not be providing a participating foreign IP office with any documents and information identified in subsection 1A above.

☐ B. Applicant **DOES NOT** authorize the USPTO to transmit to the EPO any search results from the instant patent application. If this box is checked, the USPTO will not be providing the EPO with search results from the instant application.

NOTE: Once the application has published or is otherwise publicly available, the USPTO may provide access to the application in accordance with 37 CFR 1.14.

Under the Paperwork Reduction Act of 1995, no persons are required to respond to a collection of information unless it contains a valid OMB control number.

Application Data Sheet 37 CFR 1.76	Attorney Docket Number	INT-1001 CIP 2 C 4
	Application Number	
Title of Invention	MULTIPLE LINKED APPLIANCE WITH AUXILIARY OUTLET	

Applicant Information:

Providing assignment information in this section does not substitute for compliance with any requirement of part 3 of Title 37 of CFR to have an assignment recorded by the Office.

Applicant 1 Remove

If the applicant is the inventor (or the remaining joint inventor or inventors under 37 CFR 1.45), this section should not be completed. The information to be provided in this section is the name and address of the legal representative who is the applicant under 37 CFR 1.43; or the name and address of the assignee, person to whom the inventor is under an obligation to assign the invention, or person who otherwise shows sufficient proprietary interest in the matter who is the applicant under 37 CFR 1.46. If the applicant is an applicant under 37 CFR 1.46 (assignee, person to whom the inventor is obligated to assign, or person who otherwise shows sufficient proprietary interest) together with one or more joint inventors, then the joint inventor or inventors who are also the applicant should be identified in this section. Clear

● Assignee	Legal Representative under 35 U.S.C. 117	Joint Inventor
Person to whom the inventor is obligated to assign.	Person who shows sufficient proprietary interest	

If applicant is the legal representative, indicate the authority to file the patent application, the inventor is:

Name of the Deceased or Legally Incapacitated Inventor:

If the Applicant is an Organization check here. ☒

Organization Name	Intirion Corporation		
Mailing Address Information For Applicant:			
Address 1	10 Walpole Park South		
Address 2			
City	Walpole	**State/Province**	MA
Country	US	Postal Code	02081
Phone Number		Fax Number	
Email Address			

Additional Applicant Data may be generated within this form by selecting the Add button. Add

Assignee Information including Non-Applicant Assignee Information:

Providing assignment information in this section does not substitute for compliance with any requirement of part 3 of Title 37 of CFR to have an assignment recorded by the Office.

Under the Paperwork Reduction Act of 1995, no persons are required to respond to a collection of information unless it contains a valid OMB control number.

Application Data Sheet 37 CFR 1.76	Attorney Docket Number	INT-1001 CIP 2 C 4
	Application Number	
Title of Invention	MULTIPLE LINKED APPLIANCE WITH AUXILIARY OUTLET	

Assignee 1

Complete this section if assignee information, including non-applicant assignee information, is desired to be included on the patent application publication. An assignee-applicant identified in the "Applicant Information" section will appear on the patent application publication as an applicant. For an assignee-applicant, complete this section only if identification as an assignee is also desired on the patent application publication.

Remove

If the Assignee or Non-Applicant Assignee is an Organization check here. ☐

Prefix	**Given Name**	Middle Name	**Family Name**	Suffix

Mailing Address Information For Assignee including Non-Applicant Assignee:

Address 1			
Address 2			
City		**State/Province**	
Country i		Postal Code	
Phone Number		Fax Number	
Email Address			

Additional Assignee or Non-Applicant Assignee Data may be generated within this form by selecting the Add button. Add

Signature:

Remove

NOTE: This Application Data Sheet must be signed in accordance with 37 CFR 1.33(b). **However, if this Application Data Sheet is submitted with the INITIAL filing of the application and either box A or B is not checked in subsection 2 of the "Authorization or Opt-Out of Authorization to Permit Access" section, then this form must also be signed in accordance with 37 CFR 1.14(c).**

This Application Data Sheet **must** be signed by a patent practitioner if one or more of the applicants is a **juristic entity** (e.g., corporation or association). If the applicant is two or more joint inventors, this form must be signed by a patent practitioner, **all** joint inventors who are the applicant, or one or more joint inventor-applicants who have been given power of attorney (e.g., see USPTO Form PTO/AIA/81) on behalf of **all** joint inventor-applicants.

See 37 CFR 1.4(d) for the manner of making signatures and certifications.

Signature	/Ralph E. Jocke/			Date (YYYY-MM-DD)	2022-03-09
First Name	Ralph	Last Name	Jocke	Registration Number	31029

Additional Signature may be generated within this form by selecting the Add button. Add

Application Data Sheet 37 CFR 1.76	Attorney Docket Number	INT-1001 CIP 2 C 4
	Application Number	
Title of Invention	MULTIPLE LINKED APPLIANCE WITH AUXILIARY OUTLET	

This collection of information is required by 37 CFR 1.76. The information is required to obtain or retain a benefit by the public which is to file (and by the USPTO to process) an application. Confidentiality is governed by 35 U.S.C. 122 and 37 CFR 1.14. This collection is estimated to take 23 minutes to complete, including gathering, preparing, and submitting the completed application data sheet form to the USPTO. Time will vary depending upon the individual case. Any comments on the amount of time you require to complete this form and/or suggestions for reducing this burden, should be sent to the Chief Information Officer, U.S. Patent and Trademark Office, U.S. Department of Commerce, P.O. Box 1450, Alexandria, VA 22313-1450. DO NOT SEND FEES OR COMPLETED FORMS TO THIS ADDRESS. **SEND TO: Commissioner for Patents, P.O. Box 1450, Alexandria, VA 22313-1450.**

Privacy Act Statement

The Privacy Act of 1974 (P.L. 93-579) requires that you be given certain information in connection with your submission of the attached form related to a patent application or patent. Accordingly, pursuant to the requirements of the Act, please be advised that: (1) the general authority for the collection of this information is 35 U.S.C. 2(b)(2); (2) furnishing of the information solicited is voluntary; and (3) the principal purpose for which the information is used by the U.S. Patent and Trademark Office is to process and/or examine your submission related to a patent application or patent. If you do not furnish the requested information, the U.S. Patent and Trademark Office may not be able to process and/or examine your submission, which may result in termination of proceedings or abandonment of the application or expiration of the patent.

The information provided by you in this form will be subject to the following routine uses:

1 The information on this form will be treated confidentially to the extent allowed under the Freedom of Information Act (5 U.S.C. 552) and the Privacy Act (5 U.S.C. 552a). Records from this system of records may be disclosed to the Department of Justice to determine whether the Freedom of Information Act requires disclosure of these records.

2. A record from this system of records may be disclosed, as a routine use, in the course of presenting evidence to a court, magistrate, or administrative tribunal, including disclosures to opposing counsel in the course of settlement negotiations.

3 A record in this system of records may be disclosed, as a routine use, to a Member of Congress submitting a request involving an individual, to whom the record pertains, when the individual has requested assistance from the Member with respect to the subject matter of the record.

4. A record in this system of records may be disclosed, as a routine use, to a contractor of the Agency having need for the information in order to perform a contract. Recipients of information shall be required to comply with the requirements of the Privacy Act of 1974, as amended, pursuant to 5 U.S.C. 552a(m).

5. A record related to an International Application filed under the Patent Cooperation Treaty in this system of records may be disclosed, as a routine use, to the International Bureau of the World Intellectual Property Organization, pursuant to the Patent CooperationTreaty.

6. A record in this system of records may be disclosed, as a routine use, to another federal agency for purposes of National Security review (35 U.S.C. 181) and for review pursuant to the Atomic Energy Act (42 U.S.C. 218(c)).

7. A record from this system of records may be disclosed, as a routine use, to the Administrator, General Services, or his/her designee, during an inspection of records conducted by GSA as part of that agency's responsibility to recommend improvements in records management practices and programs, under authority of 44 U.S.C. 2904 and 2906. Such disclosure shall be made in accordance with the GSA regulations governing inspection of records for this purpose, and any other relevant (i.e., GSA or Commerce) directive. Such disclosure shall not be used to make determinations about individuals.

8. A record from this system of records may be disclosed, as a routine use, to the public after either publication of the application pursuant to 35 U.S.C. 122(b) or issuance of a patent pursuant to 35 U.S.C. 151. Further, a record may be disclosed, subject to the limitations of 37 CFR 1.14, as a routine use, to the public if the record was filed in an application which became abandoned or in which the proceedings were terminated and which application is referenced by either a published application, an application open to public inspections or an issued patent.

9. A record from this system of records may be disclosed, as a routine use, to a Federal, State, or local law enforcement agency, if the USPTO becomes aware of a violation or potential violation of law or regulation.

DECLARATION (37 CFR 1.63) FOR UTILITY OR DESIGN APPLICATION USING AN APPLICATION DATA SHEET (37 CFR 1.76)

Title of Invention	MULTIPLE LINKED APPLIANCE WITH AUXILIARY OUTLET

As a below named inventor, I hereby declare that:

This declaration is directed to:		The attached application, or United States application or PCT international application number 16/671,383 filed on November 1, 2019
	x	

The above-identified application was made or authorized to be made by me.

I believe I am the original inventor or an original joint inventor of a claimed invention in the application.

I hereby state that I have reviewed and understand the contents of the above-identified application including the claim(s).

I acknowledge the continuous duty to disclose to the U.S. Patent and Trademark Office information which is material to patentability as defined in 37 CFR 1.56, including for continuation-in-part applications, material information which became available between the filing date of the prior application and the national or PCT international filing date of the continuation-in-part application.

I hereby acknowledge that any willful false statement made in this declaration is punishable under 18 U.S.C. 1001 by fine or imprisonment of not more than five (5) years, or both.

WARNING:

Petitioner/applicant is cautioned to avoid submitting personal information in documents filed in a patent application that may contribute to identity theft. Personal information such as social security numbers, bank account numbers, or credit card numbers (other than a check or credit card authorization form PTO-2038 submitted for payment purposes) is never required by the USPTO to support a petition or an application. If this type of personal information is included in documents submitted to the USPTO, petitioners/applicants should consider redacting such personal information from the documents before submitting them to the USPTO. Petitioner/applicant is advised that the record of a patent application is available to the public after publication of the application (unless a non-publication request in compliance with 37 CFR 1.213(a) is made in the application) or issuance of a patent. Furthermore, the record from an abandoned application may also be available to the public if the application is referenced in a published application or an issued patent (see 37 CFR 1.14). Checks and credit card authorization forms PTO-2038 submitted for payment purposes are not retained in the application file and therefore are not publicly available.

LEGAL NAME OF INVENTOR

Inventor: Gregory Allan Thomas Hall Date: November 11, 2021

Signature: _____

Note: An application data sheet (PTO/SB/14 or equivalent), including naming the entire inventive entity, must accompany this form or must have been previously filed.

DECLARATION (37 CFR 1.63) FOR UTILITY OR DESIGN APPLICATION USING AN APPLICATION DATA SHEET (37 CFR 1.76)

Title of Invention	MULTIPLE LINKED APPLIANCE WITH AUXILIARY OUTLET

As a below named inventor, I hereby declare that:

This declaration is directed to:		The attached application, or United States application or PCT international application number 16/671,383 filed on November 1, 2019
	x	

The above-identified application was made or authorized to be made by me.

I believe I am the original inventor or an original joint inventor of a claimed invention in the application.

I hereby state that I have reviewed and understand the contents of the above-identified application including the claim(s).

I acknowledge the continuous duty to disclose to the U.S. Patent and Trademark Office information which is material to patentability as defined in 37 CFR 1.56, including for continuation-in-part applications, material information which became available between the filing date of the prior application and the national or PCT international filing date of the continuation-in-part application.

I hereby acknowledge that any willful false statement made in this declaration is punishable under 18 U.S.C. 1001 by fine or imprisonment of not more than five (5) years, or both.

WARNING:

Petitioner/applicant is cautioned to avoid submitting personal information in documents filed in a patent application that may contribute to identity theft. Personal information such as social security numbers, bank account numbers, or credit card numbers (other than a check or credit card authorization form PTO-2038 submitted for payment purposes) is never required by the USPTO to support a petition or an application. If this type of personal information is included in documents submitted to the USPTO, petitioners/applicants should consider redacting such personal information from the documents before submitting them to the USPTO. Petitioner/applicant is advised that the record of a patent application is available to the public after publication of the application (unless a non-publication request in compliance with 37 CFR 1.213(a) is made in the application) or issuance of a patent. Furthermore, the record from an abandoned application may also be available to the public if the application is referenced in a published application or an issued patent (see 37 CFR 1.14). Checks and credit card authorization forms PTO-2038 submitted for payment purposes are not retained in the application file and therefore are not publicly available.

LEGAL NAME OF INVENTOR

Inventor: Jim Estill Date: November 11, 2021

Signature: _____

Note: An application data sheet (PTO/SB/14 or equivalent), including naming the entire inventive entity, must accompany this form or must have been previously filed.

PTO/AIA/02 (07-13)
Approved for use through 11/30/2020. OMB 0651-0032
U.S. Patent and Trademark Office; U.S. DEPARTMENT OF COMMERCE
Under the Paperwork Reduction Act of 1995, no persons are required to respond to a collection of information unless it displays a valid OMB control number.

SUBSTITUTE STATEMENT IN LIEU OF AN OATH OR DECLARATION FOR UTILITY OR DESIGN PATENT APPLICATION (35 U.S.C. 115(d) AND 37 CFR 1.64)

Title of Invention	MULTIPLE LINKED APPLIANCE WITH AUXILIARY OUTLET

This statement is directed to:

☐ The attached application,

OR

☒ United States application or PCT international application number 16/671,383 filed on NOVEMBER 1, 2019.

LEGAL NAME of inventor to whom this substitute statement applies:

(*E.g.*, Given Name (first and middle (if any)) and Family Name or Surname)

BRYAN STUART CUNNINGHAM

Residence (except for a deceased or legally incapacitated inventor):

City	State	Country
KITCHENER	ON	CANADA

Mailing Address (except for a deceased or legally incapacitated inventor):

112 BENTON STREET

City	State	Zip	Country
KITCHENER	ON	N2G 3H6	CANADA

I believe the above-named inventor or joint inventor to be the original inventor or an original joint inventor of a claimed invention in the application.

The above-identified application was made or authorized to be made by me.

I hereby acknowledge that any willful false statement made in this statement is punishable under 18 U.S.C. 1001 by fine or imprisonment of not more than five (5) years, or both.

Relationship to the inventor to whom this substitute statement applies:

- ☐ Legal Representative (for deceased or legally incapacitated inventor only),
- ☐ Assignee,
- ☒ Person to whom the inventor is under an obligation to assign,
- ☐ Person who otherwise shows a sufficient proprietary interest in the matter (petition under 37 CFR 1.46 is required), or
- ☐ Joint Inventor.

This collection of information is required by 35 U.S.C. 115 and 37 CFR 1.63. The information is required to obtain or retain a benefit by the public which is to file (and by the USPTO to process) an application. Confidentiality is governed by 35 U.S.C. 122 and 37 CFR 1.11 and 1.14. This collection is estimated to take 1 minute to complete, including gathering, preparing, and submitting the completed application form to the USPTO. Time will vary depending upon the individual case. Any comments on the amount of time you require to complete this form and/or suggestions for reducing this burden, should be sent to the Chief Information Officer, U.S. Patent and Trademark Office, U.S. Department of Commerce, P.O. Box 1450, Alexandria, VA 22313-1450. DO NOT SEND FEES OR COMPLETED FORMS TO THIS ADDRESS. **SEND TO: Commissioner for Patents, P.O. Box 1450, Alexandria, VA 22313-1450.**

If you need assistance in completing the form, call 1-800-PTO-9199 and select option 2.

Under the Paperwork Reduction Act of 1995, no persons are required to respond to a collection of information unless it displays a valid OMB control number.

SUBSTITUTE STATEMENT

Circumstances permitting execution of this substitute statement:

- [ ] Inventor is deceased,
- [ ] Inventor is under legal incapacity,
- [ ] Inventor cannot be found or reached after diligent effort, or
- [x] Inventor has refused to execute the oath or declaration under 37 CFR 1.63.

If there are joint inventors, please check the appropriate box below:

- [x] An application data sheet under 37 CFR 1.76 (PTO/AIA/14 or equivalent) naming the entire inventive entity has been or is currently submitted.

OR

- [ ] An application data sheet under 37 CFR 1.76 (PTO/AIA/14 or equivalent) has not been submitted. Thus, a Substitute Statement Supplemental Sheet (PTO/AIA/11 or equivalent) naming the entire inventive entity and providing inventor information is attached. See 37 CFR 1.64(b).

WARNING:

Petitioner/applicant is cautioned to avoid submitting personal information in documents filed in a patent application that may contribute to identity theft. Personal information such as social security numbers, bank account numbers, or credit card numbers (other than a check or credit card authorization form PTO-2038 submitted for payment purposes) is never required by the USPTO to support a petition or an application. If this type of personal information is included in documents submitted to the USPTO, petitioners/applicants should consider redacting such personal information from the documents before submitting them to the USPTO. Petitioner/applicant is advised that the record of a patent application is available to the public after publication of the application (unless a non-publication request in compliance with 37 CFR 1.213(a) is made in the application) or issuance of a patent. Furthermore, the record from an abandoned application may also be available to the public if the application is referenced in a published application or an issued patent (see 37 CFR 1.14). Checks and credit card authorization forms PTO-2038 submitted for payment purposes are not retained in the application file and therefore are not publicly available.

PERSON EXECUTING THIS SUBSTITUTE STATEMENT:

Name: Ralph E. Jocke | Date (Optional):

Signature:

APPLICANT NAME AND TITLE OF PERSON EXECUTING THIS SUBSTITUTE STATEMENT:

If the applicant is a juristic entity, list the applicant name and the title of the signer:

Applicant Name: INITIRION CORPORATION

Title of Person Executing This Substitute Statement: ATTORNEY

The signer, whose title is supplied above, is authorized to act on behalf of the applicant.

Residence of the signer (unless provided in an application data sheet, PTO/AIA/14 or equivalent):

City MEDINA | State OH | Country US

Mailing Address of the signer (unless provided in an application data sheet, PTO/AIA/14 or equivalent)

231 SOUTH BROADWAY

City MEDINA | State OH | Zip 44256 | Country US

Note: Use an additional PTO/AIA/02 form for each inventor who is deceased, legally incapacitated, cannot be found or reached after diligent effort, or has refused to execute the oath or declaration under 37 CFR 1.63.

Privacy Act Statement

The **Privacy Act of 1974 (P.L. 93-579)** requires that you be given certain information in connection with your submission of the attached form related to a patent application or patent. Accordingly, pursuant to the requirements of the Act, please be advised that: (1) the general authority for the collection of this information is 35 U.S.C. 2(b)(2); (2) furnishing of the information solicited is voluntary; and (3) the principal purpose for which the information is used by the U.S. Patent and Trademark Office is to process and/or examine your submission related to a patent application or patent. If you do not furnish the requested information, the U.S. Patent and Trademark Office may not be able to process and/or examine your submission, which may result in termination of proceedings or abandonment of the application or expiration of the patent.

The information provided by you in this form will be subject to the following routine uses:

1. The information on this form will be treated confidentially to the extent allowed under the Freedom of Information Act (5 U.S.C. 552) and the Privacy Act (5 U.S.C 552a). Records from this system of records may be disclosed to the Department of Justice to determine whether disclosure of these records is required by the Freedom of Information Act.
2. A record from this system of records may be disclosed, as a routine use, in the course of presenting evidence to a court, magistrate, or administrative tribunal, including disclosures to opposing counsel in the course of settlement negotiations.
3. A record in this system of records may be disclosed, as a routine use, to a Member of Congress submitting a request involving an individual, to whom the record pertains, when the individual has requested assistance from the Member with respect to the subject matter of the record.
4. A record in this system of records may be disclosed, as a routine use, to a contractor of the Agency having need for the information in order to perform a contract. Recipients of information shall be required to comply with the requirements of the Privacy Act of 1974, as amended, pursuant to 5 U.S.C. 552a(m).
5. A record related to an International Application filed under the Patent Cooperation Treaty in this system of records may be disclosed, as a routine use, to the International Bureau of the World Intellectual Property Organization, pursuant to the Patent Cooperation Treaty.
6. A record in this system of records may be disclosed, as a routine use, to another federal agency for purposes of National Security review (35 U.S.C. 181) and for review pursuant to the Atomic Energy Act (42 U.S.C. 218(c)).
7. A record from this system of records may be disclosed, as a routine use, to the Administrator, General Services, or his/her designee, during an inspection of records conducted by GSA as part of that agency's responsibility to recommend improvements in records management practices and programs, under authority of 44 U.S.C. 2904 and 2906. Such disclosure shall be made in accordance with the GSA regulations governing inspection of records for this purpose, and any other relevant (*i.e.*, GSA or Commerce) directive. Such disclosure shall not be used to make determinations about individuals.
8. A record from this system of records may be disclosed, as a routine use, to the public after either publication of the application pursuant to 35 U.S.C. 122(b) or issuance of a patent pursuant to 35 U.S.C. 151. Further, a record may be disclosed, subject to the limitations of 37 CFR 1.14, as a routine use, to the public if the record was filed in an application which became abandoned or in which the proceedings were terminated and which application is referenced by either a published application, an application open to public inspection or an issued patent.
9. A record from this system of records may be disclosed, as a routine use, to a Federal, State, or local law enforcement agency, if the USPTO becomes aware of a violation or potential violation of law or regulation.

PTO/AIA/02 (07-13)
Approved for use through 11/30/2020. OMB 0651-0032
U.S. Patent and Trademark Office; U.S. DEPARTMENT OF COMMERCE
Under the Paperwork Reduction Act of 1995, no persons are required to respond to a collection of information unless it displays a valid OMB control number.

SUBSTITUTE STATEMENT IN LIEU OF AN OATH OR DECLARATION FOR UTILITY OR DESIGN PATENT APPLICATION (35 U.S.C. 115(d) AND 37 CFR 1.64)

Title of Invention: MULTIPLE LINKED APPLIANCE WITH AUXILIARY OUTLET

This statement is directed to:

☐ The attached application,

OR

☒ United States application or PCT international application number 16/671,383 filed on NOVEMBER 1, 2019.

LEGAL NAME of inventor to whom this substitute statement applies:

(*E.g.*, Given Name (first and middle (if any)) and Family Name or Surname)

PHILIP EMMA ✓

Residence (except for a deceased or legally incapacitated inventor):

City	State	Country
TOPSFIELD	MA	US

Mailing Address (except for a deceased or legally incapacitated inventor):

19 RIDGEVIEW ROAD

City	State	Zip	Country
TOPSFIELD	MA	01983	US

I believe the above-named inventor or joint inventor to be the original inventor or an original joint inventor of a claimed invention in the application.

The above-identified application was made or authorized to be made by me.

I hereby acknowledge that any willful false statement made in this statement is punishable under 18 U.S.C. 1001 by fine or imprisonment of not more than five (5) years, or both.

Relationship to the inventor to whom this substitute statement applies:

- ☐ Legal Representative (for deceased or legally incapacitated inventor only),
- ☐ Assignee,
- ☒ Person to whom the inventor is under an obligation to assign,
- ☐ Person who otherwise shows a sufficient proprietary interest in the matter (petition under 37 CFR 1.46 is required), or
- ☐ Joint Inventor.

This collection of information is required by 35 U.S.C. 115 and 37 CFR 1.63. The information is required to obtain or retain a benefit by the public which is to file (and by the USPTO to process) an application. Confidentiality is governed by 35 U.S.C. 122 and 37 CFR 1.11 and 1.14. This collection is estimated to take 1 minute to complete, including gathering, preparing, and submitting the completed application form to the USPTO. Time will vary depending upon the individual case. Any comments on the amount of time you require to complete this form and/or suggestions for reducing this burden, should be sent to the Chief Information Officer, U.S. Patent and Trademark Office, U.S. Department of Commerce, P.O. Box 1450, Alexandria, VA 22313-1450. DO NOT SEND FEES OR COMPLETED FORMS TO THIS ADDRESS. **SEND TO: Commissioner for Patents, P.O. Box 1450, Alexandria, VA 22313-1450.**

If you need assistance in completing the form, call 1-800-PTO-9199 and select option 2.

Approved for use through 11/30/2020. OMB 0651-0032
U.S. Patent and Trademark Office; U.S. DEPARTMENT OF COMMERCE
Under the Paperwork Reduction Act of 1995, no persons are required to respond to a collection of information unless it displays a valid OMB control number.

SUBSTITUTE STATEMENT

Circumstances permitting execution of this substitute statement:

- [ ] Inventor is deceased,
- [ ] Inventor is under legal incapacity,
- [x] Inventor cannot be found or reached after diligent effort, or
- [ ] Inventor has refused to execute the oath or declaration under 37 CFR 1.63.

If there are joint inventors, please check the appropriate box below:

- [x] An application data sheet under 37 CFR 1.76 (PTO/AIA/14 or equivalent) naming the entire inventive entity has been or is currently submitted.

OR

- [ ] An application data sheet under 37 CFR 1.76 (PTO/AIA/14 or equivalent) has not been submitted. Thus, a Substitute Statement Supplemental Sheet (PTO/AIA/11 or equivalent) naming the entire inventive entity and providing inventor information is attached. See 37 CFR 1.64(b).

WARNING:

Petitioner/applicant is cautioned to avoid submitting personal information in documents filed in a patent application that may contribute to identity theft. Personal information such as social security numbers, bank account numbers, or credit card numbers (other than a check or credit card authorization form PTO-2038 submitted for payment purposes) is never required by the USPTO to support a petition or an application. If this type of personal information is included in documents submitted to the USPTO, petitioners/applicants should consider redacting such personal information from the documents before submitting them to the USPTO. Petitioner/applicant is advised that the record of a patent application is available to the public after publication of the application (unless a non-publication request in compliance with 37 CFR 1.213(a) is made in the application) or issuance of a patent. Furthermore, the record from an abandoned application may also be available to the public if the application is referenced in a published application or an issued patent (see 37 CFR 1.14). Checks and credit card authorization forms PTO-2038 submitted for payment purposes are not retained in the application file and therefore are not publicly available.

PERSON EXECUTING THIS SUBSTITUTE STATEMENT:

Name: Ralph E. Jocke | Date (Optional):

Signature:

APPLICANT NAME AND TITLE OF PERSON EXECUTING THIS SUBSTITUTE STATEMENT:

If the applicant is a juristic entity, list the applicant name and the title of the signer:

Applicant Name: INITIRION CORPORATION

Title of Person Executing This Substitute Statement: ATTORNEY

The signer, whose title is supplied above, is authorized to act on behalf of the applicant.

Residence of the signer (unless provided in an application data sheet, PTO/AIA/14 or equivalent):

City MEDINA | State OH | Country US

Mailing Address of the signer (unless provided in an application data sheet, PTO/AIA/14 or equivalent)

231 SOUTH BROADWAY

City MEDINA | State OH | Zip 44256 | Country US

Note: Use an additional PTO/AIA/02 form for each inventor who is deceased, legally incapacitated, cannot be found or reached after diligent effort, or has refused to execute the oath or declaration under 37 CFR 1.63.

Privacy Act Statement

The **Privacy Act of 1974 (P.L. 93-579)** requires that you be given certain information in connection with your submission of the attached form related to a patent application or patent. Accordingly, pursuant to the requirements of the Act, please be advised that: (1) the general authority for the collection of this information is 35 U.S.C. 2(b)(2); (2) furnishing of the information solicited is voluntary; and (3) the principal purpose for which the information is used by the U.S. Patent and Trademark Office is to process and/or examine your submission related to a patent application or patent. If you do not furnish the requested information, the U.S. Patent and Trademark Office may not be able to process and/or examine your submission, which may result in termination of proceedings or abandonment of the application or expiration of the patent.

The information provided by you in this form will be subject to the following routine uses:

1. The information on this form will be treated confidentially to the extent allowed under the Freedom of Information Act (5 U.S.C. 552) and the Privacy Act (5 U.S.C 552a). Records from this system of records may be disclosed to the Department of Justice to determine whether disclosure of these records is required by the Freedom of Information Act.
2. A record from this system of records may be disclosed, as a routine use, in the course of presenting evidence to a court, magistrate, or administrative tribunal, including disclosures to opposing counsel in the course of settlement negotiations.
3. A record in this system of records may be disclosed, as a routine use, to a Member of Congress submitting a request involving an individual, to whom the record pertains, when the individual has requested assistance from the Member with respect to the subject matter of the record.
4. A record in this system of records may be disclosed, as a routine use, to a contractor of the Agency having need for the information in order to perform a contract. Recipients of information shall be required to comply with the requirements of the Privacy Act of 1974, as amended, pursuant to 5 U.S.C. 552a(m).
5. A record related to an International Application filed under the Patent Cooperation Treaty in this system of records may be disclosed, as a routine use, to the International Bureau of the World Intellectual Property Organization, pursuant to the Patent Cooperation Treaty.
6. A record in this system of records may be disclosed, as a routine use, to another federal agency for purposes of National Security review (35 U.S.C. 181) and for review pursuant to the Atomic Energy Act (42 U.S.C. 218(c)).
7. A record from this system of records may be disclosed, as a routine use, to the Administrator, General Services, or his/her designee, during an inspection of records conducted by GSA as part of that agency's responsibility to recommend improvements in records management practices and programs, under authority of 44 U.S.C. 2904 and 2906. Such disclosure shall be made in accordance with the GSA regulations governing inspection of records for this purpose, and any other relevant (*i.e.*, GSA or Commerce) directive. Such disclosure shall not be used to make determinations about individuals.
8. A record from this system of records may be disclosed, as a routine use, to the public after either publication of the application pursuant to 35 U.S.C. 122(b) or issuance of a patent pursuant to 35 U.S.C. 151. Further, a record may be disclosed, subject to the limitations of 37 CFR 1.14, as a routine use, to the public if the record was filed in an application which became abandoned or in which the proceedings were terminated and which application is referenced by either a published application, an application open to public inspection or an issued patent.
9. A record from this system of records may be disclosed, as a routine use, to a Federal, State, or local law enforcement agency, if the USPTO becomes aware of a violation or potential violation of law or regulation.

PTO/AIA/02 (07-13)
Approved for use through 11/30/2020. OMB 0651-0032
U.S. Patent and Trademark Office; U.S. DEPARTMENT OF COMMERCE
Under the Paperwork Reduction Act of 1995, no persons are required to respond to a collection of information unless it displays a valid OMB control number.

SUBSTITUTE STATEMENT IN LIEU OF AN OATH OR DECLARATION FOR UTILITY OR DESIGN PATENT APPLICATION (35 U.S.C. 115(d) AND 37 CFR 1.64)

Title of Invention: MULTIPLE LINKED APPLIANCE WITH AUXILIARY OUTLET

This statement is directed to:

☐ The attached application,

OR

☒ United States application or PCT international application number 16/671,383 filed on NOVEMBER 1, 2019.

LEGAL NAME of inventor to whom this substitute statement applies:

(*E.g.*, Given Name (first and middle (if any)) and Family Name or Surname)

DENNIS O'BRIEN

Residence (except for a deceased or legally incapacitated inventor):

City	State	Country
GUELPH	ON	CANADA

Mailing Address (except for a deceased or legally incapacitated inventor):

5070 WHITELAW ROAD

City	State	Zip	Country
GUELPH	ON	N1H 6Z9	CANADA

I believe the above-named inventor or joint inventor to be the original inventor or an original joint inventor of a claimed invention in the application.

The above-identified application was made or authorized to be made by me.

I hereby acknowledge that any willful false statement made in this statement is punishable under 18 U.S.C. 1001 by fine or imprisonment of not more than five (5) years, or both.

Relationship to the inventor to whom this substitute statement applies:

- ☐ Legal Representative (for deceased or legally incapacitated inventor only),
- ☐ Assignee,
- ☒ Person to whom the inventor is under an obligation to assign,
- ☐ Person who otherwise shows a sufficient proprietary interest in the matter (petition under 37 CFR 1.46 is required), or
- ☐ Joint Inventor.

This collection of information is required by 35 U.S.C. 115 and 37 CFR 1.63. The information is required to obtain or retain a benefit by the public which is to file (and by the USPTO to process) an application. Confidentiality is governed by 35 U.S.C. 122 and 37 CFR 1.11 and 1.14. This collection is estimated to take 1 minute to complete, including gathering, preparing, and submitting the completed application form to the USPTO. Time will vary depending upon the individual case. Any comments on the amount of time you require to complete this form and/or suggestions for reducing this burden, should be sent to the Chief Information Officer, U.S. Patent and Trademark Office, U.S. Department of Commerce, P.O. Box 1450, Alexandria, VA 22313-1450. DO NOT SEND FEES OR COMPLETED FORMS TO THIS ADDRESS. **SEND TO: Commissioner for Patents, P.O. Box 1450, Alexandria, VA 22313-1450.**

If you need assistance in completing the form, call 1-800-PTO-9199 and select option 2.

Under the Paperwork Reduction Act of 1995, no persons are required to respond to a collection of information unless it displays a valid OMB control number.

SUBSTITUTE STATEMENT

Circumstances permitting execution of this substitute statement:

- [ ] Inventor is deceased,
- [ ] Inventor is under legal incapacity,
- [ ] Inventor cannot be found or reached after diligent effort, or
- [x] Inventor has refused to execute the oath or declaration under 37 CFR 1.63.

If there are joint inventors, please check the appropriate box below:

- [x] An application data sheet under 37 CFR 1.76 (PTO/AIA/14 or equivalent) naming the entire inventive entity has been or is currently submitted.

OR

- [ ] An application data sheet under 37 CFR 1.76 (PTO/AIA/14 or equivalent) has not been submitted. Thus, a Substitute Statement Supplemental Sheet (PTO/AIA/11 or equivalent) naming the entire inventive entity and providing inventor information is attached. See 37 CFR 1.64(b).

WARNING:

Petitioner/applicant is cautioned to avoid submitting personal information in documents filed in a patent application that may contribute to identity theft. Personal information such as social security numbers, bank account numbers, or credit card numbers (other than a check or credit card authorization form PTO-2038 submitted for payment purposes) is never required by the USPTO to support a petition or an application. If this type of personal information is included in documents submitted to the USPTO, petitioners/applicants should consider redacting such personal information from the documents before submitting them to the USPTO. Petitioner/applicant is advised that the record of a patent application is available to the public after publication of the application (unless a non-publication request in compliance with 37 CFR 1.213(a) is made in the application) or issuance of a patent. Furthermore, the record from an abandoned application may also be available to the public if the application is referenced in a published application or an issued patent (see 37 CFR 1.14). Checks and credit card authorization forms PTO-2038 submitted for payment purposes are not retained in the application file and therefore are not publicly available.

PERSON EXECUTING THIS SUBSTITUTE STATEMENT:

Name: Ralph E. Jocke | Date (Optional):

Signature:

APPLICANT NAME AND TITLE OF PERSON EXECUTING THIS SUBSTITUTE STATEMENT:

If the applicant is a juristic entity, list the applicant name and the title of the signer:

Applicant Name: INITIRION CORPORATION

Title of Person Executing This Substitute Statement: ATTORNEY

The signer, whose title is supplied above, is authorized to act on behalf of the applicant.

Residence of the signer (unless provided in an application data sheet, PTO/AIA/14 or equivalent):

City MEDINA | State OH | Country US

Mailing Address of the signer (unless provided in an application data sheet, PTO/AIA/14 or equivalent)

231 SOUTH BROADWAY

City MEDINA | State OH | Zip 44256 | Country US

Note: Use an additional PTO/AIA/02 form for each inventor who is deceased, legally incapacitated, cannot be found or reached after diligent effort, or has refused to execute the oath or declaration under 37 CFR 1.63.

Privacy Act Statement

The **Privacy Act of 1974 (P.L. 93-579)** requires that you be given certain information in connection with your submission of the attached form related to a patent application or patent. Accordingly, pursuant to the requirements of the Act, please be advised that: (1) the general authority for the collection of this information is 35 U.S.C. 2(b)(2); (2) furnishing of the information solicited is voluntary; and (3) the principal purpose for which the information is used by the U.S. Patent and Trademark Office is to process and/or examine your submission related to a patent application or patent. If you do not furnish the requested information, the U.S. Patent and Trademark Office may not be able to process and/or examine your submission, which may result in termination of proceedings or abandonment of the application or expiration of the patent.

The information provided by you in this form will be subject to the following routine uses:

1. The information on this form will be treated confidentially to the extent allowed under the Freedom of Information Act (5 U.S.C. 552) and the Privacy Act (5 U.S.C 552a). Records from this system of records may be disclosed to the Department of Justice to determine whether disclosure of these records is required by the Freedom of Information Act.
2. A record from this system of records may be disclosed, as a routine use, in the course of presenting evidence to a court, magistrate, or administrative tribunal, including disclosures to opposing counsel in the course of settlement negotiations.
3. A record in this system of records may be disclosed, as a routine use, to a Member of Congress submitting a request involving an individual, to whom the record pertains, when the individual has requested assistance from the Member with respect to the subject matter of the record.
4. A record in this system of records may be disclosed, as a routine use, to a contractor of the Agency having need for the information in order to perform a contract. Recipients of information shall be required to comply with the requirements of the Privacy Act of 1974, as amended, pursuant to 5 U.S.C. 552a(m).
5. A record related to an International Application filed under the Patent Cooperation Treaty in this system of records may be disclosed, as a routine use, to the International Bureau of the World Intellectual Property Organization, pursuant to the Patent Cooperation Treaty.
6. A record in this system of records may be disclosed, as a routine use, to another federal agency for purposes of National Security review (35 U.S.C. 181) and for review pursuant to the Atomic Energy Act (42 U.S.C. 218(c)).
7. A record from this system of records may be disclosed, as a routine use, to the Administrator, General Services, or his/her designee, during an inspection of records conducted by GSA as part of that agency's responsibility to recommend improvements in records management practices and programs, under authority of 44 U.S.C. 2904 and 2906. Such disclosure shall be made in accordance with the GSA regulations governing inspection of records for this purpose, and any other relevant (*i.e.*, GSA or Commerce) directive. Such disclosure shall not be used to make determinations about individuals.
8. A record from this system of records may be disclosed, as a routine use, to the public after either publication of the application pursuant to 35 U.S.C. 122(b) or issuance of a patent pursuant to 35 U.S.C. 151. Further, a record may be disclosed, subject to the limitations of 37 CFR 1.14, as a routine use, to the public if the record was filed in an application which became abandoned or in which the proceedings were terminated and which application is referenced by either a published application, an application open to public inspection or an issued patent.
9. A record from this system of records may be disclosed, as a routine use, to a Federal, State, or local law enforcement agency, if the USPTO becomes aware of a violation or potential violation of law or regulation.

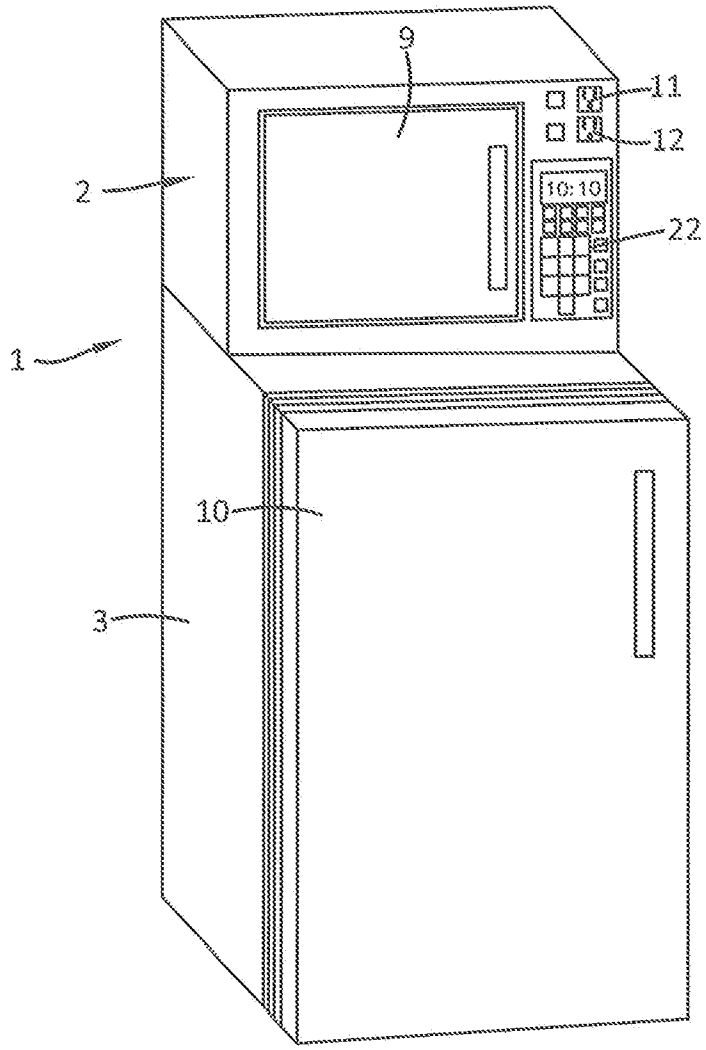

FIGURE 1

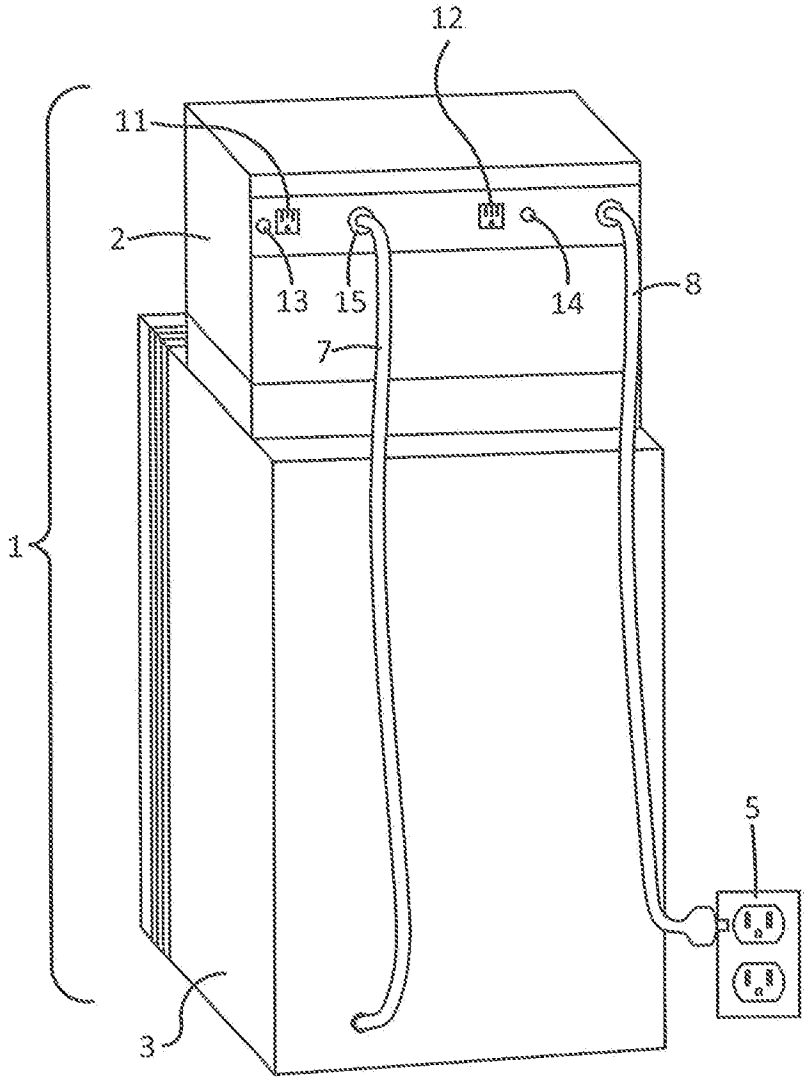

FIGURE 2

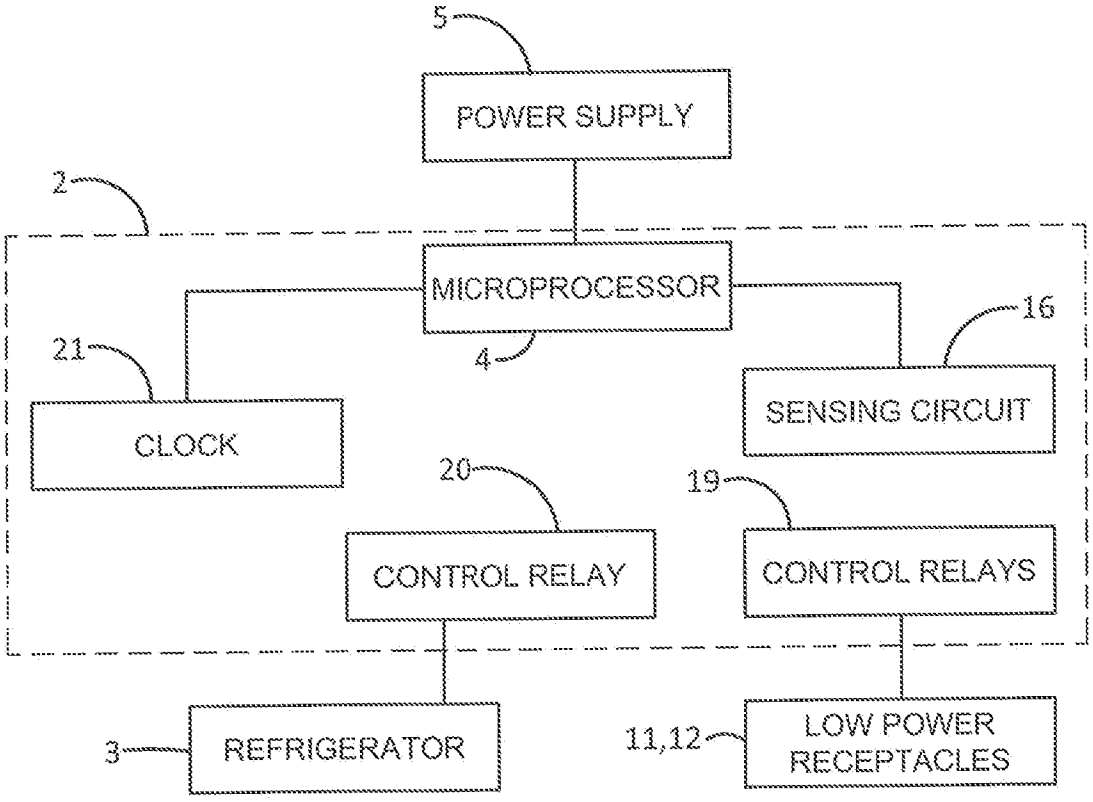
5
POWER SUPPLY
2
MICROPROCESSOR
4
16
21
SENSING CIRCUIT
CLOCK
20
19
CONTROL RELAY
CONTROL RELAYS
3
REFRIGERATOR
11,12
LOW POWER
RECEPTACLES

FIGURE 3

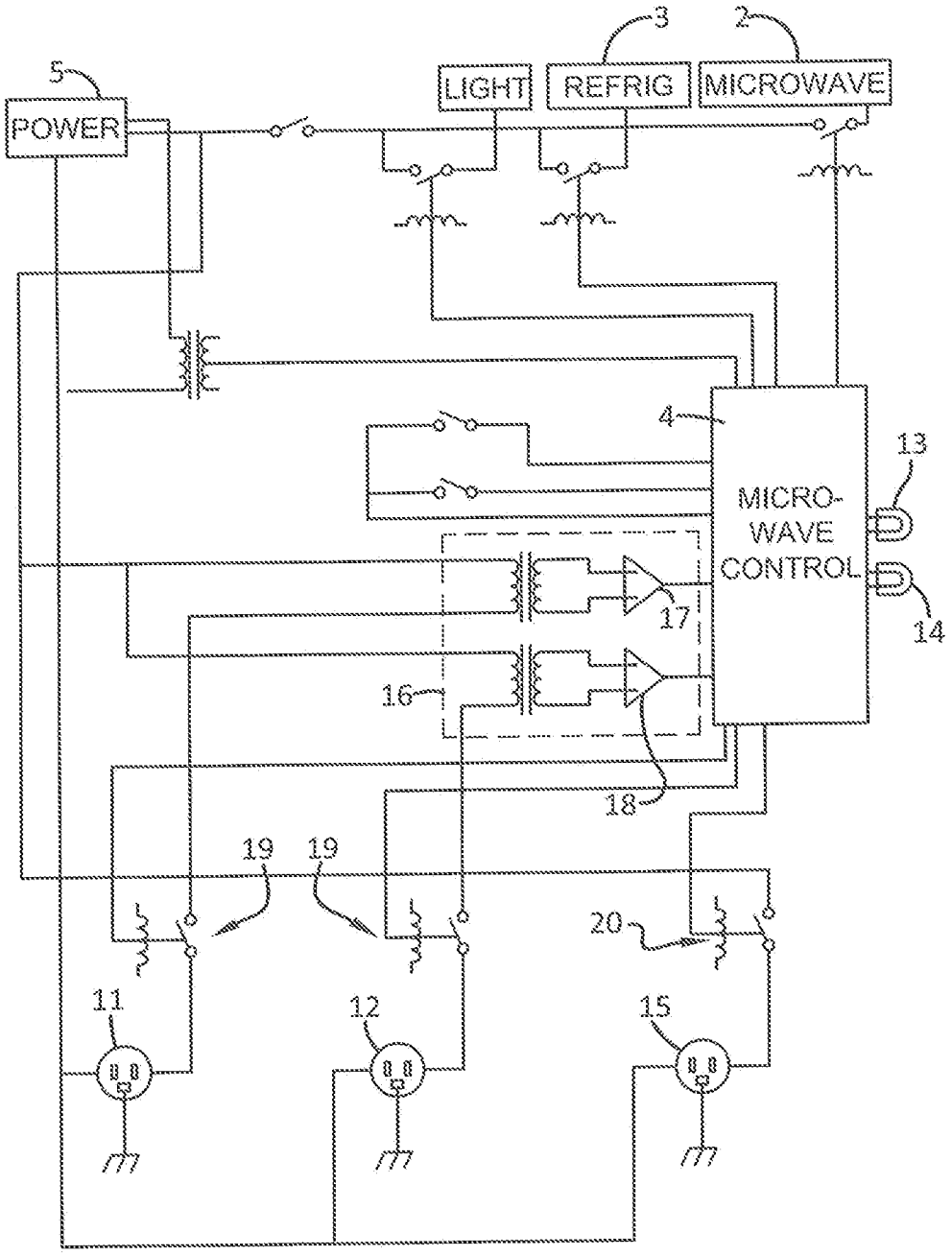
3
2
5
LIGHT
REFRIG
MICROWAVE
POWER
4
13
MICRO-
WAVE
CONTROL
17
14
16
18
19
19
20
11
12
15

FIGURE 4

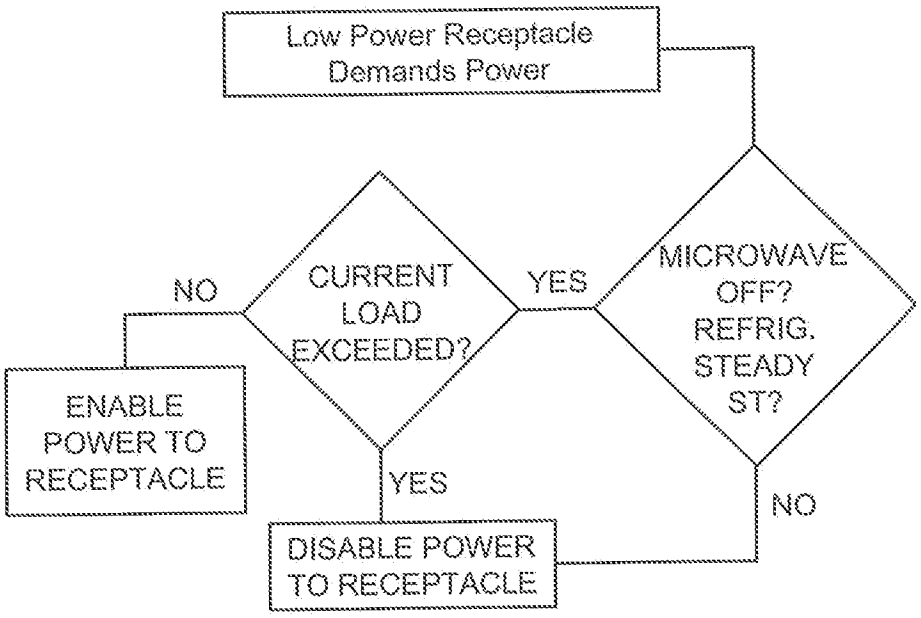

FIGURE 5

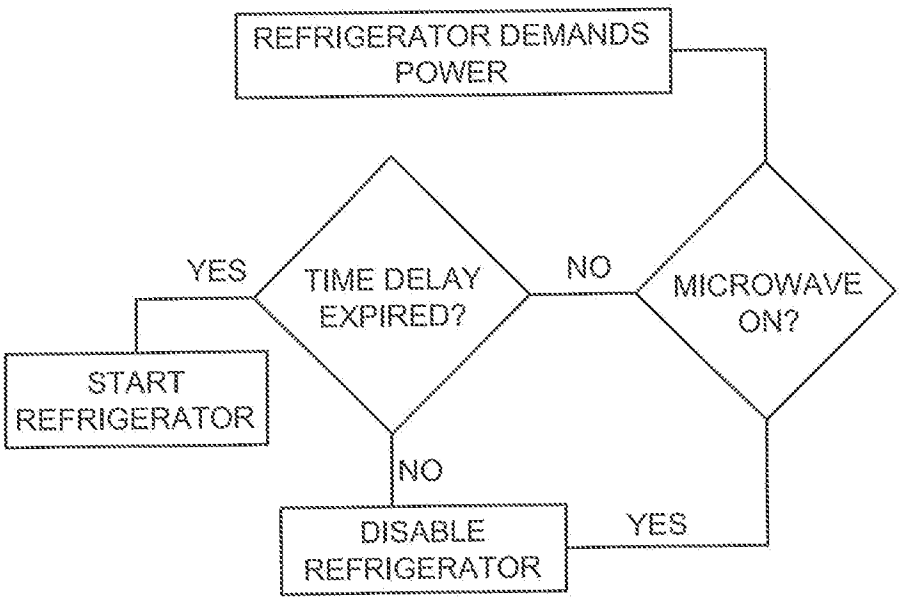

FIGURE 6

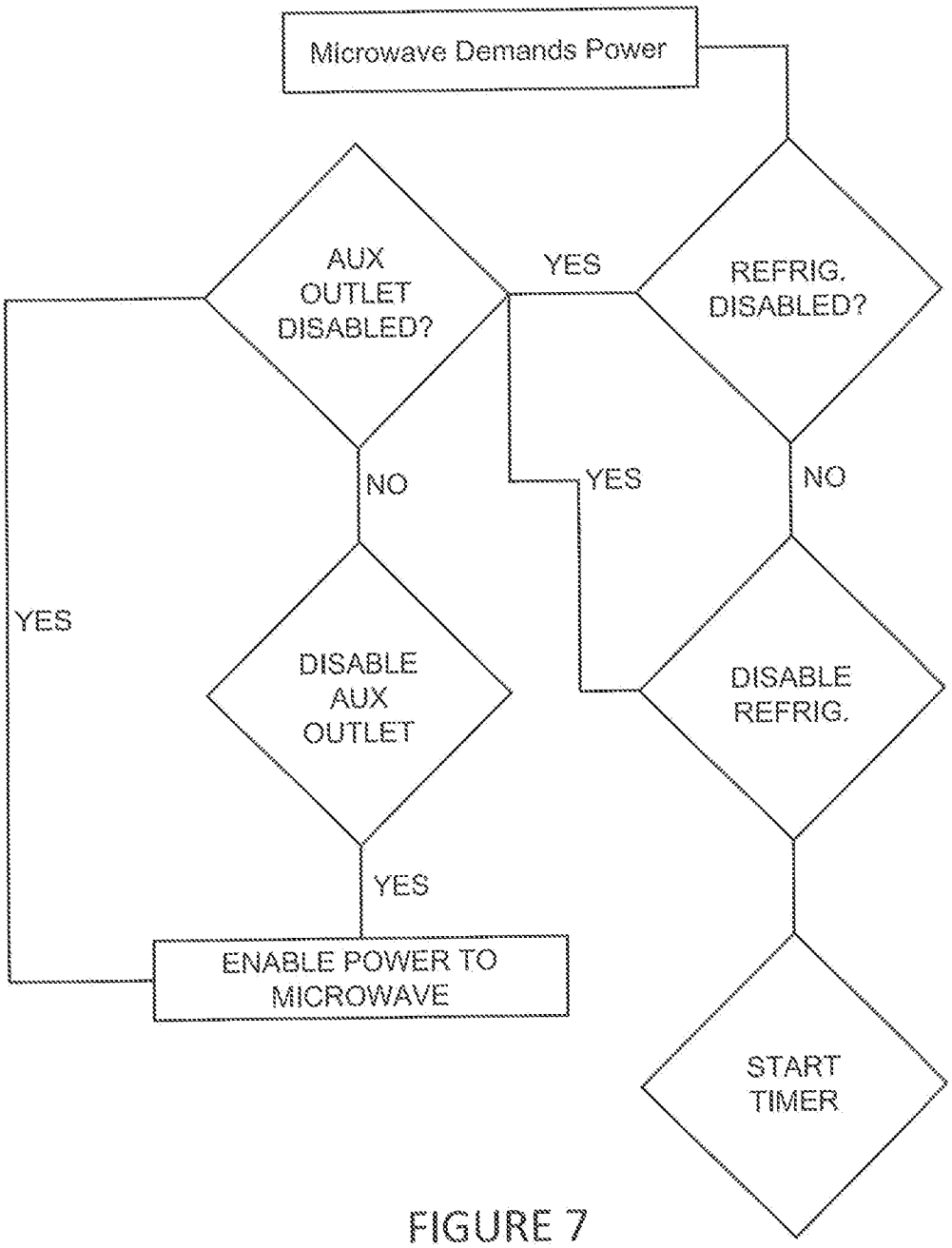
Microwave Demands Power
AUX OUTLET DISABLED?
YES
REFRIG. DISABLED?
NO
YES
NO
YES
DISABLE AUX OUTLET
DISABLE REFRIG.
YES
ENABLE POWER TO MICROWAVE
START TIMER

FIGURE 7

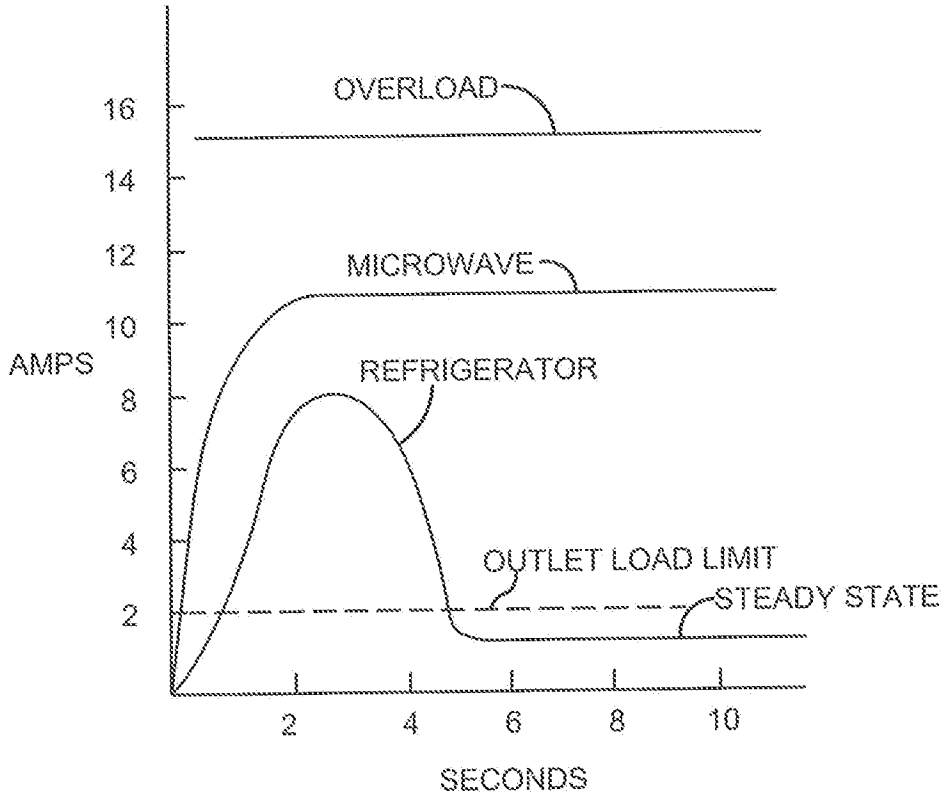
OVERLOAD
MICROWAVE
REFRIGERATOR
OUTLET LOAD LIMIT
STEADY STATE
AMPS
16
14
12
10
8
6
4
2
2
4
6
8
10
SECONDS

FIGURE 8

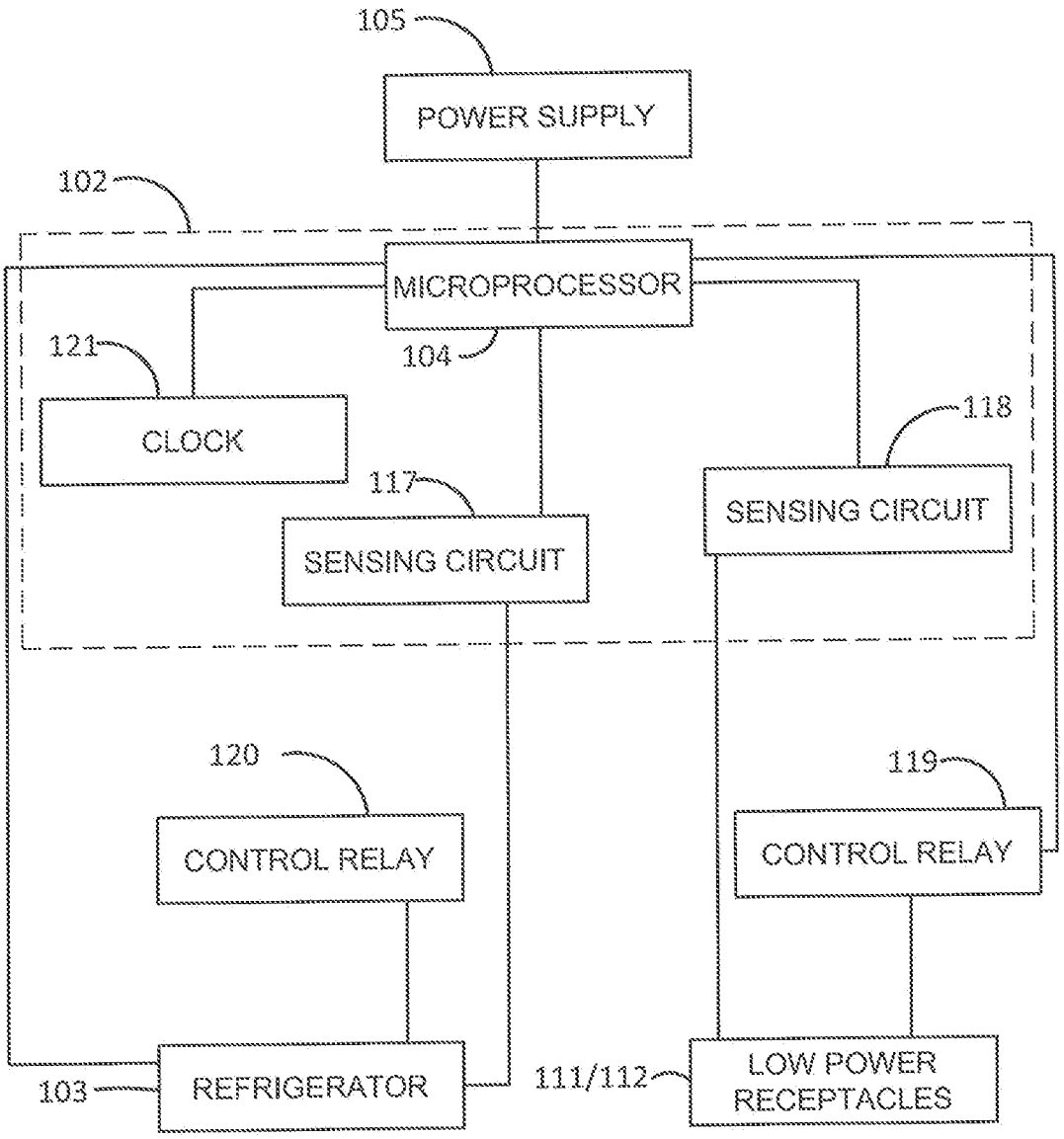
105
POWER SUPPLY
102
MICROPROCESSOR
104
121
CLOCK
117
SENSING CIRCUIT
118
SENSING CIRCUIT
120
CONTROL RELAY
119
CONTROL RELAY
103
REFRIGERATOR
111/112
LOW POWER RECEPTACLES

FIGURE 9

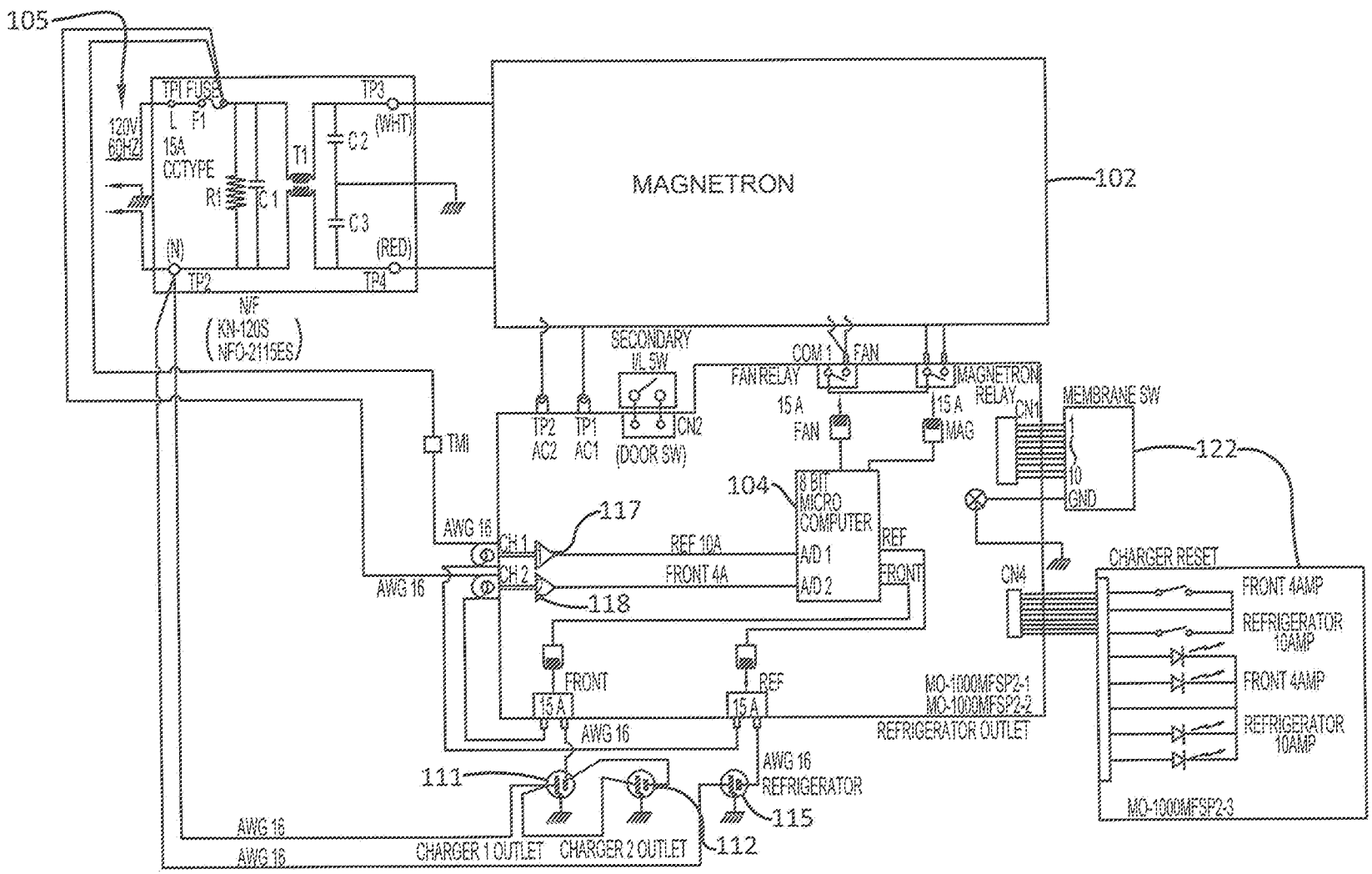
105
120V 60HZ
TP1 FUSE
L F1
15A CC TYPE
R1
C1
T1
C2
C3
TP3 (WHT)
(RED) TP4
(N) TP2
N/F (KN-120S NFO-2115ES)
MAGNETRON
102
SECONDARY H.L SW
TP2 AC2
TP1 AC1
CN2 (DOOR SW)
TM1
FAN RELAY
COM 1
FAN
15 A
FAN
MAGNETRON RELAY
15 A
MAG
CN1
MEMBRANE SW
10
GND
122
104
8 BIT MICRO COMPUTER
A/D 1
A/D 2
REF
FRONT
117
118
AWG 16
CH 1
CH 2
REF 10A
FRONT 4A
CN4
CHARGER RESET
FRONT 4AMP
REFRIGERATOR 10AMP
FRONT 4AMP
REFRIGERATOR 10AMP
MO-1000MFSP2-3
FRONT
REF
15 A
15 A
AWG 16
MO-1000MFSP2-1
MO-1000MFSP2-2
REFRIGERATOR OUTLET
AWG 16
REFRIGERATOR
111
115
112
AWG 16
AWG 16
CHARGER 1 OUTLET
CHARGER 2 OUTLET

FIGURE 10

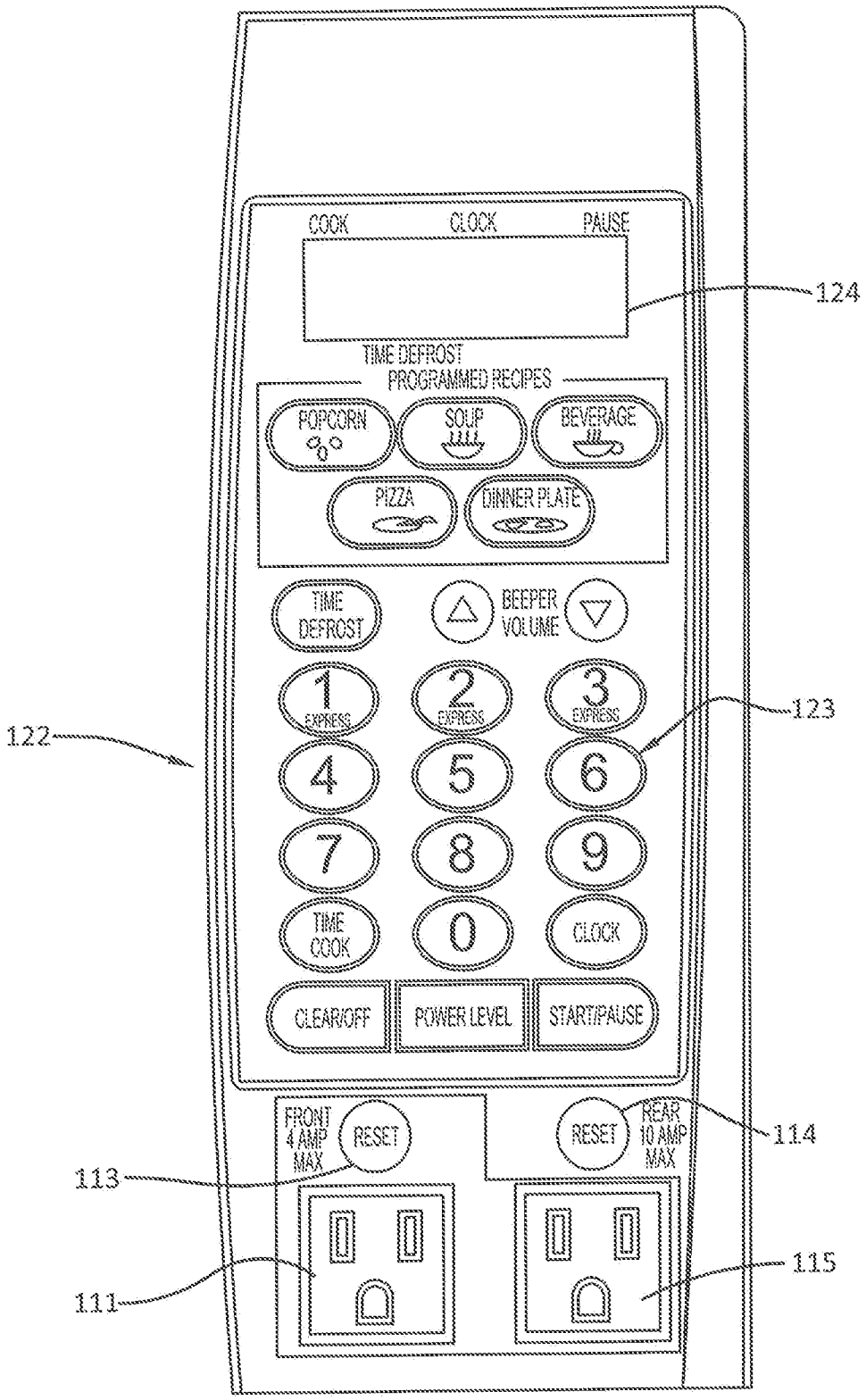
COOK
CLOCK
PAUSE
124
TIME DEFROST
PROGRAMMED RECIPES
POPCORN
SOUP
BEVERAGE
PIZZA
DINNER PLATE
TIME DEFROST
BEEPER VOLUME
1 EXPRESS
2 EXPRESS
3 EXPRESS
123
122
4
5
6
7
8
9
TIME COOK
0
CLOCK
CLEAR/OFF
POWER LEVEL
START/PAUSE
FRONT 4 AMP MAX
RESET
RESET
REAR 10 AMP MAX
114
113
111
115

FIGURE 11

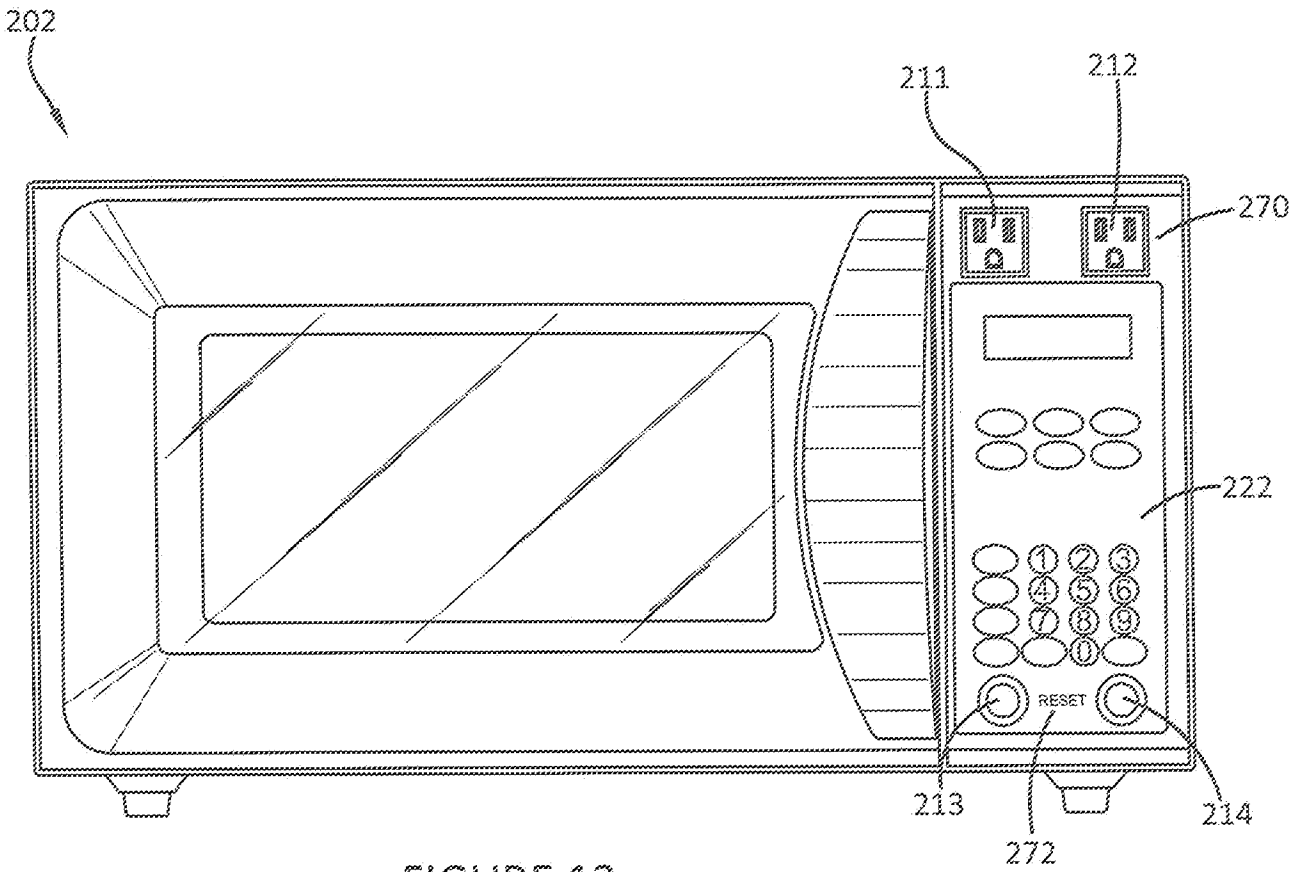

FIGURE 12

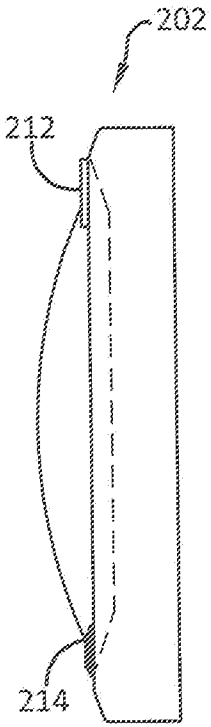

FIGURE 13

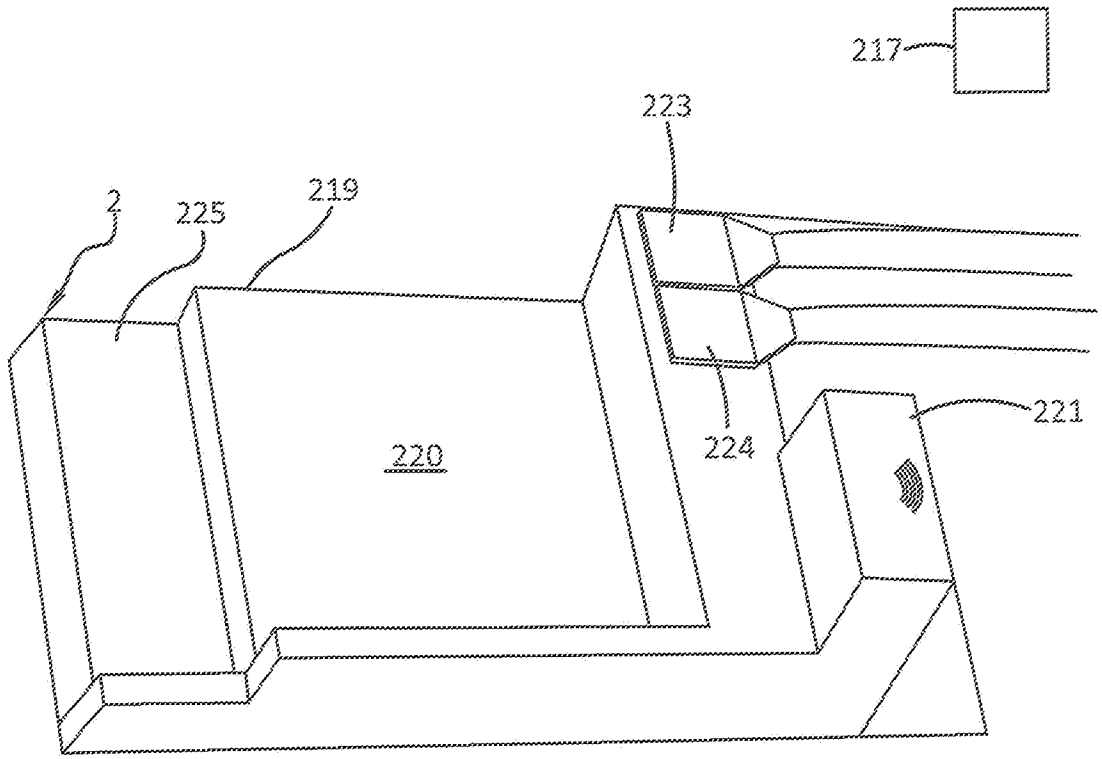

FIGURE 14

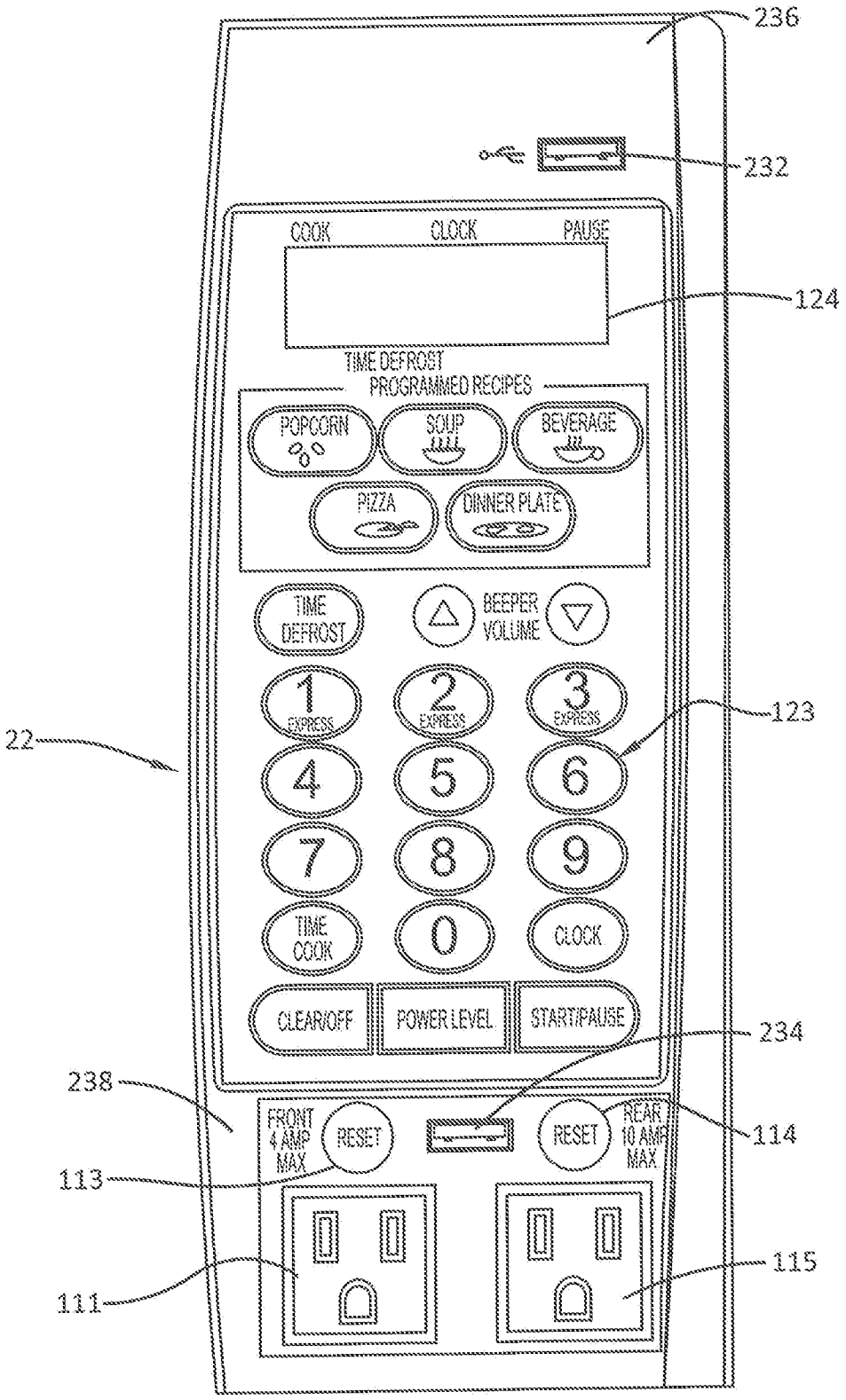
236
232
COOK
CLOCK
PAUSE
124
TIME DEFROST
PROGRAMMED RECIPES
POPCORN
SOUP
BEVERAGE
PIZZA
DINNER PLATE
TIME DEFROST
BEEPER VOLUME
1 EXPRESS
2 EXPRESS
3 EXPRESS
123
22
4
5
6
7
8
9
TIME COOK
0
CLOCK
CLEAR/OFF
POWER LEVEL
START/PAUSE
234
238
FRONT 4 AMP MAX
RESET
RESET
REAR 10 AMP MAX
114
113
115
111

FIGURE 15

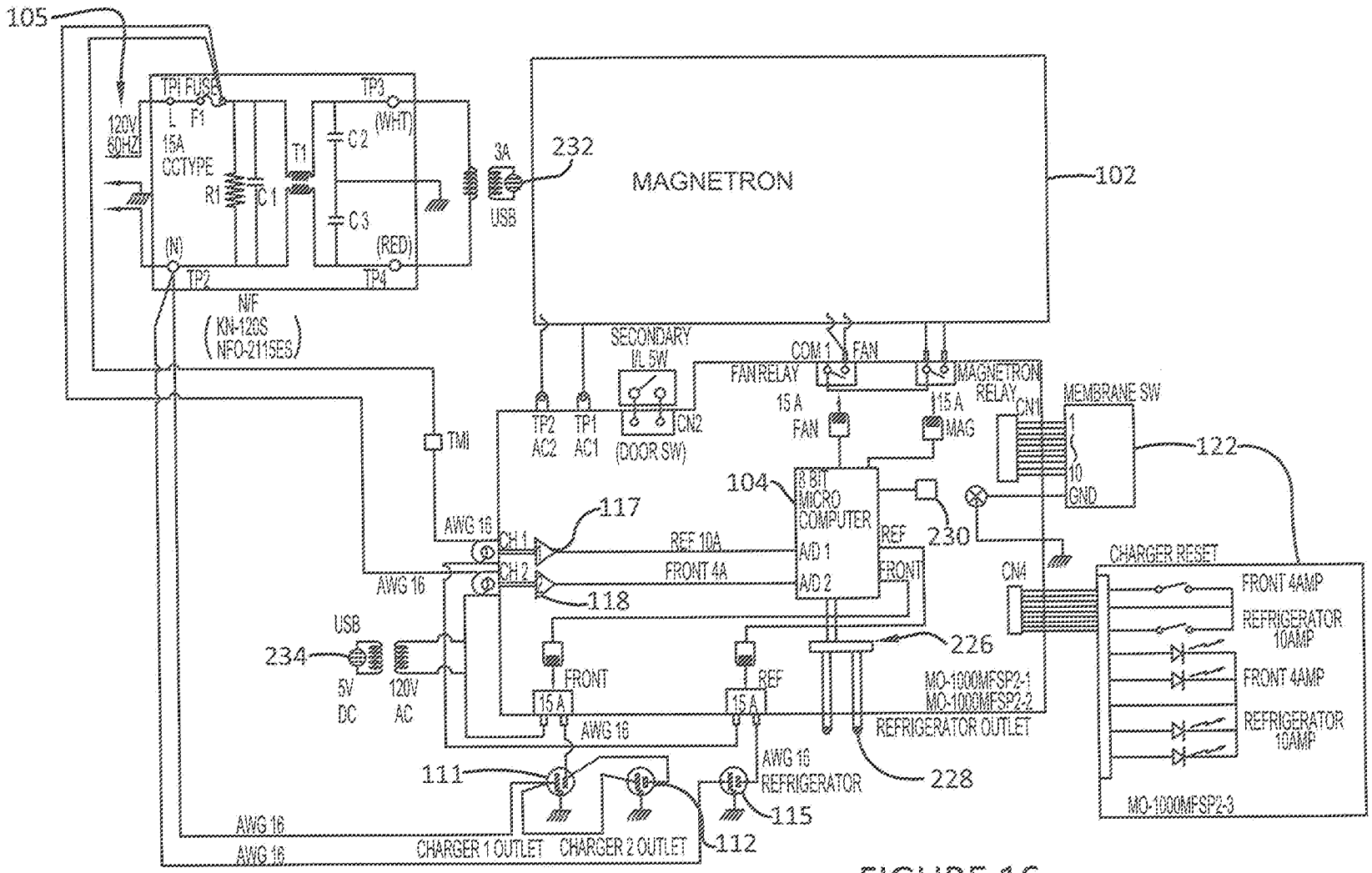
105
120V 60HZ
TP1 FUSE
F1
L
15A
CCTYPE
R1
C1
T1
C2
C3
TP3
(WHT)
(RED)
TP4
(N)
TP2
N/F
(KN-120S
NFO-211SES)
3A
USB
232
MAGNETRON
102
SECONDARY
IL SW
TP2
AC2
TP1
AC1
CN2
(DOOR SW)
TM1
COM 1
FAN
FAN RELAY
15 A
FAN
MAGNETRON
RELAY
15 A
MAG
CN1
MEMBRANE SW
1
10
GND
122
104
8 BIT
MICRO
COMPUTER
A/D 1
A/D 2
REF
FRONT
230
AWG 16
CH 1
CH 2
117
118
REF 10A
FRONT 4A
AWG 16
USB
234
5V
DC
120V
AC
FRONT
REF
15 A
15 A
AWG 16
226
MO-1000MFSP2-1
MO-1000MFSP2-2
REFRIGERATOR OUTLET
228
AWG 16
REFRIGERATOR
111
115
112
AWG 16
AWG 16
CHARGER 1 OUTLET
CHARGER 2 OUTLET
CN4
CHARGER RESET
FRONT 4AMP
REFRIGERATOR
10AMP
FRONT 4AMP
REFRIGERATOR
10AMP
MO-1000MFSP2-3

FIGURE 16

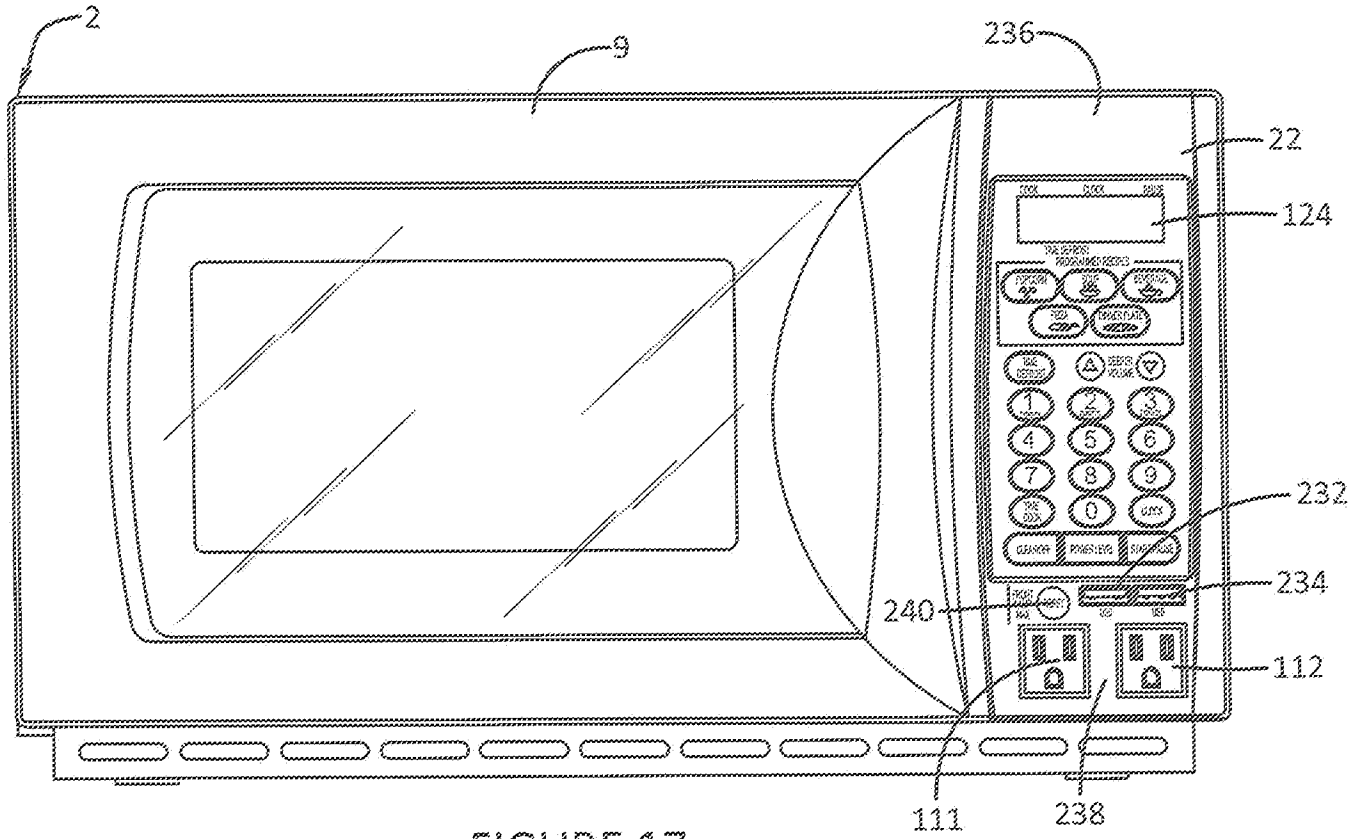

FIGURE 17

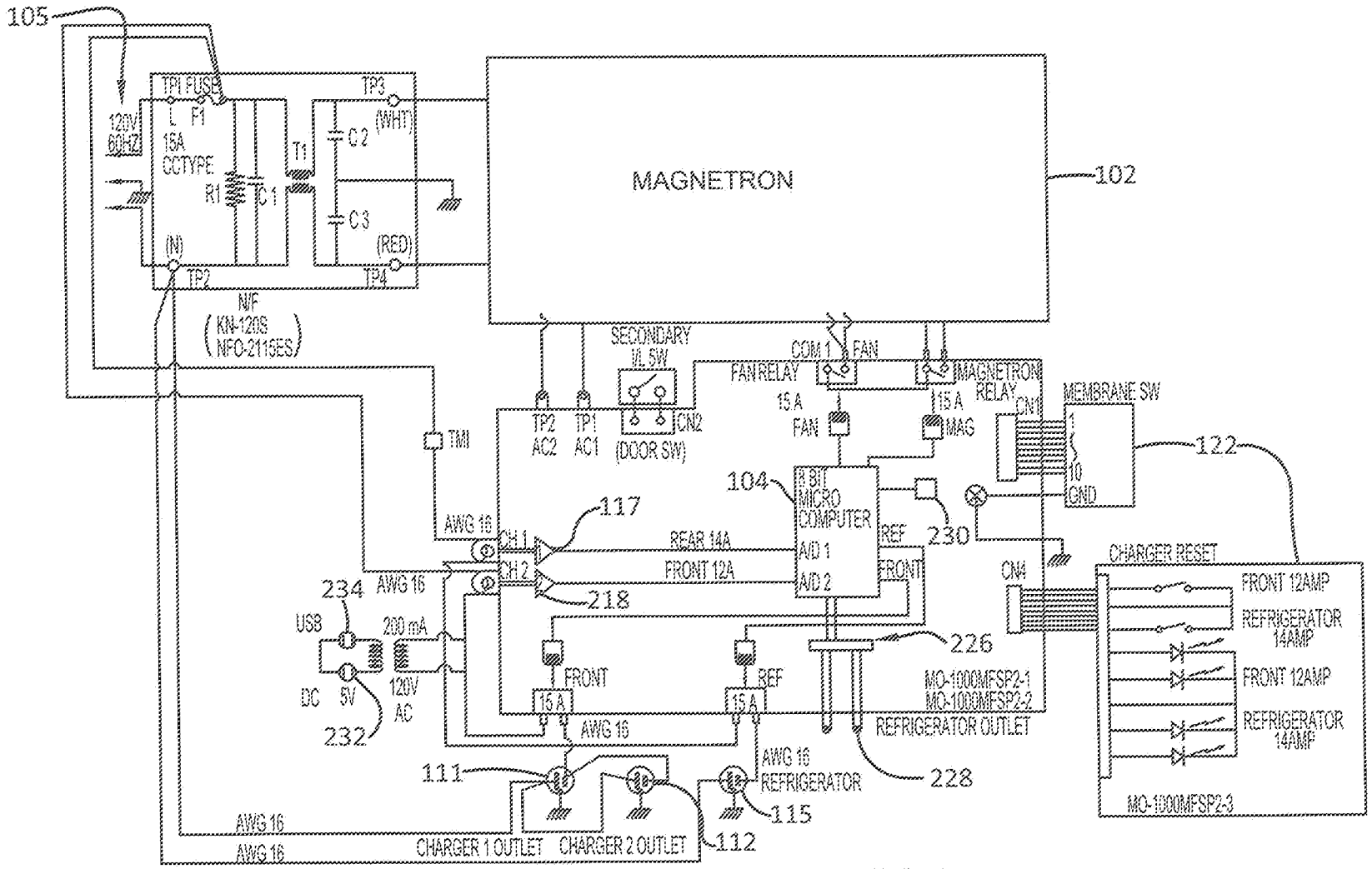
105
120V 60HZ
TP1 FUSE
L F1
15A CCTYPE
R1
C1
T1
C2
C3
TP3
(WHT)
(RED)
TP4
(N)
TP2
N/F
(KN-120S NFO-2115ES)
MAGNETRON
102
SECONDARY H.L SW
TP2 AC2
TP1 AC1
CN2
(DOOR SW)
TM1
FAN RELAY
COM 1
FAN
MAGNETRON RELAY
15 A
FAN
15 A
MAG
CN1
MEMBRANE SW
1
10
GND
122
104
8 BIT MICRO COMPUTER
A/D 1
A/D 2
REF
FRONT
230
117
AWG 16
CH 1
CH 2
REAR 14A
FRONT 12A
218
234
USB
DC 5V
200 mA
120V AC
232
FRONT
15 A
REF
15 A
AWG 16
226
MO-1000MFSP2-1
MO-1000MFSP2-2
REFRIGERATOR OUTLET
228
AWG 16
REFRIGERATOR
111
115
112
CHARGER 1 OUTLET
CHARGER 2 OUTLET
CN4
CHARGER RESET
FRONT 12AMP
REFRIGERATOR 14AMP
FRONT 12AMP
REFRIGERATOR 14AMP
MO-1000MFSP2-3

FIGURE 18

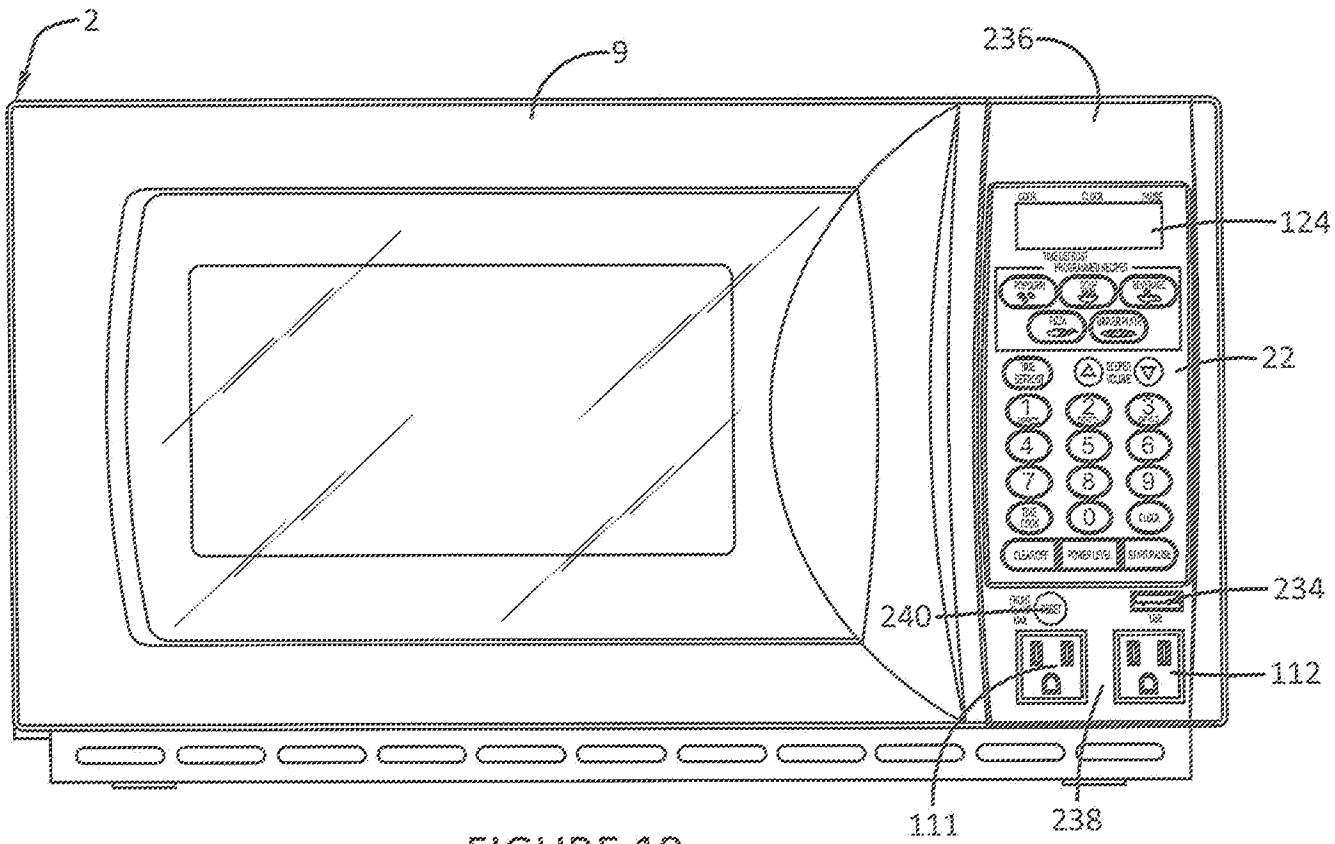

FIGURE 19

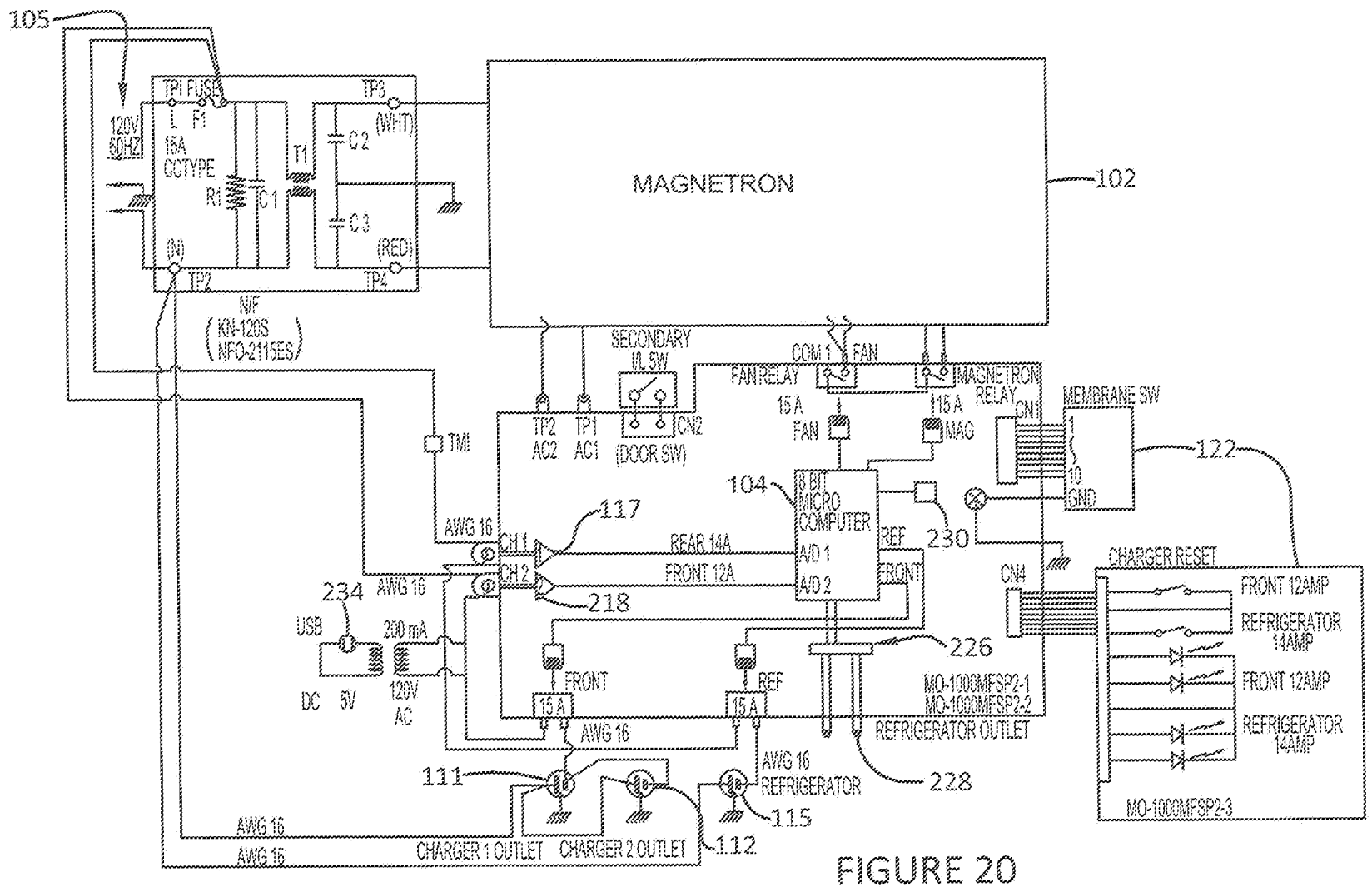
105
120V 60HZ
TP1 FUSE
L F1
15A CCTYPE
R1
C1
T1
C2
C3
TP3 (WHIT)
(RED) TP4
(N) TP2
N/F (KN-120S NFO-2115ES)
MAGNETRON
102
SECONDARY IL SW
TP2 AC2
TP1 AC1
CN2 (DOOR SW)
COM 1
FAN
FAN RELAY
15 A
FAN
MAGNETRON RELAY
15 A
MAG
CN1
MEMBRANE SW
1
10
GND
122
TMI
104
8 BIT MICRO COMPUTER
A/D 1
A/D 2
REF
FRONT
230
117
AWG 16
CH 1
CH 2
REAR 14A
FRONT 12A
218
234
USB
200 mA
DC 5V
120V AC
FRONT
15 A
REF
15 A
AWG 16
226
MO-1000MFSP2-1
MO-1000MFSP2-2
REFRIGERATOR OUTLET
228
111
AWG 16 REFRIGERATOR
115
112
CHARGER 1 OUTLET
CHARGER 2 OUTLET
CN4
CHARGER RESET
FRONT 12AMP
REFRIGERATOR 14AMP
FRONT 12AMP
REFRIGERATOR 14AMP
MO-1000MFSP2-3

FIGURE 20

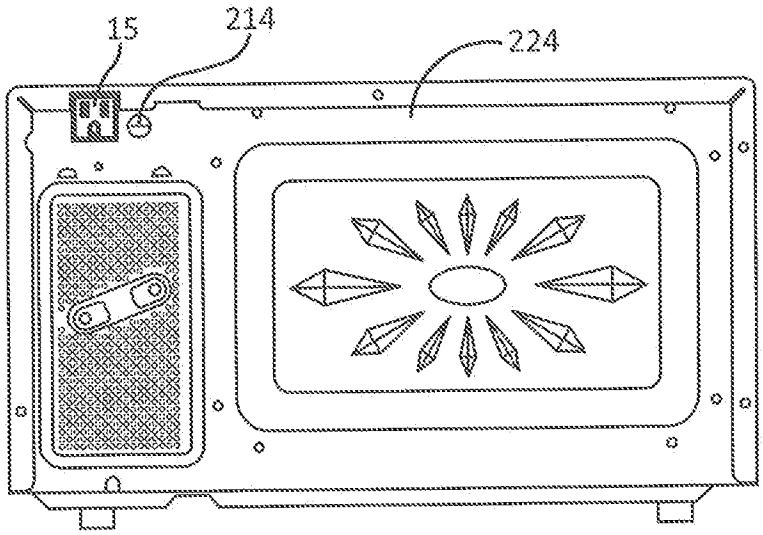

FIGURE 21

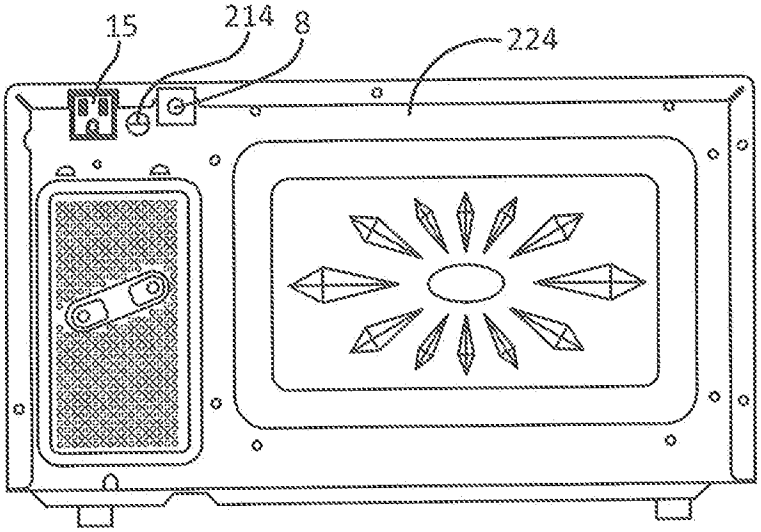

FIGURE 22

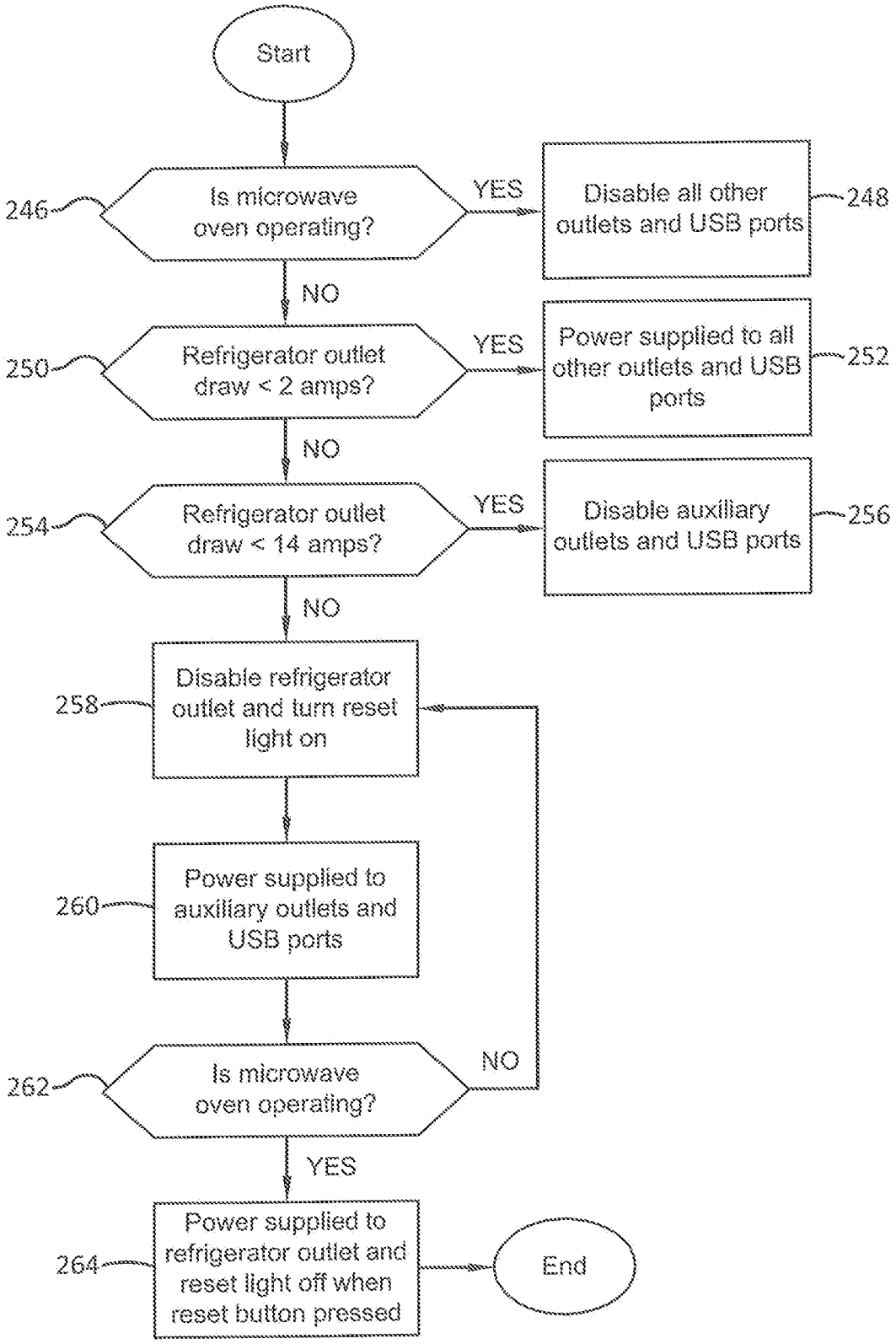
Start
246
Is microwave oven operating?
YES
Disable all other outlets and USB ports
248
NO
250
Refrigerator outlet draw < 2 amps?
YES
Power supplied to all other outlets and USB ports
252
NO
254
Refrigerator outlet draw < 14 amps?
YES
Disable auxiliary outlets and USB ports
256
NO
258
Disable refrigerator outlet and turn reset light on
260
Power supplied to auxiliary outlets and USB ports
262
Is microwave oven operating?
NO
YES
264
Power supplied to refrigerator outlet and reset light off when reset button pressed
End

FIGURE 23

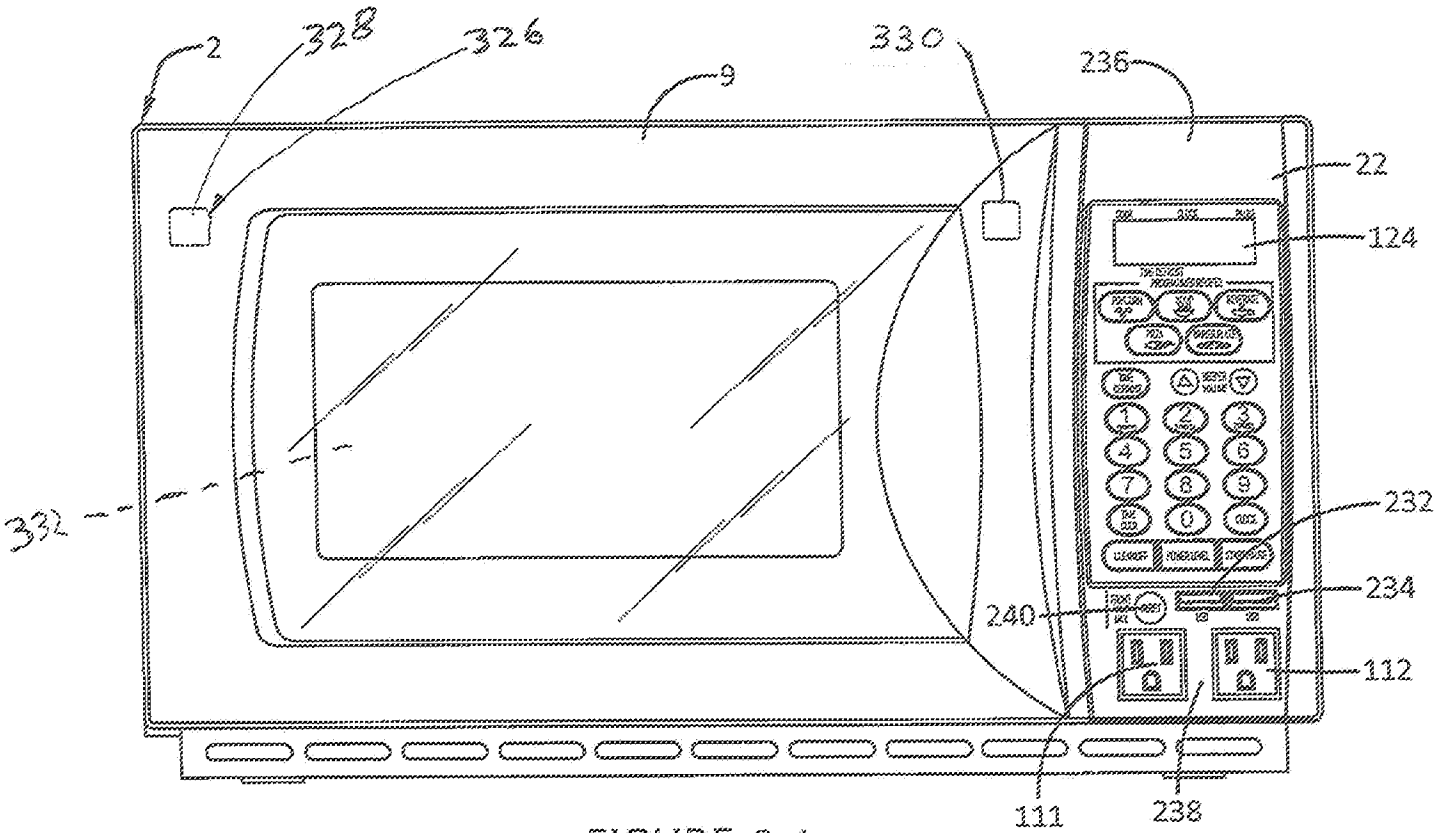

FIGURE 24

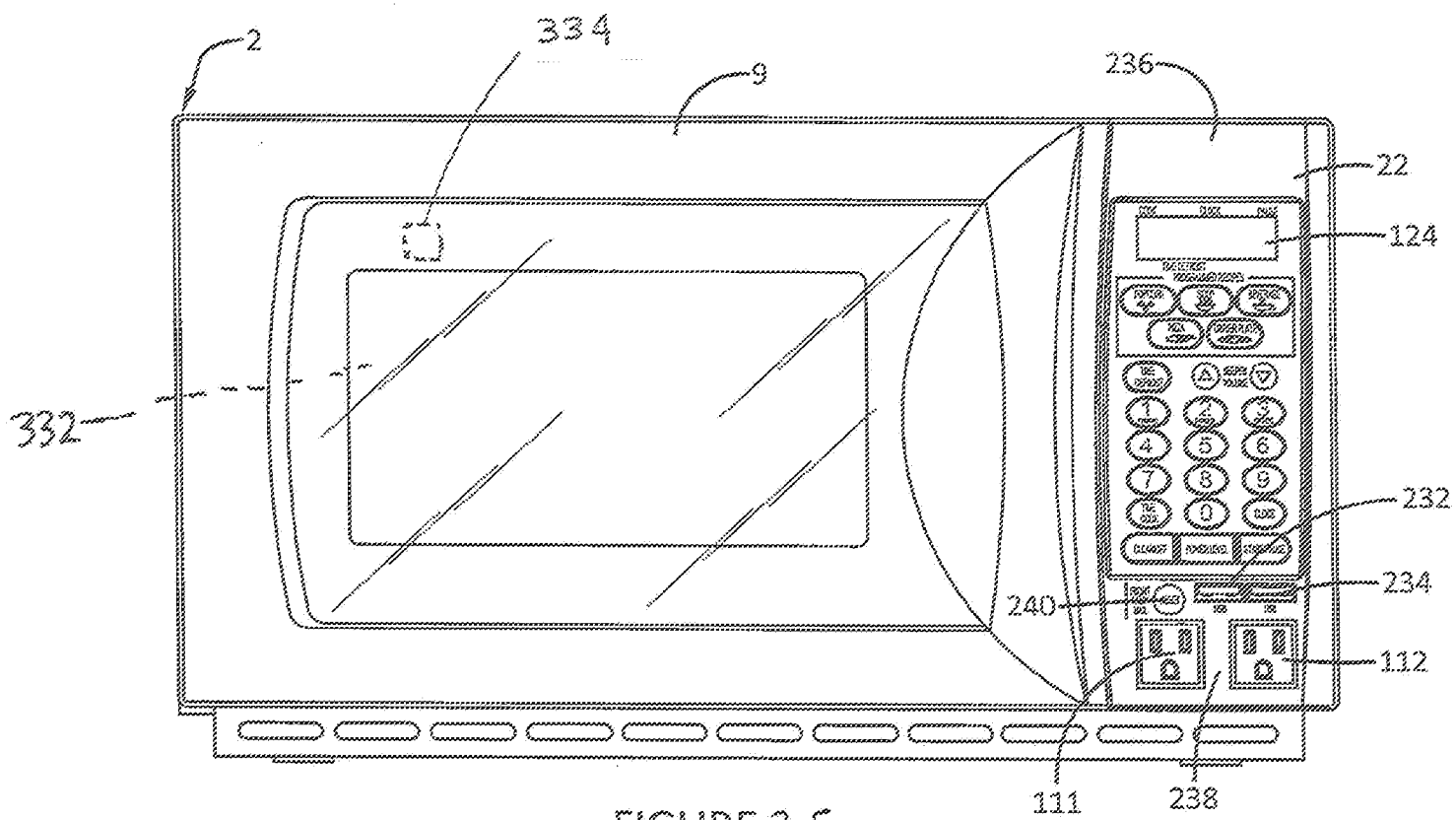

FIGURE 2.5

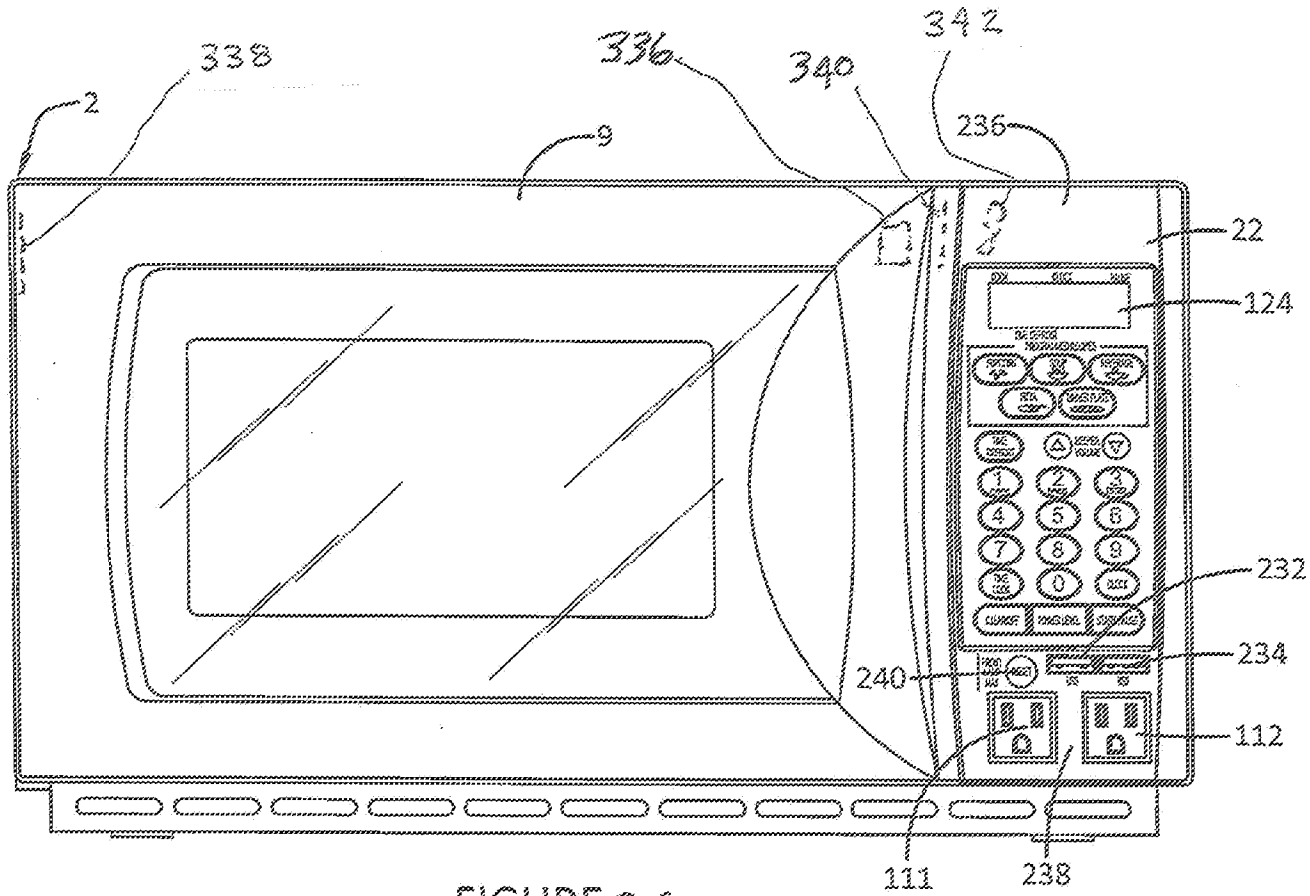

FIGURE 26

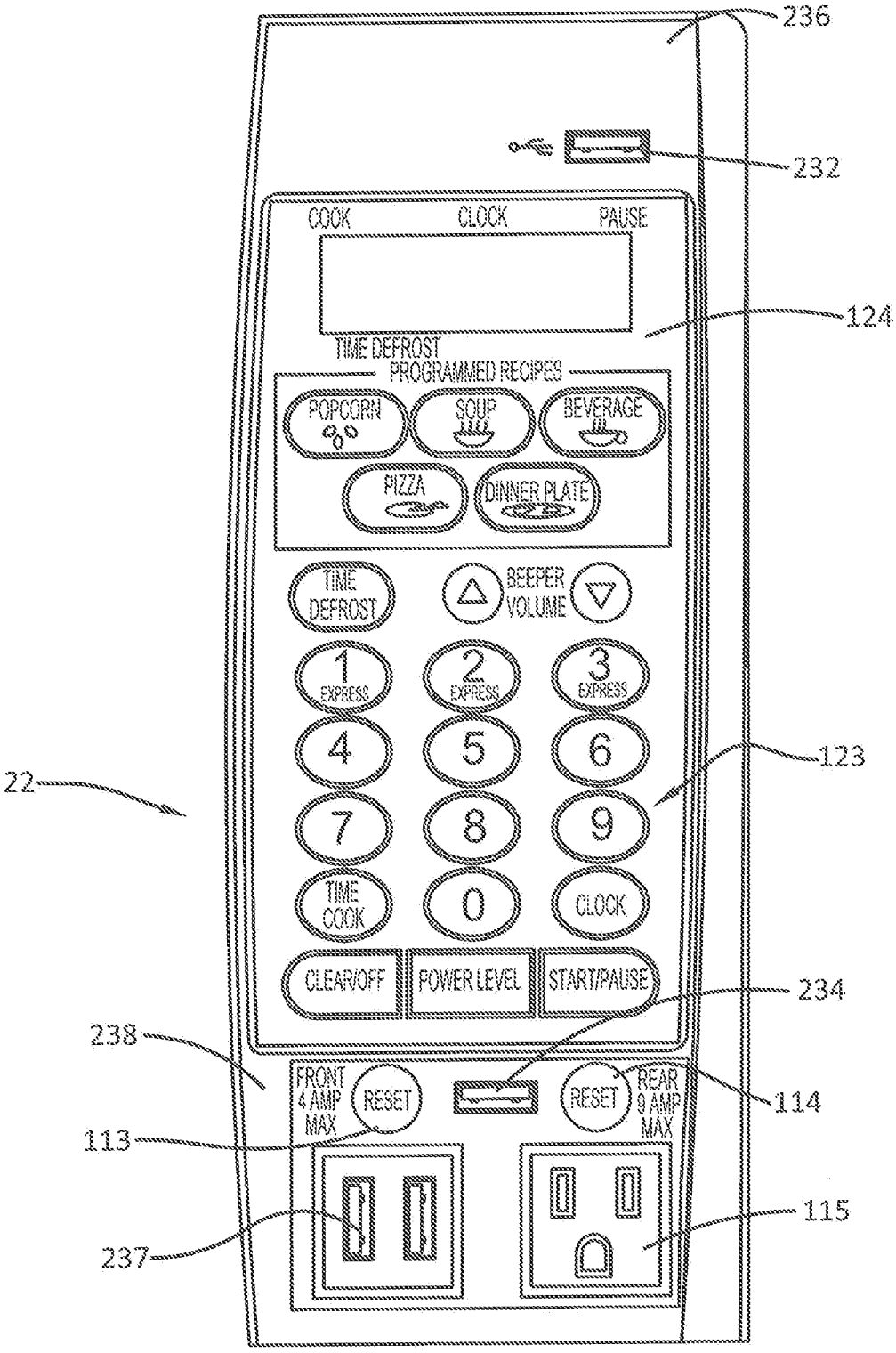
236
232
COOK
CLOCK
PAUSE
124
TIME DEFROST
PROGRAMMED RECIPES
POPCORN
SOUP
BEVERAGE
PIZZA
DINNER PLATE
TIME DEFROST
BEEPER VOLUME
1 EXPRESS
2 EXPRESS
3 EXPRESS
4
5
6
123
22
7
8
9
TIME COOK
0
CLOCK
CLEAR/OFF
POWER LEVEL
START/PAUSE
234
238
FRONT 4 AMP MAX
RESET
RESET
REAR 9 AMP MAX
114
113
115
237

FIGURE 27

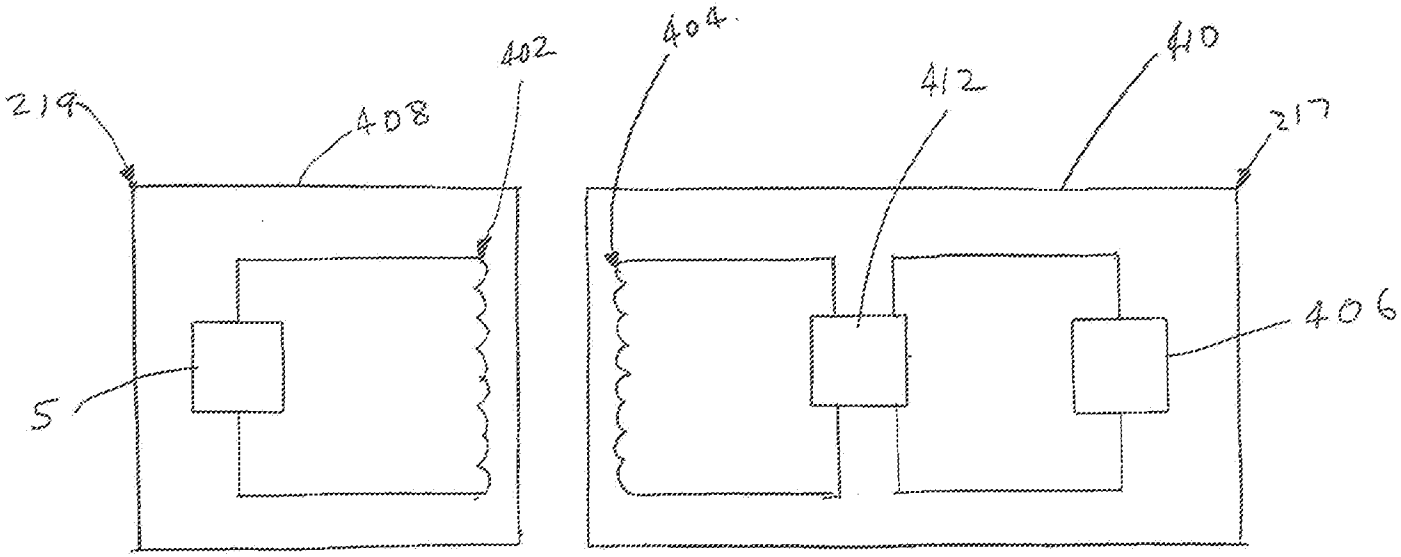

FIGURE 28

MULTIPLE LINKED APPLIANCE WITH AUXILIARY OUTLET

TECHNICAL FIELD

[0001] Exemplary embodiments relate to improvements to appliances. Specifically, exemplary embodiments relate to improvements to appliances that include compact refrigerator and microwave oven functionality.

BACKGROUND

[0002] Compact refrigerators are used for many different purposes. They are often found in dormitories, hotels, offices and other establishments. Compact refrigerators are also often used in housing units for storage of beverages in bar areas or entertainment areas. Compact refrigerators provide useful storage for refrigerated items without the requirement for the considerable floor space and power draw that is required for a full size refrigerator.

[0003] Compact refrigerators and associated appliances may benefit from improvements.

SUMMARY

[0004] In one exemplary arrangement, an appliance apparatus is provided that includes a microwave oven. The microwave oven includes a radiation emitting microwave element and a microwave housing. The microwave housing bounds a cooking interior area. The radiation emitting microwave element is operative to irradiate the cooking interior area. The apparatus also includes a refrigerator. The refrigerator includes refrigerator housing. The refrigerator housing bounds a cooled refrigerator interior area. The refrigerator housing is in fixed operative mechanical connection with the microwave housing. The refrigerator includes a refrigerant compressor, or other refrigeration technology. The refrigerant compressor is operative to compress a

refrigerant material. The refrigerant material is operative to cause cooling of the cooled refrigerator interior area. The apparatus includes at least one power control circuit. The at least one power control circuit is operative to cause electrical power to be selectively delivered to the microwave element and the compressor. One of the microwave element and compressor does not operate when the other of the microwave element and the compressor operates. A charging pad is provided on the microwave oven. The charging pad is configured for receiving an item to be charged by the charging pad. The microwave oven further includes at least one smoke sensor. In exemplary arrangements different types of smoke sensors may be used. An exemplary sensor includes a sensor emitter and at least one sensor receiver configured to receive radiation from the at least one smoke sensor emitter, wherein air of at least a portion of the cooking interior area extends intermediate of the at least one sensor emitter and the at least one sensor receiver. The apparatus also includes at least one safety circuit. The at least one safety circuit is in operative connection with the at least one sensor emitter, the at least one sensor receiver, and the microwave element. The at least one safety circuit is operative to cause the at least one sensor emitter to emit sensor radiation and the at least one sensor receiver to sense sensor radiation from the at least one sensor emitter while the microwave element operates during a cooking session. A determination is made that a transmission amount of sensor radiation from the at least one sensor emitter that reaches the at least one sensor receiver has fallen by at least a threshold amount during the cooking session, due to smoke in the cooking interior area. Responsive at least in part to the determination, the microwave element is no longer supplied with electrical power.
Other features may be included in exemplary arrangements.

BRIEF DESCRIPTION OF THE DRAWINGS

[0005] The system of the application is explained in more detail below with reference to the accompanying drawings, in which:

[0006] Figure 1 is a front perspective view of an exemplary arrangement of an appliance system.

[0007] Figure 2 is a rear perspective view of the arrangement of Figure 1 showing an alternative arrangement.

[0008] Figure 3 is a schematic block diagram of an arrangement of the exemplary system.

[0009] Figure 4 is an electrical schematic diagram corresponding to the arrangement of Figure 3.

[0010] Figure 5 is a schematic logic flow diagram of an exemplary arrangement.

[0011] Figure 6 is a schematic logic flow diagram of another exemplary arrangement.

[0012] Figure 7 is a schematic logic flow diagram of another arrangement.

[0013] Figure 8 is a graph illustrating the duty cycles of the components of the appliance in the system of Figure 3.

[0014] Figure 9 is a block diagram of an alternate arrangement.

[0015] Figure 10 is an electrical schematic diagram of the arrangement of Figure 9.

[0016] Figure 11 is an illustration of a control panel of the arrangement of Figure 9.

[0017] Figure 12 is a front view of the microwave oven according to another arrangement.

[0018] Figure 13 is a side view of the microwave oven door of Figure 12.

[0019] Figure 14 is a top perspective view of a charging pad on the top portion of a microwave oven.

[0020] Figure 15 is an illustration of a control panel of an alternate arrangement.

[0021] Figure 16 is an electrical schematic diagram of the arrangement of Figure 15.

[0022] Figure 17 is a front view of the microwave oven according to another exemplary arrangement.

[0023] Figure 18 is an electrical schematic diagram of the arrangement of Figure 17.

[0024] Figure 19 is a front view of the microwave oven according to another exemplary arrangement.

[0025] Figure 20 is an electrical schematic diagram of the arrangement of Figure 19.

[0026] Figure 21 is a rear view of the microwave oven according the arrangements of Figures 12-19.

[0027] Figure 22 is a similar view as that of Figure 21 except that the AC cord is shown.

[0028] Figure 23 is a schematic logic flow diagram of an exemplary arrangement.

[0029] Figure 24 is a front view of the microwave oven according to another exemplary arrangement

[0030] Figure 25 is a front view of the microwave oven according to another arrangement.

[0031] Figure 26 is a front view of the microwave oven according to another exemplary arrangement.

[0032] Figure 27 is an illustration of a control panel of an alternate arrangement.

[0033] Figure 28 is a schematic diagram corresponding to the arrangement of Figure 14 showing the charging pad and a device being charged.

DETAILED DESCRIPTION

[0034] A multiple linked appliance system 1, for example, an appliance that comprises a combination microwave oven 2 and refrigerator 3 incorporating features described in the present application illustrated in the Figures. Although exemplary arrangements will be described with reference to the features shown in the drawings, it should be understood that other arrangements may have many alternate forms. In addition, any suitable size, shape or type of elements or materials could be used. The computer or controller devices described in this application may be constructed having one or several processors and one or several program product modules stored in one or several memory elements. For illustration, computer or controller components may be described as individual units by function. It should be understood, that in some instances, these functional components may be separated or combined in other components.

[0035] In the exemplary arrangements, the circuits described herein may comprise one or more circuits including processors which for purposes hereof corresponds to any electronic device that is configured via circuit executable instructions that can be implemented in either hardware circuits, software, firmware or applications that are operative to enable the circuits to process data and carry out the other actions described herein. For example, the circuits may include circuits that correspond to one or more or a combination of a CPU, FPGA, ASIC or any other integrated circuit or other type or circuit that is capable of processing data. The processors may be included in a computer, server or other type of electronic device. Further, the circuits described herein may include data stores that correspond to one or more of volatile or

non-volatile memories such as random access memory, flash memory, magnetic memory, optical memory, solid state memory or other devices that are operative to store computer executable instructions and data. Computer executable instructions may include instructions in any of a plurality of programming languages and formats including, without limitation, routines, subroutines, programs, threads of execution, objects, methodologies and functions which carry out the actions such as those described herein. Structures for the circuits and processors may include, correspond to and utilize the principles described in the textbook entitled Microprocessor Architecture, Programming, and Applications with the 8085 by Ramesh S. Gaonker (Prentice Hall, 2002), which is incorporated herein by reference in its entirety. Of course it should be understood that these circuit structures are exemplary and in other embodiments, other circuit structures for storing, processing, resolving and outputting information may be used.

[0036] In exemplary arrangements the refrigerator may be connected to a power supply that provides a connection that enables the microwave oven to be connected to the same electrical supply. A single plug, therefore, may serve to connect both appliances and the current required for each appliance may be supplied by the same supply power cord and circuit. In exemplary embodiments power may be supplied by the 110V AC current outlet.

[0037] To make this combination attractive for use in dorm rooms, hotel rooms, recreational vehicles, tractor trailer cabs, and other similar locations, it may be necessary to assure that the peak current draws of both appliances are not demanded from the supply at the same time. Many household circuits are protected from overload conditions by an automatic circuit breaker that is activated when current in the circuit exceeds the breaker rating. This is 15 amps in many circuits.

[0038] The duty cycle of an exemplary refrigerator used in these combined appliance systems includes a current spike that occurs during the first few seconds of operation. This is the start up current for the refrigerator compressor. The current draw is

considerably reduced as the compressor attains its full operational speed. In typical refrigerator appliances the peak current may be in the range of 7 to 9 amps, while the steady state current may level off at 1.4 amps or less. A microwave oven demands a relatively steady 8 to 13 amps of cooking power during operation of the cooking element. It is apparent that an overload condition may occur when both appliances are placed in operation absent suitable control circuitry.

[0039] In an exemplary arrangement, a combination microwave and refrigerator appliance system is constructed having a single electrical plug input supply. The electrical supply in the exemplary arrangement is directly connected to the microwave oven. The microwave oven is adapted to provide power to the refrigerator through a power supply outlet, and to auxiliary receptacles adapted for connection to devices that operate at a low power operation draw. The microwave oven includes at least one control circuit including a processor based controller adapted to monitor operation of the refrigerator compressor and control the power to the microwave magnetron cooking element and other components. The current draws on the low power receptacles are separately monitored for control by the microwave controller. The microwave controller is adapted to balance the duty cycles of the connected appliances in operative connection therewith to avoid overload conditions. A control logic flow is implemented internally within the circuitry of the microwave controller. A receptacle or other power connecting power supply outlet for the refrigerator and the low power auxiliary receptacle may be implemented as part of the microwave control panel on the microwave oven.

[0040] In one arrangement, the auxiliary outlets are constructed to provide low power for the purpose of recharging batteries included in cellular mobile phones, personal media devices and digital cameras, in addition to operating lap top computers and other similar low power devices. The current to the auxiliary outlets is sensed by suitable circuitry in operative connection with the microwave controller.

[0041] In another exemplary arrangement, the power to the auxiliary outlets is disabled through operation of the microwave controller when the microwave magnetron is energized or whenever the current to the auxiliary outlets exceeds a preset value.

[0042] In one exemplary arrangement, a programmed control model for control logic flow is established and executed by the microwave controller. The model is dependent on the state of operation of the microwave cooking element or elements which are referred to herein as a magnetron. As part of the exemplary control model, the power draw of the compressor is monitored to sense operation of the compressor to compress refrigerant to provide cooling. When cooking power is demanded by the microwave the compressor is disabled by having electrical power thereto withdrawn by the at least one control circuit for a preset minimum period. When power demand to the magnetron ceases, refrigerator compressor power is restored provided that the preset minimum period has expired.

[0043] In another exemplary arrangement of the control model, sensing circuits are operative to monitor current draw on the auxiliary outlets. The control model is adapted to cause the controller to disable the power to the auxiliary receptacles, if the microwave magnetron is in operation. In addition the auxiliary receptacles are disabled if a predetermined maximum current draw is sensed. Another control model is based on operation of the refrigerator and operates to disable the auxiliary receptacles when the compressor is in the start up mode. Of course these approaches are exemplary and in other arrangements, other approaches may be used. Further while in the exemplary arrangement the at least one control circuit which is included in the controller is integrated with the microwave oven, in other arrangements the controller may be integrated with the refrigerator or other device, or may be configured as a separate component.

[0044] In one aspect of an exemplary arrangement, a non-transitory processor readable medium having processor executable program instructions embodied therein for operating at least one processor of a control circuit to control an appliance system of

multiple linked components including a microwave oven, a refrigerator, and an auxiliary power supply outlet is provided. The processor executable program code causes the control circuit to disable the refrigerator and the auxiliary power supply outlet, when the microwave demands high power such as magnetron cooking power, and enable power delivery from the auxiliary power supply outlet when the microwave is not drawing cooking power.

[0045] One exemplary arrangement of a multi-component interconnected appliance system 1 is illustrated in Figure 1. This arrangement consists of two components, a refrigerator 3 and a microwave oven 2. Refrigerator 3 is electrically connected to microwave oven 2 by power cord 7 to refrigerator receptacle 15, shown at the rear of the microwave 2 in Figure 2. Refrigerator 3 is generally subject to control by the microwave microprocessor controller which is alternatively referred to herein as a power control circuit 4 of the microwave oven 2. The power control circuit may be operative to cause electrical power to be selectively delivered to and/or withheld from the microwave magnetron and the refrigerator compressor. A single power cord 8 provides input electrical power to the system 1 from receptacle 5 which provides a source of electrical power, through microwave 2. In the case where stand alone components are used, as shown in Figures 1 and 2, microwave oven 2 is connected directly to power source 5. The refrigerator 3, as the heaviest component, is used as the base with the microwave oven 2 stacked on top. In the selection of the refrigerator 3, it would be advantageous in some arrangements for the height of the refrigerator to be no more than 48 inches above the floor. This provides a more ergonomic operation of the microwave oven 2 for the user. In addition, in the stacked position of the components in an exemplary arrangement, the doors 9 and 10 of the microwave 2 and refrigerator 3, respectively, are arranged in a common plane.

[0046] At least one power control circuit 4 serves as a controller for the operation of the microwave oven 2 and is also adapted to control the other components of system 1, as shown in Figure 3. Power is distributed throughout the system 1 under control of microwave controller 4 and digitally operated switches such as relays 19 and 20

represented in Figure 3. It should be understood that in some arrangements the relays may control power delivery via mechanical contacts while in other embodiments, solid state relays may be used. Power is distributed to each of the appliance components 2 and 3, and to auxiliary low power receptacles 11 and 12. In use lamps 13 and 14 in the form of LEDs or the like may be positioned adjacent to the auxiliary receptacles to indicate power being available from the adjacent receptacle or power to the receptacle being disabled. The low power auxiliary receptacles 11 and 12 are provided to permit convenient access for plugging in a low power device, for example, devices including rechargeable batteries, such as cellular phones, PDAs, or other electronic devices that do not demand high power. As shown in the graph of Figure 8, there are instances during which, if more than one of the appliances is in use, the cumulative current would cause an overload condition.

[0047] An exemplary control panel 22 of microwave oven 2 may be adapted to provide a display of the particular status of the controlling relays. For example, LEDs 13 and 14 may indicate that power to the outlets 11 and 12 are disabled or available. In one exemplary arrangement the lamps will light when power is available at the outlet and flash when disabled. In another exemplary arrangement the lamps will light when power is not available at the outlet and not activate when power is available at the outlet as a means to reduce the standby power draw. A button operated touch panel is used in the exemplary arrangement to provide manual control.

[0048] As shown in Figure 4, in order to control the power to the microwave 2, refrigerator 3 and receptacles 11 and 12, sensing circuits, may be coupled to the at least one control circuit to monitor current draw by the appliance components and the auxiliary receptacles. A relay 20 is connected in the power line to the refrigerator and may be actuated by signals from controller 4. In particular, according to an exemplary arrangement, sensing circuits 16, as shown in Figure 4, have sensors 17 and 18 coupled to the power line of the auxiliary outlets 11 and 12 to monitor the current being drawn by a connected device. Sensors 17 and 18 may include current sensing transformers of the type available from Triad Magnetics of Corona, Calif. The signals

generated by sensors 17 and 18 may be used to activate switches or other control components, such as relays 19. Relays 19 may be actuated by the at least one control circuit 4 to enable and disable the delivery of power to the low power auxiliary outlets 11 and 12 in response to signals from sensors 17 and 18. A maximum current may be set through the program logic associated with the at least one power control circuit 4 to prevent overload of the outlets 11 and 12. In one arrangement of the system, the maximum current limit is set at 2 amps, and the control circuitry is operated to cease power delivery in situations where the power draw exceeds this amount. Of course this approach is exemplary.

[0049] In another exemplary arrangement, a clock function 21 included in the at least one power control circuit 4 is used to provide timed delays during which, for example, refrigerator 3 would be prevented from undesirably rapid on/off cycles. When the compressor of the refrigerator 3 is disabled during microwave cooking operation, a time delay of 3 minutes is provided during which the compressor of the refrigerator 3 will remain disabled, even if microwave use is only for a short period. Control circuit 4 may be programmed to manage the power delivery to the components of the appliance to avoid overload conditions, while minimizing disruptions in the use of an individual appliance component. A model of operative events and related control operations may be designed into the program instructions executed by at least one control circuit 4 to provide a control methodology as illustrated in Figures 5-7.

[0050] In one exemplary arrangement, as illustrated in the block diagram of Figure 3, at least one control circuit 4, constructed as part of the controller for microwave 2, is adapted to receive and process the sensor signals and identify particular events in the system 1 related to a particular appliance component or combination of appliance component conditions. Circuit 4 controls the power to microwave 2 and refrigerator 3 and also low power receptacles 11 and 12 to avoid overload conditions. The circuit 4 is operative to execute the control methods illustrated and described below. In one exemplary arrangement, the circuit 4 is operative to control operations of microwave oven 2 and is adapted to execute the program instructions described below. The at

least one control circuit is coupled directly to refrigerator outlet 15 and low power outlets 11 and 12.

[0051] In one exemplary arrangement, shown in Figure 1, the outlets 11, and 12, are included as part of the front control panel of microwave oven 2. In Figure 2, in another arrangement, the auxiliary receptacles 11 and 12 and refrigerator receptacle 15 are accessible at the rear of the microwave oven 2. In these alternative arrangements, the microwave oven 2 is connected by supply cord 8 directly to power supply receptacle 5. Refrigerator 3 is connected by power cord 7 to receptacle 15 on microwave oven 2 as shown in Figure 2.

[0052] In one exemplary arrangement, control models for program logic flows are established as shown in Figures. 5-7 for execution by the at least one control circuit 4. These models can be in the form of processor executable instructions stored in a computer readable medium, such as software or firmware associated with the circuit 4. The models shown are, in the first instance, dependent on the state of operation of microwave oven 2. The current demands of the microwave 2 when drawing cooking power are generally the most significant contribution to overload, as shown in Figure 8. To avoid overload conditions, power to the low power receptacles 11 and 12 and refrigerator receptacle 15 is disabled during microwave magnetron operation. If the refrigerator 3 compressor is drawing power when the microwave 2 is turned on to commence cooking, the power to the refrigerator compressor is turned off and clock function 21 is used to determine a predetermined period during which the compressor of refrigerator 3 cannot be restarted. A time delay, for example, of 3 minutes, may be set through programming of the at least one control circuit and when this delay period has expired, receptacle 15 may again be enabled, providing the control circuit determines in accordance with its programming and sensed parameters that microwave cooking operation has ceased. This prevents a too rapid restart of the compressor that may otherwise result in damage.

[0053] In some exemplary arrangements, the at least one control circuit of the power controller may operate responsive to sensing the power draw of the refrigerator and the cooking element of the microwave oven so as to detect the power draw reaching a threshold which should not be exceeded to prevent an overload condition. In other exemplary arrangements, the control circuitry may operate to detect inputs that may be provided by input devices and which are operative to cause power drawing components of devices such as the magnetron of the microwave oven or the compressor of the refrigerator to operate. In such arrangements, the control circuitry may operate to detect the signal from a thermostat within the refrigerator which indicates that the thermostat is signaling that the refrigerant compressor should operate to cause the temperature to be lowered within the cooling area of the refrigerator. In such arrangements, the at least one control circuit may operate to detect the signal from the thermostat and prevent the delivery of power to the compressor in situations where the cooking element of the microwave oven is operating. In such arrangements the control circuitry may delay the supply of power to the compressor until the cooking element of the microwave oven has ceased operation. Likewise in an exemplary arrangement the at least one control circuit may be operative to detect inputs to at least one input device of the control panel of the microwave which are provided by a user to commence microwave operation. In response to the detection of such inputs, the exemplary control circuitry may be operative to first cause a determination to be made as to whether the refrigerator is drawing the level of power that indicates that the compressor thereof is operating. In response to a determination that the refrigerator is drawing a level of power that is incompatible with operation of the microwave cooking element, the exemplary control circuitry may be operative to cause power to the refrigerator compressor to be withdrawn. Thereafter the at least one control circuit may be operative to cause power to be supplied to the cooking element of the microwave. Further in exemplary arrangements, the at least one control circuit may also monitor the power draw of auxiliary outlets or other power delivery points to assure that the level of draw that is currently occurring will not be an impediment to an operation that is being requested by an input device of the apparatus before the apparatus begins to operate in a manner

that will cause increased power draw. Thus the exemplary appliance apparatus enables the preventative action of discontinuing operation of a power drawing component before instituting operation of another component that draws a high level of power. Of course it should be understood that this approach is exemplary and in other arrangements, other approaches may be used.

[0054] In the arrangement shown in Figure 5, if low power is demanded at receptacle 11 or 12 and microwave oven 2 is not in use for cooking, power is supplied to the low power receptacles, provided further, that the current demand at an individual outlet does not exceed a preset limit, for example, 2 amps. Since the auxiliary outlets may be enabled during refrigerator compressor operation, there may be an overload generated at peak compressor operation. In one arrangement the at least one control circuit acts to disable the auxiliary outlets during compressor startup to prevent accidental overload of the system. Therefore as illustrated in the logic flow diagram of Figure 5, control circuitry may be adapted to check the operational status of the refrigerator, as well as the microwave oven, prior to enabling the auxiliary outlets.

[0055] Figures 9-11 illustrate another exemplary arrangement. In this arrangement the sensing components 117 and 118 are configured to reduce the risk of overload by the combined demands of the auxiliary outlets 111 and 112 and the refrigerator outlet 115. In the exemplary configuration as shown in Figure 10, current sensor 117 is configured to monitor the current draw through the refrigerator outlet 115 and the circuitry is operative to limit the refrigerator current draw at the outlet 115 so that it does not exceed 10 amps. Current sensor 118 is connected to monitor the combined current in the auxiliary outlets 111 and 112. Current sensor 118 and the control circuitry is configured to limit the combined auxiliary outlet current draw to 4 amps. In this manner the risk of overload is minimized. As represented in the block diagram of Figure 9, the microwave 102 has at least one control circuit comprising controller 104 that is operatively connected to power supply 105. Clock function 121 which is shown schematically separately but may be part of the controller provides a timing device to determine a restart delay for power to refrigerator 103. Sensing

circuit/sensor 117 is configured to monitor the current demanded by refrigerator 103 and sensing circuit/sensor 118 is connected to low power receptacles 111 and 112 is operative to monitor the combined current draw on receptacles 111 and 112. In the exemplary arrangement the control circuitry is shown as operative to control the availability of electrical power to some devices as a whole. For example, if the at least one control circuit operates to cause power not to be available to the refrigerator, all components of the refrigerator, such as the internal lights, air circulation fan, etc., are not supplied with electrical power, in addition to the compressor, which is the component which is most likely to draw power at a level which may be excessive. However in other arrangements, the at least one control circuit may be configured to deliver and withhold power selectively to individual refrigerator components or groups of such components. Thus in such arrangements the power control circuitry may be operative to withdraw power to the high power draw component(s) such as the compressor, while still making power available to other low power draw components such as the internal fan and/or lights.

[0056] Likewise in exemplary arrangements, the power control circuitry is operative to selectively allow power to be available or withdrawn from components of the microwave oven. For example, exemplary arrangements control the availability of power to selected components of the microwave oven such as the magnetron and the auxiliary outlets. The at least one power control circuit of exemplary arrangements may operate to maintain electrical operation of certain components, even though electrical power to other components is not available. For example, an exemplary controller may operate to maintain power to the clock display output on the control panel at all times. Further some exemplary arrangements may assure that power is maintained to control circuitry with programmed settings so that programmed data is not lost. This may include for example programmed data concerning a future time to turn on the cooking function, the power level and/or how long to cook. This way if the memory of the microwave has been programmed to begin to cook a food item placed inside the microwave oven at a future time so it is cooked by the time a person returns (for example) the programmed instructions to carry out those instructions will

not be lost. Alternatively, configuration data that enables the microwave oven controller to communicate in a wireless network or with other devices will be preserved even though the control circuitry operates to cause electrical power not to be available to certain components. Of course these are merely examples.

[0057] It should be understood that for purposes hereof when it is stated that power is withdrawn or not made available to a microwave oven, refrigerator or other assembly of components, the terminology refers to not making such power available to the entire assembly or to only certain selected components that draw high power such as the refrigerant compressor or magnetron. Likewise herein references to the microwave or the refrigerator operating or running refers to operation of the respective high power draw components such as the magnetron or the compressor, for example.

[0058] In an exemplary arrangement, as shown in Figure 11, a control panel 122 is arranged with at least one input device in the form of a keypad 123 for manual control and a display 124. Auxiliary outlet 111 is shown as accessible from the front and is associated with a status LED indicator and reset button 113 that may be caused to be operative during use and switch to a flashing mode when the microwave is drawing cooking power. Refrigerator outlet 115 is also accessible on the exemplary front panel and is associated with an LED indicator and reset button 114. Similarly LED indicator 114 is controlled to be on by being illuminated during use of the refrigerator and to switch to a flashing mode when the microwave is drawing cooking power. In another exemplary arrangement, the status LED indicator and reset button 113 may be caused to be off during use and switched on or to a flashing mode when the microwave magnetron is drawing cooking power. Similarly, in this arrangement, the LED indicator 114 is controlled to be off during operation of the refrigerator compressor and switched on or to a flashing mode when the microwave radiation cooking element is operating.

[0059] A further exemplary arrangement of the logic flow operational model is shown in Figure 6. In this model, the refrigerator compressor draws or demands power. This may be triggered by a temperature rise of the refrigerator interior area within the housing of the refrigerator and involve start up of the refrigerator compressor with an associated peak power demand. If the microwave cooking element is sensed by the control circuitry as currently drawing cooking power, the programming of the control circuitry causes power not to be available the refrigerator so that operation of the refrigerator compressor will be delayed. If the microwave cooking element was on and subsequently cycled off, the clock function 21 must be checked by the controller to determine if power availability to the refrigerator to restart can occur. Under some circumstances, it may be necessary to give the refrigerator compressor priority to prevent an undesirable rise in temperature. In the latter instance, the at least one control circuit can be coupled to the refrigerator temperature sensor to execute a programmed sequence during which the microwave cooking element will be disabled by not having power supplied thereto to allow the refrigerator to operate long enough to return to proper operating temperatures.

[0060] In the exemplary arrangement of Figure 7, the exemplary control circuitry operates to give priority to the power demands of the microwave oven, as indicated above. Use of the receptacles 11, 12, and 15 are, therefore, caused to be disabled during microwave cooking operation. The operational models which carry out the logic represented in Figures. 5-7, may be established by logic flows implemented by instructions that are programmed or imbedded in the control circuitry of controller 4.

[0061] In this manner an appliance system of linked components, including a microwave oven, refrigerator, and at least one low power draw device or appliance may all be connected through a common supply cord to a releasably connectable receptacle providing a source of house current or other electrical power level without the risk of inconvenient interruptions or damage during use caused by overloads.

[0062] It is also advantageous to provide such a combination microwave/refrigerator system that also provides auxiliary outlets for low power applications, such as for the purpose of recharging batteries in cellular phones, operating lap top computers and other low power devices, while controlling the operation of the appliance to avoid overload conditions.

[0063] In another exemplary arrangement as illustrated in Figures 12 and 13, the auxiliary outlets or electrical power receptacles 211, 212 may be included as part of the front control panel 222 of the microwave oven 202 and located on the upper portion 270 of the front control panel 222. The auxiliary outlets 211, 212, front control panel 222 and microwave oven 202 are similar to auxiliary outlets 11, 12, front control panel 22, and microwave oven 2 except as discussed below. In this exemplary arrangement, the auxiliary outlets 211, 212 are positioned side by side with respect to each other with each of the auxiliary outlets 211, 212 being at the same height as the other. The auxiliary outlet 211 of Figure 12 may be associated with a status LED indicator and reset button 213, which is located on the lower portion 272 of the front control panel and in vertical alignment with the auxiliary outlet 211. The status LED indicator and reset button 213 may be caused by the control circuitry of the controller to be on during use and switched to a flashing mode to indicate that power is not available therefrom when the microwave oven 202 is drawing cooking power. The auxiliary outlet 212 of Figure 12 may be associated with status LED and reset button 214, which is located on the lower portion of the front control panel and in vertical alignment with the auxiliary outlet 212. The status LED indicator and reset button 214 may be caused by the controller to be on during use and switched to a flashing mode to indicate that power is not available therefrom when the microwave oven 202 is drawing cooking power thereto is withdrawn. In another exemplary arrangement, the status LED indicator and reset button 213 may be caused to be off during the time power is available for use and switched on or to a flashing mode when the microwave oven is running and power thereto is withdrawn. Similarly, in another arrangement, the status LED indicator and reset button 214 may be caused to be off during power availability and switched on or to a flashing mode when the microwave oven is

running or the refrigerator is running and the controller causes power not to be available. Other elements and operational features may be similar in structure and function as that of the arrangements shown in Figures 1-11. Thus, the same reference numbers will be used in this exemplary arrangement to indicate elements that are similar in the arrangements shown in Figures 1-11.

[0064] Smart technology may be integrated in some of the exemplary arrangements. For example, a user may be able to monitor and/or control the refrigerator 3 such as by turning it on and off remotely by a remote device 217. The remote device 217 may include a hand held device such as a cellular phone. The cell phone may also be a smart phone. In some exemplary arrangements, the refrigerator, the microwave and/or the controller may include circuitry suitable for communication in a wireless network. Such a wireless network may be established in the facility, residence, office or other location where the combined refrigerator and microwave appliance is operated. Such devices may include circuitry that enables transmission of wireless signals to and from such components. Such communications may include communications of operational properties such as operating status, temperature, programmed values or other information that is pertinent to the operational condition of the particular device. In further exemplary arrangements, circuitry may be operative to enable received wireless messages to modify the operational condition and/or the programming of the particular device.

[0065] For example in some exemplary arrangements, the user may be able to communicate from a wireless phone via cellular or WiFi connection to determine that the refrigerator is operating, the temperature therein, the operational status of the compressor or other items. Alternatively and/or in addition, the user may be able to remotely control components of the refrigerator. These may include, for example, the ability to remotely turn on the internal light within the refrigerator and to view the food items currently housed within the refrigerator via one or more electronic cameras positioned therein. This may enable a user, for example, to determine that they need to purchase additional groceries or other items for purposes of an upcoming

meal or other activities. Alternatively and/or in addition, in some exemplary arrangements, instructions may be utilized to change the temperature within the refrigerator. This may be done, for example, to chill certain grocery items that may need to be cooled or frozen for certain purposes. Of course these approaches are exemplary.

[0066] Likewise the microwave oven may include interface circuitry which enables the remote monitoring of the condition of the microwave oven components via a remote wireless device. This may include, for example, determining the periods of past operation and current status of the microwave oven such as whether it is currently being used to cook items. Alternatively and/or in addition, the remote monitoring capabilities may include determining the programmed status of the controller of the microwave oven such as the controller being programmed to cook an item housed in the microwave oven at a set future time or for a particular duration at a particular power level. Alternatively and/or in addition, the remote operational capabilities associated with the microwave control circuitry may include the ability to turn on an internal light within the cooking chamber of the microwave oven and to view via a camera whether an item is contained therein. Further such remote capabilities may also include the ability to remotely change the program parameters so as to initiate cooking at a different time or at a different power level. Likewise exemplary arrangements may include having the wireless interface in operative connection with the at least one power control circuit to provide the ability to monitor the current status of power draw on auxiliary outlets, the occurrence of alarm conditions, or the current status of other connected devices. It should be understood that such capabilities may be implemented in the controller circuitry or in separate circuitry of the microwave oven and/or the refrigerator. Further the exemplary arrangements may utilize communications interface capabilities included in circuitry of the controller to facilitate monitoring and operational control of the appliance. Of course these capabilities are exemplary and in other arrangements, other approaches may be used.

[0067] In an exemplary arrangement a charging pad 219 (Figure 14) may be provided on the microwave oven 2 or other suitable location to receive a smart phone or other chargeable device for purposes of charging the device. For example, a wireless charging pad 219 may be positioned on top 225 of the microwave oven 2 for recharging the smart phone or other device. The charging pad 219 may be built into the top 225 of the microwave oven 2 or may be a separate component that is mounted to the top 225 of the microwave oven 2 or other location. The exemplary charging pad 219 includes an inductive charging pad and includes a recessed area 220 for receiving an item to be charged such as the smart phone. The at least one control circuit may include or be in operative connection with a wireless interface 221 configured for communicating with the remote control device 217 for controlling the microwave oven or refrigerator and work in conjunction with the control circuitry to perform functions such as removing the supply of electrical power to the microwave oven 2 and/or refrigerator 3. In an exemplary arrangement, USB ports 223, 224 may be provided in the area of the charging pad 219. Alternatively, or in addition, power outlets may be provided in proximity to the charging pad 219. Alternatively, the charging pad 219 may be provided on the front, side, rear or bottom of the microwave oven 2, or at another suitable location in connection with the combined appliance structure.

[0068] The exemplary charging pad 219 may utilize inductive or wireless charging, which uses an electromagnetic field to transfer energy between the charging pad 219 and the device being charged. In general, the charging pad 219 may include a primary inductive coil 402 (Figure 28) in connection with circuitry that is operative to create an alternating electromagnetic field that is received by a secondary inductive coil 404 (Figure 28) connected to the circuitry of the device being charged such as device 217. Power from the electromagnetic field is converted back into electric current to charge a battery 406 (Figure 28) in the device. Figure 28 shows an exemplary arrangement in which the charging pad 219 utilizes inductive charging to charge the device 217. In this arrangement, the charging pad 219 includes an inductive charging station 408

and the primary inductive coil 402. The power source 5 provides electrical power to the inductive charging station 408 and the other components of the charging pad 219.

[0069] The inductive charging station 408 is provided for inductively charging the device 217 and may be built into or otherwise attached to the charging pad 219. The inductive charging station 408 may include the primary inductive coil 402 that is connected to the power source 5 for the microwave oven 2. The recessed area 220 may define a cover of the charging pad 219 that covers the primary inductive coil 402 and provide a surface on which the remote device 217 may be placed for charging. The inductive charging station 408 may also include one or more capacitors coupled in series and/or parallel with the primary inductive coil 402 to form an LC circuit. The inductance value of the primary inductive coil 402 and the capacitance value of the capacitor or capacitors may be selected to achieve a desired resonant frequency which corresponds to a frequency of a coil and circuitry in the device being charged, but it should be noted that this exemplary arrangement is not limited to any particular inductance and/or capacitance values and/or any particular power source ratings.

[0070] The device 217 or other device to be charged may include the battery 406 that provides electrical power to the components and circuitry of the device. The battery 406 may comprise a rechargeable battery or batteries including lead acid, nickel cadmium (NiCad), nickel metal hydride (NiMHi), lithium ion (Li-ion) or lithium ion polymer (Li-ion polymer) batteries. The device may include any number of batteries, the size and rating of which may vary. The battery 406 may also comprise power conduits, connectors, receptacles, battery connectors, or power cables coupled with batteries.

[0071] The device 217 or other device to be charged may include an inductive charger 410 for charging the battery 406 when the device 217 is placed on or in the vicinity of the inductive charging station 408 of the charging pad 219. The inductive charger 410 may be built into or otherwise attached to the device to be charged. As schematically represented in Figure 28, the inductive charger 410 may include the secondary

inductive coil 404 and a charging circuit 412 that is connected to the battery 406. The inductance value of the secondary inductive coil 404 may be selected to correspond or complement the inductance value of the primary inductive coil 402, but it should be noted that in exemplary arrangements the secondary inductive coil is not limited to any particular inductance value. Likewise, the power rating of the charging circuit 412 may be selected to match or complement the rating of the battery 406. The two inductive coils 402, 404 in proximity combine to operate in a manner similar to the principles employed in an electrical transformer. Further in some arrangements greater distances between primary and secondary inductive coils and/or more effective charging can be achieved when the inductive charging system uses resonant inductive coupling. Of course the described approaches are exemplary and in other arrangements other approaches may be used. In some exemplary arrangements the charging pad may be in operative connection with the at least one control circuit that controls power availability to components of the device. For example, the control circuitry may operate in accordance with its programmed instructions to cause power to not be available to the charging pad when the microwave draws cooking power. Alternatively or in addition the control circuitry may be operative to cause power not to be available to the charging pad responsive to power draw by the refrigerator compressor, the auxiliary outlets or other items, and/or cumulative power draw of multiple items.

[0072] As shown in Figures 16, 18, and 20, a safety sensor which is alternatively referred to herein as a safety circuit 226 such as a smoke or gas sensor may be provided in connection with the microwave oven 2. The smoke sensor 226 operates in connection with exemplary at least one control circuit to turn off the microwave oven upon sensing smoke or polluted air indicative of a potentially dangerous condition such as excessive smoke generated from overcooked food. The exemplary safety sensor 226 may be powered on or otherwise operational when the microwave oven is in operation. The sensor circuitry may operate responsive to processor executable instructions to determine the optimal activation point. The exemplary smoke sensor may be battery-powered or powered by the house current that powers the combined

appliance with an optional battery backup when the power from the house current is out. The smoke sensor may include an ionization smoke sensor that uses a radioisotope, typically Americium-241, to ionize air. The exemplary ionization smoke sensor circuitry operates to turn off power to the magnetron cooking element of the microwave oven upon sensing a difference due to smoke indicative of a potentially dangerous condition. The smoke sensor alternatively may include a radiation type smoke detector that may contain a source emitter of infrared, visible, or ultraviolet light (typically an incandescent light bulb or light-emitting diode), a lens, and a photoelectric or other type of radiation sensing receiver (typically a photodiode) and suitable control circuitry.

[0073] An exemplary sensor 226 may include an alcohol sensor that is coupled with a thermistor 228. An exemplary alcohol sensor 226 may operate in a set temperature range, such as from 32 to 104 degrees Fahrenheit. When a set level of heating is sensed by the thermistor 228, the thermistor 228 through suitable control circuitry causes the alcohol sensor 226 to turn on and become operational and check for properties of the gas within the interior area of the microwave.

[0074] If the exemplary alcohol sensor 226 is operational due to the sensing of the set level of heating and senses polluted air that is indicative of a dangerous condition, a shutdown signal is outputted by the alcohol sensor to the controller 104. Upon receiving the shutdown signal, the controller 104 determines that the radiation cooking emitting element of the microwave oven 2 should be shut down and causes the magnetron of the microwave to shut down through the withdrawal of electrical power. If (after the alcohol sensor is caused to be turned on by the thermistor) the alcohol sensor 226 senses air that is not indicative of a dangerous condition such as the air produced by normal cooking of food in the microwave oven 2, the alcohol sensor circuitry will not send a shutdown signal to the controller 104 and the controller allows the microwave cooking activity to continue.

[0075] Alternatively or in addition, a fault indicator 230 may be coupled to the control circuitry of the controller 104 or other circuitry to indicate that there is a dangerous condition upon detection by the alcohol sensor 226. For example, the fault indicator 230 may be an audible indicator such as a buzzer that is activated in response to the alcohol sensor 226 sensing polluted air indicative of a dangerous condition. In another example, fault indicator 230 may include the display 124 displaying a fault message such as "E-1" in response to the alcohol sensor 226 detecting polluted air indicative of a dangerous condition. Alternatively the fault indicator may output one or more signals, such as wireless alarm signals that can be detected by a receiver of an alarm system or through a remove device such as a smart phone.

[0076] An exemplary arrangement may include a combination of fault indicators. For example, upon the alcohol sensor 226 sensing air that is indicative of a dangerous condition, a shutdown signal is outputted by the alcohol sensor 226 to the controller 104. Upon receiving the shutdown signal, the controller 104 determines that the microwave oven 2 should be shut down and causes the radiation emitting cooking element of microwave oven 2 to be shut down. In addition in an exemplary arrangement, a buzzer is activated and the display 124 displays a fault message such as "E-1" in response to the alcohol sensor 226 sensing polluted air indicative of a dangerous condition.

[0077] The alcohol sensor 226 may be reset automatically responsive to the alcohol sensor 226 no longer detecting gas indicative of the dangerous condition. Alternatively or in addition, the alcohol sensor 226 may be reset upon sensing by a suitable switch, opening of the microwave door 9 of the microwave oven 2. The display may display a "bar" or other suitable icon to indicate that the alcohol sensor 226 is turned on. Other types of suitable safety sensors may also be used instead of the alcohol sensor to detect a dangerous condition within the cooking area of the microwave.

[0078] In addition to one or more sensors which detect the gases generated from cooked food, the sensor 226 may include a temperature sensing capability such as, for example, using the thermistor 228 and related elements mentioned above.

[0079] Referring to Figure 24, in another exemplary arrangement, the safety sensor which is alternatively referred to as a safety circuit may comprise an infrared sensor 326. The infrared sensor 326 may include two oppositely positioned infra-red disposed infrared sensor elements in the form of a sensor emitter 328 and sensor receiver 330 (schematically shown in Figure 24) provided on the microwave oven and located in the microwave's cavity 332. The exemplary infrared sensor 326 operates as follows. The sensor emitter 328 emits radiation and the sensor receiver 330 senses sensor radiation from the sensor emitter 328 while the microwave element operates during a cooking session. When smoke that is indicative of a dangerous condition passes in between the infrared sensor elements 328, 330, a determination is made by the safety circuit that a transmission amount of sensor radiation from the sensor emitter reaching the sensor receiver has fallen by at least a programmed threshold amount during the cooking session, due to smoke in the cooking interior area. Responsive to the determination, the cooking element of the microwave oven is caused by the safety circuit to be no longer supplied with electrical power. The exemplary safety circuit may use the smoke point of oil or similar food products as the basis for its threshold amount, so that normal smoke emitted during the cooking or heating of food or beverages will not cause the infrared sensor 326 to deactivate cooking operation. The exemplary infrared sensor 326 would not require interaction from the microwave user. The exemplary safety sensor may be operative to cause an initial transmissivity level of sensor radiation that reaches the sensor receiver from the sensor emitter early in the cooking session to be stored in a data store or other memory associated with the safety circuit. The determination of a level of smoke corresponding to a dangerous condition is made in this embodiment responsive to circuitry operating in accordance with programmed instructions to detect that the transmission amount of sensor radiation reaching the sensor receiver has dropped by the threshold amount from the initial transmissivity level during the cooking session.

[0080] Referring to Figure 25, in another exemplary arrangement, the safety sensor or safety circuit may comprise a light sensor 334, which detects the increase smoke density within the microwave's cooking area which is alternatively referred to as a cavity. The light sensor 334 may also include a sensor emitter and sensor receiver. The light sensor 334 may be provided in the microwave cavity 332 and may operate as follows. At the beginning of a cooking cycle, the light generated travels through the clean air to the light sensor 334. As smoke increases in density, the amount of light that reaches the sensor receiver is reduced. The circuitry of light sensor 334 includes a programmed trip point or threshold that corresponds to the reduced amount of light sensed caused by the amount of smoke, that is indicative of a dangerous condition. When the trip point is reached, the safety circuit causes the electrical power to the radiation emitting cooking element to be withdrawn. A circuit determination would be made based on the amount of smoke that corresponds to the trip point and its corresponding light sensor reading.

[0081] Referring to Figure 26, in another exemplary arrangement, the safety sensor may include an optical motion sensor 336. The optical motion sensor 336 may also include a sensor emitter and sensor receiver. The optical motion sensor 336 may be positioned in the microwave cavity 332 adjacent air exhaust vents 338, 340 of the microwave, which comprises an air passage that connects an area where food is cooked in the microwave oven to the air outside the housing of the microwave oven. The optical motion sensor 336 detects motion which is sensed due to the presence of smoke blown by an exhaust fan 342 of the microwave oven 2 through the air passage. The exhaust fan 342 is operative to cause air to move in the air passage connected to the microwave cavity. In an exemplary arrangement, the sensor emitter and sensor receiver are positioned to be operative to sense the transmission of radiation between the emitter and the receiver in the air passage. The optical motion sensor 336 has a trip point or threshold that corresponds to the presence of smoke of a predetermined density that corresponds to a reduced level of transmission that is indicative of a dangerous condition. When the trip point is reached, the optical motion sensor in

combination with the control circuitry causes the cooking element of the microwave oven to be turned off. It should be noted that the exemplary optical motion sensor is not be positioned within the microwave cavity and directed toward a turntable therein, since the turntable itself may result in false alarms in some configurations. Of course it should be understood that other types of smoke sensors may be positioned in air passages in other alternative arrangements.

[0082] Alternative arrangements may include other types of smoke sensors. For example, some arrangements may include sensors that are operative to detect smoke by determining the level of volatile organic compounds (VOCs) in the air in the microwave oven cooking area. In some exemplary arrangements such VOC sensors may be positioned to sense air in at least a portion of the microwave cooking area. In some cases such VOC sensors may be positioned in an air passage that extends between the microwave cooking area and the air in the atmosphere outside the microwave. Such an arrangement may have an advantage in that positioning the sensor in the air passage may minimize the amount of cooking splatter and other contamination from the food cooked in the microwave oven that reaches the sensor.

[0083] Some exemplary arrangements may include a VOC sensor that comprises a tin dioxide semiconductor gas sensor. In some arrangements the semiconductor is formed on an alumina substrate with a thick film heater of ruthenium oxide on the reverse side. Of course this configuration is exemplary and in other arrangements other configurations and VOC sensor types may be used.

[0084] In exemplary microwave oven arrangements VOC sensors may be operated in conjunction with at least one suitable control circuit to detect conditions which correspond to a dangerous smoke condition. Such a dangerous smoke condition is determined responsive to the level of VOCs, such as carbon dioxide and/or carbon monoxide in the air in the cooking area of the microwave oven. Such compounds may generally indicate the presence of combustion which is corresponds to a potentially dangerous condition. Responsive to detecting a threshold VOC concentration in the

air of the cooking area, the control circuitry in operative connection with the sensor is operative to cause power to be withdrawn from the magnetron of the microwave oven so as to prematurely end a current cooking session before the set and time thereof. In exemplary arrangements, the sensitivity of the VOC sensors is sufficient to detect a developing potentially dangerous condition and cause power to be withdrawn from the microwave cooking element before a fire or other condition causes damage to the microwave oven. This enables the sensor circuitry to reset when the dangerous smoke condition is no longer detected and enable the microwave oven to operate in a subsequent cooking session.

[0085] In some exemplary arrangements multiple sensors in operative connection with detection circuitry is utilized to determine the activation point for an alarm condition based on detection of parameters such as humidity, temperature, temperature rate of change, and gas constituents generated during cooking phases. Combinations of absolute and relative values and rates of change thereof may be detected for purposes of evaluating possible alarm conditions. Other types of sensors that may be used in exemplary arrangements include flame sensors. Flame sensors are operative, detect and provide signals indicative of the presence of a flame or fire. Upon the flame sensor detecting the presence of a flame, the flame sensor causes at least one control circuit to discontinue electrical power to the microwave oven cooking element. In some arrangements the flame sensor may take the form of an optical flame sensor. The flame sensor may be of the type that utilizes ionization current flame detection. Alternatively, the flame sensor may be of the type that utilizes thermocouple flame detection.

[0086] Alternatively or in addition, the fault indicator 230 may be coupled to the controller 104 or other circuitry to indicate that there is a dangerous condition upon detection of a potentially dangerous condition by any of the infrared sensor 326, light sensor 334, optical motion sensor 336, or flame or fire sensor in the arrangements described above. For example, the fault indicator 230 may be an audible indicator such as a buzzer that is activated in response to the safety sensor 226 sensing polluted air

indicative of a dangerous condition. In another example, fault indicator 230 may include the display 124 displaying a fault message such as "E-1" in response to the safety sensor 226 detecting polluted air indicative of a dangerous condition.

[0087] Exemplary arrangements may include a combination of fault indicators. For example, upon the trip point or threshold value being reached by any of the detection circuitry of the infrared sensor 326, light sensor 334, or optical motion sensor 336, a shutdown signal is outputted by the sensor 226 to the controller circuitry 104. Upon receiving the shutdown signal, the controller 104 determines that the microwave oven 2 should be shut down and causes electricity to be withdrawn from the cooking element. In addition, a buzzer is activated and the display 124 displays a fault message such as "E-1" in response to the sensor 226 sensing polluted air indicative of a dangerous condition. In other exemplary arrangements, the controller or other circuitry may be operative to output signals that can be communicated to a remote location, indicative of an alarm condition that is detected through one or more detection circuits of the microwave oven or other connected devices. This may include, for example, the circuitry dispatching messages to a remote device such as a smart phone of a user. The messages caused to be dispatched responsive to operation of the control circuitry may be indicative of an alarm condition that can be output on the display of the user's device to advise that a potentially dangerous condition exists. Alternatively and/or in addition, the control circuitry may be operative to communicate messages to a central controller or alarm panel located in the facility or institution in which the microwave is operated. For example the circuitry may be operative to provide wireless communication to an alarm panel or central monitoring station which receives the information that there is a potentially dangerous condition at the microwave device located in a particular location, dormitory room or other identified area of the building or facility. In still other exemplary arrangements, messages corresponding to alarm conditions that are cause to be sent by the control circuitry of exemplary arrangements may be dispatched to devices or alarm monitoring stations of a security force for an oversight authority within the area in

which the microwave is operated. Of course it should be understood that these approaches are exemplary and in other arrangements, other approaches may be used.

[0088] Exemplary arrangements may also include the features described in US Patent Application Serial No. 15/239,378 filed August 17, 2016 which is published as US Patent Publications 2017-0059233 the disclosure of which is incorporated herein by reference in its entirety. In some exemplary arrangements an appliance like that shown in the incorporated disclosure may include a safe which is suitable for holding valuables or a user's rechargeable devices such as a smart phone. In some exemplary arrangements the safe may include a smoke sensor, heat sensor, flame sensor or other type sensor that is operative to detect a fire or other dangerous condition within the interior area of the safe. Further in exemplary arrangements the at least one control circuit or other circuitry may be operative to dispatch messages to a user's smart phone or other remote computer device to indicate such a fire or other dangerous condition within the interior area of the safe. In addition in exemplary arrangements the at least one control circuit or safe circuitry as described in the incorporated disclosure, may operate an audible alarm to give at least one audible signal of the dangerous condition. Also in exemplary arrangements messages may be dispatched to alarm monitoring stations associated with the building or institution in which the appliance is located. Further in exemplary arrangements a remote notification to a user's mobile device or other computer and/or to an alarm monitoring station may also be given in circumstances in which at least one tamper sensor of one of the types of the incorporated disclosure is operative to sense a safe tamper condition. In such circumstances the at least one safe circuit or other circuitry may be operative to cause a remote notification of the tamper condition to be given and/or an audible signal to be output from an audible alarm. Further in exemplary arrangements one or more cameras may be in operative connection with the control circuitry to provide to the user's mobile device or other remote computer and/or to an alarm monitoring station, images associated with the detected condition. These may include images captured by cameras with a field of view outside the safe or the microwave oven or refrigerator of the combined appliance. Alternatively or additionally in other arrangements

cameras may be positioned to capture images of an interior area of the safe. In some arrangements this may include a camera that is operative to have a field of view directed at or through the safe opening so that in the event that the safe is opened by an unauthorized person, images of the individual who is responsible for breaking into the safe may be captured. Further in exemplary arrangements the signals may be provided by the safe circuitry which can operate on a battery if the safe is disconnected from the combined appliance and no longer receives power from the at least one power control circuit thereof. Further the safe circuit may also provide GPS or other position signals so that the location of the safe can be tracked. Of course it should be understood that these approaches are exemplary and other arrangements other approaches may be used.

[0089] The exemplary detection circuitry of the smoke sensor, infrared sensor 326, light sensor 334, or optical motion sensor 336, may be reset automatically upon the sensor not detecting gas or other conditions that are no longer indicative of the dangerous condition. Alternatively or in addition, the sensor may be reset upon circuitry sensing opening of the microwave door 9 of the microwave oven 2. The display may display a "bar" or other suitable icon to indicate that the sensor is turned on. Other types of suitable safety sensors and circuitry may also be used to detect dangerous conditions. Further in other exemplary arrangements, other circuitry may be in operative connection with the combined appliance or separate components so as to address dangerous conditions. Such items may include, for example, a suitable fire extinguishing system that may be automatically triggered in response to detecting conditions corresponding to fire or smoke within the cooking chamber of the microwave oven. For example in some exemplary arrangements, a compressed supply of carbon dioxide may be included with or be positioned adjacent to the combined appliance. A suitable gas conduit and control valve may be positioned to deliver the carbon dioxide into the cooking chamber of the microwave oven responsive to the detection of flame, excessive temperature or smoke within the microwave cooking chamber. Suitable circuitry in operative connection with the controller or circuitry of the temperature, smoke or flame detection devices may

operate to cause the control valve for the delivery of the carbon dioxide or other fire extinguishing material to be opened to cause the delivery thereof responsive at least in part to the detection of one or more of the alarm conditions. Further as can be appreciated, in some exemplary arrangements, the control circuitry may operate in accordance with its programmed instructions to require that the alarm condition be detected as existing for a programmed period of time before the control circuitry operates to cause the fire extinguishing material to be delivered into the cooking chamber. Further although exemplary arrangements may include carbon dioxide as the fire extinguishing material, in other embodiments other types of fire extinguishing or fire suppressing materials may be utilized. These may include, for example, chemical fire extinguishing or retarding materials in the form of powders or foams. Alternatively, and/or in addition, fire suppressing materials may include the delivery of nonflammable gaseous material. Of course these approaches are exemplary and in other embodiments, other approaches may be used.

[0090] As shown in Figures 15, 16 and 27, the exemplary front control panel 22 of the microwave oven 2 may include Universal Serial Bus (USB) ports 232, 234 for connection, communication, and power supply between the front control panel 22 and electronic devices such as a personal computer, cell phone, Smart Phone, Ipod®, Ipad®, or other suitable device to allow communication and/or charging of the electronic device plugged into the USB ports. In one exemplary arrangement, a first USB port 232 may be provided on the upper portion 236 of the front control panel 22, and a second USB port 234 may be provided on the lower portion 238 of the front control panel 22 above the auxiliary outlets 111, 112 and between the reset buttons 113, 114 as seen in Figure 15. The first USB port 232 may be operatively connected to a three ampere fuse and a linear time-variant system (LVT) of 100 mA, 120 volts, and 12 watts. The second USB port 234 may be operatively connected to a linear time-variant system (LVT) of 200 mA, 120 volts, and 24 watts. The second USB port 234 may also be reset. The current sensor 118 may be constructed to limit the second USB port and the two auxiliary outlets to 12 amps. The USB ports 232, 234 may be in operative connection with respective printed circuit boards. Alternatively, as

represented in Figure 27, instead of auxiliary outlet 111, another USB port 237 may be provided on the front panel 22 at the location of the auxiliary outlet 111. Alternatively or in addition, one or more USB ports may be provided on the rear of the microwave oven, the sides of the microwave oven, and/or the top or bottom of the microwave oven. Alternatively or in addition, one or more auxiliary outlets may be provided on the rear of the microwave oven, the sides of the microwave oven, and/or the top or bottom of the microwave oven. Alternatively, the refrigerator outlet may be provided on the top, bottom, or one of the sides of the microwave oven.

[0091] Figures 17 and 18 show another exemplary arrangement of a control panel and control circuitry that includes USB ports 232, 234. In this arrangement, the first and second USB ports 232, 234 are located side by side on the lower portion 238 of the front control panel 22 above the auxiliary outlets 111, 112. The USB ports 232, 234 are also located rightwardly (as viewed in Figure 17) adjacent a status LED indicator and reset button 240. In this exemplary arrangement, current sensor 218 is configured to monitor the combined current in the USB ports 232, 234 and the auxiliary outlets 111 and 112. The current sensor 218 is constructed to limit the combined current in the USB ports and auxiliary outlets 111 and 112, to 12 amperes. The LED indicator and reset button 240 may be controlled to illuminate when power to the auxiliary outlets 111, 112 and the USB ports 232, 234 is available and flash when disabled. In another arrangement, the LED indicator and reset button 240 may be controlled to be off when power to the auxiliary outlets 111, 112 and the USB ports 232, 234 is available and light on illuminate or flash when disabled. In an exemplary arrangement, depressing the LED indicator and reset button 240 enables power delivery from the auxiliary outlets 111, 112 and the USB ports 232, 234 so that power may be again supplied from them after a power interruption due to excessive power draw, when the combined current draw falls from above to below the limit. Of course it should also be understood that in exemplary arrangements, the controller or other control circuitry that operates to avoid excessive power draw may also operate to discontinue delivery of power from the receptacles and the USB ports in circumstances where the power draw of the microwave cooking element and/or the

refrigerator compressor requires the power delivery from the auxiliary outlets and USB ports be discontinued. In such exemplary arrangements, the control circuitry may operate to automatically resume the delivery of power to such receptacles and ports or in other embodiments a manual input may be required to cause the delivery of power to be reinstituted. Of course it should be understood that these approaches are exemplary and in other arrangements other approaches may be used.

[0092] Figures 19 and 20 show an alternative arrangement in which one USB port 234 is located above the auxiliary outlets 111, 112 and rightwardly adjacent the status LED indicator and reset button 240. In this exemplary arrangement, the current sensor 218 is configured to monitor the combined current draw from the USB port 234 and auxiliary outlets 111 and 112. The current sensor 218 is configured to limit the combined current draw from the USB port 234 and auxiliary outlets 111 and 112, to 12 amperes. Alternatively, the current sensor 218 may be configured to limit the combined current in the USB port 234 and the auxiliary outlets 111 and 112 to 13 amperes. The LED indicator and reset button 240 may be controlled to illuminate when power to the auxiliary outlets 111, 112 and the USB port 234 is available, and flash when the control circuitry causes the outlets and ports to be disabled. In another exemplary arrangement, the LED indicator and reset button 240 may be off when power to the auxiliary outlets 111, 112 and the USB port 234 is available, and illuminate or flash when disabled. In an exemplary arrangement, depressing the LED indicator and reset button 240 enables operation of the auxiliary outlets 111, 112 and the USB port 234 so that power may be again supplied from them after the controller discontinues the supply of power thereto when the combined current draw falls from above to below the limit. Of course as is the case with the previously described arrangement, the controller and other circuitry may be operative to also discontinue the supply of electrical power to the auxiliary receptacles and/or USB ports when power draw is required for the magnetron of the microwave or the refrigerator compressor is sensed that power delivery to other devices needs to be discontinued to limit excessive power draw. In such circumstances, the discontinuance of power to the auxiliary receptacles and USB ports may be automatically reinstated responsive to

operation of the controller. Alternatively, in other arrangements, manual inputs may be required from a user to reinstitute the electrical delivery therefrom. Further in some exemplary arrangements, the controller may be configured so as to require manual inputs to reinstate electrical delivery only under circumstances where excessive power draw above the limits from the one or more auxiliary outlets or USB ports has occurred, thus requiring a manual input to reinstitute the electrical power delivery therefrom. Of course these approaches are exemplary and in other arrangements other approaches may be used. Other elements of the arrangements of Figures 17-20 may be similar in structure and function as the arrangements shown in Figures 1-11. Thus, the same reference numbers are used in describing these exemplary arrangements to indicate elements that are similar to elements or components in the arrangements shown in Figures 1-11.

[0093] Figure 21 shows the rear portion 244 of the exemplary microwave oven of the arrangements shown in Figures 12-20. Refrigerator outlet 15 is shown on and accessible from the rear portion 244 of the microwave oven and is associated with the LED indicator and reset button 214, which is also provided on the rear portion 244 of the microwave oven. Figure 22 is a similar view as Figure 21 except that an AC electrical cord 8 for the microwave oven is shown.

[0094] In the arrangements shown in Figures 12-22, control models for control logic may be established for execution of executable instructions by the controller or microprocessor which is also referred to herein as at least one electrical power control circuit 4. These models can be in the form of processor executable instructions stored in a computer readable medium, such as software or firmware within the control circuit 104. The exemplary models and logic flow are, in the first instance, dependent on the state of operation of the microwave oven 2. The current demands of the microwave oven 2 are generally the most significant contribution to overload. To avoid overload conditions, in exemplary arrangements power to the low power receptacles or auxiliary outlets, refrigerator receptacle, and/or USB ports is disabled during microwave operation.

[0095] Figure 23 shows a flow chart illustrating several control models for operational scenarios. The at least one power control circuit 104 begins by determining whether the microwave oven is turned on or operating (e.g. cooking) in step 246. When the microwave oven is turned on and operating to perform cooking, the rear refrigerator outlet 15, the two auxiliary outlets 111, 112 on the front control panel 22, and the two USB ports 232, 234 on the front control panel are all turned off or disabled, so that the total draw of current for the combination microwave and refrigerator is not over 15 amperes as indicated in step 248.

[0096] When the microwave oven is not drawing cooking power and items are plugged into the two USB ports 232, 234, two auxiliary outlets 111, 112, and rear refrigerator outlet 15, then the exemplary at least one control circuit 104 determines whether the refrigerator outlet 15 is drawing less than 2 amperes (approximately the average amperes when the refrigerator compressor is running) in step 250. If the refrigerator outlet 15 is drawing less than 2 amperes, then all the outlets 15, 111, 112 and USB ports 232, 234 are caused to be enabled, so that power may be supplied through them as indicated in step 252. If the refrigerator outlet 15 not drawing less than 2 amperes, the at least one control circuit 104 determines whether the refrigerator outlet 15 is drawing less than 14 amperes in step 254. If the refrigerator outlet 15 is drawing less than 14 amperes but not less than or greater than or equal to 2 amperes, then the auxiliary outlets 111, 112 and USB ports 232, 234 are disabled or turned off so that no power may be supplied from them as indicated in step 256. The refrigerator outlet 15 remains enabled. If the refrigerator outlet 15 is not drawing less than 14 amperes or drawing greater than or equal to 14 amperes, then the refrigerator outlet 15 is disabled in step 258. This may be accomplished by tripping the relay 20 of the reset circuit off. In addition, the red LED light on the LED indicator and reset button 214 is turned on to identify the disabled condition of the refrigerator. Then, in step 260, the auxiliary outlets 111, 112 and USB ports 232, 234 are enabled so that power may be supplied through them.

[0097] Then, the exemplary at least one control circuit determines whether the refrigerator outlet 15 is drawing less than 14 amperes in step 262. If the refrigerator outlet 15 is not drawing less than 14 amperes or drawing greater than or equal to 14 amperes, then the refrigerator outlet 15 remains disabled and the red LED light on the LED indicator and reset button 214 remains turned on to identify the disabled condition of the refrigerator 3. This condition may occur, for example, if an electrical heater is plugged into what is normally used as the refrigerator electrical supply outlet 15. When the refrigerator outlet 15 draws less than 14 amperes resulting from the overload condition being eliminated, the refrigerator outlet 15 will be enabled by the control circuit so that power may supplied to the refrigerator outlet 15 upon the LED indicator and reset button 214 being depressed as indicated in step 264. Depression of the LED indicator and reset button 214 in this condition will also turn off the red LED light. The process then ends. It should be noted that the at least one control circuit 104 can make the determination in steps at the same time or in a different order.

[0098] It should be understood that in exemplary arrangements, determination as to the power draw from receptacles that have been disabled, may be determined through a process of again supplying power output through the receptacle. The power draw from the receptacle is monitored continuously after the power is restored and if it is detected that the power draw exceeds a threshold or other determined amount, power is discontinued to the receptacle. In some exemplary arrangements, the power sensing circuitry may operate in conjunction with the controller to calculate the current power draw level. The control circuitry may also operate in accordance with its programming to determine that other connected devices are consuming power which may necessitate not providing power to the receptacle so as to avoid an overload condition. Alternatively or in addition, the control circuitry may be operative to monitor other conditions that may be indicative of a problem when the power is restored to a receptacle, port or other control outlet. For example, responsive to a manual input to reinstitute the supply of power thereto, the control circuitry may operate to recognize conditions that correspond to an electrical short or

other malfunction which necessitates an immediate withdrawal of electrical power thereto. This may include, for example, monitoring the rate at which power is drawn and the current flow increases to detect a short or other fault condition. Numerous different types of detection circuitry and control approaches may be implemented in order to help assure that if power output has been discontinued, that excessive power draw or undesirable conditions are not a problem when power is reinstated.

[0099] Although exemplary arrangements are described herein as used in conjunction with vapor compression refrigerators, embodiments employing the principles described herein may also be used with other types of refrigerators. Such refrigerators may include refrigerators that use thermoelectric cooling, such as Peltier elements to provide cooling. Other arrangements may include absorption refrigerators to provide cooling. In such arrangements the components of the refrigerator apparatus which draw electrical power, are controlled through operation of at least one power control circuit, to prevent, suspend or defer the operation thereof at times when the microwave radiation emitting cooking element of other components that draw electrical power are to be operated, so as to avoid exceeding a maximum threshold for current draw for the combined appliance that is permitted by the at least one control circuit.

[00100] It should be understood that the above description is only illustrative of the exemplary arrangements. Various alternatives and modifications can be devised by those skilled in the art without departing from the teachings of exemplary arrangements. Accordingly, the present application is intended to embrace all such alternatives, modifications and variances which fall with the scope of the appended claims.

[00101] Thus the exemplary systems, arrangements, and methods of operation that have been described herein achieve desirable capabilities, eliminate difficulties encountered in the use of prior devices and systems and attain the useful results described herein.

[00102] In the foregoing description, certain terms have been used in describing exemplary arrangements for purposes of brevity, clarity and understanding. However, no unnecessary limitations are to be implied therefrom because such terms are used for descriptive purposes and are intended to be broadly construed. Moreover, the descriptions and illustrations herein are by way of examples and the inventive features are not limited to the particular features shown and described.

[00103] Further it should be understood that elements, features, relationships, devices and other aspects described in connection with one exemplary arrangement may be utilized in connection with other exemplary arrangements such that numerous different arrangements, functions and capabilities may be carried out. Numerous different aspects of described arrangements may be used together or in different combinations to achieve useful results.

[00104] Having described the features, discoveries and principles of the exemplary arrangements, the manner in which they are constructed and operated, and the advantages and useful results attained, the new and useful structures, devices, elements, arrangements, parts, combinations, systems, equipment, operations, methods, processes and relationships are set forth in the appended claims.

CLAIMS

We claim:

1. Apparatus comprising:

a microwave oven, wherein the microwave oven includes

a magnetron, wherein the magnetron is configured to cook items in a cooking area within the microwave oven,

a smoke sensor, wherein the smoke sensor is positioned in operative connection with the cooking area,

a power cord, wherein the power cord is configured to be releasably connected to a source of electrical power,

at least one externally accessible electrical connector, wherein each electrical connector is configured to deliver electrical power that is received through the power cord through the respective electrical connector to a respective electrically powered device that is outside of the microwave oven,

at least one power control circuit, wherein the at least one power control circuit is in operative electrical connection with each of the power cord, the at least one electrical connector, the magnetron, and the smoke sensor,

wherein responsive at least in part to a level of smoke sensed by the smoke sensor, the at least one power control circuit is operative to cause cooking power

to the magnetron to be withdrawn to end a current cooking session prior to a set end time of the current cooking session,

wherein after the current cooking session has been caused to end prior to the set end time based on the sensed level of smoke, the at least one power control circuit is operative thereafter to enable the magnetron to receive cooking power in a next subsequent cooking session.

2. The apparatus according to claim 1

wherein the at least one power control circuit is operative to cause electrical power to be unavailable to the at least one electrical connector during at least a portion of the time that the magnetron is operative.

3. The apparatus according to claim 1

wherein the at least one electrical connector comprises an electric outlet configured to releasably receive a plug in electrical connection therewith,

wherein the at least one power control circuit is operative to cause electrical power to be unavailable to the electric outlet during at least a portion of the time that the magnetron is operative.

4. The apparatus according to claim 1

wherein the at least one electrical connector includes a USB port,

wherein the at least one power control circuit is operative to cause electrical power to be unavailable to the USB port during at least a portion of the time that the magnetron is operative.

5. The apparatus according to claim 1

wherein the smoke sensor is includes at least one of

a radiation emitter and radiation receiver,

a photosensor,

a motion sensor,

an ionization sensor, and

a VOC sensor.

6. The apparatus according to claim 1

wherein the at least one electrical connector comprises an electric outlet configured to releasably receive a plug of a refrigerator in electrical connection therewith,

wherein the at least one power control circuit is operative to cause electrical power to be unavailable to the electric outlet during at least a portion of the time that the magnetron is operative.

7. The apparatus according to claim 1

wherein the power cord comprises a single power cord,

wherein the at least one electrical connector includes

an electric outlet, and

a USB port.

8. The apparatus according to claim 1

wherein the power cord comprises a single power cord,

wherein the at least one electrical connector includes

an electric outlet, and

a USB port,

wherein the at least one power control circuit is operative to cause electrical power to be unavailable to the electric outlet and the USB port during at least a portion of the time that the magnetron is operative.

9. The apparatus according to claim 1

wherein the at least one power control circuit is operative to cause electrical power to be unavailable to the at least one electrical connector during at least a portion of the time that the magnetron is operative, and for a predetermined time period after electrical power becomes unavailable to the at least one electrical connector.

10. The apparatus according to claim 1

wherein the at least one power control circuit is operative to cause cooking power to the magnetron to be withdrawn to end the cooking session responsive at least in part to sensing the level of smoke continuously for a predetermined time.

11. The apparatus according to claim 1

wherein the microwave oven includes a front side and a back side,

wherein the front side includes a control panel, an opening and a movable door, wherein in an open position of the door the cooking area is accessible from outside the microwave oven,

wherein the power cord comprises a single power cord,

wherein the at least one electrical connector includes

an electric outlet on the back side.

12. The apparatus according to claim 1

wherein the microwave oven includes a front side in a back side,

wherein the front side includes a control panel, an opening and a movable door, wherein in an open position of the door the cooking area is accessible from outside the microwave oven,

wherein the power cord comprises a single power cord,

wherein the at least one electrical connector includes

an electric outlet on the back side, and

a USB port on the front side,

wherein the at least one power control circuit is operative to cause electrical power to be unavailable to the electric outlet and the USB port during at least a portion of the time that the magnetron is operative.

13. The apparatus according to claim 1

and further comprising:

a refrigerator, wherein the refrigerator is electrically connected to the at least one externally accessible electrical connector,

wherein the at least one power control circuit is operative to cause electrical power to be unavailable to the refrigerator during at least a portion of the time that the magnetron is operative.

14. Apparatus comprising:

a microwave oven, wherein the microwave oven includes

a cooking area within the microwave oven,

a magnetron, wherein the magnetron is configured to cook items in the cooking area,

at least one smoke sensor, wherein the smoke sensor is positioned in operative connection with the cooking area,

at least one externally accessible electrical connector, wherein each electrical connector is configured to deliver electrical power therefrom,

at least one power control circuit, wherein the at least one power control circuit is in operative electrical connection with the magnetron, the at least one smoke sensor, and the at least one electrical connector,

wherein responsive at least in part to a level of smoke sensed by the at least one smoke sensor during a cooking session, the at least one power control circuit is operative to cause power to the magnetron to be withdrawn to end the cooking session prior to a set end time,

wherein after the cooking session has been caused the end based on the sensed level of smoke, the at least one power control circuit is operative thereafter to enable the magnetron to receive power to commence a next subsequent cooking session.

15. The apparatus according to claim 14

wherein the at least one power control circuit is operative to cause power to be unavailable to the at least one electrical connector when cooking power is delivered to the magnetron.

16. The apparatus according to claim 14

wherein the at least one electrical connector comprises an electric outlet configured to deliver household current and to releasably receive a a plug in electrical connection therewith.

17. The apparatus according to claim 14

wherein the at least one electrical connector comprises a USB port.

18. The apparatus according to claim 14

wherein the at least one electrical connector comprises

an electric outlet configured to deliver household current, and

a USB port,

wherein the at least one power control circuit is operative to cause electrical power to not be deliverable from each of the electric socket and the USB port when cooking power is delivered to the magnetron.

19. The apparatus according to claim 14

and further comprising:

a refrigerator, wherein the refrigerator is in operative electrical connection with the at least one electrical connector.

20. Apparatus comprising:

a microwave oven, wherein the microwave oven includes

a cooking area within the microwave oven,

a magnetron, wherein the magnetron is configured to cook items positioned in the cooking area,

at least one smoke sensor, wherein the at least one smoke sensor is positioned in operative connection with the cooking area,

at least one power control circuit, wherein the at least one power control circuit is in operative connection with each of the magnetron and the at least one smoke sensor,

wherein the at least one power control circuit is operative to cause

responsive at least in part to a level of smoke sensed by the at least one smoke sensor, cooking power being currently delivered to the magnetron to be withdrawn whereby a current cooking session is ended prior to a set end time, and

after the current cooking session has been caused to end prior to the set end time based on the sensed level of smoke, cooking power to be delivered to the magnetron to commence a next subsequent cooking session.

21. The apparatus according to claim 20

wherein the microwave oven further comprises

at least one externally accessible electrical connector, wherein each electrical connector is configured to deliver electrical power through the respective electrical connector,

wherein the at least one electrical connector is in operative connection with the at least one power control circuit,

wherein the at least one power control circuit is operative to cause electrical power to be unavailable to the at least one electrical connector when cooking power is being delivered to the magnetron.

ABSTRACT

A combination microwave and refrigerator system is provided. The microwave oven is connected to a source of power and has a control circuit for controlling the operation of the microwave oven. A first power supply outlet is provided on the microwave oven. A refrigerator is connected to the source of power by connection to the first power supply outlet. The control circuit is configured to disable the cooling operation of the refrigerator, when the microwave oven demands cooking power, and enable the cooling operation of the refrigerator when the microwave oven is not drawing cooking power. A safety sensor is provided in the microwave oven, and is configured to cause cooking power to the microwave oven to be turned off upon the safety sensor sensing a level of smoke.

PATENT APPLICATION FEE DETERMINATION RECORD

Substitute for Form PTO-875

Application or Docket Number
17/691,628

APPLICATION AS FILED - PART I

FOR	(Column 1) NUMBER FILED	(Column 2) NUMBER EXTRA	SMALL ENTITY RATE($)	SMALL ENTITY FEE($)	OR	OTHER THAN SMALL ENTITY RATE($)	OTHER THAN SMALL ENTITY FEE($)
BASIC FEE (37 CFR 1.16(a), (b), or (c))	N/A	N/A	N/A	80		N/A	
SEARCH FEE (37 CFR 1.16(k), (i), or (m))	N/A	N/A	N/A	350		N/A	
EXAMINATION FEE (37 CFR 1.16(o), (p), or (q))	N/A	N/A	N/A	400		N/A	
TOTAL CLAIMS (37 CFR 1.16(i))	21 minus 20 =	* 1	x 50 =	50	OR		
INDEPENDENT CLAIMS (37 CFR 1.16(h))	3 minus 3 =	*	x 240 =	0.00			
APPLICATION SIZE FEE (37 CFR 1.16(s))	If the specification and drawings exceed 100 sheets of paper, the application size fee due is $310 ($155 for small entity) for each additional 50 sheets or fraction thereof. See 35 U.S.C. 41(a)(1)(G) and 37 CFR 1.16(s).			0.00			
MULTIPLE DEPENDENT CLAIM PRESENT (37 CFR 1.16(j))				0.00			
* If the difference in column 1 is less than zero, enter "0" in column 2.			TOTAL	880		TOTAL	

APPLICATION AS AMENDED - PART II

		(Column 1) CLAIMS REMAINING AFTER AMENDMENT		(Column 2) HIGHEST NUMBER PREVIOUSLY PAID FOR	(Column 3) PRESENT EXTRA	SMALL ENTITY RATE($)	SMALL ENTITY ADDITIONAL FEE($)	OR	OTHER THAN SMALL ENTITY RATE($)	OTHER THAN SMALL ENTITY ADDITIONAL FEE($)
AMENDMENT A	Total (37 CFR 1.16(i))	*	Minus	**	=	x =		OR	x =	
AMENDMENT A	Independent (37 CFR 1.16(h))	*	Minus	***	=	x =		OR	x =	
AMENDMENT A	Application Size Fee (37 CFR 1.16(s))									
AMENDMENT A	FIRST PRESENTATION OF MULTIPLE DEPENDENT CLAIM (37 CFR 1.16(j))							OR		
						TOTAL ADD'L FEE		OR	TOTAL ADD'L FEE	

		(Column 1) CLAIMS REMAINING AFTER AMENDMENT		(Column 2) HIGHEST NUMBER PREVIOUSLY PAID FOR	(Column 3) PRESENT EXTRA	RATE($)	ADDITIONAL FEE($)	OR	RATE($)	ADDITIONAL FEE($)
AMENDMENT B	Total (37 CFR 1.16(i))	*	Minus	**	=	x =		OR	x =	
AMENDMENT B	Independent (37 CFR 1.16(h))	*	Minus	***	=	x =		OR	x =	
AMENDMENT B	Application Size Fee (37 CFR 1.16(s))									
AMENDMENT B	FIRST PRESENTATION OF MULTIPLE DEPENDENT CLAIM (37 CFR 1.16(j))							OR		
						TOTAL ADD'L FEE		OR	TOTAL ADD'L FEE	

* If the entry in column 1 is less than the entry in column 2, write "0" in column 3.
** If the "Highest Number Previously Paid For" IN THIS SPACE is less than 20, enter "20".
*** If the "Highest Number Previously Paid For" IN THIS SPACE is less than 3, enter "3".
The "Highest Number Previously Paid For" (Total or Independent) is the highest found in the appropriate box in column 1.

UNITED STATES PATENT AND TRADEMARK OFFICE

UNITED STATES DEPARTMENT OF COMMERCE
United States Patent and Trademark Office
Address: COMMISSIONER FOR PATENTS
P.O. Box 1450
Alexandria, Virginia 22313-1450
www.uspto.gov

APPLICATION NUMBER	FILING or 371(c) DATE	GRP ART UNIT	FIL FEE REC'D	ATTY.DOCKET.NO	TOT CLAIMS	IND CLAIMS
17/691,628	03/10/2022	3761	880	INT-1001 CIP 2 C 4	21	3

CONFIRMATION NO. 4539

FILING RECEIPT

OC000000132308160

7733
WALKER & JOCKE
231 SOUTH BROADWAY STREET
MEDINA, OH 44256

Date Mailed: 03/16/2022

Receipt is acknowledged of this non-provisional utility patent application. The application will be taken up for examination in due course. Applicant will be notified as to the results of the examination. Any correspondence concerning the application must include the following identification information: the U.S. APPLICATION NUMBER, FILING DATE, NAME OF FIRST INVENTOR, and TITLE OF INVENTION. Fees transmitted by check or draft are subject to collection.

Please verify the accuracy of the data presented on this receipt. If an error is noted on this Filing Receipt, please submit a written request for a corrected Filing Receipt, including a properly marked-up ADS showing the changes with strike-through for deletions and underlining for additions. If you received a "Notice to File Missing Parts" or other Notice requiring a response for this application, please submit any request for correction to this Filing Receipt with your reply to the Notice. When the USPTO processes the reply to the Notice, the USPTO will generate another Filing Receipt incorporating the requested corrections provided that the request is grantable.

Inventor(s)

Gregory Allan Thomas Hall, Guelph, CANADA;
Philip Emma, Topsfield, MA;
Jim Estill, Guelph, CANADA;
Bryan Stuart Cunningham, Kitchener, CANADA;
Dennis O'Brien, Guelph, CANADA;

Applicant(s)

Intirion Corporation, Walpole, MA;

Power of Attorney: The patent practitioners associated with Customer Number 07733

Domestic Priority data as claimed by applicant

This application is a CON of 16/671,383 11/01/2019 PAT 11274876
which is a CIP of 15/600,118 05/19/2017 PAT 10495374
which is a CON of 15/135,883 04/22/2016 PAT 9664436
which is a CIP of 14/262,290 04/25/2014 PAT 9657974
which is a CIP of 12/317,632 12/23/2008 PAT 8742304
which claims benefit of 61/009,419 12/28/2007
and said 16/671,383 11/01/2019
is a CIP of 15/239,378 08/17/2016 ABN
which claims benefit of 62/211,765 08/29/2015
and claims benefit of 62/262,954 12/04/2015

Foreign Applications for which priority is claimed (You may be eligible to benefit from the **Patent Prosecution Highway** program at the USPTO. Please see http://www.uspto.gov for more information.) - None.
Foreign application information must be provided in an Application Data Sheet in order to constitute a claim to foreign priority. See 37 CFR 1.55 and 1.76.

Permission to Access Application via Priority Document Exchange: Yes

Permission to Access Search Results: Yes

Applicant may provide or rescind an authorization for access using Form PTO/SB/39 or Form PTO/SB/69 as appropriate.

If Required, Foreign Filing License Granted: 03/16/2022

The country code and number of your priority application, to be used for filing abroad under the Paris Convention, is **US 17/691,628**

Projected Publication Date: 06/23/2022

Non-Publication Request: No

Early Publication Request: No
**** SMALL ENTITY ****
Title

MULTIPLE LINKED APPLIANCE WITH AUXILIARY OUTLET

Preliminary Class

219

Statement under 37 CFR 1.55 or 1.78 for AIA (First Inventor to File) Transition Applications: Yes

PROTECTING YOUR INVENTION OUTSIDE THE UNITED STATES

Since the rights granted by a U.S. patent extend only throughout the territory of the United States and have no effect in a foreign country, an inventor who wishes patent protection in another country must apply for a patent in a specific country or in regional patent offices. Applicants may wish to consider the filing of an international application under the Patent Cooperation Treaty (PCT). An international (PCT) application generally has the same effect as a regular national patent application in each PCT-member country. The PCT process **simplifies** the filing of patent applications on the same invention in member countries, but **does not result** in a grant of "an international patent" and does not eliminate the need of applicants to file additional documents and fees in countries where patent protection is desired.

Almost every country has its own patent law, and a person desiring a patent in a particular country must make an application for patent in that country in accordance with its particular laws. Since the laws of many countries differ in various respects from the patent law of the United States, applicants are advised to seek guidance from specific foreign countries to ensure that patent rights are not lost prematurely.

Applicants also are advised that in the case of inventions made in the United States, the Director of the USPTO must issue a license before applicants can apply for a patent in a foreign country. The filing of a U.S. patent application serves as a request for a foreign filing license. The application's filing receipt contains further information and guidance as to the status of applicant's license for foreign filing.

Applicants may wish to consult the USPTO booklet, "General Information Concerning Patents" (specifically, the section entitled "Treaties and Foreign Patents") for more information on timeframes and deadlines for filing foreign patent applications. The guide is available either by contacting the USPTO Contact Center at 800-786-9199, or it can be viewed on the USPTO website at http://www.uspto.gov/web/offices/pac/doc/general/index.html.

For information on preventing theft of your intellectual property (patents, trademarks and copyrights), you may wish to consult the U.S. Government website, http://www.stopfakes.gov. Part of a Department of Commerce initiative, this website includes self-help "toolkits" giving innovators guidance on how to protect intellectual property in specific countries such as China, Korea and Mexico. For questions regarding patent enforcement issues, applicants may call the U.S. Government hotline at 1-866-999-HALT (1-866-999-4258).

LICENSE FOR FOREIGN FILING UNDER

Title 35, United States Code, Section 184

Title 37, Code of Federal Regulations, 5.11 & 5.15

GRANTED

The applicant has been granted a license under 35 U.S.C. 184, if the phrase "IF REQUIRED, FOREIGN FILING LICENSE GRANTED" followed by a date appears on this form. Such licenses are issued in all applications where the conditions for issuance of a license have been met, regardless of whether or not a license may be required as set forth in 37 CFR 5.15. The scope and limitations of this license are set forth in 37 CFR 5.15(a) unless an earlier license has been issued under 37 CFR 5.15(b). The license is subject to revocation upon written notification. The date indicated is the effective date of the license, unless an earlier license of similar scope has been granted under 37 CFR 5.13 or 5.14.

This license is to be retained by the licensee and may be used at any time on or after the effective date thereof unless it is revoked. This license is automatically transferred to any related applications(s) filed under 37 CFR 1.53(d). This license is not retroactive.

The grant of a license does not in any way lessen the responsibility of a licensee for the security of the subject matter as imposed by any Government contract or the provisions of existing laws relating to espionage and the national security or the export of technical data. Licensees should apprise themselves of current regulations especially with respect to certain countries, of other agencies, particularly the Office of Defense Trade Controls, Department of State (with respect to Arms, Munitions and Implements of War (22 CFR 121-128)); the Bureau of Industry and Security, Department of Commerce (15 CFR parts 730-774); the Office of Foreign AssetsControl, Department of Treasury (31 CFR Parts 500+) and the Department of Energy.

NOT GRANTED

No license under 35 U.S.C. 184 has been granted at this time, if the phrase "IF REQUIRED, FOREIGN FILING LICENSE GRANTED" DOES NOT appear on this form. Applicant may still petition for a license under 37 CFR 5.12, if a license is desired before the expiration of 6 months from the filing date of the application. If 6 months has lapsed from the filing date of this application and the licensee has not received any indication of a secrecy order under 35 U.S.C. 181, the licensee may foreign file the application pursuant to 37 CFR 5.15(b).

SelectUSA

The United States represents the largest, most dynamic marketplace in the world and is an unparalleled location for business investment, innovation, and commercialization of new technologies. The U.S. offers tremendous resources and advantages for those who invest and manufacture goods here. Through SelectUSA, our nation works to promote and facilitate business investment. SelectUSA provides information assistance to the international investor community; serves as an ombudsman for existing and potential investors; advocates on behalf of U.S. cities, states, and regions competing for global investment; and counsels U.S. economic development organizations on investment attraction best practices. To learn more about why the United States is the best country in the world to develop technology, manufacture products, deliver services, and grow your business, visit http://www.SelectUSA.gov or call +1-202-482-6800.

IN THE UNITED STATES PATENT AND TRADEMARK OFFICE

First Named Inventor:	)	
Gregory Allan Thomas Hall	)	
	)	**Art Unit 3761**
Serial No.: 17/691,628	)	
	)	**Primary Examiner**
	)	**Hung D. Nguyen**
Filed: March 10, 2022	)	
	)	
	)	
Conf. 4539	)	

Title: Multiple Linked Appliance With Auxiliary Outlet

Commissioner for Patents
P.O. Box 1450
Alexandria, VA 22313-1450

Preliminary Amendment

Sir:

Kindly amend the above-identified Application prior to examination as follows:

Amendments to the claims begin on page 2 hereof.

Remarks begin on page 12.

In the claims

Kindly amend the claims as follows:

1. (original) Apparatus comprising:

a microwave oven, wherein the microwave oven includes

a magnetron, wherein the magnetron is configured to cook items in a cooking area within the microwave oven,

a smoke sensor, wherein the smoke sensor is positioned in operative connection with the cooking area,

a power cord, wherein the power cord is configured to be releasably connected to a source of electrical power,

at least one externally accessible electrical connector, wherein each electrical connector is configured to deliver electrical power that is received through the power cord through the respective electrical connector to a respective electrically powered device that is outside of the microwave oven,

at least one power control circuit, wherein the at least one power control circuit is in operative electrical connection with each of the power cord, the at least one electrical connector, the magnetron, and the smoke sensor,

wherein responsive at least in part to a level of smoke sensed by the smoke sensor, the at least one power control circuit is operative to cause cooking power

to the magnetron to be withdrawn to end a current cooking session prior to a set end time of the current cooking session,

wherein after the current cooking session has been caused to end prior to the set end time based on the sensed level of smoke, the at least one power control circuit is operative thereafter to enable the magnetron to receive cooking power in a next subsequent cooking session.

2. (original) The apparatus according to claim 1

wherein the at least one power control circuit is operative to cause electrical power to be unavailable to the at least one electrical connector during at least a portion of the time that the magnetron is operative.

3. (original) The apparatus according to claim 1

wherein the at least one electrical connector comprises an electric outlet configured to releasably receive a plug in electrical connection therewith,

wherein the at least one power control circuit is operative to cause electrical power to be unavailable to the electric outlet during at least a portion of the time that the magnetron is operative.

4. (original) The apparatus according to claim 1

wherein the at least one electrical connector includes a USB port,

wherein the at least one power control circuit is operative to cause electrical power to be unavailable to the USB port during at least a portion of the time that the magnetron is operative.

5. (currently amended) The apparatus according to claim 1

wherein the smoke sensor ~~is~~ includes at least one of

a radiation emitter and radiation receiver,

a photosensor,

a motion sensor,

an ionization sensor, and

a VOC sensor.

6. (original) The apparatus according to claim 1

wherein the at least one electrical connector comprises an electric outlet configured to releasably receive a plug of a refrigerator in electrical connection therewith,

wherein the at least one power control circuit is operative to cause electrical power to be unavailable to the electric outlet during at least a portion of the time that the magnetron is operative.

7. (original) The apparatus according to claim 1

wherein the power cord comprises a single power cord,

wherein the at least one electrical connector includes

an electric outlet, and

a USB port.

8. (original) The apparatus according to claim 1

wherein the power cord comprises a single power cord,

wherein the at least one electrical connector includes

an electric outlet, and

a USB port,

wherein the at least one power control circuit is operative to cause electrical power to be unavailable to the electric outlet and the USB port during at least a portion of the time that the magnetron is operative.

9. (original) The apparatus according to claim 1

wherein the at least one power control circuit is operative to cause electrical power to be unavailable to the at least one electrical connector during at least a portion of the time that the magnetron is operative, and for a predetermined time period after electrical power becomes unavailable to the at least one electrical connector.

10. (original) The apparatus according to claim 1

wherein the at least one power control circuit is operative to cause cooking power to the magnetron to be withdrawn to end the cooking session responsive at least in part to sensing the level of smoke continuously for a predetermined time.

11. (currently amended) The apparatus according to claim 1

wherein the microwave oven includes a front side and a back side,

wherein the front side includes a control panel, an opening and a movable door, wherein in an open position of the door, the cooking area is accessible from outside the microwave oven,

wherein the power cord comprises a single power cord,

wherein the at least one electrical connector includes

an electric outlet on the back side.

12. (original) The apparatus according to claim 1

wherein the microwave oven includes a front side in a back side,

wherein the front side includes a control panel, an opening and a movable door, wherein in an open position of the door the cooking area is accessible from outside the microwave oven,

wherein the power cord comprises a single power cord,

wherein the at least one electrical connector includes

an electric outlet on the back side, and

a USB port on the front side,

wherein the at least one power control circuit is operative to cause electrical power to be unavailable to the electric outlet and the USB port during at least a portion of the time that the magnetron is operative.

13. (original) The apparatus according to claim 1

and further comprising:

a refrigerator, wherein the refrigerator is electrically connected to the at least one externally accessible electrical connector,

wherein the at least one power control circuit is operative to cause electrical power to be unavailable to the refrigerator during at least a portion of the time that the magnetron is operative.

14. (currently amended) Apparatus comprising:

a microwave oven, wherein the microwave oven includes

a cooking area within the microwave oven,

a magnetron, wherein the magnetron is configured to cook items in the cooking area,

at least one smoke sensor, wherein the smoke sensor is positioned in operative connection with the cooking area,

at least one externally accessible electrical connector, wherein each electrical connector is configured to deliver electrical power ~~therefrom~~from the microwave oven,

at least one power control circuit, wherein the at least one power control circuit is in operative electrical connection with the magnetron, the at least one smoke sensor, and the at least one electrical connector,

wherein responsive at least in part to a level of smoke sensed by the at least one smoke sensor during a cooking session, the at least one power control circuit is operative to cause power to the magnetron to be withdrawn to end the cooking session prior to a set end time,

wherein after the cooking session has been caused the end based on the sensed level of smoke, the at least one power control circuit is operative thereafter to enable the magnetron to receive power to commence a next subsequent cooking session.

15. (currently amended) The apparatus according to claim 14

wherein the at least one power control circuit is operative to cause power to be unavailable ~~to~~from the at least one electrical connector when cooking power is delivered to the magnetron.

16. (original) The apparatus according to claim 14

wherein the at least one electrical connector comprises an electric outlet configured to deliver household current and to releasably receive a a plug in electrical connection therewith.

17. (original) The apparatus according to claim 14

wherein the at least one electrical connector comprises a USB port.

18. (original) The apparatus according to claim 14

wherein the at least one electrical connector comprises

an electric outlet configured to deliver household current, and

a USB port,

wherein the at least one power control circuit is operative to cause electrical power to not be deliverable from each of the electric socket and the USB port when cooking power is delivered to the magnetron.

19. (currently amended) The apparatus according to claim 14

and further comprising:

<u>at least one of</u>

a refrigerator, <u>and</u>

<u>a safe,</u>

wherein the at least one of the refrigerator and the safe is in operative electrical connection with the at least one ~~electrical connector~~ power control circuit.

20. (original) Apparatus comprising:

a microwave oven, wherein the microwave oven includes

a cooking area within the microwave oven,

a magnetron, wherein the magnetron is configured to cook items positioned in the cooking area,

at least one smoke sensor, wherein the at least one smoke sensor is positioned in operative connection with the cooking area,

at least one power control circuit, wherein the at least one power control circuit is in operative connection with each of the magnetron and the at least one smoke sensor,

wherein the at least one power control circuit is operative to cause

responsive at least in part to a level of smoke sensed by the at least one smoke sensor, cooking power being currently delivered to the magnetron to be withdrawn whereby a current cooking session is ended prior to a set end time, and

after the current cooking session has been caused to end prior to the set end time based on the sensed level of smoke, cooking power to be

delivered to the magnetron to commence a next subsequent cooking session.

21. (currently amended) The apparatus according to claim 20

wherein the microwave oven further comprises

at least one externally accessible electrical connector, wherein each electrical connector is configured to deliver electrical power <u>from the microwave oven</u> through the respective electrical connector,

wherein the at least one electrical connector is in operative connection with the at least one power control circuit,

wherein the at least one power control circuit is operative to cause electrical power to be unavailable ~~to~~<u>from</u> the at least one electrical connector when cooking power is being delivered to the magnetron.

REMARKS

Claim Status

Claims 5, 11, 14, 15, 19 and 21 have been amended herein. Claims 1 – 21 remain pending.

Discussion Of Claim Amendments

The amendments presented herein improve the wording of the claims. The amendments do not change the nature of the invention claimed at the time the Application was filed.

No Fees Should Be Due

It is believed that no fees will be due upon the submission of this Preliminary Amendment. However, if any fees are due authorization is hereby given to charge the fees to Deposit Account 10-0637.

Conclusion

Examination and favorable consideration of the claims is respectfully requested. The undersigned will be happy to discuss any aspect of the Application by telephone at the Office's convenience.

Respectfully submitted,

/Ralph E. Jocke/
Ralph E. Jocke, Reg. No. 31,029
Walker & Jocke Co., LPA
231 South Broadway
Medina, OH 44256
(330) 721-0000
Customer No. 07733

Electronic Acknowledgement Receipt

EFS ID:	45475744
Application Number:	17691628
International Application Number:	
Confirmation Number:	4539
Title of Invention:	MULTIPLE LINKED APPLIANCE WITH AUXILIARY OUTLET
First Named Inventor/Applicant Name:	Gregory Allan Thomas Hall
Customer Number:	7733
Filer:	Ralph E. Jocke/Allison McDermott
Filer Authorized By:	Ralph E. Jocke
Attorney Docket Number:	INT-1001 CIP 2 C 4
Receipt Date:	14-APR-2022
Filing Date:	10-MAR-2022
Time Stamp:	17:02:09
Application Type:	Utility under 35 USC 111(a)

Payment information:

Submitted with Payment	no

File Listing:

Document Number	Document Description	File Name	File Size(Bytes)/ Message Digest	Multi Part /.zip	Pages (if appl.)
1		Preliminary_Amendment.pdf	53929 0e989a88263e10541fd9e37f6f3e7f79df4bdec3	yes	13

	Multipart Description/PDF files in .zip description		
	Document Description	**Start**	**End**
	Preliminary Amendment	1	1
	Claims	2	11
	Applicant Arguments/Remarks Made in an Amendment	12	13

Warnings:	
Information:	
Total Files Size (in bytes):	53929

This Acknowledgement Receipt evidences receipt on the noted date by the USPTO of the indicated documents, characterized by the applicant, and including page counts, where applicable. It serves as evidence of receipt similar to a Post Card, as described in MPEP 503.

New Applications Under 35 U.S.C. 111
If a new application is being filed and the application includes the necessary components for a filing date (see 37 CFR 1.53(b)-(d) and MPEP 506), a Filing Receipt (37 CFR 1.54) will be issued in due course and the date shown on this Acknowledgement Receipt will establish the filing date of the application.
National Stage of an International Application under 35 U.S.C. 371
If a timely submission to enter the national stage of an international application is compliant with the conditions of 35 U.S.C. 371 and other applicable requirements a Form PCT/DO/EO/903 indicating acceptance of the application as a national stage submission under 35 U.S.C. 371 will be issued in addition to the Filing Receipt, in due course.
New International Application Filed with the USPTO as a Receiving Office
If a new international application is being filed and the international application includes the necessary components for an international filing date (see PCT Article 11 and MPEP 1810), a Notification of the International Application Number and of the International Filing Date (Form PCT/RO/105) will be issued in due course, subject to prescriptions concerning national security, and the date shown on this Acknowledgement Receipt will establish the international filing date of the application.

PTO/SB/08a (01-22)
Approved for use through 05/31/2024. OMB 0651-0031
U.S. Patent and Trademark Office; U.S. DEPARTMENT OF COMMERCE
Under the Paperwork Reduction Act of 1995, no persons are required to respond to a collection of information unless it contains a valid OMB control number.

INFORMATION DISCLOSURE STATEMENT BY APPLICANT

(Not for submission under 37 CFR 1.99)

Application Number	17691628
Filing Date	2022-03-10
First Named Inventor	Gregory Allan Thomas Hall
Art Unit	3761
Examiner Name	
Attorney Docket Number	INT-1001 CIP 2 C 4

U.S.PATENTS Remove

Examiner Initial*	Cite No	Patent Number	Kind Code[1]	Issue Date	Name of Patentee or Applicant of cited Document	Pages,Columns,Lines where Relevant Passages or Relevant Figures Appear
	1	4,383,158		1983-05-10	Takeshi Niwa	
	2	5,744,785		1998-04-28	Charng-Gwon Lee	
	3	10,009,965		2018-06-26	Hyun Sook Kim, et al.	

If you wish to add additional U.S. Patent citation information please click the Add button. Add

U.S.PATENT APPLICATION PUBLICATIONS Remove

Examiner Initial*	Cite No	Publication Number	Kind Code[1]	Publication Date	Name of Patentee or Applicant of cited Document	Pages,Columns,Lines where Relevant Passages or Relevant Figures Appear
	1					

If you wish to add additional U.S. Published Application citation information please click the Add button. Add

FOREIGN PATENT DOCUMENTS Remove

Examiner Initial*	Cite No	Foreign Document Number[3]	Country Code[2] i	Kind Code[4]	Publication Date	Name of Patentee or Applicant of cited Document	Pages,Columns,Lines where Relevant Passages or Relevant Figures Appear	T[5]
	1	DE 197 06 186	DE	A1	1998-08-20	Miele & Cie GmbH & Co.		X

INFORMATION DISCLOSURE STATEMENT BY APPLICANT (Not for submission under 37 CFR 1.99)	Application Number	17691628
	Filing Date	2022-03-10
	First Named Inventor	Gregory Allan Thomas Hall
	Art Unit	3761
	Examiner Name	
	Attorney Docket Number	INT-1001 CIP 2 C 4

	2	DE 42 43 004	DE	A1	1993-06-24	Miele & Cie GmbH & Co.		☒

If you wish to add additional Foreign Patent Document citation information please click the Add button Add

NON-PATENT LITERATURE DOCUMENTS Remove

Examiner Initials*	Cite No	Include name of the author (in CAPITAL LETTERS), title of the article (when appropriate), title of the item (book, magazine, journal, serial, symposium, catalog, etc), date, pages(s), volume-issue number(s), publisher, city and/or country where published.	T[5]
	1		

If you wish to add additional non-patent literature document citation information please click the Add button Add

EXAMINER SIGNATURE

Examiner Signature		Date Considered	

*EXAMINER: Initial if reference considered, whether or not citation is in conformance with MPEP 609. Draw line through a citation if not in conformance and not considered. Include copy of this form with next communication to applicant.

[1] See Kind Codes of USPTO Patent Documents at www.USPTO.GOV or MPEP 901.04. [2] Enter office that issued the document, by the two-letter code (WIPO Standard ST.3). [3] For Japanese patent documents, the indication of the year of the reign of the Emperor must precede the serial number of the patent document. [4] Kind of document by the appropriate symbols as indicated on the document under WIPO Standard ST.16 if possible. [5] Applicant is to place a check mark here if English language translation is attached.

INFORMATION DISCLOSURE STATEMENT BY APPLICANT (Not for submission under 37 CFR 1.99)	Application Number	17691628
	Filing Date	2022-03-10
	First Named Inventor	Gregory Allan Thomas Hall
	Art Unit	3761
	Examiner Name	
	Attorney Docket Number	INT-1001 CIP 2 C 4

CERTIFICATION STATEMENT

Please see 37 CFR 1.97 and 1.98 to make the appropriate selection(s):

That each item of information contained in the information disclosure statement was first cited in any communication from a foreign patent office in a counterpart foreign application not more than three months prior to the filing of the information disclosure statement. See 37 CFR 1.97(e)(1).

OR

☐ That no item of information contained in the information disclosure statement was cited in a communication from a foreign patent office in a counterpart foreign application, and, to the knowledge of the person signing the certification after making reasonable inquiry, no item of information contained in the information disclosure statement was known to any individual designated in 37 CFR 1.56(c) more than three months prior to the filing of the information disclosure statement. See 37 CFR 1.97(e)(2).

See attached certification statement.

The fee set forth in 37 CFR 1.17 (p) has been submitted herewith.

☒ A certification statement is not submitted herewith.

SIGNATURE

A signature of the applicant or representative is required in accordance with CFR 1.33, 10.18. Please see CFR 1.4(d) for the form of the signature.

Signature	/Ralph E. Jocke/	Date (YYYY-MM-DD)	2022-04-19
Name/Print	Ralph E. Jocke	Registration Number	31,029

This collection of information is required by 37 CFR 1.97 and 1.98. The information is required to obtain or retain a benefit by the public which is to file (and by the USPTO to process) an application. Confidentiality is governed by 35 U.S.C. 122 and 37 CFR 1.14. This collection is estimated to take 1 hour to complete, including gathering, preparing and submitting the completed application form to the USPTO. Time will vary depending upon the individual case. Any comments on the amount of time you require to complete this form and/or suggestions for reducing this burden, should be sent to the Chief Information Officer, U.S. Patent and Trademark Office, U.S. Department of Commerce, P.O. Box 1450, Alexandria, VA 22313-1450. DO NOT SEND FEES OR COMPLETED FORMS TO THIS ADDRESS. **SEND TO: Commissioner for Patents, P.O. Box 1450, Alexandria, VA 22313-1450.**

Privacy Act Statement

The Privacy Act of 1974 (P.L. 93-579) requires that you be given certain information in connection with your submission of the attached form related to a patent application or patent. Accordingly, pursuant to the requirements of the Act, please be advised that: (1) the general authority for the collection of this information is 35 U.S.C. 2(b)(2); (2) furnishing of the information solicited is voluntary; and (3) the principal purpose for which the information is used by the U.S. Patent and Trademark Office is to process and/or examine your submission related to a patent application or patent. If you do not furnish the requested information, the U.S. Patent and Trademark Office may not be able to process and/or examine your submission, which may result in termination of proceedings or abandonment of the application or expiration of the patent.

The information provided by you in this form will be subject to the following routine uses:

1. The information on this form will be treated confidentially to the extent allowed under the Freedom of Information Act (5 U.S.C. 552) and the Privacy Act (5 U.S.C. 552a). Records from this system of records may be disclosed to the Department of Justice to determine whether the Freedom of Information Act requires disclosure of these record s.

2. A record from this system of records may be disclosed, as a routine use, in the course of presenting evidence to a court, magistrate, or administrative tribunal, including disclosures to opposing counsel in the course of settlement negotiations.

3. A record in this system of records may be disclosed, as a routine use, to a Member of Congress submitting a request involving an individual, to whom the record pertains, when the individual has requested assistance from the Member with respect to the subject matter of the record.

4. A record in this system of records may be disclosed, as a routine use, to a contractor of the Agency having need for the information in order to perform a contract. Recipients of information shall be required to comply with the requirements of the Privacy Act of 1974, as amended, pursuant to 5 U.S.C. 552a(m).

5. A record related to an International Application filed under the Patent Cooperation Treaty in this system of records may be disclosed, as a routine use, to the International Bureau of the World Intellectual Property Organization, pursuant to the Patent Cooperation Treaty.

6. A record in this system of records may be disclosed, as a routine use, to another federal agency for purposes of National Security review (35 U.S.C. 181) and for review pursuant to the Atomic Energy Act (42 U.S.C. 218(c)).

7. A record from this system of records may be disclosed, as a routine use, to the Administrator, General Services, or his/her designee, during an inspection of records conducted by GSA as part of that agency's responsibility to recommend improvements in records management practices and programs, under authority of 44 U.S.C. 2904 and 2906. Such disclosure shall be made in accordance with the GSA regulations governing inspection of records for this purpose, and any other relevant (i.e., GSA or Commerce) directive. Such disclosure shall not be used to make determinations about individuals.

8. A record from this system of records may be disclosed, as a routine use, to the public after either publication of the application pursuant to 35 U.S.C. 122(b) or issuance of a patent pursuant to 35 U.S.C. 151. Further, a record may be disclosed, subject to the limitations of 37 CFR 1.14, as a routine use, to the public if the record was filed in an application which became abandoned or in which the proceedings were terminated and which application is referenced by either a published application, an application open to public inspections or an issued patent.

9. A record from this system of records may be disclosed, as a routine use, to a Federal, State, or local law enforcement agency, if the USPTO becomes aware of a violation or potential violation of law or regulation.

(19) BUNDESREPUBLIK DEUTSCHLAND

DEUTSCHES PATENTAMT

(12) **Offenlegungsschrift**

(10) **DE 42 43 004 A 1**

(51) Int. Cl.5: **F 24 C 7/08**
H 05 B 6/68

(21) Aktenzeichen: P 42 43 004.6
(22) Anmeldetag: 18. 12. 92
(43) Offenlegungstag: 24. 6. 93

DE 42 43 004 A 1

(30) Innere Priorität: (32) (33) (31)
19.12.91 DE 41 42 036.5

(71) Anmelder:
Miele & Cie GmbH & Co, 4830 Gütersloh, DE

(72) Erfinder:
Avenwedde, Josef, 4937 Verl, DE; Krümpelmann, Thomas, Dr., 4830 Gütersloh, DE

(54) Mikrowellengerät mit einer Sicherheitseinrichtung

(57) Die Erfindung betrifft ein Mikrowellengerät mit einer Sicherheitseinrichtung in Form einer als Lichtschranke ausgebildeten optischen Überwachungseinrichtung zur Überwachung des Garraums, die das Gerät bei Rauchentwicklung bzw. Flammenbildung außer Betrieb setzt und die im Bereich des Garraums angeordnet ist, wobei die Lichtschranke aus einem lichtsendenden Sender und einem lichtempfindlichen Empfänger besteht, wobei als Licht auch elektromagnetische Strahlung im infraroten Bereich bezeichnet sei.

Es soll ein Mikrowellengerät offenbart werden, bei dem eine Entstehung eines Brandes früh und unabhängig vom Zustand der zu erwärmenden Speise sensiert werden kann.

Hierzu wird die Überwachungseinrichtung dermaßen ausgebildet, daß der Empfänger auf elektromagnetische Strahlung in einer großen Bandbreite anspricht und daß im Weg zwischen Empfänger und Sender ein schmalbandiges Filter zur Spektralbegrenzung von elektromagnetischer Strahlung angeordnet ist, wobei das Filter eine Durchlaßwellenlänge besitzt, welche im Bereich einer Absorptionsbande des vorher bestimmten Verbrennungsprodukt-Moleküls liegt.

DE 42 43 004 A 1

Beschreibung

Die Erfindung betrifft ein Mikrowellengerät mit einer Sicherheitseinrichtung in Form einer als Lichtschranke ausgebildeten optischen Überwachungseinrichtung zur Überwachung des Garraums, die das Gerät bei Rauchentwicklung bzw. Flammenbildung außer Betrieb setzt und die im Bereich des Garraums angeordnet ist, wobei die Lichtschranke aus einem lichtsendenden Sender und einem lichtempfindlichen Empfänger besteht, wobei als Licht auch elektromagnetische Strahlung im infraroten Bereich bezeichnet sei.

Bei Mikrowellenherden kann es bei Einstellung von zu großen Garzeiten und zu hohen Mikrowellenleistungen zu einer Entzündung der Lebensmittel kommen. Es sind Mikrowellengeräte bekannt, in denen Sicherheitsschalter eingesetzt werden, die bei hoher Temperatur — erzeugt durch Feuer im Garraum — auslösen (EP A1 01 86 104) und das Magnetron sowie das Gebläse außer Betrieb setzen. Dabei wird der Brand meist erst bei einer Flammenbildung, also zu spät, erkannt, so daß eine Bekämpfung schwierig ist.

Um dem vorzubeugen, wird in Mikrowellengeräten der Einsatz von Sicherheitseinrichtungen vorgeschlagen, die bereits die Entstehung von Rauch erkennen. Ein solches Mikrowellengerät ist aus der DE-OS 37 30 579 bekannt. Dort wird als Sender eine lichtemittierende Diode, kurz LED, verwendet. In dieser Schrift wird bereits das Problem erkannt, daß der bei Normalbetrieb entstehende Wasserdampf ebenfalls zu einer Unterbrechung des Lichtstrahles führt. Deshalb wird vorgeschlagen, die Lichtschranke mit einer einstellbaren Wellenlänge zu versehen, derart, daß der bei Normalbetrieb entstehende Wasserdampf keine Abschaltung des Gerätes erzeugt. Aufgrund dieser Offenbarung ist aber nicht erkennbar, wie die Einstellung dieser Wellenlänge erfolgen soll und welcher Empfänger für den Empfang einer solchen spektralbegrenzten Strahlung in Frage kommt.

Der Erfindung stellt sich somit das Problem, ein Mikrowellengerät zu offenbaren, bei dem eine Entstehung eines Brandes früh und unabhängig vom Zustand der zu erwärmenden Speise sensiert werden kann.

Erfindungsgemäß wird dieses Problem mit den im Patentanspruch 1 angegebenen Merkmalen gelöst. Zweckmäßige Weiterbildungen und Ausgestaltungen ergeben sich aus den nachfolgenden Unteransprüchen.

Die mit der erfindungsgemäßen Ausbildung erreichbaren Vorteile bestehen darin, das hier der Gehalt von jeweils einem oder mehreren wählbaren Verbrennungsprodukten in der Garraumathmosphäre gemessen wird. Da bei Entstehung von Rauch unterschiedliche Verbrennungsprodukte an die Umgebung abgegeben werden, ist das Auftreten von meßbaren und vorher bestimmten Verbrennungsprodukten ein sehr sicheres Signal für den Beginn eines Brandes. Ein weiterer Vorteil besteht darin, daß mit der erfindungsgemäßen Ausbildung des Mikrowellengerätes ein Auftreten von Wasserdampf nicht zu einer Beeinträchtigung der Rauchsensierung führt.

Ein Ausführungsbeispiel der Erfindung ist in den Zeichnungen rein schematisch dargestellt und wird nachstehend näher erläutert. Es zeigen:

Fig. 1 Einen Querschnitt durch die Frontansicht eines erfindungsgemäß ausgebildeten Mikrowellengerätes in einer rein schematischen Darstellung,

Fig. 2 das Blockschaltbild einer Vorrichtung zur Sensierung von zu bestimmenden Verbrennungsprodukten.

Fig. 3 das Transmissionsspektrum von Luft im nahen Infrarotbereich.

Fig. 1 zeigt ein Mikrowellengerät in schematischer Darstellung. Der Garraum (1) dient zur Aufnahme von Gargut (2) und wird durch ein Magnetron (3) über einen Wellenleiter (4) mit Mikrowellenenergie beheizt. Die Leistungsansteuerung des Magnetrons (3) erfolgt mit Hilfe einer Mikroprozessorsteuerung (5).

Der Garraum (1) wird mit einer Lampe (6) während des Garvorgangs beleuchtet. Die Lampe (6) ist in einer der Seitenwände des Garraums (1) angeordnet. In der der Lampe (6) gegenüberliegenden Garraumwand (7) befindet sich eine fensterartige Aussparung in Form einer Bohrung (8). Diese Bohrung (8) ist so klein gehalten, daß ein Austritt von Mikrowellen aus dem Garraum (1) nicht möglich ist. Zum Garraum (1) hin kann sie durch eine lichtdurchlässige Scheibe aus Glas oder Kunststoff abgedeckt sein, um den Austritt von Kochdünsten aus dem Garraum (1) zu verhindern. Hinter der Bohrung (8) ist eine Vorrichtung zur Sensierung von den unterschiedlichen beim Verbrennungsprozeß von Lebensmitteln entstehenden und jeweils zu wählenden Gasen, beispielsweise CO_2, in Form einer Thermosäule (9) mit einem, angepaßt den Absorbtionsbanden des gewählten Verbrennungsproduktes, aufgedampften Interferenzfilter (10) angeordnet. Diese Thermosäule (9) gibt ein von der Konzentration des gewählten Verbrennungsproduktes im Garraum abhängiges Signal an die Mikroprozessorsteuerung (5) ab.

Fig. 2 zeigt die Vorrichtung zur Sensierung von Verbrennungsprodukten als Blockschaltbild. Die Lampe (6) strahlt in den Garraum (1) elektromagnetische Wellen mit einem Spektralbereich von ca. 0.1p µm bis 10 µm ab. In diesem Bereich liegt das sichtbare Licht und kurzwellige Infrarotstrahlung. Ein Teil dieser Strahlung tritt direkt oder nach Reflexion an den Garraumwänden durch die Bohrung (8) in der der Lampe (6) gegenüberliegenden Garraumwand (7). Von dort gelangt dieser Anteil auf das Interferenzfilter (10) und wird von diesem auf ein Spektrum mit sehr geringer Bandbreite begrenzt. Die durch das Interferenzfilter (10) durchtretende Strahlung gelangt auf die Thermosäule (9) und erzeugt dort ein elektrisches Signal. Dieses Signal wird zur weiteren Verarbeitung an die Mikroprozessor-Steuerung (5) des Mikrowellenherdes weitergegeben.

Weitere, in den Zeichnungen nicht dargestellte Möglichkeiten der Bandbegrenzung der elektromagnetischen Strahlung bestehen in der Verwendung einer bandbegrenzten Strahlungsquelle bzw. in der Verwendung eines bandbegrenzten Empfängers.

In **Fig.** 3 ist das Transmissionsspektrum von Luft dargestellt. Auf der Ordinate ist der Transmissionsgrad T, d. h. das Durchlaßvermögen über einen auf der Abszisse aufgetragenen Spektralbereich mit der Wellenlänge 1 von 0 µm bis 8 µm, aufgezeigt. Bei den im Beispiel mit CO_2 gekennzeichneten Minima im Transmissionsspektrum handelt es sich um Absorptionsbanden von Kohlendioxid, die mit H_2O gekennzeichneten Minima sind Absorptionsbanden von Wassermolekülen. Es besteht aber auch die Möglichkeit, die Absorbtionsbanden anderer Gase, die beim Verbrennungsprozeß von dem im Garraum befindlichen Gargut entstehen, abzulesen.

Das Verfahren zur Sensierung des Gehalts an entstehenden Verbrennungsprodukten in der Garraumathmosphäre sei im folgenden am Beispiel des CO_2- Gehaltes beschrieben:

Bei Entstehung eines Brandes steigt Rauch vom Gargut (2) auf. Dieser Rauch beinhaltet unterschiedliche Verbrennungsprodukte von Lebensmitteln, unter ande-

rem CO_2, welche sich im Garraum verteilen.

Ein Teilspektrum der elektromagnetischen Strahlung wird durch das CO_2 absorbiert. Liegt nun die Durchlaßwellenlänge des Interferenzfilters (10) im Bereich einer der Absorptionsbanden der CO_2-Moleküle, also in einem der Bereiche um 2,6 µm oder um 4,28 µm, so ist die Intensität der durch das Interferenzfilter (10) tretenden Strahlung von der CO_2-Konzentration im Garraum (1) abhängig. Auf diese Weise ist die von der Thermosäule (9) abgegebene Spannung umgekehrt proportional zum CO_2-Gehalt der Luft im Garraum (1). Eine Weiterverarbeitung des von der Thermosäule (9) abgegebenen Signals und die darauf erfolgende Ansteuerung des Magnetrons (3) ist aus dem Stand der Technik hinlänglich bekannt und soll hier nicht näher beschrieben werden.

Patentansprüche

1. Mikrowellengerät mit einer Sicherheitseinrichtung in Form einer als Lichtschranke ausgebildeten optischen Überwachungseinrichtung zur Überwachung des Garraums, die das Gerät bei Rauchentwicklung bzw. Flammenbildung außer Betrieb setzt und die im Bereich des Garraums angeordnet ist, wobei die Lichtschranke aus einem lichtsendenden Sender und einem lichtempfindlichen Empfänger besteht und wobei als Licht auch elektromagnetische Strahlung im infraroten Bereich bezeichnet sei, **dadurch gekennzeichnet**, daß im Strahlungsweg Sender — Lichtweg — Empfänger zumindestens eine Vorrichtung zur Spektralbegrenzung von elektromagnetischer Strahlung angeordnet ist, welche eine Durchlaßwellenlänge besitzt, die im Bereich der Absorptionsbanden des jeweils vorher bestimmten Verbrennungsprodukt-Moleküls des Gargutes liegt.

2. Mikrowellengerät nach Anspruch 1, gekennzeichnet durch ein Interferenzfilter (10) zur Spektralbegrenzung von elektromagnetischer Strahlung, welches vor dem Empfänger angeordnet ist.

3. Mikrowellengerät nach einem der Ansprüche 1 oder 2, dadurch gekennzeichnet, daß der Empfänger als Thermosäule (9) mit einem aufgedampften Interferenzfilter (10), welcher im Bereich einer Absorbtionsbande des jeweils zu betrachtenden Verbrennungsproduktes liegt, ausgebildet ist.

4. Mikrowellengerät nach einem der Ansprüche 1 oder 2, dadurch gekennzeichnet, daß das Filter und der Empfänger außerhalb des Garraums angeordnet sind, wobei vor dem Filter eine fensterartige Öffnung in der Garraumwand angeordnet ist.

Hierzu 2 Seite(n) Zeichnungen

– Leerseite –

Nummer: DE 42 43 004 A1
Int. Cl.[5]: F 24 C 7/08
Offenlegungstag: 24. Juni 1993

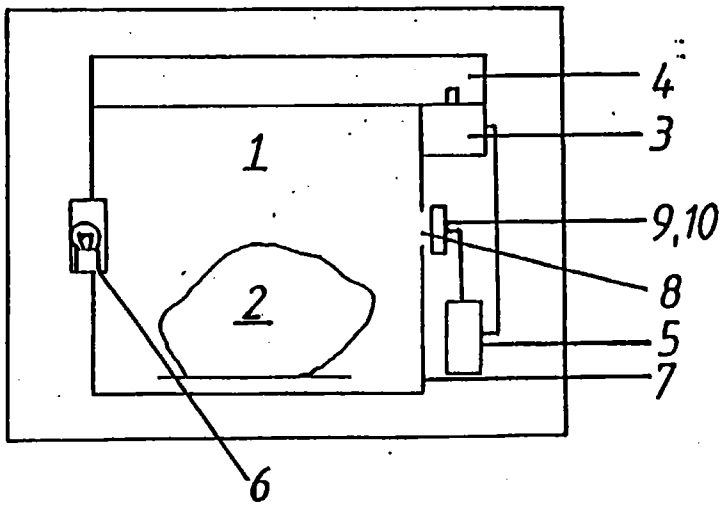

FIG. 1

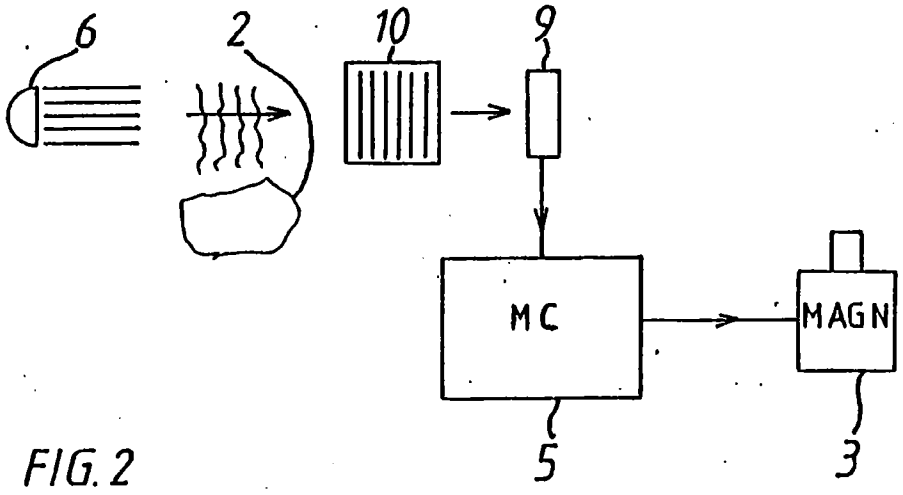

FIG. 2

Nummer: DE 42 43 004 A1
Int. Cl.5: F 24 C 7/08
Offenlegungstag: 24. Juni 1993

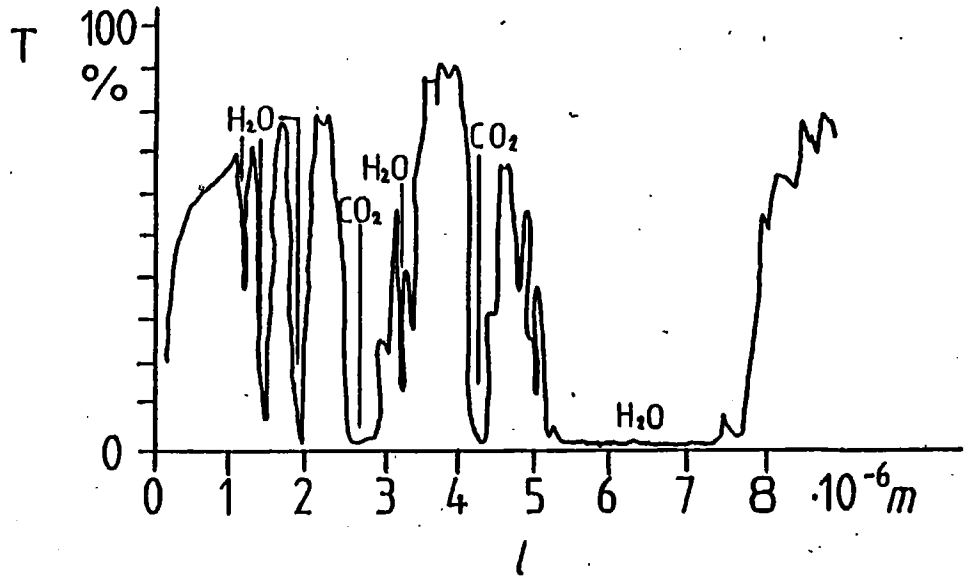

FIG. 3

1. DE000004243004 - Oven with visible or infrared spectroscopic combustion detector - uses wavelength=selective property of interference filter disposed on sensor of light transmitted across cooking space

Translated by wipo
Note: Text based on automatic Optical Character Recognition processes. Please use the PDF version for legal matters
[DE].

Description

The invention relates to a microwave device having a safety device in the form of an optical monitoring device designed as a light barrier for monitoring the cooking chamber, which device sets the device out of operation in the event of smoke development or flame formation and which is arranged in the region of the cooking chamber, wherein the light barrier consists of a light-transmitting transmitter and a light-sensitive receiver, wherein electromagnetic radiation in the infrared range is also referred to as light.
In microwave ovens, ignition of the foodstuffs can occur when setting too large cooking times and at high microwave powers. Microwave devices are known in which safety switches are used which, at high temperature, are triggered by fire in the cooking chamber (EP A1 01 86 104) and the magnetron as well as the blower. In this case, the fire is usually detected only in the event of a flame formation, that is too late, so that control is difficult.
In order to prevent this, the use of safety devices is proposed in microwave devices which already detect the occurrence of smoke. Such a microwave device is known from DE-OS 37 30 579. There, a light-emitting diode, short LED, is used as the transmitter. In this document, the problem is already recognized that the water vapor produced during normal operation likewise leads to an interruption of the light beam. It is therefore proposed to provide the light barrier with an adjustable wavelength in such a way that the water vapour produced during normal operation does not produce a shutdown of the device. On the basis of this disclosure, however, it is not possible to identify how the adjustment of this wavelength is to take place and which receiver is suitable for receiving such a spectrally limited radiation.
The invention thus relates to the problem of disclosing a microwave device in which the occurrence of a fire can be sensed early and independently of the state of the food to be heated. According to the invention, this problem is solved by the features specified in claim 1. Expedient developments and embodiments result from the following dependent claims.

The advantages that can be achieved with the design according to the invention are that the content of in each case one or more selectable combustion products is measured in the smoke atmosphere. Since different combustion products are delivered to the environment when smoke is produced, the occurrence of measurable and previously determined combustion products is a very reliable signal for the start of a fire. A further advantage is that the formation of the microwave device according to the invention does not lead to an impairment of the smoke sensing.

An exemplary embodiment of the invention is illustrated purely schematically in the drawings and is explained in more detail below. The figures show:

FIG. 1 shows a cross-section through the front view of a microwave device designed according to the invention in a purely schematic representation,

FIG. 2 shows the block diagram of a device for sensing combustion products to be determined.

FIG. 3 shows the transmission spectrum of air in the near infrared range.

FIG. 1 shows a microwave device in a schematic representation. The cooking chamber (1) is used to receive food (2) to be cooked and is heated by a magnetron (3) via a waveguide (4) with microwave energy. The power control of the magnetron (3) is carried out with the aid of a microprocessor controller (5).

The cooking chamber (1) is illuminated with a lamp (6) during the cooking process. The lamp (6) is arranged in one of the side walls of the cooking chamber (1). A window-like recess in the form of a bore (8) is located in the cooking chamber wall (7) opposite the lamp (6). This bore (8) is kept so small that it is not possible to exit microwaves from the cooking chamber (1). Towards the cooking chamber (1), it can be covered by a transparent pane made of glass or plastic in order to prevent cooking vapours from escaping from the cooking chamber (1). Behind the bore (8) there is provided a device for sensing the different gases produced during the combustion process of foodstuffs and to be selected in each case, for example CO 2, in the form of a thermopile (9) with one, adapted to the absorption bands of the selected combustion product Vapour-deposited interference filters (10) are arranged. This thermopile (9) outputs a signal dependent on the concentration of the selected combustion product in the cooking chamber to the microprocessor controller (5).

FIG. 2 shows the device for sensing combustion products as a block diagram. The lamp (6) radiates electromagnetic waves into the cooking chamber (1) with a spectral range of approximately 0.1p μm to 10 μm. In this region, the visible light and short-wave infrared radiation are located. Some of these radiation passes directly or after reflection at the cooking chamber walls through the bore (8) in the cooking chamber wall (7) opposite the lamp (6). From there, this fraction reaches the interference filter (10) and is limited by the latter to a spectrum with a very low bandwidth. The radiation passing through the interference filter (10) reaches the thermopile (9) and generates an electrical signal there. This signal is transmitted to the microprocessor controller (5) of the microwave oven for further processing.

Further possibilities for limiting the band limitation of the electromagnetic radiation, which are not shown in the drawings, consist in the use of a band-limited radiation source or the use of a band-limited receiver.
The transmission spectrum of air is shown in FIG. 3. On the ordinate, the transmittance T, ie the transmission power via a spectral range plotted on the abscissa and having the wavelength 1 of 0 μm to 8 μm, is shown. The minima in the transmission spectrum identified in the example with CO 2 are absorption bands of carbon dioxide, the minima marked H 2O are absorption bands of water molecules. However, it is also possible to read the absorption bands of other gases which arise during the combustion process from the food to be cooked in the cooking chamber.
The method for sensing the content of resulting combustion products in the smoke atmosphere is described in the following on the example of the CO 2 content:
When a fire occurs, smoke rises from the food (2) to be cooked. This smoke contains different combustion products of foodstuffs, inter alia CO 2, which are distributed in the cooking chamber.
A partial spectrum of the electromagnetic radiation is absorbed by the CO 2. If the transmission wavelength of the interference filter (10) is now in the region of one of the absorption bands of the CO 2 molecules, that is to say in one of the regions by 2.6 μm or by 4.28 μm, the intensity of the radiation passing through the interference filter (10) is dependent on the CO 2 concentration in the cooking chamber (1). In this way, the voltage delivered by the thermopile (9) is inversely proportional to the CO 2 content of the air in the cooking chamber (1). Further processing of the signal emitted by the thermopile (9) and the actuation of the magnetron (3) taking place thereon is well known from the prior art and should not be described in more detail here.

Claims

1. 1. The invention relates to a microwave device having a safety device in the form of an optical monitoring device designed as a light barrier for monitoring the cooking chamber, which device sets the device out of operation in the event of smoke development or flame formation and which is arranged in the region of the cooking chamber, wherein the light barrier consists of a light-transmitting transmitter and a light-sensitive receiver, and wherein electromagnetic radiation in the infrared range is also referred to as light characterized in that at least one device for the spectral limitation of electromagnetic radiation is arranged in the radiation path of the transmitter/light path receiver, said device having a passage wavelength which lies in the region of the absorption bands of the respective previously determined combustion product molecule of the food to be cooked.
2. 2. Microwave apparatus according to claim 1, characterised by an interference filter (10) for the spectral limitation of electromagnetic radiation which is arranged in front of the receiver.

3. 3. Microwave appliance according to either of Claims 1 and 2, characterized in that the receiver is designed as a thermopile (9) with a vapour-deposited interference filter (10), which lies in the region of an absorption band of the combustion product to be considered in each case.
4. 4. Microwave appliance according to either of Claims 1 and 2, characterized in that the filter and the receiver are arranged outside the cooking chamber, wherein a window-like opening is arranged in the cooking chamber wall in front of the filter.

Nummer: DE 42 43 004 A1
Int. Cl.5: F 24 C 7/08
Offenlegungstag: 24. Juni 1993

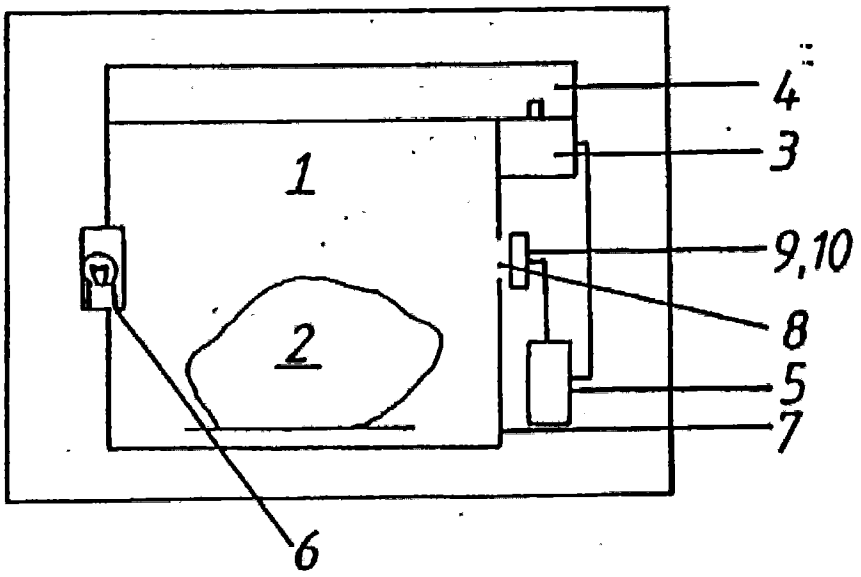

FIG. 1

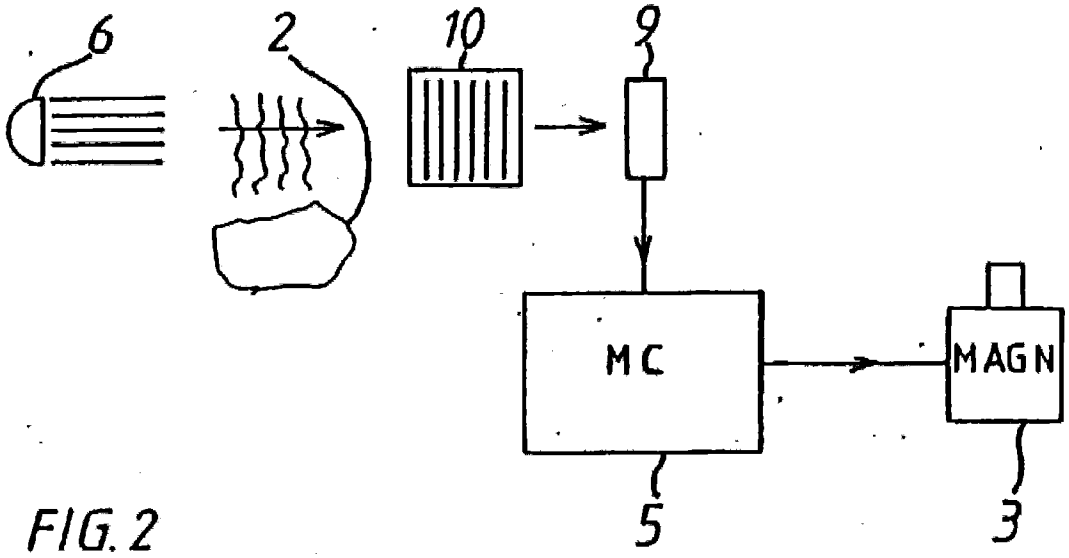

FIG. 2

Nummer: DE 42 43 [illegible] A1
Int. Cl.5: F 24 C 7/08
Offenlegungstag: 24. Juni 1993

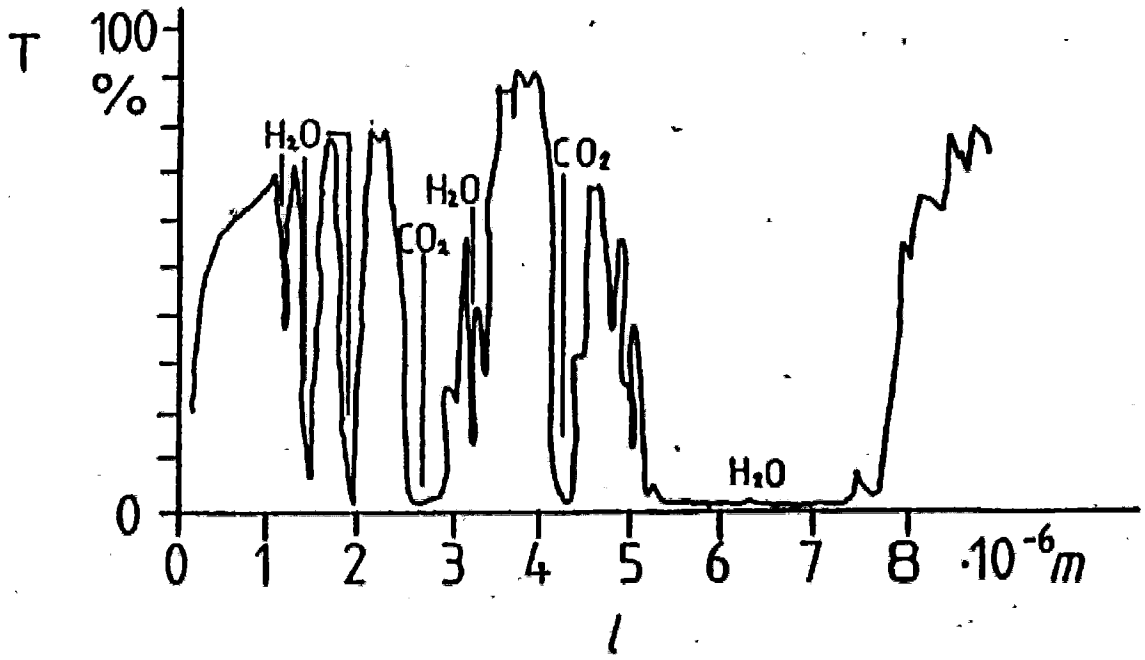

FIG. 3

1. DE000019706186 - Pyrolytic cleaning operation control method for cooking esp. roasting oven

Translated by wipo
Note: Text based on automatic Optical Character Recognition processes. Please use the PDF version for legal matters
[DE].

Description

The invention relates to a baking oven having a cooking chamber which has at least one heating body for heating, a temperature sensor, an exhaust air opening and a catalyst in the exhaust air opening, and having an electronic control and evaluation device and having a device for pyrolysis cleaning. The invention also relates to a method for controlling a pyrolysis cleaning process.
It is generally known that cooking chamber soiling can be eliminated in a pyrolytic cleaning process without being subjected to the user in a temporal and physical manner. To this end, the decision for initiating the self-cleaning process is dependent on different conditions. In addition to the possibility of completely transferring cleaning start and duration to the user, various methods are also offered by the manufacturer to substantially remove these decisions to the user. DE-PS 30 21 427 discloses an initiation of the cleaning that is dependent on a timing circuit. However, this has the disadvantage that solid cleaning cycles are carried out, which also conduct cleaning if the contamination of the cooking chamber walls would still require pyrolysis. The enamelling of the cooking chamber walls can suffer from frequently carried out cleaning processes and the energy consumption is unnecessarily high.
Furthermore, it is known from DE-PS 40 17 628 to provide an objective-based initiation of the pyrolysis cleaning process by detecting the contamination values and a limit value comparison. In DE-OS 41 27 388 it is proposed as a further possibility to form the pyrolysis objective with electronic means. For this purpose, sensors are arranged in the cooking chamber, which detect the soiling values and pass them to an evaluation circuit. The evaluation circuit signals the degree of soiling and thereupon recommends or carries out a cleaning operation. However, these sensors must be additionally arranged at suitable points in the cooking chamber and can also be suitable for the extreme temperature conditions during a pyrolysis process. Furthermore, it is negative that the sensors are located at different points of the cooking chamber walls and are therefore also contaminated differently. The sensed results therefore cannot always provide exact information about the contamination state of the cooking chamber.

EP 0 537 796 discloses a stove with pyrolysis cleaning and a catalyst in the exhaust air opening, which has to be brought to its operating temperature only due to the design, before it can clean smoke escaping from the cooking chamber. The catalyst does not have its own heater and no means for detecting the temperature prevailing at it.

In order to achieve the operating temperature of the catalyst, the cooking chamber is heated up with maximum power of its heating bodies to a temperature value in which only little smoke is formed in the cooking chamber. A reduction of the power of the heating bodies and the cooking chamber temperature are then carried out at this temperature value for a fixed time until the temperature of the catalyst has approached its operating temperature. However, this has the disadvantage that, depending on the exhaust air volume flow and cooking chamber contamination during the power increase of the cooking chamber heating, undesirably high catalyst temperatures are achieved or, in the fixed waiting time, the catalyst temperature is still clearly too low. As a result, the catalyst is not always able to burn all residues. The latter are then unburnt to the surroundings of the device.

The problem addressed by the invention is therefore that of designing a baking oven in such a way that a method for controlling a pyrolysis cleaning process can proceed in such a way that the respective type and quantity of soiling of the cooking chamber is intended to determine the duration of a pyrolysis process, wherein only a maximum quantity of smoke which is so large can be obtained on the catalyst in such a way that it can be completely reacted there. In addition, incorrect loads should also be detected during the cleaning process.

According to the invention, this problem is solved by a baking oven and a method having the features specified in claims 1 and 9. Advantageous embodiments and developments of the invention result from the following dependent claims.

The advantages which can be achieved by the invention consist in addition to an energy consumption which is adapted to the degree of soiling during the cleaning process, in particular also in that during the heating phase the smoke development in the cooking chamber is kept low until the catalyst has reached its operating temperature. To this end, the baking oven has a circuit for limiting the smoke. If too much smoke is produced which cannot yet process the catalyst due to its still unreached operating temperature, the cooking chamber heating is switched off or reduced to such an extent that the currently present cooking chamber temperature can be kept until the catalytic converter has reached its operating temperature. The catalyst can thereby provide an optimum result and will not be overridden. The greater the contamination in the cooking chamber, the higher the amount of smoke produced on the catalyst and the more often the cooking chamber heating is switched off even in the heating phase. The combustion heat at the catalyst increases with the size of the burning residues. The heat supplied by the cooking chamber is then reduced if the contamination decreases. This determination is detected by the temperature sensor on the catalytic converter and transmitted to an electronic control and evaluation device. This realizes its contamination-dependent duration for each cleaning process.

In an advantageous embodiment of the invention, the circuit for limiting smoke is composed of a device for smoke sensing, the electronic evaluation device and at least one additional switching

means for interrupting the heating elements for heating the cooking chamber. In a particularly advantageous embodiment, components already present in the baking oven are used as a device for smoke sensing. Smoke sensing can be carried out in particular by an intrinsically heated and temperature-controlled catalyst in conjunction with its temperature sensor. The additional switching means is advantageously connected in series with an already generally known switching means for starting and regulating the heating bodies. Another advantageous implementation variant provides a control for the amount of smoke which is connected in series with the temperature control of the baking oven without requiring an additional switching means. A particular advantage results when the catalyst is composed of two ceramic honeycombs arranged one behind the other, a heating element at the catalyst inlet and the temperature sensor in its middle between the ceramic honeycombs. For improved ventilation of the cooking chamber, a vapour extraction fan is arranged in the suction path at the catalyst outlet. In order to largely exclude buffers on the catalyst, an arrangement of a single-layer or multi-layer metal screen upstream of the catalyst inlet is useful. If, in an advantageous embodiment, a heating element is arranged as an outer heating circuit of an underwater heating body, better cleaning in the baking muffle frame region can be achieved. A further advantage can be seen in the fact that the quantity and the type of soiling can be inferred on the basis of the number and the associated cooking chamber temperatures of the shut-off circuits caused by smoke and the heating of the cooking chamber. Switching the heating elements in the cooking chamber several times already in the heating phase, is a character for burnt fresh fats, while older soiling usually only leads to the switching off of the heating bodies during the holding phase.

The duration of the method for controlling the pyrolysis cleaning process is newly determined with the inclusion of the current soiling values of the cooking chamber during each cleaning process. This means that the duration can be adapted to the respective soiling state of the cooking chamber. After the start of the "pyrolysis" operating mode, the heating of the catalyst and of the cooking chamber is started simultaneously. The current soiling value of the cooking chamber is determined on the basis of the smoke development by the device for smoke sensing. The pyrolysis duration necessary for eliminating the existing contamination is selected from a memory by assigning to the respective contamination value. The pyrolysis process is subdivided into a heating, holding and cooling phase.

In an advantageous embodiment of the method, the target catalyst temperature or the catalyst target heating power is stored in an electronic evaluation unit in order to maintain this target catalyst temperature and threshold values for the maximum catalyst temperature or the minimum catalyst heating power which correspond to a value for a predefined maximum smoke quantity. In comparison with the currently measured values, the amount of smoke produced on the catalyst is determined. If the measured quantity of smoke is greater than the maximum amount of smoke possible for a satisfactory operation of the catalytic converter, the cooking chamber heating is switched off by means of a switching means. The cooking chamber temperature must not rise above a predetermined temperature value until the target catalyst temperature is not at least almost reached.

A further special embodiment of the inventive method provides that a safety cut-off of the heating elements for cooking chamber heating takes place when the selected cooking chamber temperature is not reached within a time which is stored in the electronic control unit and assigned to the respective operating mode.

An exemplary embodiment of the invention is illustrated purely schematically in the drawings and is described in more detail below. The figures show:

FIG. 1 is a schematic diagram of a baking oven with a device for limiting smoke

FIG. 2 shows a section through a side view of a baking oven with a catalyst and a vapor extraction fan

FIG. 3 shows a cooking chamber temperature-time diagram in the case of strong furnace pollution

FIG. 4 shows a cooking chamber temperature-time diagram with low furnace pollution

FIG. 5 shows a temperature-time diagram with catalyst and cooking chamber temperature profiles

FIG. 6 shows a catalyst heating power-time diagram during a pyrolysis process.

FIG. 1 shows a baking oven (1) with a device for limiting smoke (10). At least one heating element (2) for heating the cooking chamber (1.1) is arranged in the baking oven (1). Furthermore, a temperature sensor (3) for detecting the interior temperature (TG) of the cooking chamber and preferably an exhaust air opening (5), in which a catalytic converter (8) is introduced, are located inside the cooking chamber (1.1). The catalyst (8) is equipped with heating elements (6) for self-heating and also has a temperature sensor (7) for detecting the catalyst temperature (TK). The temperature sensor (7) is connected to an electronic evaluation unit (9) and a catalyst temperature control device (11), both of which are part of an electronic control and evaluation device (16). Parameters output by the user to an operating device (17) continue into the control and evaluation device (16). A plurality of evaluated signals can be selected by the user in order to then make them visible in the display display (18). In order to limit smoke, in particular during a pyrolysis process, an additional switching means (S2) is necessary for interrupting the heating elements (2) as a function of the catalyst temperatures (TK). This switching means (S2) is connected in series with a known switching means (S1) for starting and regulating the heating elements (2). A target catalyst temperature value (TK soll) and an upper catalyst temperature threshold value (TK sch) are stored in the electronic evaluation unit (9). The temperature sensor (7) continuously detects the currently present catalyst temperatures (TK) during a switched-on operating mode of the baking oven (1). These measured values are forwarded to the evaluation unit (9) and compared with the catalyst temperature threshold value (TK sch) stored there. This temperature threshold value (TK sch) has previously been determined in tests and lies outside the control range of the catalyst temperature control in a clean baking oven (1). When this temperature threshold value (TK sch) is exceeded, the switching means (S2) switches off the heating element (2) for heating the cooking chamber (1. 1). If the catalyst temperature (TK is) then decreased to a value below the temperature threshold value (TK sch), the switching means (S2) switches the cooking chamber heating body (2) again.

Such a control is necessary because, as the cooking chamber temperature (TG) increases, fat vapors are always produced in the furnace chamber, which produce combustion heat at the catalytic converter (8). The catalyst (8) is heated to a temperature (TK) which is above its temperature threshold value (TK sch), although its own heating can be switched off. Whenever the catalyst target temperature value (TK soll) is exceeded, the catalyst heating bodies (6) switch off and only when this value is undershot again, the heating elements (6) are switched on again. This switching on and off is repeated until no more smoke is produced on the catalytic converter (8). The catalyst (8) is thereby provided to a device for smoke sensing. An electronic evaluation unit (9) assumes the function of a smoke limiter in conjunction with the switching means (S2) and the catalytic converter (8). The switching means (S2) switches off the cooking chamber heating element (2) at a catalyst temperature (TK) above the upper temperature threshold value (TK sch). It only releases it again when the catalyst temperature (TK) has dropped below the temperature threshold value (TK sch). The switching means (S2) is connected in series with a switch (S3) for regulating the catalyst temperature. A safety cut-off of the heating elements (2) of the baking oven (1) is also carried out when the selected cooking chamber temperature (TG) is not reached within a time (t max) associated with the respective operating mode, because then, for example, cooking material still remains in the cooking chamber (1) during the pyrolysis. 1) or a fault has occurred in the control and evaluation device (16).

FIG. 2 shows a section through a side view of a baking oven (1) with a catalytic converter (8) arranged in the exhaust air opening (5) of the cooking chamber (1.1). The catalyst inlet (8.1) faces the cooking chamber (1.1), while the catalyst outlet (8.2) points to the suction side of a vapour extraction fan (14). In this example, the catalyst (8) consists of two ceramic honeycombs (13) arranged one behind the other and a heating element (6) at the catalyst inlet (8.1). A temperature sensor (7) for detecting the catalyst temperature (TK) is arranged in the middle between the ceramic honeycombs (13). The vapour extraction fan (14) sucks in the catalyst outlet (8). 2) the purified air mixes with device cooling air and blows it out of the baking oven (1) (sh. The course of the arrows). Since, when the alcohol or similar substances are volatilised in the cooking chamber, buffers can occur on the catalyst, a single-layer or multi-layer metal grid (15) is arranged in front of the catalyst inlet (8.1). As a result of this simple structural modification, buffering can be largely restricted. The heating elements (2) are not shown here for a better overview. If, for example, an underheat radiator and an additional heating body are also arranged as an outer heating circuit for an upper heat radiator, good cleaning can thereby also take place in the baking muffle frame region.

FIG. 3 shows a temperature-time diagram in the case of strong furnace pollution. At the beginning of the pyrolysis cleaning process, heating of the cooking chamber (1.1) and of the catalytic converter (8) can begin simultaneously or separately. The cooking chamber temperatures (TG) and catalyst temperatures (TK) can be regulated separately. During the heating phase, the cooking chamber (1) 1) to a temperature value (TG soll), this temperature value (TG soll) is maintained until the catalyst (8) has reached its operating temperature and then rises again because the catalytic converter (8) can now process the amount of smoke (R)

produced. If, however, an excessively large amount of smoke (R is) is formed at the elevated cooking chamber temperatures, the catalyst (8) cannot process this entire quantity of smoke (R) and its temperature (TK is) rises above a temperature threshold value (TK sch). The cooking chamber heating body (2) is then either switched off or controlled in such a way that the current temperature value is maintained until the catalytic converter (8) has again reached its operating temperature. This process is repeated until the pyrolysis temperature (TG Py) is reached in the cooking chamber. The pyrolysis temperature (TG py) is then kept until the amount of smoke (R) is no longer sensed by the catalyst (8). The electronic control and evaluation device (16) then switches off the cooking chamber heating element (s) (2) and starts the cooling phase. During the cooling phase, it is expedient to activate a closure device, not shown in the figures, of the oven door for protection for the user until the cooking chamber temperatures (TG) have dropped to approximately 300° C.

FIG. 4 shows a cooking chamber temperature-time diagram with low furnace contamination. As a result of the low contamination, only a small amount of smoke is produced during the heating of the cooking chamber (1.1). The cooking chamber temperature (TG) rises to the temperature value (TG Py) for carrying out the pyrolytic cleaning. In this case, it does not need to be kept at a temperature threshold value (TG sch) in the meantime, so that the catalyst (8) can reach its temperature threshold value (TK sch), because only little smoke is produced during the pyrolysis cleaning and therefore no overloading of the catalytic converter (8) takes place.

FIG. 5 shows a temperature-time diagram with the catalyst (upper curve) and cooking chamber temperature curves (lower curve) during the performance of a pyrolysis process. A target catalyst temperature (TK soll) and an upper catalyst temperature threshold value (TK sch) are stored in the evaluation device (9) as a component of the electronic control and evaluation device (16). Up to this catalyst temperature threshold value (TK sch), a maximum possible amount of smoke (R max) can still be processed by the catalyst. The temperature sensor (7) detects the current catalyst temperature (TK) during a switched-on operating mode, in particular also when carrying out a pyrolysis cleaning process. These temperature values (TK) are transmitted to the analysis device (9) and are compared there with the stored catalyst temperature threshold value (TK sch). If the current catalyst temperatures (TK) are greater than the catalyst temperature threshold value (TK sch), the switching means (S2) temporarily switches off the oven heating or keeps the cooking chamber temperature (TG) at a reached temperature value until the catalyst temperatures (TK) have fallen below the catalyst temperature threshold value (TK sch) (dotted regions show the regions in which the maximum processable smoke quantity (R max) is exceeded). The catalyst heating body (6) is switched off by the electronic control and evaluation device (16) when the current catalyst temperatures (TK) have risen above the catalyst temperature setpoint value (TK soll). If the catalyst temperature setpoint value (TK soll) is undershot again, the catalyst heating body (6) is switched on again (dashed region). In the electronic control and evaluation device (16), the target catalyst temperature (TK soll) or the catalyst target heating power (PK soll) for maintaining the target catalyst temperature (TK soll) and a catalyst threshold temperature (TK sch) and/or a catalyst threshold heating power (PK sch) which correspond to a

value for a predetermined smoke quantity (R max). In comparison with the currently measured values (TK, PK), a quantity of smoke (R) occurring on the catalytic converter (8) is determined therefrom. If the current smoke quantity (R) is greater than the maximum smoke quantity (R max) to be processed by the catalytic converter (8), a further increase in the cooking chamber temperature (TG) is prevented. The cooking chamber temperature (TG) is reduced and held by a value stored in the control and evaluation device (16), or the switching means (S2) switches off the oven heating body. If the current smoke quantity (R) is again smaller than the amount of smoke (R max) to be processed at the maximum of the catalytic converter, the switching means (S2) switches the baking oven heating bodies (2) again.

FIG. 6 shows a diagram of the catalyst heating power (PK) during the time of a pyrolysis process. The method for limiting smoke can also use the instantaneous catalyst heating power or an indirect measure for determining the gas or smoke quantity (R) currently occurring at the catalytic converter (8). As an indirect measure, for example, the ratio of the switch-on to switch-off time of the catalyst heating elements (6) can be used. The catalyst heating power (PK) for maintaining the target catalyst temperature (TK soll) is input in the catalyst temperature control unit (11). This heating power can be updated during operation. To this end, the greatest necessary heating power (P) is assigned to the ratios of an empty cooking chamber at a cooking chamber temperature (TG). If combustible gases fall on the catalytic converter (8), the electrical heating energy to be applied is reduced. A heating power threshold value (PK sch) for the catalyst heating power (PK) is clearly below the predetermined value for a clean baking oven (1). When the threshold value (PK sch) falls below the threshold value (PK sch), the switching means (S2) switches off the cooking chamber heating body (2), when the threshold value (PK sch) is exceeded, the switching means (S2) switches the cooking chamber heating body (2) again. The inclusion of the catalyst heating power (PK) in the method for limiting the smoke in a baking oven (1) is even more sensitive than the method, taking into account the upper temperature threshold value (TK sch) for the catalyst (8) and therefore even better for smoke limitation on the catalytic converter (8). In the case of the temperature threshold method (see figure 5), it is necessary to wait until the electric catalyst heating has been reduced to zero. If the catalyst temperature (TK is) clearly above the target catalyst temperature (TK soll), the heating elements (2) are switched off. If the catalyst heating capacity is monitored, on the other hand, the heating power required to maintain the catalyst temperature (TK) can be reduced to the cooking chamber heating body (2) at any predeterminable reduction in the heating power required to maintain the catalyst temperature (TK).

Claims

1. 1. Baking oven with a cooking chamber which has at least one heating body for heating, a temperature sensor, an exhaust air opening and a catalyst in or in connection with the exhaust air opening, and having an electronic control and evaluation device and having a device for pyrolysis cleaning,

   at least one catalyst heating element (6) and a temperature sensor (7) are associated with the catalytic converter (8), and

   a circuit arrangement (10) for limiting the smoke is arranged in conjunction with the electronic control and evaluation device (16).

2. 2. Baking oven according to Claim 1, characterized in that the circuit (10) for smoke limiting comprises a device for smoke sensing (7, 8), an electronic evaluation device (9) for controlling the heating bodies (2), and at least one switching means (S2) for switching off the heating bodies (6).
3. 3. Baking oven according to at least one of the aforementioned claims 1 or 2, characterised in that the device for smoke sensing is composed of the temperature-controlled catalyst (8) and the temperature sensor (7).
4. 4. Baking oven according to at least one of the aforementioned claims 1 to 3, characterised in that the evaluation device (9) and/or a catalyst temperature control device (11) and/or a cooking chamber temperature control unit (12) are components of the electronic control and evaluation device (16).
5. 5. Baking oven according to at least one of the aforementioned claims 1 to 4, characterised in that the catalyst (8) has two ceramic honeycombs (13) arranged one behind the other, wherein the catalyst heating body (6) is arranged at the catalyst inlet (8.1) and the temperature sensor (7) is arranged centrally between the ceramic honeycombs (13).
6. 6. Baking oven according to claim 5, characterised in that a single-or multi-layer metal screen (15) is arranged in front of the catalyst inlet (8.1).
7. 7. Baking oven according to at least one of the aforementioned claims 1 to 6, characterised in that a vapour extraction fan (14) is arranged at the catalyst outlet (8.2).
8. 8. Baking oven according to at least one of the aforementioned claims 1 to 7, characterised in that the switching means (S2) is connected in series with a switching means (S1) for starting and regulating the heating elements (2).
9. 9. The invention relates to a method for controlling a pyrolysis cleaning process in a baking oven according to at least one of claims 1 to 8, characterised in that at the beginning of the pyrolysis cleaning process, heating of the cooking chamber (1.1) and of the catalytic converter (8) start simultaneously or separately, wherein cooking chamber temperatures (TG) and catalyst temperatures (TK) can be regulated separately and that

during the pyrolysis cleaning process a smoke sensing and smoke limitation takes place in the baking oven (1) wherein the quantity of smoke (Rist) produced on the catalytic converter (8) is superimposed as a control variable for controlling the cooking chamber temperature (TGist).

10. 10. The method according to claim 9, characterized in that before the start of the pyrolysis cleaning process, a maximum temperature value (TGmax) for the cooking chamber is defined, which is below the pyrolysis temperature (TGPy) and is to be maximally achievable when the catalytic converter (8) is heated but not having its target temperature (TKsoll), and that this temperature value (TGmax) is stored in the electronic control and evaluation device (16) and that after the start of the Pyrolysis cleaning process of the cooking chamber. (1.1) First only up to the temperature value (TGmax) is heated, this temperature value (TGmax) is kept until the catalyst has reached its target temperature (TKsoll) and is then increased until the pyrolysis temperature (TGPy) is reached.
11. 11. Method according to at least one of Claims 9 or 10, characterized in that a necessary pyrolysis duration is stored and implemented in the electronic control and evaluation device (16) for the respective smoke quantity (Rist) and/or type of soiling of the cooking chamber (1.1), wherein the respective current smoke quantity (Rist) is determined by a device for smoke sensing (10) and indicates the type of soiling.
12. 12. The method according to at least one of claims 9 to 11, characterized in that in the electronic control and evaluation device (16) the target catalyst temperature (TKsoll) or the catalyst target heating power (PKsoll) for maintaining the catalyst target temperature (TKsoll) and a catalyst threshold temperature (TKsch) and/or a catalyst threshold heating power (PKsch) are stored which correspond to a value for a predetermined amount of smoke (Rmax) and that, in comparison with the respective currently measured values (TKist, PKist), a quantity of smoke (Rist) occurring at the catalytic converter (8) is determined therefrom and that when (Rist) > (R max) a further rise in the cooking chamber temperature (TGist) is prevented, wherein the cooking chamber temperature (TGist) is reduced and held by a value stored in the control and evaluation device (16), or the switching means (S2) switches off the baking oven heating body and that, on reaching (Rist) < (R max) the switching means (S2) switches on the baking oven heating bodies again.
13. 13. Method according to at least one of Claims 9 to 12, characterized in that the cooking chamber temperature (TGist) does not exceed a predeterminable value (TGmax) until the catalyst target temperature (TKsoll) is not at least almost reached.
14. 14. Method according to at least one of Claims 9 to 13, characterized in that a safety shutdown of the baking oven (1) takes place when the selected cooking chamber temperature (TG) is not reached within a time (tmax) assigned to the respective operating mode.

15. 15. Method according to at least one of Claims 9 to 14, characterized in that the pyrolysis temperature (TGPy) is calculated by the control and evaluation device (16) as a function of the quantity of smoke (Rist) and/or the cooking chamber temperature (TGist) at which the smoke quantity (Rist) is produced.

Int. Cl.[6]: H 05 B 1/02
Offenlegungstag: 20. August 1998

FIG.1

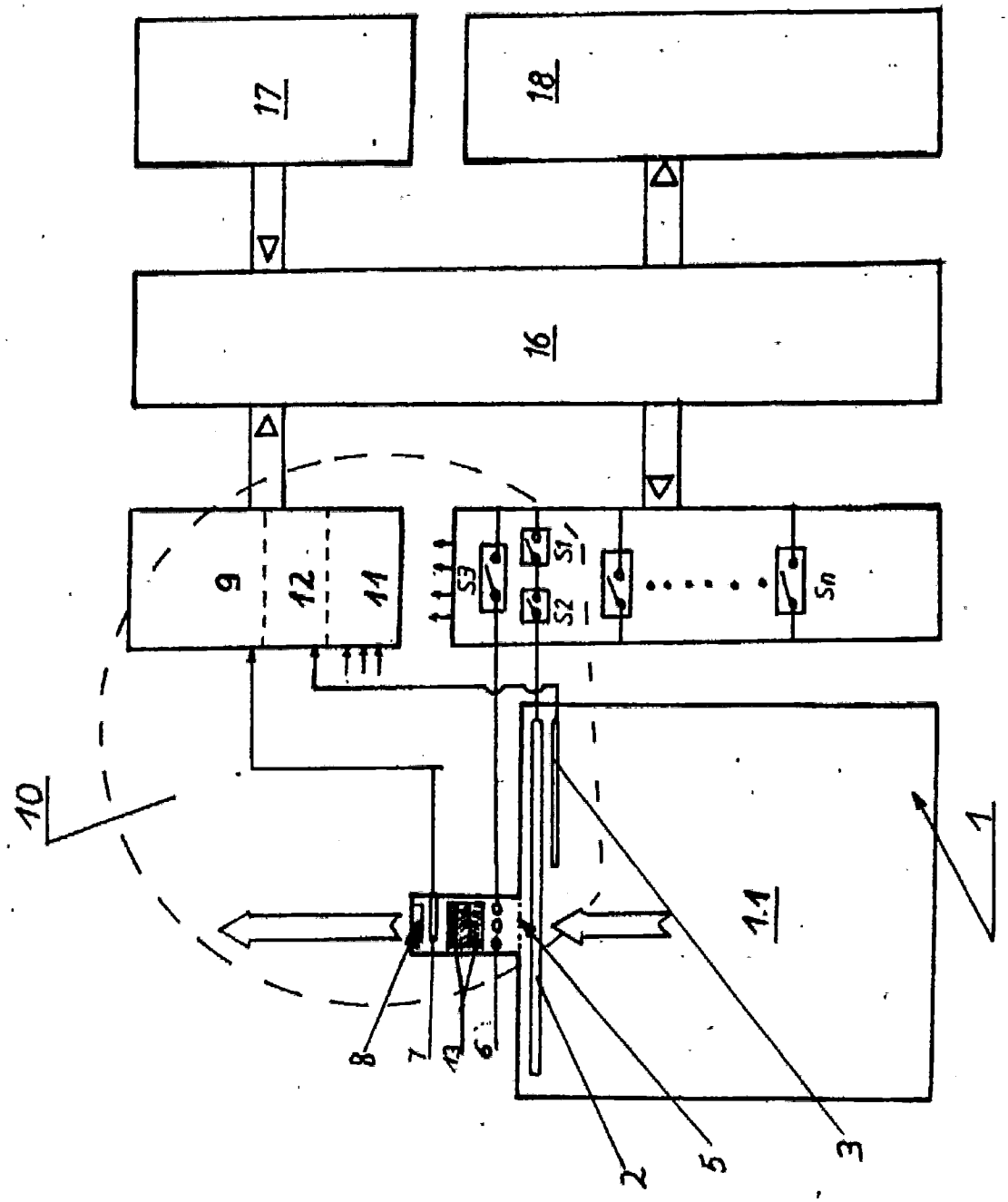

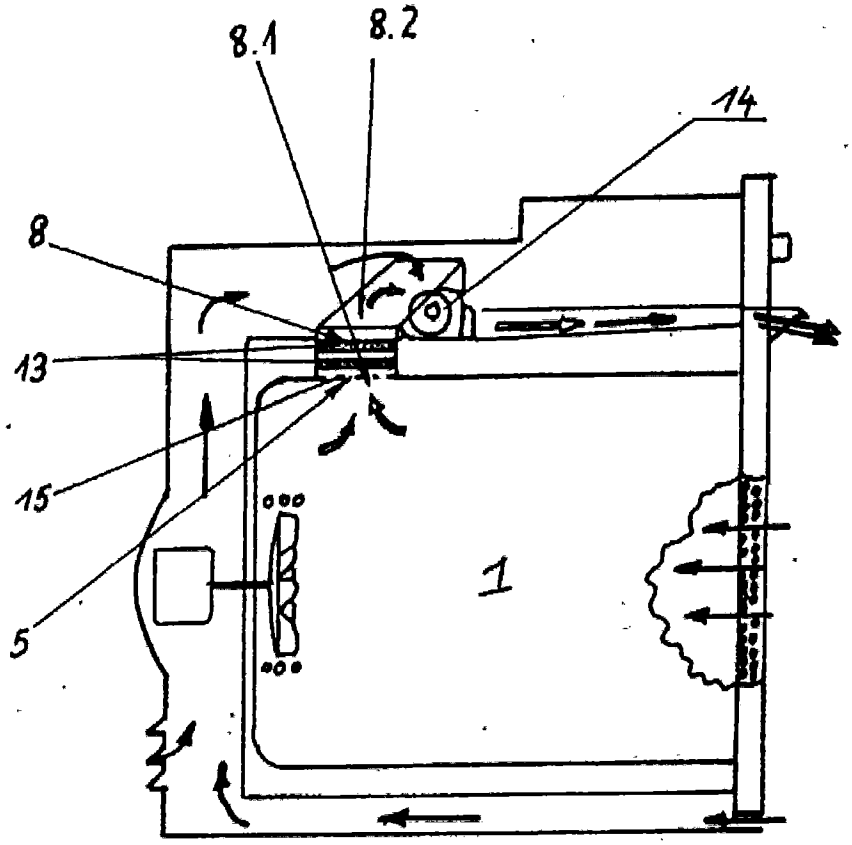

FIG. 2

TG/°C
TGpy
450
400
350
TGsoll
300
250
200
150
100
50
0
0 20 40 60 80 100 120 140 160 180 200 220
t/min

FIG. 3

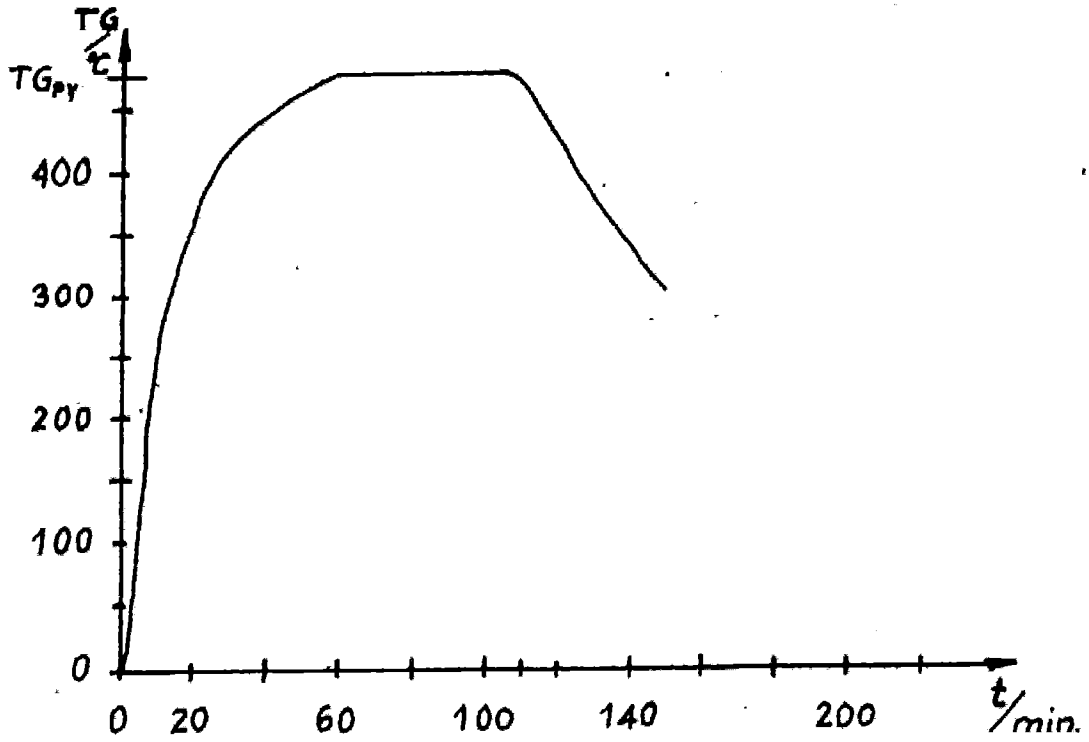
TG/°C
TGpy
400
300
200
100
0
0 20 60 100 140 200
t/min.

FIG. 4

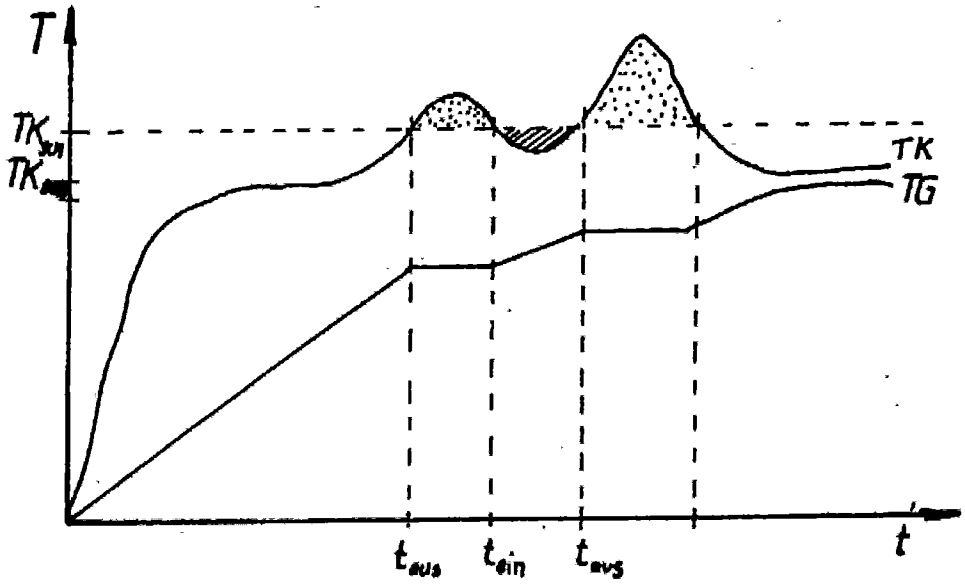

FIG. 5

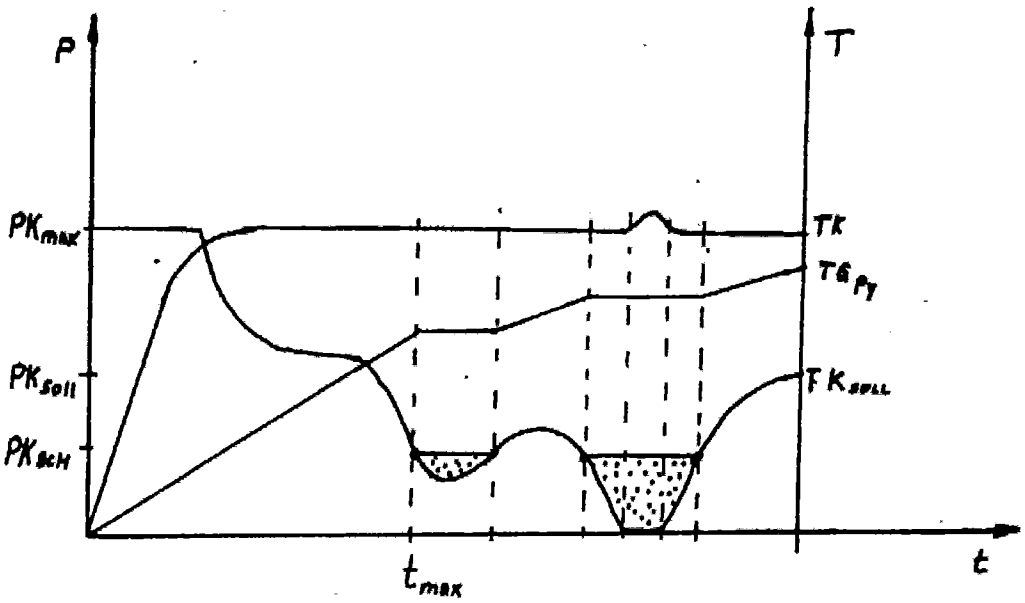

FIG. 6

(19) BUNDESREPUBLIK DEUTSCHLAND

DEUTSCHES PATENTAMT

(12) **Offenlegungsschrift**

(10) **DE 197 06 186 A 1**

(51) Int. Cl.[6]:
H 05 B 1/02
F 24 C 14/02
F 24 C 15/00

(21) Aktenzeichen: 197 06 186.9
(22) Anmeldetag: 17. 2. 97
(43) Offenlegungstag: 20. 8. 98

DE 197 06 186 A 1

(71) Anmelder:
Miele & Cie GmbH & Co, 33332 Gütersloh, DE

(72) Erfinder:
Berkenkötter, Herbert, 59302 Oelde, DE;
Krümpelmann, Thomas, Dr., 33332 Gütersloh, DE;
Rothenbacher, Helmut, 33334 Gütersloh, DE;
Sillmen, Ulrich, Dr., 33332 Gütersloh, DE

(66) Für die Beurteilung der Patentfähigkeit in Betracht zu ziehende Druckschriften:

DE	26 23 201 C2
DE	37 15 598 A1
DE	28 20 130 A1
GB	11 57 468
US	49 54 694
US	48 31 237
US	44 81 404
US	42 92 501
EP	03 80 733 A1

Die folgenden Angaben sind den vom Anmelder eingereichten Unterlagen entnommen

(54) Backofen und Verfahren zur Steuerung eines Pyrolysereinigungsvorganges

(57) Die Erfindung betrifft einen Backofen mit einem Garraum, welcher mindestens einen Heizkörper, einen Temperatursensor, eine Abluftöffnung und einen Katalysator in der Abluftöffnung aufweist, sowie mit einer elektronischen Steuer- und Auswerteeinrichtung und mit einer Einrichtung zur Pyrolysereinigung. Außerdem betrifft die Erfindung ein Verfahren zur Steuerung eines Pyrolysereinigungsvorganges.
Um einen Backofen mit einer Pyrolysereinigung so zu optimieren, daß die jeweilige Art und Menge der Verschmutzung des Garraumes die Dauer eines Pyrolysevorganges bestimmen soll und dabei maximal eine nur so große Rauchmenge am Katalysator anfallen darf, daß sie dort vollständig umgesetzt werden kann, sind dem Katalysator (8) mindestens ein Katalysatorheizkörper und ein Temperatursensor zugeordnet. Außerdem ist eine Schaltungsanordnung zur Rauchbegrenzung in Verbindung mit der elektronischen Steuer- und Auswerteeinrichtung angeordnet. Mit Beginn des Pyrolysereinigungsvorganges beginnt die Beheizung des Garraumes (1.1) und des Katalysators (8) gleichzeitig oder getrennt und die Garraum- und Katalysatortemperaturen sind separat regelbar.
Während des Pyrolysereinigungsvorganges erfolgt eine Rauchsensierung und -begrenzung im Backofen (1), wobei die am Katalysator (8) anfallende Rauchmenge als Regelgröße der Steuerung der Garraumtemperatur überlagert ist.

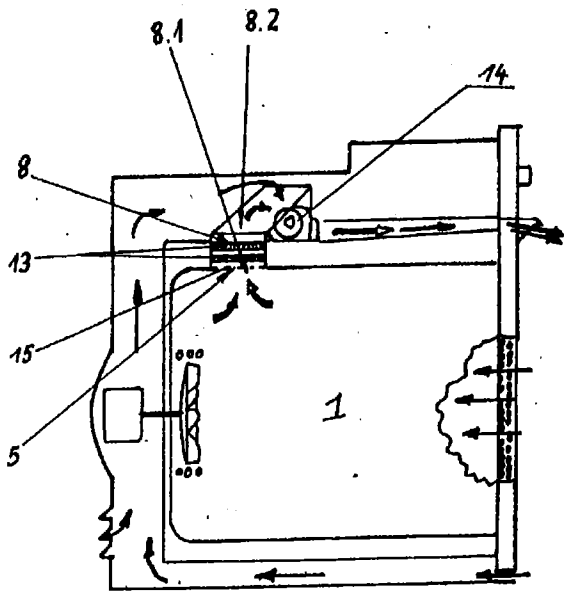

DE 197 06 186 A 1

Petitioner Ex 1003, Page 162 of 276

Beschreibung

Die Erfindung betrifft einen Backofen mit einem Garraum, welcher mindestens einen Heizkörper zum Erwärmen, einen Temperatursensor, eine Abluftöffnung und einen Katalysator in der Abluftöffnung aufweist, sowie mit einer elektronischen Steuer- und Auswerteeinrichtung und mit einer Einrichtung zur Pyrolysereinigung. Außerdem betrifft die Erfindung ein Verfahren zur Steuerung eines Pyrolysereinigungsvorganges.

Es ist allgemein bekannt, daß bei einem pyrolytischen Reinigungsvorgang Garraumverschmutzungen beseitigt werden können, ohne den Benutzer zeitlich und körperlich zu belasten. Dazu ist die Entscheidung zum Einleiten des Selbstreinigungsvorganges von unterschiedlichen Bedingungen abhängig. Neben der Möglichkeit, dem Benutzer Reinigungsbeginn und -dauer vollständig zu überlassen, werden aber seitens der Hersteller auch diverse Verfahren angeboten, dem Benutzer diese Entscheidungen weitgehend abzunehmen. Die DE-PS 30 21 427 offenbart eine von einer Zeitschaltung abhängige Einleitung der Reinigung. Das bringt jedoch den Nachteil, daß feste Reinigungszyklen abgearbeitet werden, die auch dann eine Reinigung ein leiten, wenn die Verschmutzung der Garraumwände noch keine Pyrolyse erfordern würde. Durch zu häufig durchgeführte Reinigungsvorgänge kann die Emaillierung der Garraumwände leiden und der Energieverbrauch ist unnötig hoch.

Weiterhin ist es durch die DE-PS 40 17 628 bekannt, eine objektiv begründete Einleitung des Pyrolysereinigungsvorganges durch eine Erfassung der Verschmutzungswerte und einen Grenzwertvergleich zu schaffen. In der DE-OS 41 27 388 wird als eine weitere Möglichkeit vorgeschlagen, mit elektronischen Mitteln die Pyrolyse objektiv zu begründen. Hierzu sind im Garraum Sensoren angeordnet, welche die Verschmutzungswerte erfassen und zu einer Auswerteschaltung weitergeben. Die Auswerteschaltung signaliert den Verschmutzungsgrad und empfiehlt daraufhin eine Reinigung oder führt sie durch. Diese Sensoren müssen jedoch an geeigneten Stellen im Garraum zusätzlich angeordnet und außerdem auch für die extremen Temperaturbedingungen bei einem Pyrolysevorgang geeignet sein. Weiterhin kommt negativ hinzu, daß sich die Sensoren an verschiedenen Stellen der Garraumwände befinden und daher auch unterschiedlich verschmutzt sind. Die sensierten Ergebnisse können daher nicht immer eine exakte Auskunft über den Verschmutzungszustand des Garraumes geben.

Die EP 0 537 796 offenbart einen Herd mit Pyrolysereinigung und einem Katalysator in der Abluftöffnung, welcher konstruktionsbedingt erst auf seine Betriebstemperatur gebracht werden muß, bevor er aus dem Garraum entweichenden Rauch reinigen kann. Der Katalysator hat keine eigene Heizung und kein Mittel zur Erfassung der an ihm herrschenden Temperatur.

Um die Betriebstemperatur des Katalysators zu erreichen, wird der Garraum mit maximaler Leistung seiner Heizkörper auf einen Temperaturwert hochgeheizt, bei welchem nur wenig Rauch im Garraum gebildet wird. Danach erfolgt eine Verringerung der Leistung der Heizkörper und die Garraumtemperatur wird auf diesem Temperaturwert eine feste Zeit gehalten bis sich dabei die Temperatur des Katalysators seiner Betriebstemperatur genähert hat. Das hat jedoch den Nachteil, daß je nach Abluftvolumenstrom und Garraumverschmutzung beim Leistungserhöhen der Garraumbeheizung unerwünscht hohe Katalysatortemperaturen erreicht werden oder in der festen Wartezeit die Katalysatortemperatur noch deutlich zu niedrig ist. Dadurch ist der Katalysator nicht immer in der Lage, alle Rückstände zu verbrennen. Diese gelangen dann unverbrannt an die Umgebung des Gerätes.

Der Erfindung stellt sich somit das Problem, einen Backofen derart auszugestalten, daß ein Verfahren zur Steuerung eines Pyrolysereinigungsvorganges so optimiert ablaufen kann, daß die jeweilige Art und Menge der Verschmutzung des Garraumes die Dauer eines Pyrolysevorganges bestimmen soll, wobei nur maximal eine so große Rauchmenge am Katalysator anfallen darf, daß sie dort vollständig umgesetzt werden kann. Außerdem sollen auch Fehlbeladungen während des Reinigungsvorganges erkannt werden.

Erfindungsgemäß wird dieses Problem durch einen Backofen und ein Verfahren mit in den Patentansprüchen 1 bzw. 9 angegebenen Merkmalen gelöst. Vorteilhafte Ausgestaltungen und Weiterbildungen der Erfindung ergeben sich aus den nachfolgenden Unteransprüchen.

Die mit der Erfindung erreichbaren Vorteile bestehen neben einem dem Verschmutzungsgrad angepaßten Energieverbrauch während des Reinigungsvorganges insbesondere auch darin, daß während der Aufheizphase die Rauchentwicklung im Garraum so lange gering gehalten wird, bis der Katalysator seine Betriebstemperatur erreicht hat. Der Backofen weist dazu eine Schaltung zur Rauchbegrenzung auf. Wenn zu viel Rauch entsteht, die der Katalysator aufgrund seiner noch nicht erreichten Betriebstemperatur noch nicht verarbeiten kann, wird die Garraumbeheizung ausgeschaltet oder so weit reduziert, daß die gerade aktuelle Garraumtemperatur so lange gehalten werden kann, bis der Katalysator seine Betriebstemperatur erreicht hat. Der Katalysator kann dadurch ein optimales Ergebnis liefern und wird nicht überfordert. Je größer die Verschmutzung im Garraum ist, je höher ist die am Katalysator anfallende Rauchmenge und desto öfter wird auch bereits in der Aufheizphase die Garraumbeheizung ausgeschaltet. Die Verbrennungswärme am Katalysator nimmt mit der Größe der verbrennenden Rückstände zu. Die vom Garraum nachgelieferte Wärme wird dann geringer, wenn die Verschmutzung abnimmt. Diese Feststellung wird durch den Temperaturfühler am Katalysator erfaßt und an eine elektronische Steuer- und Auswerteeinrichtung weitergegeben. Diese realisiert für jeden Reinigungsvorgang seine verschmutzungsabhängige Dauer.

Die Schaltung zur Rauchbegrenzung ist in einer vorteilhaften Ausgestaltung der Erfindung aus einer Einrichtung zur Rauchsensierung, der elektronischen Auswerteeinrichtung und mindestens einem zusätzlichen Schaltmittel zum Unterbrechen der Heizkörper zum Erwärmen des Garraumes zusammengesetzt. In einer besonders vorteilhaften Ausgestaltung werden bereits im Backofen vorhandene Bauteile als Einrichtung zur Rauchsensierung genutzt. Eine Rauchsensierung kann insbesondere durch einen eigenbeheizten und temperaturgesteuerten Katalysator in Verbindung mit seinem Temperatursensor erfolgen. Das zusätzliche Schaltmittel ist vorteilhafterweise mit einem bereits allgemein bekannten Schaltmittel zum Anfahren und Regeln der Heizkörper in Reihe geschaltet. Eine andere vorteilhafte Realisierungsvariante sieht eine Regelung für die Rauchmenge vor, die mit der Temperaturregelung des Backofens in Reihe geschaltet wird, ohne ein zusätzliches Schaltmittel zu benötigen. Ein besonderer Vorteil ergibt sich, wenn der Katalysator aus zwei hintereinander angeordneten Keramikwaben, einem Heizkörper am Katalysatoreingang und dem Temperatursensor in seiner Mitte zwischen den Keramikwaben zusammengesetzt ist. Für eine verbesserte Entlüftung des Garraumes wird im Saugweg am Katalysatorausgang ein Wrasenabsauggebläse angeordnet. Um Verpuffungen am Katalysator weitgehend auszuschließen, ist eine Anordnung eines ein- oder mehrlagigen Metallsiebes vor dem Katalysatoreingang sinnvoll. Wird in einer vorteilhaften Ausgestaltung ein Heizkörper als äußerer Heizkreis eines Unterhitze-

heizkörpers an geordnet, kann eine bessere Reinigung im Backmuffelrahmenbereich erreicht werden. Ein weiterer Vorteil ist darin zu sehen, daß anhand der Anzahl und der dazugehörigen Garraumtemperaturen der rauchmengenbedingten Abschaltungen und der Garraumbeheizung auf die Menge und die Art der Verschmutzung geschlossen werden kann. Schalten die Heizkörper im Garraum bereits in der Aufheizphase mehrmals ab, ist das ein Zeichen für verbrannte frische Fette, während ältere Verschmutzungen meistens erst während der Haltephase zum Abschalten der Heizkörper führen.

Die Dauer des Verfahrens zur Steuerung des Pyrolysereinigungsvorganges wird unter Einbeziehung der aktuellen Verschmutzungswerte des Garraumes bei jedem Reinigungsvorgang neu bestimmt. Das bedeutet, daß die Dauer an den jeweiligen Verschmutzungszustand des Garraumes angepaßt werden kann. Nach dem Beginn der Betriebsart "Pyrolyse" wird die Beheizung des Katalysators und des Garraumes gleichzeitig gestartet. Der aktuelle Verschmutzungswert des Garraumes wird anhand der Rauchentwicklung durch die Einrichtung zur Rauchsensierung ermittelt. Die zur Beseitigung der vorhandenen Verschmutzung notwendige Pyrolysedauer wird durch Zuordnung zum jeweiligen Verschmutzungswert aus einem Speicher gewählt. Der Pyrolysevorgang ist dabei in eine Aufheiz-, eine Halte- und eine Abkühlphase unterteilt.

In einer vorteilhaften Ausgestaltung des Verfahrens wird in einer elektronischen Auswerteeinheit die Katalysatorsolltemperatur oder die Katalysatorsollheizleistung zum Halten dieser Katalysatorsolltemperatur sowie Schwellwerte für die maximale Katalysatortemperatur oder die minimale Katalysatorheizleistung abgelegt, die mit einem Wert für eine vorgegebene maximale Rauchmenge korrespondieren. Im Vergleich mit den jeweils aktuell gemessenen Werten wird die am Katalysator anfallende Rauchmenge ermittelt. Wenn die gemessene Rauchmenge größer ist, als die für eine einwandfreie Arbeit des Katalysators maximal mögliche Rauchmenge, wird durch ein Schaltmittel die Garraumheizung abschaltet. Die Garraumtemperatur darf dabei so lange nicht über einen vorher festgelegten Temperaturwert ansteigen, bis die Katalysatorsolltemperatur nicht mindestens nahezu erreicht ist.

Eine weitere besondere Ausgestaltung des erfinderischen Verfahrens sieht vor, daß eine Sicherheitsabschaltung der Heizkörper zur Garraumbeheizung dann erfolgt, wenn die gewählte Garraumtemperatur nicht innerhalb einer, in der elektronischen Steuereinheit abgelegten und der jeweiligen Betriebsart zugeordneten, Zeit erreicht wird.

Ein Ausführungsbeispiel der Erfindung ist in den Zeichnungen rein schematisch dargestellt und wird nachfolgend näher beschrieben. Es zeigen:

Fig. 1 eine Prinzipskizze eines Backofens mit einer Einrichtung zur Rauchbegrenzung

Fig. 2 einen Schnitt durch eine Seitenansicht eines Backofens mit Katalysator und Wrasenabsauggebläse

Fig. 3 ein Garraumtemperatur-Zeit-Diagramm bei starker Ofenverschmutzung

Fig. 4 ein Garraumtemperatur-Zeit-Diagramm bei geringer Ofenverschmutzung

Fig. 5 ein Temperatur-Zeit-Diagramm mit Katalysator- und Garraumtemperaturverläufen

Fig. 6 ein Katalysatorheizleistungs-Zeit-Diagramm während eines Pyrolysevorganges.

Die **Fig.** 1 zeigt einen Backofen **(1)** mit einer Einrichtung zur Rauchbegrenzung **(10)**. In dem Backofen **(1)** ist mindestens ein Heizkörper **(2)** zum Erwärmen des Garraumes **(1.1)** angeordnet. Innerhalb des Garraumes **(1.1)** befinden sich weiterhin ein Temperatursensor **(3)** zur Erfassung der Garrauminnentemperatur (TG) und vorzugsweise an der Garraumdecke eine Abluftöffnung **(5)**, in welcher ein Katalysator **(8)** eingebracht ist. Der Katalysator **(8)** ist mit Heizkörpern **(6)** zur Eigenbeheizung ausgerüstet und besitzt außerdem einen Temperatursensor **(7)** zur Erfassung der Katalysatortemperatur (TK). Der Temperatursensor **(7)** ist mit einer elektronischen Auswerteeinheit **(9)** und einer Katalysatortemperaturregeleinrichtung **(11)** verbunden, welche beide Bestandteil einer elektronische Steuer- und Auswerteeinrichtung **(16)** sind. In die Steuer- und Auswerteeinrichtung **(16)** gehen weiterhin vom Benutzer an eine Bedieneinrichtung **(17)** gebene Parameter ein. Mehrere ausgewertete Signale sind vom Benutzer auswählbar, um sie dann im Anzeigendisplay **(18)** sichtbar zu machen. Zur Rauchbegrenzung, insbesondere während eines Pyrolyseverfahrens, ist ein zusätzliches Schaltmittel (S2) zum Unterbrechen der Heizkörper **(2)** in Abhängigkeit von den Katalysatortemperaturen (TK) notwendig. Dieses Schaltmittel (S2) ist in Reihe geschaltet mit einem bekannten Schaltmittel (S1) zum Anfahren und Regeln der Heizkörper **(2)**. In der elektronischen Auswerteeinheit **(9)** wird ein Katalysatorsolltemperaturwert (TK_{soll}) und ein oberer Katalysatortemperaturschwellwert (TK_{sch}) abgespeichert. Der Temperatursensor **(7)** erfaßt kontinuierlich während einer eingeschalteten Betriebsart des Backofens **(1)** die aktuell vorliegenden Katalysatortemperaturen (TK_{ist}). Diese gemessenen Werte werden an die Auswerteeinheit **(9)** weitergegeben und mit dem dort abgelegten Katalysatortemperaturschwellwert (TK_{sch}) verglichen. Dieser Temperaturschwellwert (TK_{sch}) ist vorher in Versuchen ermittelt worden und liegt außerhalb des Regelbereichs der Katalysatortemperaturregelung bei einem sauberen Backofen **(1)**. Bei Überschreiten dieses Temperaturschwellwertes (TK_{sch}) schaltet das Schaltmittel (S2) den Heizkörper **(2)** zur Beheizung des Garraumes (1. 1) aus. Ist die Katalysatortemperatur (TK_{ist}) dann wieder auf einen Wert unterhalb des Temperaturschwellwertes (TK_{sch}) gesunken, schaltet das Schaltmittel (S2) den Garraumheizkörper **(2)** wieder an. Eine derartige Regelung ist nötig, weil bei steigender Garraumtemperatur (TG) immer Fettdämpfe im Ofenraum anfallen, die am Katalysator **(8)** Verbrennungswärme erzeugen. Der Katalysator **(8)** wird dabei auf eine Temperatur (TK_{ist}) erwärmt, welche über seinem Temperaturschwellwert (TK_{sch}) liegt, obwohl die eigene Beheizung ausgeschaltet sein kann. Immer wenn nämlich der Katalysatorsolltemperaturwert (TK_{soll}) überschritten ist, schalten die Katalysatorheizkörper **(6)** ab und erst, wenn dieser Wert wieder unterschritten ist, werden die Heizkörper **(6)** wieder eingeschaltet. Dieses Ein- und Ausschalten wird so lange wiederholt, bis kein Rauch mehr am Katalysator **(8)** anfällt. Der Katalysator **(8)** wird dadurch zu einer Einrichtung zur Rauchsensierung. Eine elektronische Auswerteeinheit **(9)** übernimmt dabei in Verbindung mit dem Schaltmittel (S2) und dem Katalysator **(8)** die Funktion eines Rauchbegrenzers. Das Schaltmittel (S2) schaltet die Garraumheizkörper **(2)** bei einer Katalysatortemperatur (TK_{ist}) oberhalb des oberen Temperaturschwellwertes (TK_{sch}) ab. Sie gibt sie erst wieder frei, wenn die Katalysatortemperatur (TK_{ist}) unterhalb des Temperaturschwellwertes (TK_{sch}) gesunken ist. Das Schaltmittel (S2) liegt in Reihe mit einem Schalter (S3) zur Regelung der Katalysatortemperatur. Eine Sicherheitsabschaltung der Heizkörper **(2)** des Backofens **(1)** erfolgt außerdem auch dann, wenn die gewählte Garraumtemperatur (TG) nicht innerhalb einer, der jeweiligen Betriebsart zugeordneten Zeit (t_{max}) erreicht wird, weil dann z. B. während der Pyrolyse eventuell noch Gargut im Garraum **(1.1)** vorhanden oder ein Fehler in der Steuer- und Auswerteeinrichtung **(16)** aufgetreten sein kann.

Die **Fig.** 2 stellt einen Schnitt durch eine Seitenansicht ei-

nes Backofens (1) mit einem in der Abluftöffnung (5) des Garraumes (1.1) angeordneten Katalysator (8) dar. Der Katalysatoreingang (8.1) weist zum Garraum (1.1), während der Katalysatorausgang (8.2) zu der Saugseite eines Wrasenabsauggebläses (14) zeigt. Der Katalysator (8) besteht in diesem Beispiel aus zwei hintereinander angeordneten Keramikwaben (13) und einem Heizkörper (6) am Katalysatoreingang (8.1). In der Mitte zwischen den Keramikwaben (13) ist ein Temperatursensor (7) zur Erfassung der Katalysatortemperatur (TK_{ist}) angeordnet. Das Wrasenabsauggebläse (14) saugt am Katalysatorausgang (8.2) die gereinigte Luft an, vermischt sie mit Gerätekühlluft und bläst sie abgekühlt aus dem Backofen (1) hinaus (sh. Verlauf der Pfeile). Da es beim Verflüchtigen von Alkohol oder ähnlichen Stoffen im Garraum zu Verpuffungen am Katalysator kommen kann, ist vor dem Katalysatoreingang (8.1) ein ein- oder mehrlagiges Metallgitter (15) angeordnet. Durch diese einfache konstruktive Veränderung können Verpuffungen weitgehend eingeschränkt werden. Die Heizkörper (2) sind hier wegen einer besseren Übersicht nicht dargestellt. Wird beispielsweise zu einem Oberhitzeheizkörper auch ein Unterhitzeheizkörper und dazu noch ein zusätzlicher Heizkörper als äußerer Heizkreis angeordnet, kann dadurch eine gute Reinigung auch im Backmuffelrahmenbereich erfolgen.

Die **Fig.** 3 zeigt ein Temperatur-Zeit-Diagramm bei starker Ofenverschmutzung. Zu Beginn des Pyrolysereinigungsvorganges kann eine Beheizung des Garraumes (1.1) und des Katalysators (8) gleichzeitig oder getrennt beginnen. Die Garraumtemperaturen (TG) und Katalysatortemperaturen (TK) sind dabei separat regelbar. Während der Aufheizphase wird der Garraum (1.1) auf einen Temperaturwert (TG_{soll}) ansteigen, dann wird dieser Temperaturwert (TG_{soll}) so lange beibehalten, bis der Katalysator (8) seine Betriebstemperatur erreicht hat und steigt dann wieder an, weil der Katalysator (8) jetzt die anfallende Rauchmenge (R_{ist}) verarbeiten kann. Entsteht bei den erhöhten Garraumtemperaturen jedoch eine zu große Rauchmenge (R_{ist}), kann der Katalysator (8) nicht diese gesamte Rauchmenge (R_{ist}) verarbeiten und seine Temperatur (TK_{ist}) steigt über einen Temperaturschwellwert (TK_{sch}) an. Der Garraumheizkörper (2) wird dann entweder abgeschaltet oder so angesteuert, daß der gegenwärtige Temperaturwert so lange erhalten bleibt, bis der Katalysator (8) wieder seine Betriebstemperatur hat. Dieser Vorgang wiederholt sich so lange, bis im Garraum die Pyrolysetemperatur (TG_{Py}) erreicht ist. Dann wird die Pyrolysetemperatur (TG_{py}) gehalten bis keine Rauchmenge (R_{ist}) mehr durch den Katalysator (8) sensiert wird. Anschließend schaltet die elektronische Steuer- und Auswerteeinrichtung (16) den oder die Garraumheizkörper (2) ab und die Abkühlphase beginnt. Während der Abkühlphase ist es sinnvoll, eine in den Figuren nicht gezeigte Verschlußeinrichtung der Backofentür zum Schutz für den Benutzer so lange zu aktivieren, bis die Garraumtemperaturen (TG_{ist}) auf ca. 300°C gesunken sind.

In der **Fig.** 4 ist ein Garraumtemperatur-Zeit-Diagramm bei geringer Ofenverschmutzung dargestellt. Durch die geringe Verschmutzung entsteht nur wenig Rauch bei der Aufheizung des Garraumes (1.1). Die Garraumtemperatur (TG) steigt bis auf den Temperaturwert (TG_{Py}) zur Durchführung der pyrolytischen Reinigung an. Dabei braucht sie zwischenzeitlich nicht auf einem Temperaturschwellwert (TG_{sch}) gehalten zu werden, damit der Katalysator (8) seinen Temperaturschwellwert (TK_{sch}) erreichen kann, weil nur wenig Rauch bei der Pyrolysereinigung anfällt und daher keine Überlastung des Katalysators (8) stattfindet.

Die **Fig.** 5 zeigt ein Temperatur-Zeit-Diagramm mit den Katalysator- (obere Kurve) und Garraumtemperaturverläufen (untere Kurve) während der Durchführung eines Pyrolysevorganges. In der Auswerteeinrichtung (9) als Bestandteil der elektronischen Steuer- und Auswerteeinrichtung (16) wird eine Katalysatorsolltemperatur (TK_{soll}) und ein oberer Katalysatortemperaturschwellwert (TK_{sch}) abgespeichert. Bis zu diesem Katalysatortemperaturschwellwert (TK_{sch}) kann noch eine maximal mögliche Rauchmenge (R_{max}) durch den Katalysator verarbeitet werden. Der Temperatursensor (7) erfaßt während einer eingeschalteten Betriebsart, insbesondere auch bei der Durchführung eines Pyrolysereinigungsvorganges, die aktuelle Katalysatortemperatur (TK_{ist}). Diese Temperaturwerte (TK_{ist}) werden weitergegeben an die Analyseeinrichtung (9) und dort mit dem abgelegten Katalysatortemperaturschwellwert (TK_{sch}) verglichen. Sind die aktuellen Katalysatortemperaturen (TK_{ist}) größer als der Katalysatortemperaturschwellwert (TK_{sch}), schaltet das Schaltmittel (S2) die Backofenheizung zeitweilig ab oder hält die Garraumtemperatur (TG) auf einem erreichten Temperaturwert, bis die Katalysatortemperaturen (TK_{ist}) wieder unter den Katalysatortemperaturschwellwert (TK_{sch}) gesunken sind (gepunktete Bereiche zeigen die Bereiche, in denen die maximal verarbeitbare Rauchmenge (R_{max}) überschritten wird). Der Katalysatorheizkörper (6) wird durch die elektronische Steuer- und Auswerteeinrichtung (16) abgeschaltet, wenn die aktuellen Katalysatortemperaturen (TK_{ist}) über den Katalysatortemperatursollwert (TK_{soll}) angestiegen sind. Wenn der Katalysatortemperatursollwert (TK_{soll}) wieder unterschritten ist, wird der Katalysatorheizkörper (6) wieder eingeschaltet (gestrichelter Bereich). In der elektronischen Steuer- und Auswerteeinrichtung (16) sind die Katalysatorsolltemperatur (TK_{soll}) oder die Katalysatorsollheizleistung (PK_{soll}) zum Halten der Katalysatorsolltemperatur (TK_{soll}) sowie eine Katalysatorschwelltemperatur (TK_{sch}) und/oder eine Katalysatorschwellheizleistung (PK_{sch}) abgelegt, welche mit einem Wert für eine vorgegebene Rauch menge (R_{max}) korrespondieren. Im Vergleich mit den jeweils aktuell gemessenen Werten (TK_{ist}, PK_{ist}) wird daraus eine am Katalysator (8) anfallende Rauchmenge (R_{ist}) ermittelt. Ist die aktuelle Rauchmenge (R_{ist}) größer als die maximal durch den Katalysator (8) sinnvoll zu verarbeitende Rauch menge (R_{max}) wird ein weiterer Anstieg der Garraumtemperatur (TG_{ist}) verhindert. Dabei wird die Garraumtemperatur (TG_{ist}) um einen in der Steuer- und Auswerteeinrichtung (16) abgelegten Wert reduziert und gehalten oder das Schaltmittel (S2) schaltet den Backofenheizkörper ab. Wird die aktuelle Rauchmenge (R_{ist}) wieder kleiner als die am Katalysator maximal möglich zu verarbeitende Rauchmenge (R_{max}), schaltet das Schaltmittel (S2) die Backofenheizkörper (2) wieder ein.

In der **Fig.** 6 ist ein Diagramm der Katalysatorheizleistung (PK) während der Zeit eines Pyrolysevorganges dargestellt. Das Verfahren zur Rauchbegrenzung kann zur Bestimmung der momentan am Katalysator (8) anfallenden Gas- bzw. Rauch menge (R_{ist}) auch die momentane Katalysatorheizleistung oder ein indirektes Maß dafür verwenden. Als indirektes Maß kann beispielsweise das Verhältnis der Einschalt- zur Ausschaltzeit der Katalysatorheizkörper (6) dienen. In der Katalysatortemperaturregeleinheit (11) ist die Katalysatorheizleistung (PK) zum Halten der Katalysatorsolltemperatur (TK_{soll}) eingegeben. Diese Heizleistung kann während des Betriebes aktualisiert werden. Dazu wird bei einer Garraumtemperatur (TG) jeweils die größte notwendige Heizleistung (P) den Verhältnissen eines leeren Garraumes zugeordnet. Fallen brennbare Gase am Katalysator (8) an, reduziert das seine aufzubringende elektrische Heizenergie. Ein Heizleistungsschwellwert (PK_{sch}) für die Katalysatorheizleistung (PK) liegt deutlich unter dem vorgegebenen Wert für einen sauberen Backofen (1). Bei Un-

terschreitung des Schwellwertes (PK_{sch}) schaltet das Schaltmittel (S2) die Garraumheizkörper (2) aus, bei Überschreitung des Schwellwertes (PK_{sch}) schaltet das Schaltmittel (S2) die Garraumheizkörper (2) wieder ein. Die Einbeziehung der Katalysatorheizleistung (PK) in das Verfahren zur Rauchbegrenzung in einem Backofen (1) ist sogar noch empfindlicher als das Verfahren unter Berücksichtigung des oberen Temperaturschwellwertes (TK_{sch}) für den Katalysator (8) und daher noch besser zur Rauchbegrenzung am Katalysator (8) geeignet. Bei dem Temperaturschwellverfahren (s. **Fig.** 5) muß gewartet werden, bis die elektrische Katalysatorbeheizung auf Null reduziert wurde. Wenn Katalysatortemperatur (TK_{ist}) deutlich über der Katalysatorsolltemperatur (TK_{soll}) liegt, werden die Heizkörper (2) ausgeschaltet. Bei Überwachung der Katalysatorheizleistung kann dagegen schon bei jeder vorgebbaren Reduzierung der zur Aufrechterhaltung der Katalysatortemperatur (TK) notwendigen Heizleistung auf die Garraumheizkörper (2) rückgewirkt werden.

Patentansprüche

1. Backofen mit einem Garraum, welcher mindestens einen Heizkörper zum Erwärmen, einen Temperatursensor, eine Abluftöffnung und einen Katalysator in der oder in Verbindung mit der Abluftöffnung aufweist, sowie mit einer elektronischen Steuer- und Auswerteeinrichtung und mit einer Einrichtung zur Pyrolysereinigung, **dadurch gekennzeichnet**,
daß dem Katalysator (8) mindestens ein Katalysatorheizkörper (6) und ein Temperatursensor (7) zugeordnet sind und
daß eine Schaltungsanordnung (10) zur Rauchbegrenzung in Verbindung mit der elektronischen Steuer- und Auswerteeinrichtung (16) angeordnet ist.

2. Backofen nach Anspruch 1, dadurch gekennzeichnet, daß die Schaltung (10) zur Rauchbegrenzung eine Einrichtung zur Rauchsensierung (7, 8), eine elektronische Auswerteeinrichtung (9) zur Steuerung der Heizkörper (2) und mindestens ein Schaltmittel (S2) zum Abschalten der Heizkörper (6) aufweist.

3. Backofen nach mindestens einem der vorgenannten Ansprüche 1 oder 2, dadurch gekennzeichnet, daß die Einrichtung zur Rauchsensierung aus dem temperaturgesteuerten Katalysator (8) und dem Temperatursensor (7) zusammengesetzt ist.

4. Backofen nach mindestens einem der vorgenannten Ansprüche 1 bis 3, dadurch gekennzeichnet, daß die Auswerteeinrichtung (9) und/oder eine Katalysatortemperaturregeleinrichtung (11) und/oder eine Garraumtemperaturregeleinheit (12) Bestandteile der elektronischen Steuer- und Auswerteeinrichtung (16) sind.

5. Backofen nach mindestens einem der vorgenannten Ansprüche 1 bis 4, dadurch gekennzeichnet, daß der Katalysator (8) zwei hintereinander angeordnete Keramikwaben (13) aufweist, wobei der Katalysatorheizkörper (6) am Katalysatoreingang (8.1) und der Temperatursensor (7) mittig zwischen den Keramikwaben (13) angeordnet sind.

6. Backofen nach Anspruch 5, dadurch gekennzeichnet, daß ein ein- oder mehrlagiges Metallsieb (15) vor dem Katalysatoreingang (8.1) angeordnet ist.

7. Backofen nach mindestens einem der vorgenannten Ansprüche 1 bis 6, dadurch gekennzeichnet, daß am Katalysatorausgang (8.2) ein Wrasenabsauggebläse (14) angeordnet ist.

8. Backofen nach mindestens einem der vorgenannten Ansprüche 1 bis 7, dadurch gekennzeichnet, daß das Schaltmittel (S2) mit einem Schaltmittel (S1) zum Anfahren und Regeln der Heizkörper (2) in Reihe geschaltet ist.

9. Verfahren zur Steuerung eines Pyrolysereinigungsvorganges in einem Backofen nach mindestens einem der Ansprüche 1 bis 8, dadurch gekennzeichnet, daß mit Beginn des Pyrolysereinigungsvorganges eine Beheizung des Garraumes (1.1) und des Katalysators (8) gleichzeitig oder getrennt beginnen, wobei Garraumtemperaturen (TG) und Katalysatortemperaturen (TK) separat regelbar sind und daß während des Pyrolysereinigungsvorganges eine Rauchsensierung und Rauchbegrenzung im Backofen (1) erfolgt, wobei die am Katalysator (8) anfallende Rauchmenge (R_{ist}) als Regelgröße der Steuerung der Garraumtemperatur (TG_{ist}) überlagert ist.

10. Verfahren nach Anspruch 9, dadurch gekennzeichnet, daß vor Beginn des Pyrolysereinigungsvorganges ein maximaler Temperaturwert (TG_{max}) für den Garraum definiert wird, welcher unterhalb der Pyrolysetemperatur (TG_{Py}) liegt und bei beheiztem, aber nicht seine Solltemperatur (TK_{soll}) aufweisenden Katalysator (8) maximal erreichbar sein soll und daß dieser Temperaturwert (TG_{max}) in der elektronischen Steuer- und Auswerteeinrichtung (16) gespeichert wird und daß nach dem Start des Pyrolysereinigungsvorganges der Garraum. (1.1) zuerst nur bis zu dem Temperaturwert (TG_{max}) aufgeheizt wird, dieser Temperaturwert (TG_{max}) so lange gehalten wird, bis der Katalysator seine Solltemperatur (TK_{soll}) erreicht hat und erst dann bis zum Erreichen der Pyrolysetemperatur (TG_{Py}) gesteigert wird.

11. Verfahren nach mindestens einem der Ansprüche 9 oder 10, dadurch gekennzeichnet, daß in der elektronischen Steuer- und Auswerteeinrichtung (16) zu der jeweiligen Rauchmenge (R_{ist}) und/oder Art der Verschmutzung des Garraumes (1.1) eine notwendige Pyrolysedauer gespeichert und realisiert wird, wobei die jeweils aktuelle Rauchmenge (R_{ist}) durch eine Einrichtung zur Rauchsensierung (10) ermittelt wird und auf die Art der Verschmutzung hinweist.

12. Verfahren nach mindestens einem der Ansprüche 9 bis 11, dadurch gekennzeichnet, daß in der elektronischen Steuer- und Auswerteeinrichtung (16) die Katalysatorsolltemperatur (TK_{soll}) oder die Katalysatorsollheizleistung (PK_{soll}) zum Halten der Katalysatorsolltemperatur (TK_{soll}) sowie eine Katalysatorschwelltemperatur (TK_{sch}) und/oder eine Katalysatorschwellheizleistung (PK_{sch}) abgelegt sind, welche mit einem Wert für eine vorgegebene Rauchmenge (R_{max}) korrespondieren und daß im Vergleich mit den jeweils aktuell gemessenen Werten (TK_{ist}, PK_{ist}) daraus eine am Katalysator (8) anfallende Rauchmenge (R_{ist}) ermittelt wird und daß beim Erreichen (R_{ist}) > (R_{max}) ein weiterer Anstieg der Garraumtemperatur (TG_{ist}) verhindert wird, wobei die Garraumtemperatur (TG_{ist}) um einen in der Steuer- und Auswerteeinrichtung (16) abgelegten Wert reduziert und gehalten wird oder das Schaltmittel (S2) den Backofenheizkörper abschaltet und daß beim Erreichen (R_{ist}) < (R_{max}) das Schaltmittel (S2) die Backofenheizkörper wieder einschaltet.

13. Verfahren nach mindestens einem der Ansprüche 9 bis 12, dadurch gekennzeichnet, daß die Garraumtemperatur (TG_{ist}) einen vorbestimmbaren Wert (TG_{max}) nicht überschreitet, bis die Katalysatorsolltemperatur (TK_{soll}) nicht mindestens nahezu erreicht ist.

14. Verfahren nach mindestens einem der Ansprüche 9 bis 13, dadurch gekennzeichnet, daß eine Sicherheits-

abschaltung des Backofens (**1**) erfolgt, wenn die gewählte Garraumtemperatur (TG) nicht innerhalb einer, der jeweiligen Betriebsart zugeordneten Zeit (t_{max}) erreicht wird.

15. Verfahren nach mindestens einem der Ansprüche 9 bis 14, dadurch gekennzeichnet, daß die Pyrolysetemperatur (TG_{Py}) in Abhängigkeit von der Rauchmenge (R_{ist}) und/oder der Garraumtemperatur (TG_{ist}), bei welcher die Rauchmenge (R_{ist}) entsteht, von der Steuer- und Auswerteeinrichtung (**16**) errechnet wird.

Hierzu 4 Seite(n) Zeichnungen

Nummer: DE 197 06 186 A1
Int. Cl.[6]: H 05 B 1/02
Offenlegungstag: 20. August 1998

FIG.1

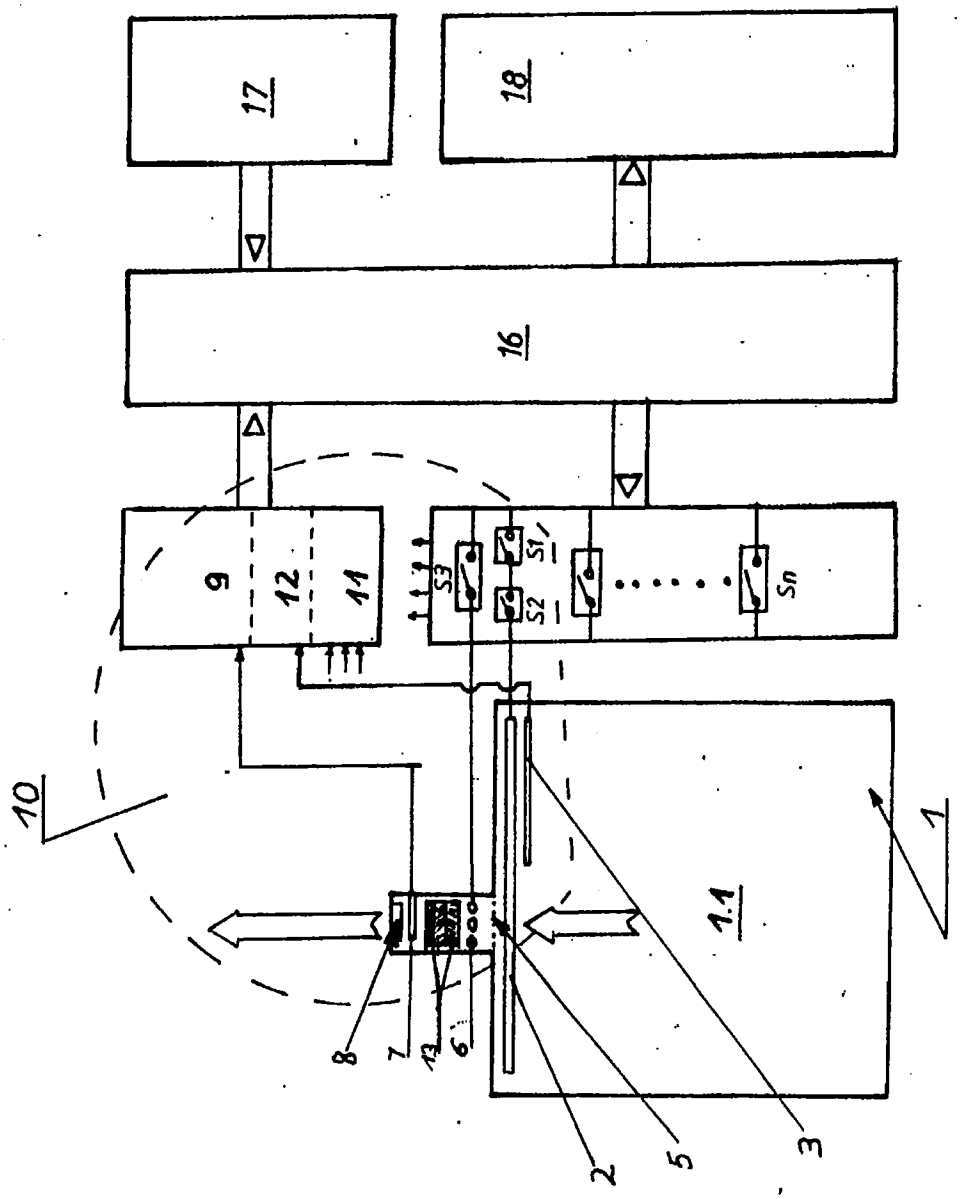

802 034/425

Nummer: DE 197 06 186 A1
Int. Cl.[6]: H 05 B 1/02
Offenlegungstag: 20. August 1998

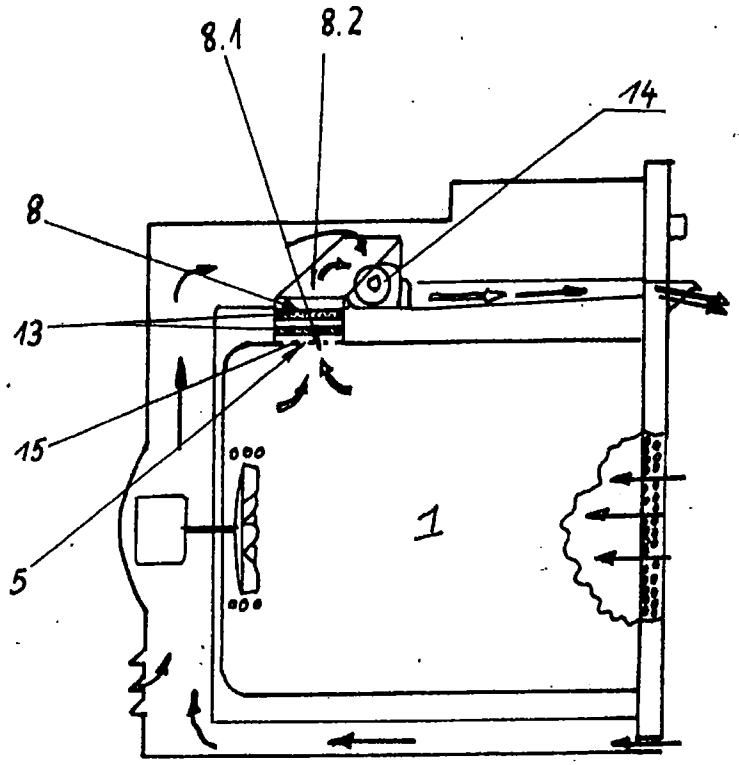

FIG.2

Nummer: DE 197 06 186 A1
Int. Cl.[6]: H 05 B 1/02
Offenlegungstag: 20. August 1998

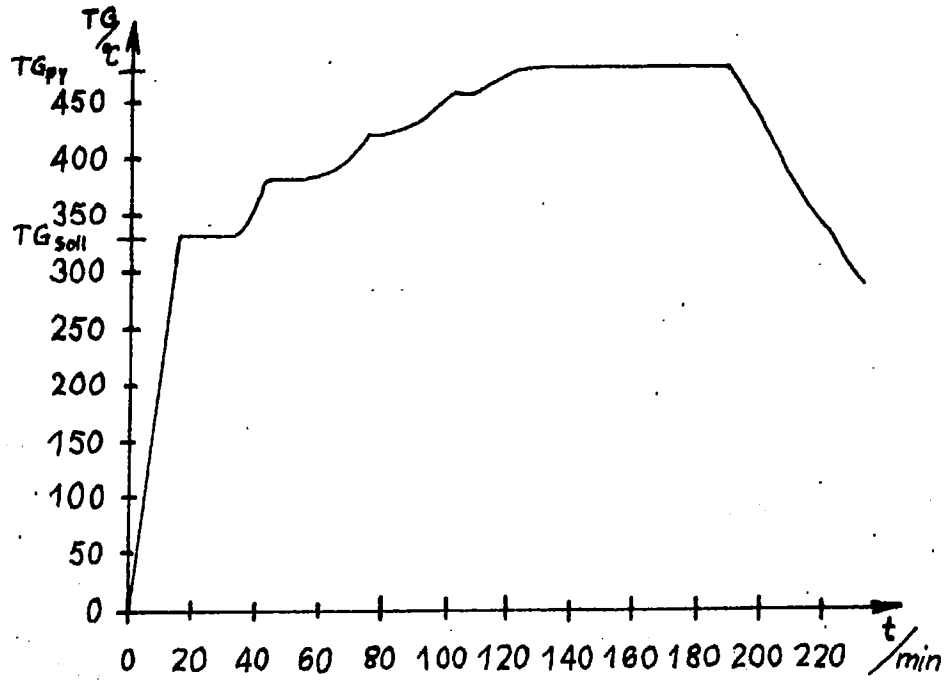

FIG. 3

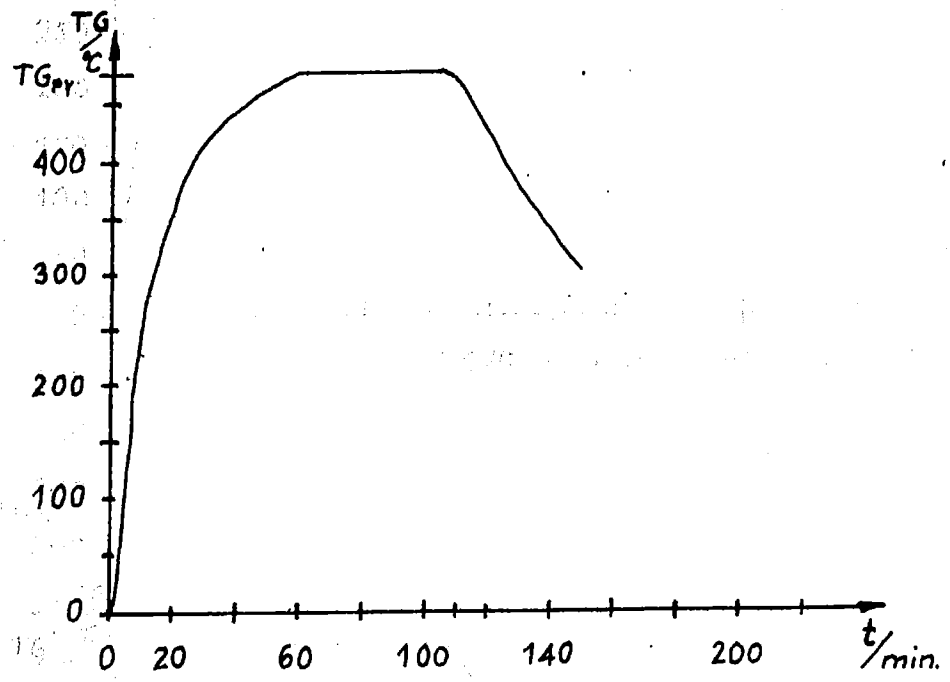

FIG. 4

Nummer: DE 197 06 186 A1
Int. Cl.[6]: H 05 B 1/02
Offenlegungstag: 20. August 1998

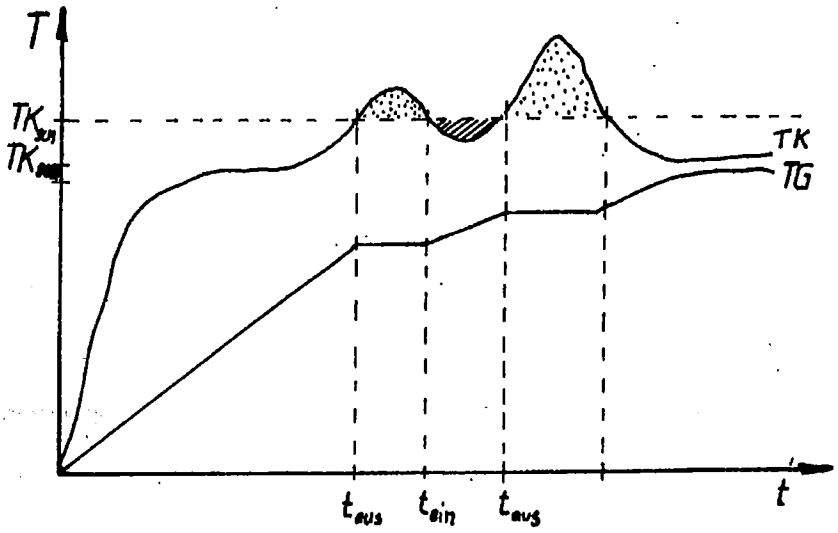

FIG. 5

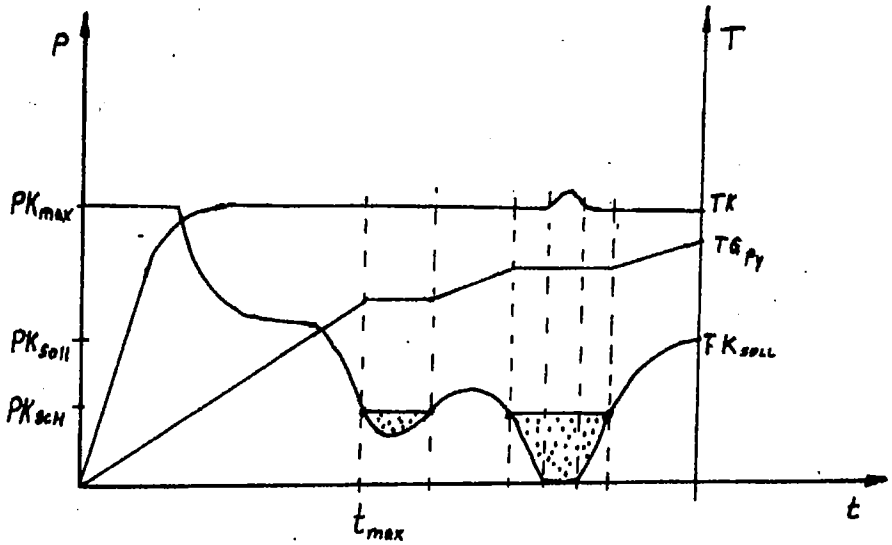

FIG. 6

Electronic Acknowledgement Receipt

EFS ID:	45524803
Application Number:	17691628
International Application Number:	
Confirmation Number:	4539
Title of Invention:	MULTIPLE LINKED APPLIANCE WITH AUXILIARY OUTLET
First Named Inventor/Applicant Name:	Gregory Allan Thomas Hall
Customer Number:	7733
Filer:	Ralph E. Jocke/Allison McDermott
Filer Authorized By:	Ralph E. Jocke
Attorney Docket Number:	INT-1001 CIP 2 C 4
Receipt Date:	26-APR-2022
Filing Date:	10-MAR-2022
Time Stamp:	16:21:50
Application Type:	Utility under 35 USC 111(a)

Payment information:

Submitted with Payment	no

File Listing:

Document Number	Document Description	File Name	File Size(Bytes)/ Message Digest	Multi Part /.zip	Pages (if appl.)
1	Information Disclosure Statement (IDS) Form (SB08)	IDS.pdf	1263499 cf2ace5fc57d27168f28ddc224fc340a069e0df6	no	4

Warnings:

Information:					
2	Foreign Reference	DE4243004_English_included.pdf	440924 f4cb4a16f086cd286162e7cdedd0585e01d93b54	no	12
Warnings:					
Information:					
3	Foreign Reference	DE19706186_English_included.pdf	1303086 5de95a55f9fd00bd1102515be6d628d8f296ae44	no	24
Warnings:					
Information:					
			Total Files Size (in bytes):	3007509	

This Acknowledgement Receipt evidences receipt on the noted date by the USPTO of the indicated documents, characterized by the applicant, and including page counts, where applicable. It serves as evidence of receipt similar to a Post Card, as described in MPEP 503.

New Applications Under 35 U.S.C. 111
If a new application is being filed and the application includes the necessary components for a filing date (see 37 CFR 1.53(b)-(d) and MPEP 506), a Filing Receipt (37 CFR 1.54) will be issued in due course and the date shown on this Acknowledgement Receipt will establish the filing date of the application.
National Stage of an International Application under 35 U.S.C. 371
If a timely submission to enter the national stage of an international application is compliant with the conditions of 35 U.S.C. 371 and other applicable requirements a Form PCT/DO/EO/903 indicating acceptance of the application as a national stage submission under 35 U.S.C. 371 will be issued in addition to the Filing Receipt, in due course.
New International Application Filed with the USPTO as a Receiving Office
If a new international application is being filed and the international application includes the necessary components for an international filing date (see PCT Article 11 and MPEP 1810), a Notification of the International Application Number and of the International Filing Date (Form PCT/RO/105) will be issued in due course, subject to prescriptions concerning national security, and the date shown on this Acknowledgement Receipt will establish the international filing date of the application.

UNITED STATES PATENT AND TRADEMARK OFFICE

UNITED STATES DEPARTMENT OF COMMERCE
United States Patent and Trademark Office
Address: COMMISSIONER FOR PATENTS
P.O. Box 1450
Alexandria, Virginia 22313-1450
www.uspto.gov

APPLICATION NUMBER	FILING OR 371(C) DATE	FIRST NAMED APPLICANT	ATTY. DOCKET NO./TITLE
17/691,628	03/10/2022	Gregory Allan Thomas Hall	INT-1001 CIP 2 C 4

CONFIRMATION NO. 4539

PUBLICATION NOTICE

7733
WALKER & JOCKE
231 SOUTH BROADWAY STREET
MEDINA, OH 44256

OC000000134706008

Title:MULTIPLE LINKED APPLIANCE WITH AUXILIARY OUTLET

Publication No.US-2022-0196319-A1
Publication Date:06/23/2022

NOTICE OF PUBLICATION OF APPLICATION

The above-identified application will be electronically published as a patent application publication pursuant to 37 CFR 1.211, et seq. The patent application publication number and publication date are set forth above.

The publication may be accessed through the USPTO's publically available Searchable Databases via the Internet at www.uspto.gov. The direct link to access the publication is currently http://www.uspto.gov/patft/.

The publication process established by the Office does not provide for mailing a copy of the publication to applicant. A copy of the publication may be obtained from the Office upon payment of the appropriate fee set forth in 37 CFR 1.19(a)(1). Orders for copies of patent application publications are handled by the USPTO's Public Records Division. The Public Records Division can be reached by telephone at (571) 272-3150 or (800) 972-6382, by facsimile at (571) 273-3250, by mail addressed to the United States Patent and Trademark Office, Public Records Division, Alexandria, VA 22313-1450 or via the Internet.

In addition, information on the status of the application, including the mailing date of Office actions and the dates of receipt of correspondence filed in the Office, may also be accessed via the Internet through the Patent Electronic Business Center at www.uspto.gov using the public side of the Patent Application Information and Retrieval (PAIR) system. The direct link to access this status information is currently https://portal.uspto.gov/pair/PublicPair. Prior to publication, such status information is confidential and may only be obtained by applicant using the private side of PAIR.

Further assistance in electronically accessing the publication, or about PAIR, is available by calling the Patent Electronic Business Center at 1-866-217-9197.

Office of Data Managment, Application Assistance Unit (571) 272-4000, or (571) 272-4200, or 1-888-786-0101

IN THE UNITED STATES PATENT AND TRADEMARK OFFICE

First Named Inventor:		)	
	Gregory Allan Thomas Hall	)	
		)	**Art Unit 3761**
Serial No.:	**17/691,628**	)	
		)	**Primary Examiner**
		)	**Hung D. Nguyen**
Filed:	**March 10, 2022**	)	
		)	
		)	
Conf.	**4539**	)	

Title: Multiple Linked Appliance With Auxiliary Outlet

Commissioner for Patents
P.O. Box 1450
Alexandria, VA 22313-1450

Second Preliminary Amendment

Sir:

Kindly amend the above-identified Application prior to examination as follows:

Amendments to the claims begin on page 2 hereof.

Remarks begin on page 13.

In the Claims

Kindly amend the claims as follows:

1. (original) Apparatus comprising:

a microwave oven, wherein the microwave oven includes

a magnetron, wherein the magnetron is configured to cook items in a cooking area within the microwave oven,

a smoke sensor, wherein the smoke sensor is positioned in operative connection with the cooking area,

a power cord, wherein the power cord is configured to be releasably connected to a source of electrical power,

at least one externally accessible electrical connector, wherein each electrical connector is configured to deliver electrical power that is received through the power cord through the respective electrical connector to a respective electrically powered device that is outside of the microwave oven,

at least one power control circuit, wherein the at least one power control circuit is in operative electrical connection with each of the power cord, the at least one electrical connector, the magnetron, and the smoke sensor,

wherein responsive at least in part to a level of smoke sensed by the smoke sensor, the at least one power control circuit is operative to cause cooking power

to the magnetron to be withdrawn to end a current cooking session prior to a set end time of the current cooking session,

wherein after the current cooking session has been caused to end prior to the set end time based on the sensed level of smoke, the at least one power control circuit is operative thereafter to enable the magnetron to receive cooking power in a next subsequent cooking session.

2. (original) The apparatus according to claim 1

wherein the at least one power control circuit is operative to cause electrical power to be unavailable to the at least one electrical connector during at least a portion of the time that the magnetron is operative.

3. (original) The apparatus according to claim 1

wherein the at least one electrical connector comprises an electric outlet configured to releasably receive a plug in electrical connection therewith,

wherein the at least one power control circuit is operative to cause electrical power to be unavailable to the electric outlet during at least a portion of the time that the magnetron is operative.

4. (original) The apparatus according to claim 1

wherein the at least one electrical connector includes a USB port,

wherein the at least one power control circuit is operative to cause electrical power to be unavailable to the USB port during at least a portion of the time that the magnetron is operative.

5. (previously presented) The apparatus according to claim 1

wherein the smoke sensor includes at least one of

a radiation emitter and radiation receiver,

a photosensor,

a motion sensor,

an ionization sensor, and

a VOC sensor.

6. (original) The apparatus according to claim 1

wherein the at least one electrical connector comprises an electric outlet configured to releasably receive a plug of a refrigerator in electrical connection therewith,

wherein the at least one power control circuit is operative to cause electrical power to be unavailable to the electric outlet during at least a portion of the time that the magnetron is operative.

7. (original) The apparatus according to claim 1

wherein the power cord comprises a single power cord,

wherein the at least one electrical connector includes

an electric outlet, and

a USB port.

8. (currently amended) The apparatus according to claim 1

wherein the power cord comprises a single power cord,

wherein the at least one electrical connector includes <u>at least one of</u>

an electric outlet, and

a USB port,

wherein the at least one power control circuit is operative to cause electrical power to be unavailable to <u>at least one of</u> the electric outlet and the USB port during at least a portion of the time that the magnetron is operative.

9. (original) The apparatus according to claim 1

wherein the at least one power control circuit is operative to cause electrical power to be unavailable to the at least one electrical connector during at least a portion of the time that the magnetron is operative, and for a predetermined time period after electrical power becomes unavailable to the at least one electrical connector.

10. (original) The apparatus according to claim 1

wherein the at least one power control circuit is operative to cause cooking power to the magnetron to be withdrawn to end the cooking session responsive at least in part to sensing the level of smoke continuously for a predetermined time.

11. (previously presented) The apparatus according to claim 1

wherein the microwave oven includes a front side and a back side,

wherein the front side includes a control panel, an opening and a movable door, wherein in an open position of the door, the cooking area is accessible from outside the microwave oven,

wherein the power cord comprises a single power cord,

wherein the at least one electrical connector includes

an electric outlet on the back side.

12. (currently amended) The apparatus according to claim 1

wherein the microwave oven includes a front side in a back side,

wherein the front side includes a control panel, an opening and a movable door, wherein in an open position of the door the cooking area is accessible from outside the microwave oven,

wherein the power cord comprises a single power cord,

wherein the at least one electrical connector includes

an electric outlet on the back side, and

a USB port on the front side,

wherein the at least one power control circuit is operative to cause electrical power to be unavailable to <u>at least one</u> the electric outlet and the USB port during at least a portion of the time that the magnetron is operative.

13. (original) The apparatus according to claim 1

and further comprising:

a refrigerator, wherein the refrigerator is electrically connected to the at least one externally accessible electrical connector,

wherein the at least one power control circuit is operative to cause electrical power to be unavailable to the refrigerator during at least a portion of the time that the magnetron is operative.

14. (previously presented) Apparatus comprising:

a microwave oven, wherein the microwave oven includes

a cooking area within the microwave oven,

a magnetron, wherein the magnetron is configured to cook items in the cooking area,

at least one smoke sensor, wherein the smoke sensor is positioned in operative connection with the cooking area,

at least one externally accessible electrical connector, wherein each electrical connector is configured to deliver electrical power from the microwave oven,

at least one power control circuit, wherein the at least one power control circuit is in operative electrical connection with the magnetron, the at least one smoke sensor, and the at least one electrical connector,

wherein responsive at least in part to a level of smoke sensed by the at least one smoke sensor during a cooking session, the at least one power control circuit is operative to cause power to the magnetron to be withdrawn to end the cooking session prior to a set end time,

wherein after the cooking session has been caused the end based on the sensed level of smoke, the at least one power control circuit is operative thereafter to enable the magnetron to receive power to commence a next subsequent cooking session.

15. (previously presented) The apparatus according to claim 14

wherein the at least one power control circuit is operative to cause power to be unavailable from the at least one electrical connector when cooking power is delivered to the magnetron.

16. (currently amended) The apparatus according to claim 14

wherein the at least one electrical connector comprises an electric outlet configured to deliver household current and to releasably receive a ~~a~~ plug in electrical connection therewith.

17. (original) The apparatus according to claim 14

wherein the at least one electrical connector comprises a USB port.

18. (original) The apparatus according to claim 14

wherein the at least one electrical connector comprises

an electric outlet configured to deliver household current, and

a USB port,

wherein the at least one power control circuit is operative to cause electrical power to not be deliverable from each of the electric socket and the USB port when cooking power is delivered to the magnetron.

19. (previously presented) The apparatus according to claim 14

and further comprising:

at least one of

a refrigerator, and

a safe,

wherein the at least one of the refrigerator and the safe is in operative electrical connection with the at least one power control circuit.

20. (original) Apparatus comprising:

a microwave oven, wherein the microwave oven includes

a cooking area within the microwave oven,

a magnetron, wherein the magnetron is configured to cook items positioned in the cooking area,

at least one smoke sensor, wherein the at least one smoke sensor is positioned in operative connection with the cooking area,

at least one power control circuit, wherein the at least one power control circuit is in operative connection with each of the magnetron and the at least one smoke sensor,

wherein the at least one power control circuit is operative to cause

responsive at least in part to a level of smoke sensed by the at least one smoke sensor, cooking power being currently delivered to the magnetron to be withdrawn whereby a current cooking session is ended prior to a set end time, and

after the current cooking session has been caused to end prior to the set end time based on the sensed level of smoke, cooking power to be

delivered to the magnetron to commence a next subsequent cooking session.

21. (previously presented) The apparatus according to claim 20

wherein the microwave oven further comprises

at least one externally accessible electrical connector, wherein each electrical connector is configured to deliver electrical power from the microwave oven through the respective electrical connector,

wherein the at least one electrical connector is in operative connection with the at least one power control circuit,

wherein the at least one power control circuit is operative to cause electrical power to be unavailable from the at least one electrical connector when cooking power is being delivered to the magnetron.

22. (new) The apparatus according to claim 1

wherein the at least one power control circuit is operative to cause electrical power to be unavailable to the at least one electrical connector while the magnetron is operative and for at least a preset minimum period after the magnetron becomes inoperative.

23. (new) The apparatus according to claim 14

wherein the electrical connector includes an electric outlet configured to receive a plug that is in electrical connection with a refrigerator.

wherein the at least one power control circuit is operative to cause electrical power to be unavailable from the electric outlet while cooking power is delivered to the magnetron and for a period of time thereafter.

24. (new) The apparatus according to claim 20

wherein the microwave oven further includes

at least one externally accessible electrical outlet,

wherein the electrical outlet is in operative connection with the at least one power control circuit,

wherein the at least one power control circuit is operative to cause electrical power to be unavailable from the electrical outlet when cooking power is being delivered to the magnetron and for a period of time after cooking power is no longer delivered to the magnetron.

REMARKS

Claim Status

Claims 8, 12 and 16 have been amended herein. Claims 22-24 have been added. Claims 1-24 are now pending.

Discussion Of Claim Amendments

The amendments presented herein improve the wording of the claims and add further claims. The amendments do not change the nature of the invention claimed at the time the Application was filed.

Authorization to Charge Fees

The fee for the three (3) additional total claims ($150 – small entity) will be due upon the submission of this Preliminary Amendment. These fees are being authorized to be charged to the undersigned's credit card. However, if this authorization is not effective to pay the fees or if any other fees are due, authorization is hereby given to charge the fees to the Deposit Account 10-0637.

Conclusion

Examination and favorable consideration of the claims is respectfully requested. The undersigned will be happy to discuss any aspect of the Application by telephone at the Office's convenience.

Respectfully submitted,

/Ralph E. Jocke/
Ralph E. Jocke, Reg. No. 31,029
Walker & Jocke Co., LPA
231 South Broadway
Medina, OH 44256
(330) 721-0000
Customer No. 07733

Electronic Patent Application Fee Transmittal

Application Number:	17691628
Filing Date:	10-Mar-2022
Title of Invention:	MULTIPLE LINKED APPLIANCE WITH AUXILIARY OUTLET
First Named Inventor/Applicant Name:	Gregory Allan Thomas Hall
Filer:	Ralph E. Jocke/Amy Barnes
Attorney Docket Number:	INT-1001 CIP 2 C 4

Filed as Small Entity

Filing Fees for Utility under 35 USC 111(a)

Description	Fee Code	Quantity	Amount	Sub-Total in USD($)
Basic Filing:				
Pages:				
Claims:				
CLAIMS IN EXCESS OF 20	2202	3	50	150
Miscellaneous-Filing:				
Petition:				
Patent-Appeals-and-Interference:				
Post-Allowance-and-Post-Issuance:				

Description	Fee Code	Quantity	Amount	Sub-Total in USD($)
Extension-of-Time:				
Miscellaneous:				
			Total in USD ($)	**150**

Electronic Acknowledgement Receipt

EFS ID:	46559585
Application Number:	17691628
International Application Number:	
Confirmation Number:	4539
Title of Invention:	MULTIPLE LINKED APPLIANCE WITH AUXILIARY OUTLET
First Named Inventor/Applicant Name:	Gregory Allan Thomas Hall
Customer Number:	7733
Filer:	Ralph E. Jocke/Amy Barnes
Filer Authorized By:	Ralph E. Jocke
Attorney Docket Number:	INT-1001 CIP 2 C 4
Receipt Date:	06-SEP-2022
Filing Date:	10-MAR-2022
Time Stamp:	17:40:48
Application Type:	Utility under 35 USC 111(a)

Payment information:

Submitted with Payment	yes
Payment Type	CARD
Payment was successfully received in RAM	$150
RAM confirmation Number	E202296H41592332
Deposit Account	100637
Authorized User	Amy Barnes

The Director of the USPTO is hereby authorized to charge indicated fees and credit any overpayment as follows:

37 CFR 1.16 (National application filing, search, and examination fees)

37 CFR 1.17 (Patent application and reexamination processing fees)

37 CFR 1.19 (Document supply fees)

37 CFR 1.21 (Miscellaneous fees and charges)

File Listing:

Document Number	Document Description	File Name	File Size(Bytes)/ Message Digest	Multi Part /.zip	Pages (if appl.)
1		Second-Preliminary-Amendment.pdf	56808 517abbcce550435b6323c8b25802f36f09d16fe5	yes	14
	Multipart Description/PDF files in .zip description				
	Document Description		**Start**	**End**	
	Applicant Arguments/Remarks Made in an Amendment		1	1	
	Claims		2	12	
	Applicant Arguments/Remarks Made in an Amendment		13	14	
Warnings:					
Information:					
2	Fee Worksheet (SB06)	fee-info.pdf	38297 1de53cbe8116517505b057e163e0dfb67cebacb9	no	2
Warnings:					
Information:					
		Total Files Size (in bytes):	95105		

This Acknowledgement Receipt evidences receipt on the noted date by the USPTO of the indicated documents, characterized by the applicant, and including page counts, where applicable. It serves as evidence of receipt similar to a Post Card, as described in MPEP 503.

New Applications Under 35 U.S.C. 111
If a new application is being filed and the application includes the necessary components for a filing date (see 37 CFR 1.53(b)-(d) and MPEP 506), a Filing Receipt (37 CFR 1.54) will be issued in due course and the date shown on this Acknowledgement Receipt will establish the filing date of the application.
National Stage of an International Application under 35 U.S.C. 371
If a timely submission to enter the national stage of an international application is compliant with the conditions of 35 U.S.C. 371 and other applicable requirements a Form PCT/DO/EO/903 indicating acceptance of the application as a national stage submission under 35 U.S.C. 371 will be issued in addition to the Filing Receipt, in due course.
New International Application Filed with the USPTO as a Receiving Office
If a new international application is being filed and the international application includes the necessary components for an international filing date (see PCT Article 11 and MPEP 1810), a Notification of the International Application Number and of the International Filing Date (Form PCT/RO/105) will be issued in due course, subject to prescriptions concerning national security, and the date shown on this Acknowledgement Receipt will establish the international filing date of the application.

PTO/SB/08a (01-22)
Approved for use through 05/31/2024. OMB 0651-0031
U.S. Patent and Trademark Office; U.S. DEPARTMENT OF COMMERCE

Under the Paperwork Reduction Act of 1995, no persons are required to respond to a collection of information unless it contains a valid OMB control number.

INFORMATION DISCLOSURE STATEMENT BY APPLICANT

(Not for submission under 37 CFR 1.99)

Application Number	17691628
Filing Date	2022-03-10
First Named Inventor	Gregory Allan Thomas Hall
Art Unit	3761
Examiner Name	
Attorney Docket Number	INT-1001 CIP 2 C 4

U.S.PATENTS

Examiner Initial*	Cite No	Patent Number	Kind Code[1]	Issue Date	Name of Patentee or Applicant of cited Document	Pages,Columns,Lines where Relevant Passages or Relevant Figures Appear
	1	5493119		1996-02-20	Torngren	

If you wish to add additional U.S. Patent citation information please click the Add button.

U.S.PATENT APPLICATION PUBLICATIONS

Examiner Initial*	Cite No	Publication Number	Kind Code[1]	Publication Date	Name of Patentee or Applicant of cited Document	Pages,Columns,Lines where Relevant Passages or Relevant Figures Appear
	1					

If you wish to add additional U.S. Published Application citation information please click the Add button.

FOREIGN PATENT DOCUMENTS

Examiner Initial*	Cite No	Foreign Document Number[3]	Country Code[2] ¡	Kind Code[4]	Publication Date	Name of Patentee or Applicant of cited Document	Pages,Columns,Lines where Relevant Passages or Relevant Figures Appear	T[5]
	1							☐

If you wish to add additional Foreign Patent Document citation information please click the Add button

NON-PATENT LITERATURE DOCUMENTS

Examiner Initials*	Cite No	Include name of the author (in CAPITAL LETTERS), title of the article (when appropriate), title of the item (book, magazine, journal, serial, symposium, catalog, etc), date, pages(s), volume-issue number(s), publisher, city and/or country where published.	T[5]

INFORMATION DISCLOSURE STATEMENT BY APPLICANT (Not for submission under 37 CFR 1.99)	Application Number	17691628
	Filing Date	2022-03-10
	First Named Inventor	Gregory Allan Thomas Hall
	Art Unit	3761
	Examiner Name	
	Attorney Docket Number	INT-1001 CIP 2 C 4

	1		☐

If you wish to add additional non-patent literature document citation information please click the Add button

EXAMINER SIGNATURE

Examiner Signature		Date Considered	

*EXAMINER: Initial if reference considered, whether or not citation is in conformance with MPEP 609. Draw line through a citation if not in conformance and not considered. Include copy of this form with next communication to applicant.

[1] See Kind Codes of USPTO Patent Documents at www.USPTO.GOV or MPEP 901.04. [2] Enter office that issued the document, by the two-letter code (WIPO Standard ST.3). [3] For Japanese patent documents, the indication of the year of the reign of the Emperor must precede the serial number of the patent document. [4] Kind of document by the appropriate symbols as indicated on the document under WIPO Standard ST.16 if possible. [5] Applicant is to place a check mark here if English language translation is attached.

INFORMATION DISCLOSURE STATEMENT BY APPLICANT (Not for submission under 37 CFR 1.99)	Application Number	17691628
	Filing Date	2022-03-10
	First Named Inventor	Gregory Allan Thomas Hall
	Art Unit	3761
	Examiner Name	
	Attorney Docket Number	INT-1001 CIP 2 C 4

CERTIFICATION STATEMENT

Please see 37 CFR 1.97 and 1.98 to make the appropriate selection(s):

☐ That each item of information contained in the information disclosure statement was first cited in any communication from a foreign patent office in a counterpart foreign application not more than three months prior to the filing of the information disclosure statement. See 37 CFR 1.97(e)(1).

OR

☐ That no item of information contained in the information disclosure statement was cited in a communication from a foreign patent office in a counterpart foreign application, and, to the knowledge of the person signing the certification after making reasonable inquiry, no item of information contained in the information disclosure statement was known to any individual designated in 37 CFR 1.56(c) more than three months prior to the filing of the information disclosure statement. See 37 CFR 1.97(e)(2).

☐ See attached certification statement.

☐ The fee set forth in 37 CFR 1.17 (p) has been submitted herewith.

☒ A certification statement is not submitted herewith.

SIGNATURE

A signature of the applicant or representative is required in accordance with CFR 1.33, 10.18. Please see CFR 1.4(d) for the form of the signature.

Signature	/Ralph E. Jocke/	Date (YYYY-MM-DD)	2022-11-15
Name/Print	Ralph E. Jocke	Registration Number	31,029

This collection of information is required by 37 CFR 1.97 and 1.98. The information is required to obtain or retain a benefit by the public which is to file (and by the USPTO to process) an application. Confidentiality is governed by 35 U.S.C. 122 and 37 CFR 1.14. This collection is estimated to take 1 hour to complete, including gathering, preparing and submitting the completed application form to the USPTO. Time will vary depending upon the individual case. Any comments on the amount of time you require to complete this form and/or suggestions for reducing this burden, should be sent to the Chief Information Officer, U.S. Patent and Trademark Office, U.S. Department of Commerce, P.O. Box 1450, Alexandria, VA 22313-1450. DO NOT SEND FEES OR COMPLETED FORMS TO THIS ADDRESS. **SEND TO: Commissioner for Patents, P.O. Box 1450, Alexandria, VA 22313-1450.**

Privacy Act Statement

The Privacy Act of 1974 (P.L. 93-579) requires that you be given certain information in connection with your submission of the attached form related to a patent application or patent. Accordingly, pursuant to the requirements of the Act, please be advised that: (1) the general authority for the collection of this information is 35 U.S.C. 2(b)(2); (2) furnishing of the information solicited is voluntary; and (3) the principal purpose for which the information is used by the U.S. Patent and Trademark Office is to process and/or examine your submission related to a patent application or patent. If you do not furnish the requested information, the U.S. Patent and Trademark Office may not be able to process and/or examine your submission, which may result in termination of proceedings or abandonment of the application or expiration of the patent.

The information provided by you in this form will be subject to the following routine uses:

1. The information on this form will be treated confidentially to the extent allowed under the Freedom of Information Act (5 U.S.C. 552) and the Privacy Act (5 U.S.C. 552a). Records from this system of records may be disclosed to the Department of Justice to determine whether the Freedom of Information Act requires disclosure of these record s.

2. A record from this system of records may be disclosed, as a routine use, in the course of presenting evidence to a court, magistrate, or administrative tribunal, including disclosures to opposing counsel in the course of settlement negotiations.

3. A record in this system of records may be disclosed, as a routine use, to a Member of Congress submitting a request involving an individual, to whom the record pertains, when the individual has requested assistance from the Member with respect to the subject matter of the record.

4. A record in this system of records may be disclosed, as a routine use, to a contractor of the Agency having need for the information in order to perform a contract. Recipients of information shall be required to comply with the requirements of the Privacy Act of 1974, as amended, pursuant to 5 U.S.C. 552a(m).

5. A record related to an International Application filed under the Patent Cooperation Treaty in this system of records may be disclosed, as a routine use, to the International Bureau of the World Intellectual Property Organization, pursuant to the Patent Cooperation Treaty.

6. A record in this system of records may be disclosed, as a routine use, to another federal agency for purposes of National Security review (35 U.S.C. 181) and for review pursuant to the Atomic Energy Act (42 U.S.C. 218(c)).

7. A record from this system of records may be disclosed, as a routine use, to the Administrator, General Services, or his/her designee, during an inspection of records conducted by GSA as part of that agency's responsibility to recommend improvements in records management practices and programs, under authority of 44 U.S.C. 2904 and 2906. Such disclosure shall be made in accordance with the GSA regulations governing inspection of records for this purpose, and any other relevant (i.e., GSA or Commerce) directive. Such disclosure shall not be used to make determinations about individuals.

8. A record from this system of records may be disclosed, as a routine use, to the public after either publication of the application pursuant to 35 U.S.C. 122(b) or issuance of a patent pursuant to 35 U.S.C. 151. Further, a record may be disclosed, subject to the limitations of 37 CFR 1.14, as a routine use, to the public if the record was filed in an application which became abandoned or in which the proceedings were terminated and which application is referenced by either a published application, an application open to public inspections or an issued patent.

9. A record from this system of records may be disclosed, as a routine use, to a Federal, State, or local law enforcement agency, if the USPTO becomes aware of a violation or potential violation of law or regulation.

Electronic Acknowledgement Receipt

EFS ID:	47037675
Application Number:	17691628
International Application Number:	
Confirmation Number:	4539
Title of Invention:	MULTIPLE LINKED APPLIANCE WITH AUXILIARY OUTLET
First Named Inventor/Applicant Name:	Gregory Allan Thomas Hall
Customer Number:	7733
Filer:	Ralph E. Jocke/Amy Barnes
Filer Authorized By:	Ralph E. Jocke
Attorney Docket Number:	INT-1001 CIP 2 C 4
Receipt Date:	22-NOV-2022
Filing Date:	10-MAR-2022
Time Stamp:	11:17:06
Application Type:	Utility under 35 USC 111(a)

Payment information:

Submitted with Payment	no

File Listing:

Document Number	Document Description	File Name	File Size(Bytes)/ Message Digest	Multi Part /.zip	Pages (if appl.)
1	Information Disclosure Statement (IDS) Form (SB08)	Information_Disclosure.pdf	72607 c76553d2459e0fd452e676c932f162aeac439bb7	no	4

Warnings:

Information:	
This is not an USPTO supplied IDS fillable form	
Total Files Size (in bytes):	72607

This Acknowledgement Receipt evidences receipt on the noted date by the USPTO of the indicated documents, characterized by the applicant, and including page counts, where applicable. It serves as evidence of receipt similar to a Post Card, as described in MPEP 503.

New Applications Under 35 U.S.C. 111
If a new application is being filed and the application includes the necessary components for a filing date (see 37 CFR 1.53(b)-(d) and MPEP 506), a Filing Receipt (37 CFR 1.54) will be issued in due course and the date shown on this Acknowledgement Receipt will establish the filing date of the application.
National Stage of an International Application under 35 U.S.C. 371
If a timely submission to enter the national stage of an international application is compliant with the conditions of 35 U.S.C. 371 and other applicable requirements a Form PCT/DO/EO/903 indicating acceptance of the application as a national stage submission under 35 U.S.C. 371 will be issued in addition to the Filing Receipt, in due course.
New International Application Filed with the USPTO as a Receiving Office
If a new international application is being filed and the international application includes the necessary components for an international filing date (see PCT Article 11 and MPEP 1810), a Notification of the International Application Number and of the International Filing Date (Form PCT/RO/105) will be issued in due course, subject to prescriptions concerning national security, and the date shown on this Acknowledgement Receipt will establish the international filing date of the application.

UNITED STATES PATENT AND TRADEMARK OFFICE

UNITED STATES DEPARTMENT OF COMMERCE
United States Patent and Trademark Office
Address: COMMISSIONER FOR PATENTS
P.O. Box 1450
Alexandria, Virginia 22313-1450
www.uspto.gov

APPLICATION NO.	FILING DATE	FIRST NAMED INVENTOR	ATTORNEY DOCKET NO.	CONFIRMATION NO.
17/691,628	03/10/2022	Gregory Allan Thomas Hall	INT-1001 CIP 2 C 4	4539

7733 7590 01/17/2023
WALKER & JOCKE
231 SOUTH BROADWAY STREET
MEDINA, OH 44256

EXAMINER
NGUYEN, HUNG D

ART UNIT	PAPER NUMBER
3761	

MAIL DATE	DELIVERY MODE
01/17/2023	PAPER

Please find below and/or attached an Office communication concerning this application or proceeding.

The time period for reply, if any, is set in the attached communication.

PTOL-90A (Rev. 04/07)

Office Action Summary	Application No. 17/691,628	Applicant(s) Hall et al.	
	Examiner HUNG D NGUYEN	Art Unit 3761	AIA (FITF) Status Yes

-- The MAILING DATE of this communication appears on the cover sheet with the correspondence address --

Period for Reply

A SHORTENED STATUTORY PERIOD FOR REPLY IS SET TO EXPIRE 2 MONTHS FROM THE MAILING DATE OF THIS COMMUNICATION.

- Extensions of time may be available under the provisions of 37 CFR 1.136(a). In no event, however, may a reply be timely filed after SIX (6) MONTHS from the mailing date of this communication.
- If NO period for reply is specified above, the maximum statutory period will apply and will expire SIX (6) MONTHS from the mailing date of this communication.
- Failure to reply within the set or extended period for reply will, by statute, cause the application to become ABANDONED (35 U.S.C. § 133). Any reply received by the Office later than three months after the mailing date of this communication, even if timely filed, may reduce any earned patent term adjustment. See 37 CFR 1.704(b).

Status

1)☑ Responsive to communication(s) filed on 11/22/2022.

☐ A declaration(s)/affidavit(s) under **37 CFR 1.130(b)** was/were filed on _____.

2a)☐ This action is **FINAL.** 2b) ☐ This action is non-final.

3)☐ An election was made by the applicant in response to a restriction requirement set forth during the interview on _____; the restriction requirement and election have been incorporated into this action.

4)☑ Since this application is in condition for allowance except for formal matters, prosecution as to the merits is closed in accordance with the practice under *Ex parte Quayle*, 1935 C.D. 11, 453 O.G. 213.

Disposition of Claims*

5) ☑ Claim(s) 1-24 is/are pending in the application.

5a) Of the above claim(s) _____ is/are withdrawn from consideration.

6) ☑ Claim(s) 1-24 is/are allowed.

7) ☐ Claim(s) _____ is/are rejected.

8) ☐ Claim(s) _____ is/are objected to.

9) ☐ Claim(s) _____ are subject to restriction and/or election requirement

* If any claims have been determined allowable, you may be eligible to benefit from the **Patent Prosecution Highway** program at a participating intellectual property office for the corresponding application. For more information, please see http://www.uspto.gov/patents/init_events/pph/index.jsp or send an inquiry to **PPHfeedback@uspto.gov.**

Application Papers

10)☐ The specification is objected to by the Examiner.

11)☑ The drawing(s) filed on 3/10/2022 is/are: a)☐ accepted or b)☑ objected to by the Examiner.

Applicant may not request that any objection to the drawing(s) be held in abeyance. See 37 CFR 1.85(a).

Replacement drawing sheet(s) including the correction is required if the drawing(s) is objected to. See 37 CFR 1.121(d).

Priority under 35 U.S.C. § 119

12)☐ Acknowledgment is made of a claim for foreign priority under 35 U.S.C. § 119(a)-(d) or (f).

Certified copies:

a)☐ All b)☐ Some** c)☐ None of the:

1.☐ Certified copies of the priority documents have been received.

2.☐ Certified copies of the priority documents have been received in Application No. _____.

3.☐ Copies of the certified copies of the priority documents have been received in this National Stage application from the International Bureau (PCT Rule 17.2(a)).

** See the attached detailed Office action for a list of the certified copies not received.

Attachment(s)

1) ☑ Notice of References Cited (PTO-892)

2) ☑ Information Disclosure Statement(s) (PTO/SB/08a and/or PTO/SB/08b) Paper No(s)/Mail Date 4/26/2022; 11/22/2022.

3) ☐ Interview Summary (PTO-413) Paper No(s)/Mail Date _____.

4) ☐ Other: _____.

Notice of Pre-AIA or AIA Status

1. The present application, filed on or after March 16, 2013, is being examined under the first inventor to file provisions of the AIA.

Priority

2. The claim to priority as a CON of 16/671,383, now USPN 11,274,876 filed on November 1, 2019, which is CIP of 15/600,118, now USPN 10,495,374 filed on May 19, 2017, which is CON of 15/135,883, now USPN 9,664,436 filed on April 22, 2016, which is CIP of 14/262,290, now USPN 9,657,974 filed on April 25, 2014, which is CIP of 12/317,632, now USPN 8,742,304 filed on December 23, 2008, the application 16/671,383 is a CIP of 15,239,378, now abandoned, filed on August 17, 2016 is acknowledged in the instant application.

Information Disclosure Statement

3. The Information Disclosure Statement filed on April 26, 2022 and November 22, 2022 have been considered by the Examiner.

Quayle Action

4. This application is in condition for allowance except for the following formal matters:

5. The drawings are objected to under 37 CFR 1.83(a). The drawings must show every feature of the invention specified in the claims. Therefore, the "**safe**" must be shown or the feature(s) canceled from the claim(s). No new matter should be entered.

Corrected drawing sheets in compliance with 37 CFR 1.121(d) are required in reply to the Office action to avoid abandonment of the application. Any amended replacement drawing sheet should include all of the figures appearing on the immediate

prior version of the sheet, even if only one figure is being amended. The figure or figure number of an amended drawing should not be labeled as "amended." If a drawing figure is to be canceled, the appropriate figure must be removed from the replacement sheet, and where necessary, the remaining figures must be renumbered and appropriate changes made to the brief description of the several views of the drawings for consistency. Additional replacement sheets may be necessary to show the renumbering of the remaining figures. Each drawing sheet submitted after the filing date of an application must be labeled in the top margin as either "Replacement Sheet" or "New Sheet" pursuant to 37 CFR 1.121(d). If the changes are not accepted by the examiner, the applicant will be notified and informed of any required corrective action in the next Office action. The objection to the drawings will not be held in abeyance.

Prosecution on the merits is closed in accordance with the practice under *Ex parte Quayle*, 25 USPQ 74, 453 O.G. 213, (Comm'r Pat. 1935).

A shortened statutory period for reply to this action is set to expire **TWO (2) MONTHS** from the mailing date of this letter. Extensions of time may be granted under 37 CFR 1.136 but in no case can any extension carry the date for reply to this Office action beyond the maximum period of SIX MONTHS set by statute (35 U.S.C. 133).

Conclusion

6. The prior art made of record and not relied upon is considered pertinent to applicant's disclosure.

- Shim (US Pat. 4,958,055)

7. Any inquiry concerning this communication or earlier communications from the examiner should be directed to HUNG D NGUYEN whose telephone number is (571)270-7828. The examiner can normally be reached Mon-Fri 9AM - 9PM.

Examiner interviews are available via telephone, in-person, and video conferencing using a USPTO supplied web-based collaboration tool. To schedule an interview, applicant is encouraged to use the USPTO Automated Interview Request (AIR) at http://www.uspto.gov/interviewpractice.

If attempts to reach the examiner by telephone are unsuccessful, the examiner's supervisor, Helena Kosanovic can be reached on (571)272-9059. The fax phone number for the organization where this application or proceeding is assigned is 571-273-8300.

Information regarding the status of published or unpublished applications may be obtained from Patent Center. Unpublished application information in Patent Center is available to registered users. To file and manage patent submissions in Patent Center, visit: https://patentcenter.uspto.gov. Visit https://www.uspto.gov/patents/apply/patent-center for more information about Patent Center and https://www.uspto.gov/patents/docx for information about filing in DOCX format. For additional questions, contact the Electronic Business Center (EBC) at 866-217-9197 (toll-free). If you would like assistance from a USPTO Customer Service Representative, call 800-786-9199 (IN USA OR CANADA) or 571-272-1000.

/HUNG D NGUYEN/
Primary Examiner, Art Unit 3761
1/12/2023

HUNG D. NGUYEN
Primary Examiner
Art Unit 3761

Notice of References Cited	Application/Control No. 17/691,628	Applicant(s)/Patent Under Reexamination Hall et al.	
	Examiner HUNG D NGUYEN	Art Unit 3761	Page 1 of 1

U.S. PATENT DOCUMENTS

*		Document Number Country Code-Number-Kind Code	Date MM-YYYY	Name	CPC Classification	US Classification
*	A	US-4958055-A	09-1990	Shim; Jae E.	F25D23/12	219/716
	B					
	C					
	D					
	E					
	F					
	G					
	H					
	I					
	J					
	K					
	L					
	M					

FOREIGN PATENT DOCUMENTS

*		Document Number Country Code-Number-Kind Code	Date MM-YYYY	Country	Name	CPC Classification
	N					
	O					
	P					
	Q					
	R					
	S					
	T					

NON-PATENT DOCUMENTS

*		Include as applicable: Author, Title Date, Publisher, Edition or Volume, Pertinent Pages)
	U	
	V	
	W	
	X	

*A copy of this reference is not being furnished with this Office action. (See MPEP § 707.05(a).)
Dates in MM-YYYY format are publication dates. Classifications may be US or foreign.

Search Notes	Application/Control No.	Applicant(s)/Patent Under Reexamination
	17/691,628	Hall et al.
	Examiner	**Art Unit**
	HUNG D NGUYEN	3761

CPC - Searched*		
Symbol	**Date**	**Examiner**
H05B6/642,6435,645,6458,6461,6482,66,666,68,80,806,808; F25D23/003,12; F25D29/005; F25D31/005	01/12/2023	HN

CPC Combination Sets - Searched*		
Symbol	**Date**	**Examiner**

US Classification - Searched*			
Class	**Subclass**	**Date**	**Examiner**
219	482,483485,488,678,679,695,697,702,715,716,717, 718,719,720,721,722,723,756,757,760,761	01/12/2023	HN

* See search history printout included with this form or the SEARCH NOTES box below to determine the scope of the search.

Search Notes		
Search Notes	**Date**	**Examiner**
Inventor search	01/12/2023	
Global Dossier search	01/12/2023	HN
PE2E search with text	01/12/2023	HN

Interference Search			
US Class/CPC Symbol	**US Subclass/CPC Group**	**Date**	**Examiner**

/HUNG D NGUYEN/ Primary Examiner, Art Unit 3761	

PE2E SEARCH - Search History (Prior Art)

Ref #	Hits	Search Query	DBs	Default Operator	Plurals	British Equivalents	Time Stamp
L1	768	((("HALL") near3 ("Gregory")) OR (("EMMA") near3 ("Philip")) OR (("ESTILL") near3 ("Jim")) OR (("CUNNINGHAM") near3 ("Bryan")) OR (("O'BRIEN") near3 ("Dennis"))).INV.	(US-PGPUB; USPAT; USOCR; EPO; JPO; DERWENT)	WITH	ON	ON	2023/01/11 11:04 AM
L2	18	L1 AND ((microwave NEAR oven) SAME refrigerator)	(US-PGPUB; USPAT; USOCR; FIT (AU, AP, AT, BE, BG, BR, BY, CA, CH, CN, CS, CU, CZ, DD, DE, DK, EA, EE, EP, ES, FI, FR, GB, HR, HU, ID, IE, IL, IS, IT, JP, KR, LT, LU, LV, MA, OA, RU, SU, WO, MC, MD, MY, NL, NO, NZ, PH, PL, PT, RO, RS, SE, SG, SI, SK, TH, TN, TR, TW, UA, VN); FPRS; EPO; JPO; DERWENT; IBM_TDB)	WITH	ON	ON	2023/01/11 11:05 AM
L3	9	L2 AND (smok$3 (sens$3 OR detect$3))	(US-PGPUB; USPAT; USOCR; FIT (AU, AP, AT, BE, BG, BR, BY, CA, CH, CN, CS, CU, CZ, DD, DE, DK, EA, EE, EP, ES, FI, FR, GB, HR, HU, ID, IE, IL, IS, IT, JP, KR, LT, LU, LV, MA, OA, RU, SU, WO, MC, MD, MY, NL, NO, NZ, PH, PL, PT, RO, RS, SE, SG, SI, SK, TH, TN, TR, TW, UA, VN); FPRS; EPO; JPO; DERWENT; IBM_TDB)	WITH	ON	ON	2023/01/11 11:05 AM
L4	41	(Artificial Intelligence) Similar to: 17/667,161 with 0 CPC Selections and 0 Text Selections Text: (US-20220196319-A1 OR US-20220163255-A1 OR US-11274876-B2 OR US-9664436-B1	(US-PGPUB; USPAT; USOCR; FIT (AU, AP, AT, BE, BG, BR, BY, CA, CH, CN, CS, CU, CZ, DD, DE, DK, EA, EE, EP, ES, FI, FR, GB, HR, HU, ID, IE, IL, IS, IT, JP, KR, LT, LU, LV, MA, OA, RU, SU, WO, MC, MD, MY, NL, NO,	WITH	ON	ON	2023/01/11 05:04 PM

		OR US-20200064056-A1 OR US-10495374-B1 OR US-9791206-B1 OR US-4880954-A OR CA-2887526-A1 OR WO-2015164163-A1 OR KR-900000654-A OR CA-2887526-C OR US-20220117050-A1 OR KR-0177503-B1 OR US-5315084-A OR EP-1827176-A1 OR WO-2006068393-A1 OR DE-1931505-C3 OR WO-2020151595-A1 OR AU-2020212872-A1 OR AU-2020212872-B2 OR US-20220099361-A1 OR EP-3910272-A1 OR CN-111473593-A OR US-4027727-A OR JP-2008525752-A OR JP-H0789005-B2 OR GB-2221105-A OR AU-2020214406-A8 OR CN-209897300-U OR JP-2622364-B2 OR EP-3926260-A1 OR US-20220113084-A1 OR GB-1273217-A OR WO-2020156333-A1 OR US-20060188418-A1 OR WO-2006090996-A1 OR JP-H0225680-A OR RU-2770871-C1 OR AT-380330-B OR DE-3916082-A1 OR US-20220120497-A1 OR EP-3917281-A1 OR AU-2020214406-A1 OR AU-2020226423-B2 OR WO-0201920-A1 OR AU-2020226423-A1 OR US-6121593-A OR CN-209893723-U OR WO-2020168945-A1).did.	NZ, PH, PL, PT, RO, RS, SE, SG, SI, SK, TH, TN, TR, TW, UA, VN))				
L5	38	(Artificial Intelligence) Similar to: 17/667,161 with 0 CPC Selections and 1 Text Selection Text: (US-20220196319-A1 OR US-20220163255-A1 OR US-11274876-B2 OR US-9664436-B1	(US-PGPUB; USPAT; USOCR; FIT (AU, AP, AT, BE, BG, BR, BY, CA, CH, CN, CS, CU, CZ, DD, DE, DK, EA, EE, EP, ES, FI, FR, GB, HR, HU, ID, IE, IL, IS, IT, JP, KR, LT, LU, LV, MA, OA, RU, SU, WO, MC, MD, MY, NL, NO, NZ, PH, PL, PT, RO,	WITH	ON	ON	2023/01/11 05:07 PM

		OR US-10495374-B1 OR US-20200064056-A1 OR US-9791206-B1 OR US-5005123-A OR US-4370535-A OR DE-3015436-A1 OR FR-2802383-A1 OR CA-1114457-A OR CN-106851885-A OR KR-900000093-Y1 OR CA-1136225-A OR DE-3308826-A1 OR DE-2449572-B2 OR DE-3741381-A1 OR DE-3741381-C2 OR KR-960005030-B1 OR JP-2019505958-A OR US-3943317-A OR DE-2918504-A1 OR DE-3008689-A1 OR EP-0248581-A2 OR DE-2917214-A1 OR DE-60104981-T2 OR CA-1131712-A OR US-4196332-A OR DE-2921266-A1 OR US-4481393-A OR KR-960007569-Y1 OR GB-2266790-A OR CN-110207178-A OR KR-920008888-Y1 OR GB-2036378-A OR DE-2954369-C2 OR CN-108900099-A OR KR-100443816-B1 OR US-4188520-A OR CA-1119258-A OR FR-2629975-A1 OR DE-3101103-C2 OR CA-1218419-A OR US-2919336-A OR KR-20020075700-A OR KR-920003471-B1 OR DE-3308826-C2 OR EP-0099705-B1 OR KR-940010816-B1).did.	RS, SE, SG, SI, SK, TH, TN, TR, TW, UA, VN))				
L6	4	("4383158" OR "5744785" OR "10009965" OR "5493119").pn.	(US-PGPUB; USPAT)	WITH	ON	ON	2023/01/11 05:11 PM
L7	12218	(microwave NEAR oven) AND ((smok$3 OR vapor$4) (sens$3 OR detect$3))	(US-PGPUB; USPAT; USOCR; FIT (AP, AT, AU, BE, BG, BR, BY, CA, CH, CN, CS, CU, CZ, DD, DE, DK, EA, EE, EP, ES, FI, FR, GB, HR, HU, ID, IE, IL, IS,	WITH	ON	ON	2023/01/11 05:15 PM

			IT, JP, KR, LT, LU, LV, MA, MC, MD, MY, NL, NO, NZ, OA, PH, PL, PT, RO, RS, RU, SE, SG, SI, SK, SU, TH, TN, TR, TW, UA, VN, WO); FPRS; EPO; JPO; DERWENT; IBM_TDB)				
L8	10	L7 AND (control$4 smok$3 withdrawn cook$3)	(US-PGPUB; USPAT; USOCR; FIT (AP, AT, AU, BE, BG, BR, BY, CA, CH, CN, CS, CU, CZ, DD, DE, DK, EA, EE, EP, ES, FI, FR, GB, HR, HU, ID, IE, IL, IS, IT, JP, KR, LT, LU, LV, MA, MC, MD, MY, NL, NO, NZ, OA, PH, PL, PT, RO, RS, RU, SE, SG, SI, SK, SU, TH, TN, TR, TW, UA, VN, WO); FPRS; EPO; JPO; DERWENT; IBM_TDB)	WITH	ON	ON	2023/01/11 05:16 PM
L9	317	L7 AND (control$4 smok$3 cook$3 (process$3 OR operation))	(US-PGPUB; USPAT; USOCR; FIT (AP, AT, AU, BE, BG, BR, BY, CA, CH, CN, CS, CU, CZ, DD, DE, DK, EA, EE, EP, ES, FI, FR, GB, HR, HU, ID, IE, IL, IS, IT, JP, KR, LT, LU, LV, MA, MC, MD, MY, NL, NO, NZ, OA, PH, PL, PT, RO, RS, RU, SE, SG, SI, SK, SU, TH, TN, TR, TW, UA, VN, WO); FPRS; EPO; JPO; DERWENT; IBM_TDB)	WITH	ON	ON	2023/01/11 05:18 PM
L10	168	L7 AND (control$4 smok$3 cook$3 (process$3 OR operation) power)	(US-PGPUB; USPAT; USOCR; FIT (AP, AT, AU, BE, BG, BR, BY, CA, CH, CN, CS, CU, CZ, DD, DE, DK, EA, EE, EP, ES, FI, FR, GB, HR, HU, ID, IE, IL, IS, IT, JP, KR, LT, LU, LV, MA, MC, MD, MY, NL, NO, NZ, OA, PH, PL, PT, RO, RS, RU, SE, SG, SI, SK, SU, TH, TN, TR, TW, UA, VN, WO); FPRS; EPO; JPO; DERWENT; IBM_TDB)	WITH	ON	ON	2023/01/11 05:23 PM

L11	384	L7 AND (control$4 smok$3 cook$3 power)	(US-PGPUB; USPAT; USOCR; FIT (AP, AT, AU, BE, BG, BR, BY, CA, CH, CN, CS, CU, CZ, DD, DE, DK, EA, EE, EP, ES, FI, FR, GB, HR, HU, ID, IE, IL, IS, IT, JP, KR, LT, LU, LV, MA, MC, MD, MY, NL, NO, NZ, OA, PH, PL, PT, RO, RS, RU, SE, SG, SI, SK, SU, TH, TN, TR, TW, UA, VN, WO); FPRS; EPO; JPO; DERWENT; IBM_TDB)	WITH	ON	ON	2023/01/11 05:59 PM
L16	9131	219/482,483485,488,678,679,695,697,702,715,716,717,718,719,720,721,722,723,756,757,760,761.ccls.	(US-PGPUB; USPAT; USOCR; FIT (AP, AT, AU, BE, BG, BR, BY, CA, CH, CN, CS, CU, CZ, DD, DE, DK, EA, EE, EP, ES, FI, FR, GB, HR, HU, ID, IE, IL, IS, IT, JP, KR, LT, LU, LV, MA, MC, MD, MY, NL, NO, NZ, OA, PH, PL, PT, RO, RS, RU, SE, SG, SI, SK, SU, TH, TN, TR, TW, UA, VN, WO); FPRS; EPO; JPO; DERWENT; IBM_TDB)	WITH	ON	ON	2023/01/12 11:04 AM
L17	114	L16 AND (microwave NEAR oven) AND ((smok$3 OR vapor$4) (sens$3 OR detect$3))	(US-PGPUB; USPAT; USOCR; FIT (AP, AT, AU, BE, BG, BR, BY, CA, CH, CN, CS, CU, CZ, DD, DE, DK, EA, EE, EP, ES, FI, FR, GB, HR, HU, ID, IE, IL, IS, IT, JP, KR, LT, LU, LV, MA, MC, MD, MY, NL, NO, NZ, OA, PH, PL, PT, RO, RS, RU, SE, SG, SI, SK, SU, TH, TN, TR, TW, UA, VN, WO); FPRS; EPO; JPO; DERWENT; IBM_TDB)	WITH	ON	ON	2023/01/12 11:05 AM
L18	10	L17 AND (control$4 smok$3 power)	(US-PGPUB; USPAT; USOCR; FIT (AP, AT, AU, BE, BG, BR, BY, CA, CH, CN, CS, CU, CZ, DD, DE, DK, EA, EE, EP, ES, FI, FR, GB, HR, HU, ID, IE, IL, IS, IT, JP, KR, LT, LU, LV, MA, MC, MD, MY, NL,	WITH	ON	ON	2023/01/12 11:05 AM

			NO, NZ, OA, PH, PL, PT, RO, RS, RU, SE, SG, SI, SK, SU, TH, TN, TR, TW, UA, VN, WO); FPRS; EPO; JPO; DERWENT; IBM_TDB)				
L19	1	L16 AND (microwave NEAR oven) AND (refrigerator) AND ((safe$3 OR security) box)	(US-PGPUB; USPAT; USOCR; FIT (AP, AT, AU, BE, BG, BR, BY, CA, CH, CN, CS, CU, CZ, DD, DE, DK, EA, EE, EP, ES, FI, FR, GB, HR, HU, ID, IE, IL, IS, IT, JP, KR, LT, LU, LV, MA, MC, MD, MY, NL, NO, NZ, OA, PH, PL, PT, RO, RS, RU, SE, SG, SI, SK, SU, TH, TN, TR, TW, UA, VN, WO); FPRS; EPO; JPO; DERWENT; IBM_TDB)	WITH	ON	ON	2023/01/12 11:17 AM
L20	62	L16 AND ((microwave NEAR oven) SAME refrigerator)	(US-PGPUB; USPAT; USOCR; FIT (AP, AT, AU, BE, BG, BR, BY, CA, CH, CN, CS, CU, CZ, DD, DE, DK, EA, EE, EP, ES, FI, FR, GB, HR, HU, ID, IE, IL, IS, IT, JP, KR, LT, LU, LV, MA, MC, MD, MY, NL, NO, NZ, OA, PH, PL, PT, RO, RS, RU, SE, SG, SI, SK, SU, TH, TN, TR, TW, UA, VN, WO); FPRS; EPO; JPO; DERWENT; IBM_TDB)	WITH	ON	ON	2023/01/12 12:12 PM
L21	134	L16 AND (stove OR oven) AND ((smok$3 OR vapor$4) (sens$3 OR detect$3))	(US-PGPUB; USPAT; USOCR; FIT (AP, AT, AU, BE, BG, BR, BY, CA, CH, CN, CS, CU, CZ, DD, DE, DK, EA, EE, EP, ES, FI, FR, GB, HR, HU, ID, IE, IL, IS, IT, JP, KR, LT, LU, LV, MA, MC, MD, MY, NL, NO, NZ, OA, PH, PL, PT, RO, RS, RU, SE, SG, SI, SK, SU, TH, TN, TR, TW, UA, VN, WO); FPRS; EPO; JPO; DERWENT; IBM_TDB)	WITH	ON	ON	2023/01/12 12:45 PM
L22	12	L21 AND (control$4 smok$3 power)	(US-PGPUB; USPAT; USOCR; FIT (AP, AT,	WITH	ON	ON	2023/01/12 12:46 PM

			AU, BE, BG, BR, BY, CA, CH, CN, CS, CU, CZ, DD, DE, DK, EA, EE, EP, ES, FI, FR, GB, HR, HU, ID, IE, IL, IS, IT, JP, KR, LT, LU, LV, MA, MC, MD, MY, NL, NO, NZ, OA, PH, PL, PT, RO, RS, RU, SE, SG, SI, SK, SU, TH, TN, TR, TW, UA, VN, WO); FPRS; EPO; JPO; DERWENT; IBM_TDB)				
L23	87139	(H05B6/642,6435,645,6458,6461,6482,66,666,68,80,806,808 OR F25D23/003,12 OR F25D29/005 OR F25D31/005).cpc.	(US-PGPUB; USPAT; USOCR; FIT (AP, AT, AU, BE, BG, BR, BY, CA, CH, CN, CS, CU, CZ, DD, DE, DK, EA, EE, EP, ES, FI, FR, GB, HR, HU, ID, IE, IL, IS, IT, JP, KR, LT, LU, LV, MA, MC, MD, MY, NL, NO, NZ, OA, PH, PL, PT, RO, RS, RU, SE, SG, SI, SK, SU, TH, TN, TR, TW, UA, VN, WO); FPRS; EPO; JPO; DERWENT; IBM_TDB)	WITH	ON	ON	2023/01/12 12:55 PM
L24	774	L23 AND (microwave NEAR oven) AND ((smok$3 OR vapor$4) (sens$3 OR detect$3))	(US-PGPUB; USPAT; USOCR; FIT (AP, AT, AU, BE, BG, BR, BY, CA, CH, CN, CS, CU, CZ, DD, DE, DK, EA, EE, EP, ES, FI, FR, GB, HR, HU, ID, IE, IL, IS, IT, JP, KR, LT, LU, LV, MA, MC, MD, MY, NL, NO, NZ, OA, PH, PL, PT, RO, RS, RU, SE, SG, SI, SK, SU, TH, TN, TR, TW, UA, VN, WO); FPRS; EPO; JPO; DERWENT; IBM_TDB)	WITH	ON	ON	2023/01/12 12:57 PM
L25	32	L24 AND (control$4 smok$3 power)	(US-PGPUB; USPAT; USOCR; FIT (AP, AT, AU, BE, BG, BR, BY, CA, CH, CN, CS, CU, CZ, DD, DE, DK, EA, EE, EP, ES, FI, FR, GB, HR, HU, ID, IE, IL, IS, IT, JP, KR, LT, LU, LV, MA, MC, MD, MY, NL, NO, NZ, OA, PH, PL, PT, RO, RS, RU, SE,	WITH	ON	ON	2023/01/12 12:57 PM

			SG, SI, SK, SU, TH, TN, TR, TW, UA, VN, WO); FPRS; EPO; JPO; DERWENT; IBM_TDB)				
L26	1099	L23 AND ((microwave NEAR oven) SAME refrigerator)	(US-PGPUB; USPAT; USOCR; FIT (AP, AT, AU, BE, BG, BR, BY, CA, CH, CN, CS, CU, CZ, DD, DE, DK, EA, EE, EP, ES, FI, FR, GB, HR, HU, ID, IE, IL, IS, IT, JP, KR, LT, LU, LV, MA, MC, MD, MY, NL, NO, NZ, OA, PH, PL, PT, RO, RS, RU, SE, SG, SI, SK, SU, TH, TN, TR, TW, UA, VN, WO); FPRS; EPO; JPO; DERWENT; IBM_TDB)	WITH	ON	ON	2023/01/12 01:01 PM
L27	40	L26 AND ((smok$3 OR vapor$4) (sens$3 OR detect$3))	(US-PGPUB; USPAT; USOCR; FIT (AP, AT, AU, BE, BG, BR, BY, CA, CH, CN, CS, CU, CZ, DD, DE, DK, EA, EE, EP, ES, FI, FR, GB, HR, HU, ID, IE, IL, IS, IT, JP, KR, LT, LU, LV, MA, MC, MD, MY, NL, NO, NZ, OA, PH, PL, PT, RO, RS, RU, SE, SG, SI, SK, SU, TH, TN, TR, TW, UA, VN, WO); FPRS; EPO; JPO; DERWENT; IBM_TDB)	WITH	ON	ON	2023/01/12 01:02 PM
L28	20	L27 AND (control$4 smok$3 power)	(US-PGPUB; USPAT; USOCR; FIT (AP, AT, AU, BE, BG, BR, BY, CA, CH, CN, CS, CU, CZ, DD, DE, DK, EA, EE, EP, ES, FI, FR, GB, HR, HU, ID, IE, IL, IS, IT, JP, KR, LT, LU, LV, MA, MC, MD, MY, NL, NO, NZ, OA, PH, PL, PT, RO, RS, RU, SE, SG, SI, SK, SU, TH, TN, TR, TW, UA, VN, WO); FPRS; EPO; JPO; DERWENT; IBM_TDB)	WITH	ON	ON	2023/01/12 01:02 PM
L29	30	L23 AND (microwave NEAR oven) AND (refrigerator) AND ((safe$4 OR security)	(US-PGPUB; USPAT; USOCR; FIT (AP, AT, AU, BE, BG, BR, BY, CA, CH, CN, CS, CU,	WITH	ON	ON	2023/01/12 01:07 PM

		box)	CZ, DD, DE, DK, EA, EE, EP, ES, FI, FR, GB, HR, HU, ID, IE, IL, IS, IT, JP, KR, LT, LU, LV, MA, MC, MD, MY, NL, NO, NZ, OA, PH, PL, PT, RO, RS, RU, SE, SG, SI, SK, SU, TH, TN, TR, TW, UA, VN, WO); FPRS; EPO; JPO; DERWENT; IBM_TDB)				
L30	0	L29 AND ((smok$3 OR vapor$4) (sens$3 OR detect$3))	(US-PGPUB; USPAT; USOCR; FIT (AP, AT, AU, BE, BG, BR, BY, CA, CH, CN, CS, CU, CZ, DD, DE, DK, EA, EE, EP, ES, FI, FR, GB, HR, HU, ID, IE, IL, IS, IT, JP, KR, LT, LU, LV, MA, MC, MD, MY, NL, NO, NZ, OA, PH, PL, PT, RO, RS, RU, SE, SG, SI, SK, SU, TH, TN, TR, TW, UA, VN, WO); FPRS; EPO; JPO; DERWENT; IBM_TDB)	WITH	ON	ON	2023/01/12 01:08 PM
L31	591	L23 AND (microwave NEAR oven) AND (refrigerator) AND ((safe$4 OR security))	(US-PGPUB; USPAT; USOCR; FIT (AP, AT, AU, BE, BG, BR, BY, CA, CH, CN, CS, CU, CZ, DD, DE, DK, EA, EE, EP, ES, FI, FR, GB, HR, HU, ID, IE, IL, IS, IT, JP, KR, LT, LU, LV, MA, MC, MD, MY, NL, NO, NZ, OA, PH, PL, PT, RO, RS, RU, SE, SG, SI, SK, SU, TH, TN, TR, TW, UA, VN, WO); FPRS; EPO; JPO; DERWENT; IBM_TDB)	WITH	ON	ON	2023/01/12 01:09 PM
L33	45	L31 AND ((smok$3 OR vapor$4) (sens$3 OR detect$3))	(US-PGPUB; USPAT; USOCR; FIT (AP, AT, AU, BE, BG, BR, BY, CA, CH, CN, CS, CU, CZ, DD, DE, DK, EA, EE, EP, ES, FI, FR, GB, HR, HU, ID, IE, IL, IS, IT, JP, KR, LT, LU, LV, MA, MC, MD, MY, NL, NO, NZ, OA, PH, PL, PT, RO, RS, RU, SE, SG, SI, SK, SU, TH, TN, TR, TW, UA, VN,	WITH	ON	ON	2023/01/12 01:09 PM

			WO); FPRS; EPO; JPO; DERWENT; IBM_TDB)				
L34	100060	(microwave NEAR oven) AND (refrigerator)	(US-PGPUB; USPAT; USOCR; FIT (AP, AT, AU, BE, BG, BR, BY, CA, CH, CN, CS, CU, CZ, DD, DE, DK, EA, EE, EP, ES, FI, FR, GB, HR, HU, ID, IE, IL, IS, IT, JP, KR, LT, LU, LV, MA, MC, MD, MY, NL, NO, NZ, OA, PH, PL, PT, RO, RS, RU, SE, SG, SI, SK, SU, TH, TN, TR, TW, UA, VN, WO); FPRS; EPO; JPO; DERWENT; IBM_TDB)	WITH	ON	ON	2023/01/12 01:26 PM
L35	6506	L34 AND ((smok$3 OR vapor$4) (sens$3 OR detect$3))	(US-PGPUB; USPAT; USOCR; FIT (AP, AT, AU, BE, BG, BR, BY, CA, CH, CN, CS, CU, CZ, DD, DE, DK, EA, EE, EP, ES, FI, FR, GB, HR, HU, ID, IE, IL, IS, IT, JP, KR, LT, LU, LV, MA, MC, MD, MY, NL, NO, NZ, OA, PH, PL, PT, RO, RS, RU, SE, SG, SI, SK, SU, TH, TN, TR, TW, UA, VN, WO); FPRS; EPO; JPO; DERWENT; IBM_TDB)	WITH	ON	ON	2023/01/12 01:27 PM
L36	300	L35 AND (control$4 smok$3 cook$3 power)	(US-PGPUB; USPAT; USOCR; FIT (AP, AT, AU, BE, BG, BR, BY, CA, CH, CN, CS, CU, CZ, DD, DE, DK, EA, EE, EP, ES, FI, FR, GB, HR, HU, ID, IE, IL, IS, IT, JP, KR, LT, LU, LV, MA, MC, MD, MY, NL, NO, NZ, OA, PH, PL, PT, RO, RS, RU, SE, SG, SI, SK, SU, TH, TN, TR, TW, UA, VN, WO); FPRS; EPO; JPO; DERWENT; IBM_TDB)	WITH	ON	ON	2023/01/12 01:28 PM
L37	38	L35 AND (control$4 smok$3 (terminat$3 OR withdraw$3 OR end$3) power)	(US-PGPUB; USPAT; USOCR; FIT (AP, AT, AU, BE, BG, BR, BY, CA, CH, CN, CS, CU, CZ, DD, DE, DK, EA, EE, EP, ES, FI, FR, GB,	WITH	ON	ON	2023/01/12 01:31 PM

			HR, HU, ID, IE, IL, IS, IT, JP, KR, LT, LU, LV, MA, MC, MD, MY, NL, NO, NZ, OA, PH, PL, PT, RO, RS, RU, SE, SG, SI, SK, SU, TH, TN, TR, TW, UA, VN, WO); FPRS; EPO; JPO; DERWENT; IBM_TDB)				
L38	12218	(microwave NEAR oven) AND ((smok$3 OR vapor$4) (sens$3 OR detect$3))	(US-PGPUB; USPAT; USOCR; FIT (AP, AT, AU, BE, BG, BR, BY, CA, CH, CN, CS, CU, CZ, DD, DE, DK, EA, EE, EP, ES, FI, FR, GB, HR, HU, ID, IE, IL, IS, IT, JP, KR, LT, LU, LV, MA, MC, MD, MY, NL, NO, NZ, OA, PH, PL, PT, RO, RS, RU, SE, SG, SI, SK, SU, TH, TN, TR, TW, UA, VN, WO); FPRS; EPO; JPO; DERWENT; IBM_TDB)	WITH	ON	ON	2023/01/12 02:34 PM
L39	82	L38 AND (control$4 smok$3 (terminat$3 OR withdraw$3 OR end$3) power)	(US-PGPUB; USPAT; USOCR; FIT (AP, AT, AU, BE, BG, BR, BY, CA, CH, CN, CS, CU, CZ, DD, DE, DK, EA, EE, EP, ES, FI, FR, GB, HR, HU, ID, IE, IL, IS, IT, JP, KR, LT, LU, LV, MA, MC, MD, MY, NL, NO, NZ, OA, PH, PL, PT, RO, RS, RU, SE, SG, SI, SK, SU, TH, TN, TR, TW, UA, VN, WO); FPRS; EPO; JPO; DERWENT; IBM_TDB)	WITH	ON	ON	2023/01/12 02:34 PM
L40	22	L39 AND (magnetron) AND (chamber OR cavity)	(US-PGPUB; USPAT; USOCR; FIT (AP, AT, AU, BE, BG, BR, BY, CA, CH, CN, CS, CU, CZ, DD, DE, DK, EA, EE, EP, ES, FI, FR, GB, HR, HU, ID, IE, IL, IS, IT, JP, KR, LT, LU, LV, MA, MC, MD, MY, NL, NO, NZ, OA, PH, PL, PT, RO, RS, RU, SE, SG, SI, SK, SU, TH, TN, TR, TW, UA, VN, WO); FPRS; EPO; JPO; DERWENT;	WITH	ON	ON	2023/01/12 02:36 PM

			IBM_TDB)				
L41	24	L39 AND (magnetron) AND (chamber OR cavity OR (cook$3 area))	(US-PGPUB; USPAT; USOCR; FIT (AP, AT, AU, BE, BG, BR, BY, CA, CH, CN, CS, CU, CZ, DD, DE, DK, EA, EE, EP, ES, FI, FR, GB, HR, HU, ID, IE, IL, IS, IT, JP, KR, LT, LU, LV, MA, MC, MD, MY, NL, NO, NZ, OA, PH, PL, PT, RO, RS, RU, SE, SG, SI, SK, SU, TH, TN, TR, TW, UA, VN, WO); FPRS; EPO; JPO; DERWENT; IBM_TDB)	WITH	ON	ON	2023/01/12 02:36 PM

PE2E SEARCH - Search History (Interference)

There are no Interference searches to show.

Doc code: IDS
Doc description: Information Disclosure Statement (IDS) Filed

PTO/SB/08a (01-22)
Approved for use through 05/31/2024. OMB 0651-0031
U.S. Patent and Trademark Office; U.S. DEPARTMENT OF COMMERCE
Under the Paperwork Reduction Act of 1995, no persons are required to respond to a collection of information unless it contains a valid OMB control number.

INFORMATION DISCLOSURE STATEMENT BY APPLICANT

(Not for submission under 37 CFR 1.99)

Application Number	17691628
Filing Date	2022-03-10
First Named Inventor	Gregory Allan Thomas Hall
Art Unit	3761
Examiner Name	
Attorney Docket Number	INT-1001 CIP 2 C 4

U.S.PATENTS Remove

Examiner Initial*	Cite No	Patent Number	Kind Code[1]	Issue Date	Name of Patentee or Applicant of cited Document	Pages,Columns,Lines where Relevant Passages or Relevant Figures Appear
	1	4,383,158		1983-05-10	Takeshi Niwa	
	2	5,744,785		1998-04-28	Charng-Gwon Lee	
	3	10,009,965		2018-06-26	Hyun Sook Kim, et al.	

If you wish to add additional U.S. Patent citation information please click the Add button. Add

U.S.PATENT APPLICATION PUBLICATIONS Remove

Examiner Initial*	Cite No	Publication Number	Kind Code[1]	Publication Date	Name of Patentee or Applicant of cited Document	Pages,Columns,Lines where Relevant Passages or Relevant Figures Appear
	1					

If you wish to add additional U.S. Published Application citation information please click the Add button. Add

FOREIGN PATENT DOCUMENTS Remove

Examiner Initial*	Cite No	Foreign Document Number[3]	Country Code[2] i	Kind Code[4]	Publication Date	Name of Patentee or Applicant of cited Document	Pages,Columns,Lines where Relevant Passages or Relevant Figures Appear	T[5]
	1	DE 197 06 186	DE	A1	1998-08-20	Miele & Cie GmbH & Co.		X

ALL REFERENCES CONSIDERED EXCEPT WHERE LINED THROUGH. /H.D.N/

INFORMATION DISCLOSURE STATEMENT BY APPLICANT (Not for submission under 37 CFR 1.99)		
	Application Number	17691628
	Filing Date	2022-03-10
	First Named Inventor	Gregory Allan Thomas Hall
	Art Unit	3761
	Examiner Name	
	Attorney Docket Number	INT-1001 CIP 2 C 4

	2	DE 42 43 004	DE	A1	1993-06-24	Miele & Cie GmbH & Co.		☒

If you wish to add additional Foreign Patent Document citation information please click the Add button Add

NON-PATENT LITERATURE DOCUMENTS Remove

Examiner Initials*	Cite No	Include name of the author (in CAPITAL LETTERS), title of the article (when appropriate), title of the item (book, magazine, journal, serial, symposium, catalog, etc), date, pages(s), volume-issue number(s), publisher, city and/or country where published.	T[5]
	1		

If you wish to add additional non-patent literature document citation information please click the Add button Add

EXAMINER SIGNATURE

Examiner Signature	/HUNG D NGUYEN/	Date Considered	01/12/2023

*EXAMINER: Initial if reference considered, whether or not citation is in conformance with MPEP 609. Draw line through a citation if not in conformance and not considered. Include copy of this form with next communication to applicant.

[1] See Kind Codes of USPTO Patent Documents at www.USPTO.GOV or MPEP 901.04. [2] Enter office that issued the document, by the two-letter code (WIPO Standard ST.3). [3] For Japanese patent documents, the indication of the year of the reign of the Emperor must precede the serial number of the patent document. [4] Kind of document by the appropriate symbols as indicated on the document under WIPO Standard ST.16 if possible. [5] Applicant is to place a check mark here if English language translation is attached.

INFORMATION DISCLOSURE STATEMENT BY APPLICANT (Not for submission under 37 CFR 1.99)		
	Application Number	17691628
	Filing Date	2022-03-10
	First Named Inventor	Gregory Allan Thomas Hall
	Art Unit	3761
	Examiner Name	
	Attorney Docket Number	INT-1001 CIP 2 C 4

CERTIFICATION STATEMENT

Please see 37 CFR 1.97 and 1.98 to make the appropriate selection(s):

That each item of information contained in the information disclosure statement was first cited in any communication from a foreign patent office in a counterpart foreign application not more than three months prior to the filing of the information disclosure statement. See 37 CFR 1.97(e)(1).

OR

☐ That no item of information contained in the information disclosure statement was cited in a communication from a foreign patent office in a counterpart foreign application, and, to the knowledge of the person signing the certification after making reasonable inquiry, no item of information contained in the information disclosure statement was known to any individual designated in 37 CFR 1.56(c) more than three months prior to the filing of the information disclosure statement. See 37 CFR 1.97(e)(2).

See attached certification statement.

The fee set forth in 37 CFR 1.17 (p) has been submitted herewith.

☒ A certification statement is not submitted herewith.

SIGNATURE

A signature of the applicant or representative is required in accordance with CFR 1.33, 10.18. Please see CFR 1.4(d) for the form of the signature.

Signature	/Ralph E. Jocke/	Date (YYYY-MM-DD)	2022-04-19
Name/Print	Ralph E. Jocke	Registration Number	31,029

This collection of information is required by 37 CFR 1.97 and 1.98. The information is required to obtain or retain a benefit by the public which is to file (and by the USPTO to process) an application. Confidentiality is governed by 35 U.S.C. 122 and 37 CFR 1.14. This collection is estimated to take 1 hour to complete, including gathering, preparing and submitting the completed application form to the USPTO. Time will vary depending upon the individual case. Any comments on the amount of time you require to complete this form and/or suggestions for reducing this burden, should be sent to the Chief Information Officer, U.S. Patent and Trademark Office, U.S. Department of Commerce, P.O. Box 1450, Alexandria, VA 22313-1450. DO NOT SEND FEES OR COMPLETED FORMS TO THIS ADDRESS. **SEND TO: Commissioner for Patents, P.O. Box 1450, Alexandria, VA 22313-1450.**

Privacy Act Statement

The Privacy Act of 1974 (P.L. 93-579) requires that you be given certain information in connection with your submission of the attached form related to a patent application or patent. Accordingly, pursuant to the requirements of the Act, please be advised that: (1) the general authority for the collection of this information is 35 U.S.C. 2(b)(2); (2) furnishing of the information solicited is voluntary; and (3) the principal purpose for which the information is used by the U.S. Patent and Trademark Office is to process and/or examine your submission related to a patent application or patent. If you do not furnish the requested information, the U.S. Patent and Trademark Office may not be able to process and/or examine your submission, which may result in termination of proceedings or abandonment of the application or expiration of the patent.

The information provided by you in this form will be subject to the following routine uses:

1. The information on this form will be treated confidentially to the extent allowed under the Freedom of Information Act (5 U.S.C. 552) and the Privacy Act (5 U.S.C. 552a). Records from this system of records may be disclosed to the Department of Justice to determine whether the Freedom of Information Act requires disclosure of these record s.

2. A record from this system of records may be disclosed, as a routine use, in the course of presenting evidence to a court, magistrate, or administrative tribunal, including disclosures to opposing counsel in the course of settlement negotiations.

3. A record in this system of records may be disclosed, as a routine use, to a Member of Congress submitting a request involving an individual, to whom the record pertains, when the individual has requested assistance from the Member with respect to the subject matter of the record.

4. A record in this system of records may be disclosed, as a routine use, to a contractor of the Agency having need for the information in order to perform a contract. Recipients of information shall be required to comply with the requirements of the Privacy Act of 1974, as amended, pursuant to 5 U.S.C. 552a(m).

5. A record related to an International Application filed under the Patent Cooperation Treaty in this system of records may be disclosed, as a routine use, to the International Bureau of the World Intellectual Property Organization, pursuant to the Patent Cooperation Treaty.

6. A record in this system of records may be disclosed, as a routine use, to another federal agency for purposes of National Security review (35 U.S.C. 181) and for review pursuant to the Atomic Energy Act (42 U.S.C. 218(c)).

7. A record from this system of records may be disclosed, as a routine use, to the Administrator, General Services, or his/her designee, during an inspection of records conducted by GSA as part of that agency's responsibility to recommend improvements in records management practices and programs, under authority of 44 U.S.C. 2904 and 2906. Such disclosure shall be made in accordance with the GSA regulations governing inspection of records for this purpose, and any other relevant (i.e., GSA or Commerce) directive. Such disclosure shall not be used to make determinations about individuals.

8. A record from this system of records may be disclosed, as a routine use, to the public after either publication of the application pursuant to 35 U.S.C. 122(b) or issuance of a patent pursuant to 35 U.S.C. 151. Further, a record may be disclosed, subject to the limitations of 37 CFR 1.14, as a routine use, to the public if the record was filed in an application which became abandoned or in which the proceedings were terminated and which application is referenced by either a published application, an application open to public inspections or an issued patent.

9. A record from this system of records may be disclosed, as a routine use, to a Federal, State, or local law enforcement agency, if the USPTO becomes aware of a violation or potential violation of law or regulation.

ALL REFERENCES CONSIDERED EXCEPT WHERE LINED THROUGH. /H.D.N/

Doc code: IDS
Doc description: Information Disclosure Statement (IDS) Filed

PTO/SB/08a (01-22)
Approved for use through 05/31/2024. OMB 0651-0031
U.S. Patent and Trademark Office; U.S. DEPARTMENT OF COMMERCE
Under the Paperwork Reduction Act of 1995, no persons are required to respond to a collection of information unless it contains a valid OMB control number.

INFORMATION DISCLOSURE STATEMENT BY APPLICANT

(Not for submission under 37 CFR 1.99)

Application Number	17691628
Filing Date	2022-03-10
First Named Inventor	Gregory Allan Thomas Hall
Art Unit	3761
Examiner Name	
Attorney Docket Number	INT-1001 CIP 2 C 4

U.S.PATENTS

Examiner Initial*	Cite No	Patent Number	Kind Code[1]	Issue Date	Name of Patentee or Applicant of cited Document	Pages,Columns,Lines where Relevant Passages or Relevant Figures Appear
	1	5493119		1996-02-20	Torngren	

If you wish to add additional U.S. Patent citation information please click the Add button.

U.S.PATENT APPLICATION PUBLICATIONS

Examiner Initial*	Cite No	Publication Number	Kind Code[1]	Publication Date	Name of Patentee or Applicant of cited Document	Pages,Columns,Lines where Relevant Passages or Relevant Figures Appear
	1					

If you wish to add additional U.S. Published Application citation information please click the Add button.

FOREIGN PATENT DOCUMENTS

Examiner Initial*	Cite No	Foreign Document Number[3]	Country Code[2] ¡	Kind Code[4]	Publication Date	Name of Patentee or Applicant of cited Document	Pages,Columns,Lines where Relevant Passages or Relevant Figures Appear	T[5]
	1							☐

If you wish to add additional Foreign Patent Document citation information please click the Add button

NON-PATENT LITERATURE DOCUMENTS

Examiner Initials*	Cite No	Include name of the author (in CAPITAL LETTERS), title of the article (when appropriate), title of the item (book, magazine, journal, serial, symposium, catalog, etc), date, pages(s), volume-issue number(s), publisher, city and/or country where published.	T[5]

INFORMATION DISCLOSURE STATEMENT BY APPLICANT (Not for submission under 37 CFR 1.99)		
	Application Number	17691628
	Filing Date	2022-03-10
	First Named Inventor	Gregory Allan Thomas Hall
	Art Unit	3761
	Examiner Name	
	Attorney Docket Number	INT-1001 CIP 2 C 4

	1		☐

If you wish to add additional non-patent literature document citation information please click the Add button

EXAMINER SIGNATURE

Examiner Signature	/HUNG D NGUYEN/	Date Considered	01/12/2023

*EXAMINER: Initial if reference considered, whether or not citation is in conformance with MPEP 609. Draw line through a citation if not in conformance and not considered. Include copy of this form with next communication to applicant.

[1] See Kind Codes of USPTO Patent Documents at www.USPTO.GOV or MPEP 901.04. [2] Enter office that issued the document, by the two-letter code (WIPO Standard ST.3). [3] For Japanese patent documents, the indication of the year of the reign of the Emperor must precede the serial number of the patent document. [4] Kind of document by the appropriate symbols as indicated on the document under WIPO Standard ST.16 if possible. [5] Applicant is to place a check mark here if English language translation is attached.

INFORMATION DISCLOSURE STATEMENT BY APPLICANT (Not for submission under 37 CFR 1.99)		
	Application Number	17691628
	Filing Date	2022-03-10
	First Named Inventor	Gregory Allan Thomas Hall
	Art Unit	3761
	Examiner Name	
	Attorney Docket Number	INT-1001 CIP 2 C 4

CERTIFICATION STATEMENT

Please see 37 CFR 1.97 and 1.98 to make the appropriate selection(s):

☐ That each item of information contained in the information disclosure statement was first cited in any communication from a foreign patent office in a counterpart foreign application not more than three months prior to the filing of the information disclosure statement. See 37 CFR 1.97(e)(1).

OR

☐ That no item of information contained in the information disclosure statement was cited in a communication from a foreign patent office in a counterpart foreign application, and, to the knowledge of the person signing the certification after making reasonable inquiry, no item of information contained in the information disclosure statement was known to any individual designated in 37 CFR 1.56(c) more than three months prior to the filing of the information disclosure statement. See 37 CFR 1.97(e)(2).

☐ See attached certification statement.

☐ The fee set forth in 37 CFR 1.17 (p) has been submitted herewith.

☒ A certification statement is not submitted herewith.

SIGNATURE

A signature of the applicant or representative is required in accordance with CFR 1.33, 10.18. Please see CFR 1.4(d) for the form of the signature.

Signature	/Ralph E. Jocke/	Date (YYYY-MM-DD)	2022-11-15
Name/Print	Ralph E. Jocke	Registration Number	31,029

This collection of information is required by 37 CFR 1.97 and 1.98. The information is required to obtain or retain a benefit by the public which is to file (and by the USPTO to process) an application. Confidentiality is governed by 35 U.S.C. 122 and 37 CFR 1.14. This collection is estimated to take 1 hour to complete, including gathering, preparing and submitting the completed application form to the USPTO. Time will vary depending upon the individual case. Any comments on the amount of time you require to complete this form and/or suggestions for reducing this burden, should be sent to the Chief Information Officer, U.S. Patent and Trademark Office, U.S. Department of Commerce, P.O. Box 1450, Alexandria, VA 22313-1450. DO NOT SEND FEES OR COMPLETED FORMS TO THIS ADDRESS. **SEND TO: Commissioner for Patents, P.O. Box 1450, Alexandria, VA 22313-1450.**

Privacy Act Statement

The Privacy Act of 1974 (P.L. 93-579) requires that you be given certain information in connection with your submission of the attached form related to a patent application or patent. Accordingly, pursuant to the requirements of the Act, please be advised that: (1) the general authority for the collection of this information is 35 U.S.C. 2(b)(2); (2) furnishing of the information solicited is voluntary; and (3) the principal purpose for which the information is used by the U.S. Patent and Trademark Office is to process and/or examine your submission related to a patent application or patent. If you do not furnish the requested information, the U.S. Patent and Trademark Office may not be able to process and/or examine your submission, which may result in termination of proceedings or abandonment of the application or expiration of the patent.

The information provided by you in this form will be subject to the following routine uses:

1. The information on this form will be treated confidentially to the extent allowed under the Freedom of Information Act (5 U.S.C. 552) and the Privacy Act (5 U.S.C. 552a). Records from this system of records may be disclosed to the Department of Justice to determine whether the Freedom of Information Act requires disclosure of these record s.

2. A record from this system of records may be disclosed, as a routine use, in the course of presenting evidence to a court, magistrate, or administrative tribunal, including disclosures to opposing counsel in the course of settlement negotiations.

3. A record in this system of records may be disclosed, as a routine use, to a Member of Congress submitting a request involving an individual, to whom the record pertains, when the individual has requested assistance from the Member with respect to the subject matter of the record.

4. A record in this system of records may be disclosed, as a routine use, to a contractor of the Agency having need for the information in order to perform a contract. Recipients of information shall be required to comply with the requirements of the Privacy Act of 1974, as amended, pursuant to 5 U.S.C. 552a(m).

5. A record related to an International Application filed under the Patent Cooperation Treaty in this system of records may be disclosed, as a routine use, to the International Bureau of the World Intellectual Property Organization, pursuant to the Patent Cooperation Treaty.

6. A record in this system of records may be disclosed, as a routine use, to another federal agency for purposes of National Security review (35 U.S.C. 181) and for review pursuant to the Atomic Energy Act (42 U.S.C. 218(c)).

7. A record from this system of records may be disclosed, as a routine use, to the Administrator, General Services, or his/her designee, during an inspection of records conducted by GSA as part of that agency's responsibility to recommend improvements in records management practices and programs, under authority of 44 U.S.C. 2904 and 2906. Such disclosure shall be made in accordance with the GSA regulations governing inspection of records for this purpose, and any other relevant (i.e., GSA or Commerce) directive. Such disclosure shall not be used to make determinations about individuals.

8. A record from this system of records may be disclosed, as a routine use, to the public after either publication of the application pursuant to 35 U.S.C. 122(b) or issuance of a patent pursuant to 35 U.S.C. 151. Further, a record may be disclosed, subject to the limitations of 37 CFR 1.14, as a routine use, to the public if the record was filed in an application which became abandoned or in which the proceedings were terminated and which application is referenced by either a published application, an application open to public inspections or an issued patent.

9. A record from this system of records may be disclosed, as a routine use, to a Federal, State, or local law enforcement agency, if the USPTO becomes aware of a violation or potential violation of law or regulation.

IN THE UNITED STATES PATENT AND TRADEMARK OFFICE

First Named Inventor:		)	
	Gregory Allan Thomas Hall	)	
		)	**Art Unit 3761**
Serial No.:	**17/691,628**	)	
		)	**Primary Examiner**
		)	**Hung D. Nguyen**
Filed:	**March 10, 2022**	)	
		)	
		)	
Conf.	**4539**	)	

Title: Multiple Linked Appliance With Auxiliary Outlet

Commissioner for Patents
P.O. Box 1450
Alexandria, VA 22313-1450

Response to Ex Parte Quayle Action

Sir:

Applicant hereby responds to the Ex Parte Quayle Action dated January 17, 2023.

Remarks begin on page 2.

REMARKS

Claim Status

In the Action claims 1 – 24 were indicated to recite allowable subject matter. The acknowledgment of allowable subject matter by the Office is appreciated.

Drawing Objection

In the Action the drawings were objected to pursuant to 37 CFR §1.83 (a) for failure to disclose a "safe" as recited in the claims. Applicant respectfully traverses this objection.

37 CFR §1.57 (c) and (d) authorizes "essential material" to be incorporated by reference in a patent application. "Essential material" includes material necessary to describe the claimed invention. 37 CFR §1.57 (c) explicitly allows incorporation of essential material that is set forth in a US Patent Publication.

In the present Application on page 31, Paragraph 0088, US Patent Publication 2017-0059233 is incorporated by reference in its entirety. This Patent Publication discloses an apparatus including a microwave oven, a refrigerator and a safe. For example, Figures 1 and 2 of the incorporated publication show a combined appliance with a safe (16), and Figure 5 shows a combined appliance with a safe (64).

As Applicant has properly incorporated by reference in the current Application, US Patent Publication 2017-0059233 which discloses an appliance including a safe, it is respectfully submitted that the recited "safe" and other claim features are fully supported by the disclosure in the pending Application. Applicant respectfully requests that the objection be withdrawn.

Authorization To Charge Fees

It is believed that no fee should be due upon the submission of this Response. However, if any fees are due authorization is hereby given to charge the fees to Deposit Account 10-0637.

Conclusion

Favorable consideration of the Application and a Notice of Allowance thereof is respectfully requested. The undersigned will be happy to discuss any aspect of the Application by telephone at the Office's convenience.

Respectfully submitted,

/Ralph E. Jocke/
Ralph E. Jocke, Reg. No. 31,029
Walker & Jocke Co., LPA
231 South Broadway
Medina, OH 44256
(330) 721-0000
Customer No. 07733

Electronic Acknowledgement Receipt

EFS ID:	47447567
Application Number:	17691628
International Application Number:	
Confirmation Number:	4539
Title of Invention:	MULTIPLE LINKED APPLIANCE WITH AUXILIARY OUTLET
First Named Inventor/Applicant Name:	Gregory Allan Thomas Hall
Customer Number:	7733
Filer:	Ralph E. Jocke/Amy Barnes
Filer Authorized By:	Ralph E. Jocke
Attorney Docket Number:	INT-1001 CIP 2 C 4
Receipt Date:	31-JAN-2023
Filing Date:	10-MAR-2022
Time Stamp:	15:47:47
Application Type:	Utility under 35 USC 111(a)

Payment information:

Submitted with Payment	no

File Listing:

Document Number	Document Description	File Name	File Size(Bytes)/ Message Digest	Multi Part /.zip	Pages (if appl.)
1		Response_to_Ex_Parte_Quayle_Action.pdf	33597 4ca3910e12005efe8c6e95b732bf91633b9ce6c8	yes	3

	Multipart Description/PDF files in .zip description		
	Document Description	**Start**	**End**
	Response after Ex Parte Quayle Action	1	1
	Applicant Arguments/Remarks Made in an Amendment	2	3
Warnings:			
Information:			
	Total Files Size (in bytes):	33597	

This Acknowledgement Receipt evidences receipt on the noted date by the USPTO of the indicated documents, characterized by the applicant, and including page counts, where applicable. It serves as evidence of receipt similar to a Post Card, as described in MPEP 503.

New Applications Under 35 U.S.C. 111
If a new application is being filed and the application includes the necessary components for a filing date (see 37 CFR 1.53(b)-(d) and MPEP 506), a Filing Receipt (37 CFR 1.54) will be issued in due course and the date shown on this Acknowledgement Receipt will establish the filing date of the application.
National Stage of an International Application under 35 U.S.C. 371
If a timely submission to enter the national stage of an international application is compliant with the conditions of 35 U.S.C. 371 and other applicable requirements a Form PCT/DO/EO/903 indicating acceptance of the application as a national stage submission under 35 U.S.C. 371 will be issued in addition to the Filing Receipt, in due course.
New International Application Filed with the USPTO as a Receiving Office
If a new international application is being filed and the international application includes the necessary components for an international filing date (see PCT Article 11 and MPEP 1810), a Notification of the International Application Number and of the International Filing Date (Form PCT/RO/105) will be issued in due course, subject to prescriptions concerning national security, and the date shown on this Acknowledgement Receipt will establish the international filing date of the application.

UNITED STATES PATENT AND TRADEMARK OFFICE

UNITED STATES DEPARTMENT OF COMMERCE
United States Patent and Trademark Office
Address: COMMISSIONER FOR PATENTS
P.O. Box 1450
Alexandria, Virginia 22313-1450
www.uspto.gov

NOTICE OF ALLOWANCE AND FEE(S) DUE

7733 7590 04/14/2023
WALKER & JOCKE
231 SOUTH BROADWAY STREET
MEDINA, OH 44256

EXAMINER
NGUYEN, HUNG D

ART UNIT	PAPER NUMBER
3761	

DATE MAILED: 04/14/2023

APPLICATION NO.	FILING DATE	FIRST NAMED INVENTOR	ATTORNEY DOCKET NO.	CONFIRMATION NO.
17/691,628	03/10/2022	Gregory Allan Thomas Hall	INT-1001 CIP 2 C 4	4539

TITLE OF INVENTION: MULTIPLE LINKED APPLIANCE WITH AUXILIARY OUTLET

APPLN. TYPE	ENTITY STATUS	ISSUE FEE DUE	PUBLICATION FEE DUE	PREV. PAID ISSUE FEE	TOTAL FEE(S) DUE	DATE DUE
nonprovisional	SMALL	$480	$0.00	$0.00	$480	07/14/2023

THE APPLICATION IDENTIFIED ABOVE HAS BEEN EXAMINED AND IS ALLOWED FOR ISSUANCE AS A PATENT. PROSECUTION ON THE MERITS IS CLOSED. THIS NOTICE OF ALLOWANCE IS NOT A GRANT OF PATENT RIGHTS. THIS APPLICATION IS SUBJECT TO WITHDRAWAL FROM ISSUE AT THE INITIATIVE OF THE OFFICE OR UPON PETITION BY THE APPLICANT. SEE 37 CFR 1.313 AND MPEP 1308.

THE ISSUE FEE AND PUBLICATION FEE (IF REQUIRED) MUST BE PAID WITHIN THREE MONTHS FROM THE MAILING DATE OF THIS NOTICE OR THIS APPLICATION SHALL BE REGARDED AS ABANDONED. THIS STATUTORY PERIOD CANNOT BE EXTENDED. SEE 35 U.S.C. 151. THE ISSUE FEE DUE INDICATED ABOVE DOES NOT REFLECT A CREDIT FOR ANY PREVIOUSLY PAID ISSUE FEE IN THIS APPLICATION. IF AN ISSUE FEE HAS PREVIOUSLY BEEN PAID IN THIS APPLICATION (AS SHOWN ABOVE), THE RETURN OF PART B OF THIS FORM WILL BE CONSIDERED A REQUEST TO REAPPLY THE PREVIOUSLY PAID ISSUE FEE TOWARD THE ISSUE FEE NOW DUE.

HOW TO REPLY TO THIS NOTICE:

I. Review the ENTITY STATUS shown above. If the ENTITY STATUS is shown as SMALL or MICRO, verify whether entitlement to that entity status still applies.

If the ENTITY STATUS is the same as shown above, pay the TOTAL FEE(S) DUE shown above.

If the ENTITY STATUS is changed from that shown above, on PART B - FEE(S) TRANSMITTAL, complete section number 5 titled "Change in Entity Status (from status indicated above)".

For purposes of this notice, small entity fees are 40% the amount of undiscounted fees, and micro entity fees are 20% the amount of undiscounted fees.

II. PART B - FEE(S) TRANSMITTAL, or its equivalent, must be completed and returned to the United States Patent and Trademark Office (USPTO) with your ISSUE FEE and PUBLICATION FEE (if required). If you are charging the fee(s) to your deposit account, section "4b" of Part B - Fee(s) Transmittal should be completed. If an equivalent of Part B is filed, a request to reapply a previously paid issue fee must be clearly made, and delays in processing may occur due to the difficulty in recognizing the paper as an equivalent of Part B.

III. All communications regarding this application must give the application number. Please direct all communications prior to issuance to Mail Stop ISSUE FEE unless advised to the contrary.

IMPORTANT REMINDER: Maintenance fees are due in utility patents issuing on applications filed on or after Dec. 12, 1980. It is patentee's responsibility to ensure timely payment of maintenance fees when due. More information is available at www.uspto.gov/PatentMaintenanceFees.

PART B - FEE(S) TRANSMITTAL

Complete and send this form, together with applicable fee(s), by mail or fax, or via EFS-Web.

By mail, send to: Mail Stop ISSUE FEE
Commissioner for Patents
P.O. Box 1450
Alexandria, Virginia 22313-1450

By fax, send to: (571)-273-2885

INSTRUCTIONS: This form should be used for transmitting the ISSUE FEE and PUBLICATION FEE (if required). Blocks 1 through 5 should be completed where appropriate. All further correspondence will be mailed to the current correspondence address as indicated unless corrected below or directed otherwise in Block 1, by (a) specifying a new correspondence address; and/or (b) indicating a separate "FEE ADDRESS" for maintenance fee notifications. **Because electronic patent issuance may occur shortly after issue fee payment, any desired continuing application should preferably be filed prior to payment of this issue fee in order not to jeopardize copendency.**

CURRENT CORRESPONDENCE ADDRESS (Note: Use Block 1 for any change of address)

7733 7590 04/14/2023
WALKER & JOCKE
231 SOUTH BROADWAY STREET
MEDINA, OH 44256

Note: A certificate of mailing can only be used for domestic mailings of the Fee(s) Transmittal. This certificate cannot be used for any other accompanying papers. Each additional paper, such as an assignment or formal drawing, must have its own certificate of mailing or transmission.

Certificate of Mailing or Transmission

I hereby certify that this Fee(s) Transmittal is being deposited with the United States Postal Service with sufficient postage for first class mail in an envelope addressed to the Mail Stop ISSUE FEE address above, or being transmitted to the USPTO via EFS-Web or by facsimile to (571) 273-2885, on the date below.

(Typed or printed name)

(Signature)

(Date)

APPLICATION NO.	FILING DATE	FIRST NAMED INVENTOR	ATTORNEY DOCKET NO.	CONFIRMATION NO.
17/691,628	03/10/2022	Gregory Allan Thomas Hall	INT-1001 CIP 2 C 4	4539

TITLE OF INVENTION: MULTIPLE LINKED APPLIANCE WITH AUXILIARY OUTLET

APPLN. TYPE	ENTITY STATUS	ISSUE FEE DUE	PUBLICATION FEE DUE	PREV. PAID ISSUE FEE	TOTAL FEE(S) DUE	DATE DUE
nonprovisional	SMALL	$480	$0.00	$0.00	$480	07/14/2023

EXAMINER	ART UNIT	CLASS-SUBCLASS
NGUYEN, HUNG D	3761	219-720000

1. Change of correspondence address or indication of "Fee Address" (37 CFR 1.363).

❑ Change of correspondence address (or Change of Correspondence Address form PTO/AIA/122 or PTO/SB/122) attached.

❑ "Fee Address" indication (or "Fee Address" Indication form PTO/AIA/47 or PTO/SB/47; Rev 03-02 or more recent) attached. **Use of a Customer Number is required.**

2. For printing on the patent front page, list
(1) The names of up to 3 registered patent attorneys or agents OR, alternatively,
(2) The name of a single firm (having as a member a registered attorney or agent) and the names of up to 2 registered patent attorneys or agents. If no name is listed, no name will be printed.

1_____
2_____
3_____

3. ASSIGNEE NAME AND RESIDENCE DATA TO BE PRINTED ON THE PATENT (print or type)

PLEASE NOTE: Unless an assignee is identified below, no assignee data will appear on the patent. If an assignee is identified below, the document must have been previously recorded, or filed for recordation, as set forth in 37 CFR 3.11 and 37 CFR 3.81(a). Completion of this form is NOT a substitute for filing an assignment.

(A) NAME OF ASSIGNEE (B) RESIDENCE: (CITY and STATE OR COUNTRY)

Please check the appropriate assignee category or categories (will not be printed on the patent) : ❑ Individual ❑ Corporation or other private group entity ❑ Government

4a. Fees submitted: ❑Issue Fee ❑Publication Fee (if required)

4b. Method of Payment: *(Please first reapply any previously paid fee shown above)*

❑ Electronic Payment via Patent Center or EFS-Web ❑ Enclosed check ❑ Non-electronic payment by credit card (Attach form PTO-2038)

❑ The Director is hereby authorized to charge the required fee(s), any deficiency, or credit any overpayment to Deposit Account No. _____

5. **Change in Entity Status** (from status indicated above)

❑ Applicant certifying micro entity status. See 37 CFR 1.29

NOTE: Absent a valid certification of Micro Entity Status (see forms PTO/SB/15A and 15B), issue fee payment in the micro entity amount will not be accepted at the risk of application abandonment.

❑ Applicant asserting small entity status. See 37 CFR 1.27

NOTE: If the application was previously under micro entity status, checking this box will be taken to be a notification of loss of entitlement to micro entity status.

❑ Applicant changing to regular undiscounted fee status.

NOTE: Checking this box will be taken to be a notification of loss of entitlement to small or micro entity status, as applicable.

NOTE: This form must be signed in accordance with 37 CFR 1.31 and 1.33. See 37 CFR 1.4 for signature requirements and certifications.

Authorized Signature _____ Date _____

Typed or printed name _____ Registration No. _____

UNITED STATES DEPARTMENT OF COMMERCE
United States Patent and Trademark Office
Address: COMMISSIONER FOR PATENTS
P.O. Box 1450
Alexandria, Virginia 22313-1450
www.uspto.gov

APPLICATION NO.	FILING DATE	FIRST NAMED INVENTOR	ATTORNEY DOCKET NO.	CONFIRMATION NO.
17/691,628	03/10/2022	Gregory Allan Thomas Hall	INT-1001 CIP 2 C 4	4539

7733 7590 04/14/2023
WALKER & JOCKE
231 SOUTH BROADWAY STREET
MEDINA, OH 44256

EXAMINER
NGUYEN, HUNG D

ART UNIT	PAPER NUMBER
3761	

DATE MAILED: 04/14/2023

Determination of Patent Term Adjustment under 35 U.S.C. 154 (b)
(Applications filed on or after May 29, 2000)

The Office has discontinued providing a Patent Term Adjustment (PTA) calculation with the Notice of Allowance.

Section 1(h)(2) of the AIA Technical Corrections Act amended 35 U.S.C. 154(b)(3)(B)(i) to eliminate the requirement that the Office provide a patent term adjustment determination with the notice of allowance. See Revisions to Patent Term Adjustment, 78 Fed. Reg. 19416, 19417 (Apr. 1, 2013). Therefore, the Office is no longer providing an initial patent term adjustment determination with the notice of allowance. The Office will continue to provide a patent term adjustment determination with the Issue Notification Letter that is mailed to applicant approximately three weeks prior to the issue date of the patent, and will include the patent term adjustment on the patent. Any request for reconsideration of the patent term adjustment determination (or reinstatement of patent term adjustment) should follow the process outlined in 37 CFR 1.705.

Any questions regarding the Patent Term Extension or Adjustment determination should be directed to the Office of Patent Legal Administration at (571)-272-7702. Questions relating to issue and publication fee payments should be directed to the Customer Service Center of the Office of Patent Publication at 1-(888)-786-0101 or (571)-272-4200.

OMB Clearance and PRA Burden Statement for PTOL-85 Part B

The Paperwork Reduction Act (PRA) of 1995 requires Federal agencies to obtain Office of Management and Budget approval before requesting most types of information from the public. When OMB approves an agency request to collect information from the public, OMB (i) provides a valid OMB Control Number and expiration date for the agency to display on the instrument that will be used to collect the information and (ii) requires the agency to inform the public about the OMB Control Number's legal significance in accordance with 5 CFR 1320.5(b).

The information collected by PTOL-85 Part B is required by 37 CFR 1.311. The information is required to obtain or retain a benefit by the public which is to file (and by the USPTO to process) an application. Confidentiality is governed by 35 U.S.C. 122 and 37 CFR 1.14. This collection is estimated to take 30 minutes to complete, including gathering, preparing, and submitting the completed application form to the USPTO. Time will vary depending upon the individual case. Any comments on the amount of time you require to complete this form and/or suggestions for reducing this burden, should be sent to the Chief Information Officer, U.S. Patent and Trademark Office, U.S. Department of Commerce, P.O. Box 1450, Alexandria, Virginia 22313-1450. DO NOT SEND FEES OR COMPLETED FORMS TO THIS ADDRESS. SEND TO: Commissioner for Patents, P.O. Box 1450, Alexandria, Virginia 22313-1450. Under the Paperwork Reduction Act of 1995, no persons are required to respond to a collection of information unless it displays a valid OMB control number.

Privacy Act Statement

The Privacy Act of 1974 (P.L. 93-579) requires that you be given certain information in connection with your submission of the attached form related to a patent application or patent. Accordingly, pursuant to the requirements of the Act, please be advised that: (1) the general authority for the collection of this information is 35 U.S.C. 2(b)(2); (2) furnishing of the information solicited is voluntary; and (3) the principal purpose for which the information is used by the U.S. Patent and Trademark Office is to process and/or examine your submission related to a patent application or patent. If you do not furnish the requested information, the U.S. Patent and Trademark Office may not be able to process and/or examine your submission, which may result in termination of proceedings or abandonment of the application or expiration of the patent.

The information provided by you in this form will be subject to the following routine uses:

1. The information on this form will be treated confidentially to the extent allowed under the Freedom of Information Act (5 U.S.C. 552) and the Privacy Act (5 U.S.C 552a). Records from this system of records may be disclosed to the Department of Justice to determine whether disclosure of these records is required by the Freedom of Information Act.
2. A record from this system of records may be disclosed, as a routine use, in the course of presenting evidence to a court, magistrate, or administrative tribunal, including disclosures to opposing counsel in the course of settlement negotiations.
3. A record in this system of records may be disclosed, as a routine use, to a Member of Congress submitting a request involving an individual, to whom the record pertains, when the individual has requested assistance from the Member with respect to the subject matter of the record.
4. A record in this system of records may be disclosed, as a routine use, to a contractor of the Agency having need for the information in order to perform a contract. Recipients of information shall be required to comply with the requirements of the Privacy Act of 1974, as amended, pursuant to 5 U.S.C. 552a(m).
5. A record related to an International Application filed under the Patent Cooperation Treaty in this system of records may be disclosed, as a routine use, to the International Bureau of the World Intellectual Property Organization, pursuant to the Patent Cooperation Treaty.
6. A record in this system of records may be disclosed, as a routine use, to another federal agency for purposes of National Security review (35 U.S.C. 181) and for review pursuant to the Atomic Energy Act (42 U.S.C. 218(c)).
7. A record from this system of records may be disclosed, as a routine use, to the Administrator, General Services, or his/her designee, during an inspection of records conducted by GSA as part of that agency's responsibility to recommend improvements in records management practices and programs, under authority of 44 U.S.C. 2904 and 2906. Such disclosure shall be made in accordance with the GSA regulations governing inspection of records for this purpose, and any other relevant (i.e., GSA or Commerce) directive. Such disclosure shall not be used to make determinations about individuals.
8. A record from this system of records may be disclosed, as a routine use, to the public after either publication of the application pursuant to 35 U.S.C. 122(b) or issuance of a patent pursuant to 35 U.S.C. 151. Further, a record may be disclosed, subject to the limitations of 37 CFR 1.14, as a routine use, to the public if the record was filed in an application which became abandoned or in which the proceedings were terminated and which application is referenced by either a published application, an application open to public inspection or an issued patent.
9. A record from this system of records may be disclosed, as a routine use, to a Federal, State, or local law enforcement agency, if the USPTO becomes aware of a violation or potential violation of law or regulation.

Notice of Allowability	Application No. 17/691,628	Applicant(s) Hall et al.	
	Examiner HUNG D NGUYEN	Art Unit 3761	AIA (FITF) Status Yes

-- The MAILING DATE of this communication appears on the cover sheet with the correspondence address--

All claims being allowable, PROSECUTION ON THE MERITS IS (OR REMAINS) CLOSED in this application. If not included herewith (or previously mailed), a Notice of Allowance (PTOL-85) or other appropriate communication will be mailed in due course. **THIS NOTICE OF ALLOWABILITY IS NOT A GRANT OF PATENT RIGHTS.** This application is subject to withdrawal from issue at the initiative of the Office or upon petition by the applicant. See 37 CFR 1.313 and MPEP 1308.

1. ☑ This communication is responsive to 1/31/2023.
   ☐ A declaration(s)/affidavit(s) under **37 CFR 1.130(b)** was/were filed on _____.

2. ☐ An election was made by the applicant in response to a restriction requirement set forth during the interview on _____; the restriction requirement and election have been incorporated into this action.

3. ☑ The allowed claim(s) is/are 1-24 . As a result of the allowed claim(s), you may be eligible to benefit from the **Patent Prosecution Highway** program at a participating intellectual property office for the corresponding application. For more information, please see **http://www.uspto.gov/patents/init_events/pph/index.jsp** or send an inquiry to **PPHfeedback@uspto.gov.**

4. ☐ Acknowledgment is made of a claim for foreign priority under 35 U.S.C. § 119(a)-(d) or (f).

   Certified copies:

   a) ☐ All b) ☐ Some* c) ☐ None of the:

   1. ☐ Certified copies of the priority documents have been received.
   2. ☐ Certified copies of the priority documents have been received in Application No. _____ .
   3. ☐ Copies of the certified copies of the priority documents have been received in this national stage application from the International Bureau (PCT Rule 17.2(a)).

   * Certified copies not received: _____ .

Applicant has THREE MONTHS FROM THE "MAILING DATE" of this communication to file a reply complying with the requirements noted below. Failure to timely comply will result in ABANDONMENT of this application.
THIS THREE-MONTH PERIOD IS NOT EXTENDABLE.

5. ☐ CORRECTED DRAWINGS (as "replacement sheets") must be submitted.
   ☐ including changes required by the attached Examiner's Amendment / Comment or in the Office action of Paper No./Mail Date _____ .

   Identifying indicia such as the application number (see 37 CFR 1.84(c)) should be written on the drawings in the front (not the back) of each sheet. Replacement sheet(s) should be labeled as such in the header according to 37 CFR 1.121(d).

6. ☐ DEPOSIT OF and/or INFORMATION about the deposit of BIOLOGICAL MATERIAL must be submitted. Note the attached Examiner's comment regarding REQUIREMENT FOR THE DEPOSIT OF BIOLOGICAL MATERIAL.

Attachment(s)

1. ☐ Notice of References Cited (PTO-892)
2. ☐ Information Disclosure Statements (PTO/SB/08), Paper No./Mail Date _____.
3. ☐ Examiner's Comment Regarding Requirement for Deposit of Biological Material _____.
4. ☐ Interview Summary (PTO-413), Paper No./Mail Date. _____.
5. ☐ Examiner's Amendment/Comment
6. ☑ Examiner's Statement of Reasons for Allowance
7. ☐ Other _____.

/HUNG D NGUYEN/
Primary Examiner, Art Unit 3761

Notice of Pre-AIA or AIA Status

1. The present application, filed on or after March 16, 2013, is being examined under the first inventor to file provisions of the AIA.

Reason for Allowance

2. The following is an examiner's statement of reasons for allowance: allowance of claims 1-24 is indicated because the prior art of record does not show or fairly suggest "wherein responsive at least in part to a level of smoke sensed by the smoke sensor, the at least one power control circuit is operative to cause cooking power to the magnetron to be withdrawn to end a current cooking session prior to a set end time of the current cooking session, wherein after the current cooking session has been caused to end prior to the set end time based on the sensed level of smoke, the at least one power control circuit is operative thereafter to enable the magnetron to receive cooking power in a next subsequent cooking session" incorporated with all other limitations as claimed in claim 1; "wherein responsive at least in part to a level of smoke sensed by the at least one smoke sensor during a cooking session, the at least one power control circuit is operative to cause power to the magnetron to be withdrawn to end the cooking session prior to a set end time, wherein after the cooking session has been caused the end based on the sensed level of smoke, the at least one power control circuit is operative thereafter to enable the magnetron to receive power to commence a next subsequent cooking session" incorporated with all other limitations as claimed in claim 14; and "wherein the at least one power control circuit is operative to cause responsive at least in part to a level of smoke sensed by the at least one smoke sensor, cooking power being currently delivered to the magnetron to be withdrawn whereby a current

cooking session is ended prior to a set end time, and after the current cooking session has been caused to end prior to the set end time based on the sensed level of smoke, cooking power to be delivered to the magnetron to commence a next subsequent cooking session" incorporated with all other limitations as claimed in claim 20.

Any comments considered necessary by applicant must be submitted no later than the payment of the issue fee and, to avoid processing delays, should preferably accompany the issue fee. Such submissions should be clearly labeled "Comments on Statement of Reasons for Allowance."

Conclusion

3. Any inquiry concerning this communication or earlier communications from the examiner should be directed to HUNG D NGUYEN whose telephone number is (571)270-7828. The examiner can normally be reached Mon-Fri 9AM - 9PM.

Examiner interviews are available via telephone, in-person, and video conferencing using a USPTO supplied web-based collaboration tool. To schedule an interview, applicant is encouraged to use the USPTO Automated Interview Request (AIR) at http://www.uspto.gov/interviewpractice.

If attempts to reach the examiner by telephone are unsuccessful, the examiner's supervisor, Helena Kosanovic can be reached on (571)272-9059. The fax phone number for the organization where this application or proceeding is assigned is 571-273-8300.

Information regarding the status of published or unpublished applications may be obtained from Patent Center. Unpublished application information in Patent Center is available to registered users. To file and manage patent submissions in Patent Center,

visit: https://patentcenter.uspto.gov. Visit https://www.uspto.gov/patents/apply/patent-center for more information about Patent Center and https://www.uspto.gov/patents/docx for information about filing in DOCX format. For additional questions, contact the Electronic Business Center (EBC) at 866-217-9197 (toll-free). If you would like assistance from a USPTO Customer Service Representative, call 800-786-9199 (IN USA OR CANADA) or 571-272-1000.

/HUNG D NGUYEN/
Primary Examiner, Art Unit 3761
4/12/2023

HUNG D. NGUYEN
Primary Examiner
Art Unit 3761

Issue Classification	Application/Control No.	Applicant(s)/Patent Under Reexamination
	17/691,628	Hall et al.
	Examiner	**Art Unit**
	HUNG D NGUYEN	3761

CPC

Symbol					Type	Version
F25D	/	23	/	12	F	2013-01-01
F25D	/	29	/	005	I	2013-01-01
H05B	/	6	/	666	I	2013-01-01
H05B	/	6	/	68	I	2013-01-01

CPC Combination Sets

Symbol					Type	Set	Ranking	Version
	/		/					

NONE (Assistant Examiner)	(Date)	**Total Claims Allowed:** 24	
/HUNG D NGUYEN/ Primary Examiner, Art Unit 3761 (Primary Examiner)	12 April 2023 (Date)	O.G. Print Claim(s) 1	O.G. Print Figure 24

U.S. Patent and Trademark Office

Part of Paper No.: 20230412

Issue Classification	Application/Control No.	Applicant(s)/Patent Under Reexamination
	17/691,628	Hall et al.
	Examiner	**Art Unit**
	HUNG D NGUYEN	3761

INTERNATIONAL CLASSIFICATION				
CLAIMED				
F25D	/	23	/	12
H05B	/	6	/	66

NON-CLAIMED				
	/		/	

US ORIGINAL CLASSIFICATION	
CLASS	**SUBCLASS**

CROSS REFERENCES(S)						
CLASS	**SUBCLASS (ONE SUBCLASS PER BLOCK)**					

NONE (Assistant Examiner)	(Date)	**Total Claims Allowed:** 24	
/HUNG D NGUYEN/ Primary Examiner, Art Unit 3761 (Primary Examiner)	12 April 2023 (Date)	O.G. Print Claim(s) 1	O.G. Print Figure 24

U.S. Patent and Trademark Office

Part of Paper No.: 20230412

Issue Classification	Application/Control No.	Applicant(s)/Patent Under Reexamination
	17/691,628	Hall et al.
	Examiner	**Art Unit**
	HUNG D NGUYEN	3761

☐ Claims renumbered in the same order as presented by applicant ☐ CPA ☐ T.D. ☐ R.1.47

CLAIMS

Final	Original	Final	Original	Final	Original	Final	Original	Final	Original	Final	Original	Final	Original	Final	Original
1	1	10	10	19	18										
2	2	11	11	20	18										
3	3	12	12	21	23										
4	4	13	13	22	20										
5	5	14	22	23	21										
6	6	15	14	24	24										
7	7	16	15												
8	8	17	16												
9	9	18	17												

NONE (Assistant Examiner)	(Date)	**Total Claims Allowed:** 24	
/HUNG D NGUYEN/ Primary Examiner, Art Unit 3761 (Primary Examiner)	12 April 2023 (Date)	O.G. Print Claim(s) 1	O.G. Print Figure 24

U.S. Patent and Trademark Office

Part of Paper No.: 20230412

Search Notes	Application/Control No.	Applicant(s)/Patent Under Reexamination
	17/691,628	Hall et al.
	Examiner	**Art Unit**
	HUNG D NGUYEN	3761

CPC - Searched*		
Symbol	**Date**	**Examiner**
H05B6/642,6435,645,6458,6461,6482,66,666,68,80,806,808; F25D23/003,12; F25D29/005; F25D31/005	01/12/2023	HN
Updated search	04/12/2023	HN

CPC Combination Sets - Searched*		
Symbol	**Date**	**Examiner**

US Classification - Searched*			
Class	**Subclass**	**Date**	**Examiner**
219	482,483485,488,678,679,695,697,702,715,716,717, 718,719,720,721,722,723,756,757,760,761	01/12/2023	HN
	Updated search	04/12/2023	HN

* See search history printout included with this form or the SEARCH NOTES box below to determine the scope of the search.

Search Notes		
Search Notes	**Date**	**Examiner**
Inventor search	01/12/2023	
Global Dossier search	01/12/2023	HN
PE2E search with text	01/12/2023	HN
Updated search	04/12/2023	HN

/HUNG D NGUYEN/ Primary Examiner, Art Unit 3761	

Search Notes	Application/Control No.	Applicant(s)/Patent Under Reexamination
	17/691,628	Hall et al.
	Examiner	**Art Unit**
	HUNG D NGUYEN	3761

Interference Search			
US Class/CPC Symbol	**US Subclass/CPC Group**	**Date**	**Examiner**
F25D	23/12; 29/005	04/12/2023	HN
H05B	6/666,68	04/12/2023	HN

/HUNG D NGUYEN/ Primary Examiner, Art Unit 3761	

PE2E SEARCH - Search History (Prior Art)

Ref #	Hits	Search Query	DBs	Default Operator	Plurals	British Equivalents	Time Stamp
L42	1963	((("HALL") near3 ("Gregory")) OR (("EMMA") near3 ("Philip")) OR (("ESTILL") near3 ("Jim")) OR (("CUNNINGHAM") near3 ("Bryan")) OR (("O'BRIEN") near3 ("Dennis"))).INV.	(US-PGPUB; USPAT; USOCR; FIT (AU, AP, AT, BE, BG, BR, BY, CA, CH, CN, CS, CU, CZ, DD, DE, DK, EA, EE, EP, ES, FI, FR, GB, HR, HU, ID, IE, IL, IS, IT, JP, KR, LT, LU, LV, MA, OA, RU, SU, WO, MC, MD, MY, NL, NO, NZ, PH, PL, PT, RO, RS, SE, SG, SI, SK, TH, TN, TR, TW, UA, VN); FPRS; EPO; JPO; DERWENT; IBM_TDB)	WITH	ON	ON	2023/04/12 11:08 AM
L43	44	L42 AND (smok$3 (sens$3 OR detect$3))	(US-PGPUB; USPAT; USOCR; FIT (AP, AT, AU, BE, BG, BR, BY, CA, CH, CN, CS, CU, CZ, DD, DE, DK, EA, EE, EP, ES, FI, FR, GB, HR, HU, ID, IE, IL, IS, IT, JP, KR, LT, LU, LV, MA, MC, MD, MY, NL, NO, NZ, OA, PH, PL, PT, RO, RS, RU, SE, SG, SI, SK, SU, TH, TN, TR, TW, UA, VN, WO); FPRS; EPO; JPO; DERWENT; IBM_TDB)	WITH	ON	ON	2023/04/12 11:09 AM
L44	12	L43 AND (microwave NEAR oven)	(US-PGPUB; USPAT; USOCR; FIT (AP, AT, AU, BE, BG, BR, BY, CA, CH, CN, CS, CU, CZ, DD, DE, DK, EA, EE, EP, ES, FI, FR, GB, HR, HU, ID, IE, IL, IS, IT, JP, KR, LT, LU, LV, MA, MC, MD, MY, NL, NO, NZ, OA, PH, PL, PT, RO, RS, RU, SE, SG, SI, SK, SU, TH, TN, TR, TW, UA, VN, WO); FPRS; EPO; JPO; DERWENT; IBM_TDB)	WITH	ON	ON	2023/04/12 11:10 AM
L48	10647	219/482,483,485,488,678,679,695,697,702,715,716,717,718,719,720,721,722,723,756,757,7	(US-PGPUB; USPAT; USOCR; FIT (AP, AT, AU, BE, BG, BR, BY, CA, CH, CN, CS, CU,	WITH	ON	ON	2023/04/12 11:40 AM

		60,761.ccls.	CZ, DD, DE, DK, EA, EE, EP, ES, FI, FR, GB, HR, HU, ID, IE, IL, IS, IT, JP, KR, LT, LU, LV, MA, MC, MD, MY, NL, NO, NZ, OA, PH, PL, PT, RO, RS, RU, SE, SG, SI, SK, SU, TH, TN, TR, TW, UA, VN, WO); FPRS; EPO; JPO; DERWENT; IBM_TDB)				
L49	116	L48 AND (microwave NEAR oven) AND ((smok$3 OR vapor$4) (sens$3 OR detect$3))	(US-PGPUB; USPAT; USOCR; FIT (AP, AT, AU, BE, BG, BR, BY, CA, CH, CN, CS, CU, CZ, DD, DE, DK, EA, EE, EP, ES, FI, FR, GB, HR, HU, ID, IE, IL, IS, IT, JP, KR, LT, LU, LV, MA, MC, MD, MY, NL, NO, NZ, OA, PH, PL, PT, RO, RS, RU, SE, SG, SI, SK, SU, TH, TN, TR, TW, UA, VN, WO); FPRS; EPO; JPO; DERWENT; IBM_TDB)	WITH	ON	ON	2023/04/12 11:41 AM
L50	10	L49 AND (control$4 smok$3 power)	(US-PGPUB; USPAT; USOCR; FIT (AP, AT, AU, BE, BG, BR, BY, CA, CH, CN, CS, CU, CZ, DD, DE, DK, EA, EE, EP, ES, FI, FR, GB, HR, HU, ID, IE, IL, IS, IT, JP, KR, LT, LU, LV, MA, MC, MD, MY, NL, NO, NZ, OA, PH, PL, PT, RO, RS, RU, SE, SG, SI, SK, SU, TH, TN, TR, TW, UA, VN, WO); FPRS; EPO; JPO; DERWENT; IBM_TDB)	WITH	ON	ON	2023/04/12 11:41 AM
L51	88881	(H05B6/642,6435,645,6458,6461,6482,66,666,68,80,806,808 OR F25D23/003,12 OR F25D29/005 OR F25D31/005).cpc.	(US-PGPUB; USPAT; USOCR; FIT (AP, AT, AU, BE, BG, BR, BY, CA, CH, CN, CS, CU, CZ, DD, DE, DK, EA, EE, EP, ES, FI, FR, GB, HR, HU, ID, IE, IL, IS, IT, JP, KR, LT, LU, LV, MA, MC, MD, MY, NL, NO, NZ, OA, PH, PL, PT, RO, RS, RU, SE, SG, SI, SK, SU, TH, TN, TR, TW, UA, VN,	WITH	ON	ON	2023/04/12 11:42 AM

			WO); FPRS; EPO; JPO; DERWENT; IBM_TDB)				
L52	784	L51 AND (microwave NEAR oven) AND ((smok$3 OR vapor$4) (sens$3 OR detect$3))	(US-PGPUB; USPAT; USOCR; FIT (AP, AT, AU, BE, BG, BR, BY, CA, CH, CN, CS, CU, CZ, DD, DE, DK, EA, EE, EP, ES, FI, FR, GB, HR, HU, ID, IE, IL, IS, IT, JP, KR, LT, LU, LV, MA, MC, MD, MY, NL, NO, NZ, OA, PH, PL, PT, RO, RS, RU, SE, SG, SI, SK, SU, TH, TN, TR, TW, UA, VN, WO); FPRS; EPO; JPO; DERWENT; IBM_TDB)	WITH	ON	ON	2023/04/12 11:43 AM
L53	32	L52 AND (control$4 smok$3 power)	(US-PGPUB; USPAT; USOCR; FIT (AP, AT, AU, BE, BG, BR, BY, CA, CH, CN, CS, CU, CZ, DD, DE, DK, EA, EE, EP, ES, FI, FR, GB, HR, HU, ID, IE, IL, IS, IT, JP, KR, LT, LU, LV, MA, MC, MD, MY, NL, NO, NZ, OA, PH, PL, PT, RO, RS, RU, SE, SG, SI, SK, SU, TH, TN, TR, TW, UA, VN, WO); FPRS; EPO; JPO; DERWENT; IBM_TDB)	WITH	ON	ON	2023/04/12 11:43 AM
L54	12	(microwave NEAR oven) AND ((smok$3 OR vapor$4) (sens$3 OR detect$3)) AND (control$4 smok$3 power cook$3 session)	(US-PGPUB; USPAT; USOCR; FIT (AP, AT, AU, BE, BG, BR, BY, CA, CH, CN, CS, CU, CZ, DD, DE, DK, EA, EE, EP, ES, FI, FR, GB, HR, HU, ID, IE, IL, IS, IT, JP, KR, LT, LU, LV, MA, MC, MD, MY, NL, NO, NZ, OA, PH, PL, PT, RO, RS, RU, SE, SG, SI, SK, SU, TH, TN, TR, TW, UA, VN, WO); FPRS; EPO; JPO; DERWENT; IBM_TDB)	WITH	ON	ON	2023/04/12 12:00 PM

PE2E SEARCH - Search History (Interference)

Ref #	Hits	Search Query	DBs	Default Operator	Plurals	British Equivalents	Time Stamp

N1	7	(microwave NEAR oven) AND ((smok$3 OR vapor$4) (sens$3 OR detect$3)) AND (control$4 smok$3 power cook$3 session)	(US-PGPUB; USPAT)	WITH	ON	ON	2023/04/12 12:03 PM
N2	7	((microwave NEAR oven) AND ((smok$3 OR vapor$4) (sens$3 OR detect$3)) AND (control$4 smok$3 power cook$3 session)).clm.	(US-PGPUB; USPAT)	WITH	ON	ON	2023/04/12 12:03 PM

Bibliographic Data

Application No: 17/691,628

Foreign Priority claimed: ○ Yes ◉ No

35 USC 119 (a-d) conditions met: ☐ Yes ☑ No ☐ Met After Allowance

Verified and Acknowledged: /HUNG D NGUYEN/ (Examiner's Signature) | Initials

Title: MULTIPLE LINKED APPLIANCE WITH AUXILIARY OUTLET

FILING or 371(c) DATE	CLASS	GROUP ART UNIT	ATTORNEY DOCKET NO.
03/10/2022	219	3761	INT-1001 CIP 2 C 4
RULE			

APPLICANTS

Intirion Corporation, Walpole, MA, UNITED STATES

INVENTORS

Gregory Allan Thomas Hall, Guelph, CANADA

Philip Emma, Topsfield, MA, UNITED STATES

Jim Estill, Guelph, CANADA

Bryan Stuart Cunningham, Kitchener, CANADA

Dennis O'Brien, Guelph, CANADA

CONTINUING DATA

This application is a CON of 16671383 11/01/2019 PAT 11274876

16671383 is a CIP of 15600118 05/19/2017 PAT 10495374

16671383 is a CIP of 15239378 08/17/2016ABN

15600118 is a CON of 15135883 04/22/2016 PAT 9664436

15239378 has PRO of 62262954 12/04/2015

15239378 has PRO of 62211765 08/29/2015

15135883 is a CIP of 14262290 04/25/2014 PAT 9657974

14262290 is a CIP of 12317632 12/23/2008 PAT 8742304

12317632 has PRO of 61009419 12/28/2007

FOREIGN APPLICATIONS

IF REQUIRED, FOREIGN LICENSE GRANTED**

03/16/2022

**** SMALL ENTITY ****

STATE OR COUNTRY

CANADA

ADDRESS

WALKER & JOCKE
231 SOUTH BROADWAY STREET
MEDINA, OH 44256
UNITED STATES

FILING FEE RECEIVED

$880

PART B - FEE(S) TRANSMITTAL

Complete and send this form, together with applicable fee(s), by mail or fax, or via EFS-Web.

By mail, send to: Mail Stop ISSUE FEE
Commissioner for Patents
P.O. Box 1450
Alexandria, Virginia 22313-1450

By fax, send to: (571)-273-2885

INSTRUCTIONS: This form should be used for transmitting the ISSUE FEE and PUBLICATION FEE (if required). Blocks 1 through 5 should be completed where appropriate. All further correspondence will be mailed to the current correspondence address as indicated unless corrected below or directed otherwise in Block 1, by (a) specifying a new correspondence address; and/or (b) indicating a separate "FEE ADDRESS" for maintenance fee notifications. **Because electronic patent issuance may occur shortly after issue fee payment, any desired continuing application should preferably be filed prior to payment of this issue fee in order not to jeopardize copendency.**

CURRENT CORRESPONDENCE ADDRESS (Note: Use Block 1 for any change of address)

7733 7590 04/14/2023
WALKER & JOCKE
231 SOUTH BROADWAY STREET
MEDINA, OH 44256

Note: A certificate of mailing can only be used for domestic mailings of the Fee(s) Transmittal. This certificate cannot be used for any other accompanying papers. Each additional paper, such as an assignment or formal drawing, must have its own certificate of mailing or transmission.

Certificate of Mailing or Transmission

I hereby certify that this Fee(s) Transmittal is being deposited with the United States Postal Service with sufficient postage for first class mail in an envelope addressed to the Mail Stop ISSUE FEE address above, or being transmitted to the USPTO via EFS-Web or by facsimile to (571) 273-2885, on the date below.

(Typed or printed name)
(Signature)
(Date)

APPLICATION NO.	FILING DATE	FIRST NAMED INVENTOR	ATTORNEY DOCKET NO.	CONFIRMATION NO.
17/691,628	03/10/2022	Gregory Allan Thomas Hall	INT-1001 CIP 2 C 4	4539

TITLE OF INVENTION: MULTIPLE LINKED APPLIANCE WITH AUXILIARY OUTLET

APPLN. TYPE	ENTITY STATUS	ISSUE FEE DUE	PUBLICATION FEE DUE	PREV. PAID ISSUE FEE	TOTAL FEE(S) DUE	DATE DUE
nonprovisional	SMALL	$480	$0.00	$0.00	$480	07/14/2023

EXAMINER	ART UNIT	CLASS-SUBCLASS
NGUYEN, HUNG D	3761	219-720000

1. Change of correspondence address or indication of "Fee Address" (37 CFR 1.363).

☐ Change of correspondence address (or Change of Correspondence Address form PTO/AIA/122 or PTO/SB/122) attached.

☐ "Fee Address" indication (or "Fee Address" Indication form PTO/AIA/47 or PTO/SB/47; Rev 03-02 or more recent) attached. **Use of a Customer Number is required.**

2. For printing on the patent front page, list
(1) The names of up to 3 registered patent attorneys or agents OR, alternatively,
(2) The name of a single firm (having as a member a registered attorney or agent) and the names of up to 2 registered patent attorneys or agents. If no name is listed, no name will be printed.

1 RALPH E. JOCKE
2 WALKER & JOCKE
3

3. ASSIGNEE NAME AND RESIDENCE DATA TO BE PRINTED ON THE PATENT (print or type)

PLEASE NOTE: Unless an assignee is identified below, no assignee data will appear on the patent. If an assignee is identified below, the document must have been previously recorded, or filed for recordation, as set forth in 37 CFR 3.11 and 37 CFR 3.81(a). Completion of this form is NOT a substitute for filing an assignment.

(A) NAME OF ASSIGNEE: INTIRION CORPORATION
(B) RESIDENCE: (CITY and STATE OR COUNTRY): FOXBOROUGH, MA

Please check the appropriate assignee category or categories (will not be printed on the patent) : ☐ Individual ☒ Corporation or other private group entity ☐ Government

4a. Fees submitted: ☒ Issue Fee ☐ Publication Fee (if required)

4b. Method of Payment: *(Please first reapply any previously paid fee shown above)*

☒ Electronic Payment via Patent Center or EFS-Web ☐ Enclosed check ☐ Non-electronic payment by credit card (Attach form PTO-2038)

☐ The Director is hereby authorized to charge the required fee(s), any deficiency, or credit any overpayment to Deposit Account No. _____

5. **Change in Entity Status** (from status indicated above)

☐ Applicant certifying micro entity status. See 37 CFR 1.29

☐ Applicant asserting small entity status. See 37 CFR 1.27

☐ Applicant changing to regular undiscounted fee status.

NOTE: Absent a valid certification of Micro Entity Status (see forms PTO/SB/15A and 15B), issue fee payment in the micro entity amount will not be accepted at the risk of application abandonment.

NOTE: If the application was previously under micro entity status, checking this box will be taken to be a notification of loss of entitlement to micro entity status.

NOTE: Checking this box will be taken to be a notification of loss of entitlement to small or micro entity status, as applicable.

NOTE: This form must be signed in accordance with 37 CFR 1.31 and 1.33. See 37 CFR 1.4 for signature requirements and certifications.

Authorized Signature: [signature] Date: 4/25/2023

Typed or printed name: RALPH E. JOCKE Registration No. 31,024

Electronic Patent Application Fee Transmittal

Application Number:	17691628
Filing Date:	10-Mar-2022
Title of Invention:	MULTIPLE LINKED APPLIANCE WITH AUXILIARY OUTLET
First Named Inventor/Applicant Name:	Gregory Allan Thomas Hall
Filer:	Ralph E. Jocke/Janice Ruf
Attorney Docket Number:	INT-1001 CIP 2 C 4

Filed as Small Entity

Filing Fees for Utility under 35 USC 111(a)

Description	Fee Code	Quantity	Amount	Sub-Total in USD($)
Basic Filing:				
Pages:				
Claims:				
Miscellaneous-Filing:				
Petition:				
Patent-Appeals-and-Interference:				
Post-Allowance-and-Post-Issuance:				
UTILITY APPL ISSUE FEE	2501	1	480	480

Description	Fee Code	Quantity	Amount	Sub-Total in USD($)
Extension-of-Time:				
Miscellaneous:				
			Total in USD ($)	**480**

Electronic Acknowledgement Receipt

EFS ID:	47896194
Application Number:	17691628
International Application Number:	
Confirmation Number:	4539
Title of Invention:	MULTIPLE LINKED APPLIANCE WITH AUXILIARY OUTLET
First Named Inventor/Applicant Name:	Gregory Allan Thomas Hall
Customer Number:	7733
Filer:	Ralph E. Jocke/Janice Ruf
Filer Authorized By:	Ralph E. Jocke
Attorney Docket Number:	INT-1001 CIP 2 C 4
Receipt Date:	25-APR-2023
Filing Date:	10-MAR-2022
Time Stamp:	12:52:31
Application Type:	Utility under 35 USC 111(a)

Payment information:

Submitted with Payment	yes
Payment Type	CARD
Payment was successfully received in RAM	$480
RAM confirmation Number	E20234OC53115171
Deposit Account	100637
Authorized User	Janice Ruf

The Director of the USPTO is hereby authorized to charge indicated fees and credit any overpayment as follows:

37 CFR 1.16 (National application filing, search, and examination fees)

37 CFR 1.17 (Patent application and reexamination processing fees)

37 CFR 1.19 (Document supply fees)

37 CFR 1.21 (Miscellaneous fees and charges)

File Listing:

Document Number	Document Description	File Name	File Size(Bytes)/ Message Digest	Multi Part /.zip	Pages (if appl.)
1	Issue Fee Payment (PTO-85B)	Issue_Fee_Payment.pdf	225861 74ae90851d4f4bfad1eb4b33ae2892fe4e122a6b	no	1
Warnings:					
Information:					
2	Fee Worksheet (SB06)	fee-info.pdf	38414 bdc03291ef566e306613c485c32359979a3875f3	no	2
Warnings:					
Information:					
		Total Files Size (in bytes):	264275		

This Acknowledgement Receipt evidences receipt on the noted date by the USPTO of the indicated documents, characterized by the applicant, and including page counts, where applicable. It serves as evidence of receipt similar to a Post Card, as described in MPEP 503.

New Applications Under 35 U.S.C. 111
If a new application is being filed and the application includes the necessary components for a filing date (see 37 CFR 1.53(b)-(d) and MPEP 506), a Filing Receipt (37 CFR 1.54) will be issued in due course and the date shown on this Acknowledgement Receipt will establish the filing date of the application.
National Stage of an International Application under 35 U.S.C. 371
If a timely submission to enter the national stage of an international application is compliant with the conditions of 35 U.S.C. 371 and other applicable requirements a Form PCT/DO/EO/903 indicating acceptance of the application as a national stage submission under 35 U.S.C. 371 will be issued in addition to the Filing Receipt, in due course.
New International Application Filed with the USPTO as a Receiving Office
If a new international application is being filed and the international application includes the necessary components for an international filing date (see PCT Article 11 and MPEP 1810), a Notification of the International Application Number and of the International Filing Date (Form PCT/RO/105) will be issued in due course, subject to prescriptions concerning national security, and the date shown on this Acknowledgement Receipt will establish the international filing date of the application.

UNITED STATES PATENT AND TRADEMARK OFFICE

UNITED STATES DEPARTMENT OF COMMERCE
United States Patent and Trademark Office
Address: COMMISSIONER FOR PATENTS
P.O. Box 1450
Alexandria, Virginia 22313-1450
www.uspto.gov

APPLICATION NO.	FILING DATE	FIRST NAMED INVENTOR	ATTORNEY DOCKET NO.	CONFIRMATION NO.
17/691,628	03/10/2022	Gregory Allan Thomas Hall	INT-1001 CIP 2 C 4	4539

7733 7590 05/08/2023
WALKER & JOCKE
231 SOUTH BROADWAY STREET
MEDINA, OH 44256

EXAMINER
NGUYEN, HUNG D

ART UNIT	PAPER NUMBER
3761	

MAIL DATE	DELIVERY MODE
05/08/2023	PAPER

Please find below and/or attached an Office communication concerning this application or proceeding.

The time period for reply, if any, is set in the attached communication.

PTOL-90A (Rev. 04/07)

Corrected *Notice of Allowability*	**Application No.** 17/691,628	**Applicant(s)** Hall et al.	
	Examiner HUNG D NGUYEN	**Art Unit** 3761	**AIA (FITF) Status** Yes

-- The MAILING DATE of this communication appears on the cover sheet with the correspondence address--

All claims being allowable, PROSECUTION ON THE MERITS IS (OR REMAINS) CLOSED in this application. If not included herewith (or previously mailed), a Notice of Allowance (PTOL-85) or other appropriate communication will be mailed in due course. **THIS NOTICE OF ALLOWABILITY IS NOT A GRANT OF PATENT RIGHTS.** This application is subject to withdrawal from issue at the initiative of the Office or upon petition by the applicant. See 37 CFR 1.313 and MPEP 1308.

1. ☑ This communication is responsive to 4/24/2023.
   ☐ A declaration(s)/affidavit(s) under **37 CFR 1.130(b)** was/were filed on _____.

2. ☐ An election was made by the applicant in response to a restriction requirement set forth during the interview on _____; the restriction requirement and election have been incorporated into this action.

3. ☑ The allowed claim(s) is/are 1-24 . As a result of the allowed claim(s), you may be eligible to benefit from the **Patent Prosecution Highway** program at a participating intellectual property office for the corresponding application. For more information, please see **http://www.uspto.gov/patents/init_events/pph/index.jsp** or send an inquiry to **PPHfeedback@uspto.gov.**

4. ☐ Acknowledgment is made of a claim for foreign priority under 35 U.S.C. § 119(a)-(d) or (f).

   Certified copies:

   a) ☐ All b) ☐ Some* c) ☐ None of the:

   1. ☐ Certified copies of the priority documents have been received.
   2. ☐ Certified copies of the priority documents have been received in Application No. _____ .
   3. ☐ Copies of the certified copies of the priority documents have been received in this national stage application from the International Bureau (PCT Rule 17.2(a)).

   * Certified copies not received: _____ .

Applicant has THREE MONTHS FROM THE "MAILING DATE" of this communication to file a reply complying with the requirements noted below. Failure to timely comply will result in ABANDONMENT of this application.
THIS THREE-MONTH PERIOD IS NOT EXTENDABLE.

5. ☐ CORRECTED DRAWINGS (as "replacement sheets") must be submitted.
   ☐ including changes required by the attached Examiner's Amendment / Comment or in the Office action of Paper No./Mail Date _____ .

   Identifying indicia such as the application number (see 37 CFR 1.84(c)) should be written on the drawings in the front (not the back) of each sheet. Replacement sheet(s) should be labeled as such in the header according to 37 CFR 1.121(d).

6. ☐ DEPOSIT OF and/or INFORMATION about the deposit of BIOLOGICAL MATERIAL must be submitted. Note the attached Examiner's comment regarding REQUIREMENT FOR THE DEPOSIT OF BIOLOGICAL MATERIAL.

Attachment(s)

1. ☐ Notice of References Cited (PTO-892)
2. ☐ Information Disclosure Statements (PTO/SB/08), Paper No./Mail Date _____.
3. ☐ Examiner's Comment Regarding Requirement for Deposit of Biological Material _____.
4. ☐ Interview Summary (PTO-413), Paper No./Mail Date. _____.
5. ☑ Examiner's Amendment/Comment
6. ☐ Examiner's Statement of Reasons for Allowance
7. ☐ Other _____.

/HUNG D NGUYEN/
Primary Examiner, Art Unit 3761

Notice of Pre-AIA or AIA Status

1. The present application, filed on or after March 16, 2013, is being examined under the first inventor to file provisions of the AIA.

EXAMINER'S AMENDMENT

2. An examiner's amendment to the record appears below. Should the changes and/or additions be unacceptable to applicant, an amendment may be filed as provided by 37 CFR 1.312. To ensure consideration of such an amendment, it MUST be submitted no later than the payment of the issue fee.

The application has been amended as follows:

In claim 23, line 3, after "a refrigerator", delete ".", and insert ","

Conclusion

Any inquiry concerning this communication or earlier communications from the examiner should be directed to HUNG D NGUYEN whose telephone number is (571)270-7828. The examiner can normally be reached Mon-Fri 9AM - 9PM.

Examiner interviews are available via telephone, in-person, and video conferencing using a USPTO supplied web-based collaboration tool. To schedule an interview, applicant is encouraged to use the USPTO Automated Interview Request (AIR) at http://www.uspto.gov/interviewpractice.

If attempts to reach the examiner by telephone are unsuccessful, the examiner's supervisor, Helena Kosanovic can be reached on (571)272-9059. The fax phone

number for the organization where this application or proceeding is assigned is 571-273-8300.

Information regarding the status of published or unpublished applications may be obtained from Patent Center. Unpublished application information in Patent Center is available to registered users. To file and manage patent submissions in Patent Center, visit: https://patentcenter.uspto.gov. Visit https://www.uspto.gov/patents/apply/patent-center for more information about Patent Center and https://www.uspto.gov/patents/docx for information about filing in DOCX format. For additional questions, contact the Electronic Business Center (EBC) at 866-217-9197 (toll-free). If you would like assistance from a USPTO Customer Service Representative, call 800-786-9199 (IN USA OR CANADA) or 571-272-1000.

/HUNG D NGUYEN/
Primary Examiner, Art Unit 3761
5/8/2023

HUNG D. NGUYEN
Primary Examiner
Art Unit 3761

Issue Classification	Application/Control No.	Applicant(s)/Patent Under Reexamination
	17/691,628	Hall et al.
	Examiner	**Art Unit**
	HUNG D NGUYEN	3761

CPC

Symbol					Type	Version
F25D	/	23	/	12	F	2013-01-01
F25D	/	29	/	005	I	2013-01-01
H05B	/	6	/	666	I	2013-01-01
H05B	/	6	/	68	I	2013-01-01

CPC Combination Sets

Symbol					Type	Set	Ranking	Version
	/		/					

NONE (Assistant Examiner)	(Date)	**Total Claims Allowed:** 24	
/HUNG D NGUYEN/ Primary Examiner, Art Unit 3761 (Primary Examiner)	08 May 2023 (Date)	O.G. Print Claim(s) 1	O.G. Print Figure 24

U.S. Patent and Trademark Office

Part of Paper No.: 20230508

Issue Classification	Application/Control No.	Applicant(s)/Patent Under Reexamination
	17/691,628	Hall et al.
	Examiner	**Art Unit**
	HUNG D NGUYEN	3761

INTERNATIONAL CLASSIFICATION				
CLAIMED				
F25D	/	23	/	12
H05B	/	6	/	66

NON-CLAIMED				
	/		/	

US ORIGINAL CLASSIFICATION	
CLASS	**SUBCLASS**

CROSS REFERENCES(S)						
CLASS	**SUBCLASS (ONE SUBCLASS PER BLOCK)**					

NONE (Assistant Examiner) (Date)	**Total Claims Allowed:** 24	
/HUNG D NGUYEN/ Primary Examiner, Art Unit 3761 (Primary Examiner) (Date) 08 May 2023	O.G. Print Claim(s) 1	O.G. Print Figure 24

U.S. Patent and Trademark Office Part of Paper No.: 20230508

Issue Classification	Application/Control No.	Applicant(s)/Patent Under Reexamination
	17/691,628	Hall et al.
	Examiner	**Art Unit**
	HUNG D NGUYEN	3761

☐ Claims renumbered in the same order as presented by applicant ☐ CPA ☐ T.D. ☐ R.1.47

CLAIMS

Final	Original	Final	Original	Final	Original	Final	Original	Final	Original	Final	Original	Final	Original	Final	Original
1	1	10	10	19	18										
2	2	11	11	20	19										
3	3	12	12	21	23										
4	4	13	13	22	20										
5	5	14	22	23	21										
6	6	15	14	24	24										
7	7	16	15												
8	8	17	16												
9	9	18	17												

NONE (Assistant Examiner)	(Date)	**Total Claims Allowed:** 24	
/HUNG D NGUYEN/ Primary Examiner, Art Unit 3761 (Primary Examiner)	08 May 2023 (Date)	O.G. Print Claim(s) 1	O.G. Print Figure 24

U.S. Patent and Trademark Office

Part of Paper No.: 20230508

UNITED STATES PATENT AND TRADEMARK OFFICE

UNITED STATES DEPARTMENT OF COMMERCE
United States Patent and Trademark Office
Address: COMMISSIONER FOR PATENTS
P.O. Box 1450
Alexandria, Virginia 22313-1450
www.uspto.gov

APPLICATION NO.	ISSUE DATE	PATENT NO.	ATTORNEY DOCKET NO.	CONFIRMATION NO.
17/691,628	06/13/2023	11674746	INT-1001 CIP 2 C 4	4539

7733 7590 05/24/2023

WALKER & JOCKE
231 SOUTH BROADWAY STREET
MEDINA, OH 44256

ISSUE NOTIFICATION

The projected patent number and issue date are specified above. The patent will issue electronically. The electronically issued patent is the official patent grant pursuant to 35 U.S.C. § 153. The patent may be accessed on or after the issue date through Patent Center at https://patentcenter.uspto.gov/. The patent will be available in both the public and the private sides of Patent Center. Further assistance in electronically accessing the patent, or about Patent Center, is available by calling the Patent Electronic Business Center at 1-888-217-9197.

The USPTO is implementing electronic patent issuance with a transition period, during which period the USPTO will mail a ceremonial paper copy of the electronic patent grant to the correspondence address of record. Additional copies of the patent (i.e., certified and presentation copies) may be ordered for a fee from the USPTO's Certified Copy Center at https://certifiedcopycenter.uspto.gov/index.html. The Certified Copy Center may be reached at (800)972-6382.

Determination of Patent Term Adjustment under 35 U.S.C. 154 (b)
(application filed on or after May 29, 2000)

The Patent Term Adjustment is 0 day(s). Any patent to issue from the above-identified application will include an indication of the adjustment on the front page.

If a Continued Prosecution Application (CPA) was filed in the above-identified application, the filing date that determines Patent Term Adjustment is the filing date of the most recent CPA.

Applicant will be able to obtain more detailed information by accessing the Patent Application Information Retrieval (PAIR) WEB site (http://pair.uspto.gov).

Any questions regarding the Patent Term Extension or Adjustment determination should be directed to the Office of Patent Legal Administration at (571)-272-7702. Questions relating to issue and publication fee payments should be directed to the Application Assistance Unit (AAU) of the Office of Patents Stakeholder Experience (OPSE), Stakeholder Support Division (SSD) at (571)-272-4200.

INVENTOR(s) (Please see PAIR WEB site http://pair.uspto.gov for additional inventors):

Gregory Allan Thomas Hall, Guelph, CANADA;
Philip Emma, Topsfield, MA;
Jim Estill, Guelph, CANADA;
Bryan Stuart Cunningham, Kitchener, CANADA;
Dennis O'Brien, Guelph, CANADA;

APPLICANT(s) (Please see PAIR WEB site http://pair.uspto.gov for additional applicants):

Intirion Corporation, Walpole, MA;

The United States represents the largest, most dynamic marketplace in the world and is an unparalleled location for business investment, innovation, and commercialization of new technologies. The USA offers tremendous resources and advantages for those who invest and manufacture goods here. Through SelectUSA, our nation works to encourage and facilitate business investment. To learn more about why the USA is the best country in the world to develop technology, manufacture products, and grow your business, visit SelectUSA.gov.

UNITED STATES PATENT AND TRADEMARK OFFICE

UNITED STATES DEPARTMENT OF COMMERCE
United States Patent and Trademark Office
Address: COMMISSIONER FOR PATENTS
P.O. Box 1450
Alexandria, Virginia 22313-1450
www.uspto.gov

APPLICATION NO.	FILING DATE	FIRST NAMED INVENTOR	ATTORNEY DOCKET NO.	CONFIRMATION NO.
17/691,628	03/10/2022	Gregory Allan Thomas Hall	INT-1001 CIP 2 C 4	4539

7733 7590 06/14/2023
WALKER & JOCKE
231 SOUTH BROADWAY STREET
MEDINA, OH 44256

EXAMINER
NGUYEN, HUNG D

ART UNIT	PAPER NUMBER
3761	

MAIL DATE	DELIVERY MODE
06/14/2023	PAPER

Please find below and/or attached an Office communication concerning this application or proceeding.

The time period for reply, if any, is set in the attached communication.

PTOL-90A (Rev. 04/07)

UNITED STATES PATENT AND TRADEMARK OFFICE

UNITED STATES DEPARTMENT OF COMMERCE
United States Patent and Trademark Office
Address : COMMISSIONER FOR PATENTS
P.O. Box 1450
Alexandria, VA 22313-1450
www.uspto.gov

APPLICATION NO.	ISSUE DATE	PATENT NO.
17/691,628	13-JUN-23	11674746

WALKER & JOCKE
231 SOUTH BROADWAY STREET
MEDINA, OH 44256

EGRANT NOTIFICATION

Your electronic patent grant (eGrant) is now available, which can be accessed via Patent Center at https://patentcenter.uspto.gov

The electronic patent grant is the official patent grant under 35 U.S.C. 153. For more information, please visit https://www.uspto.gov/electronicgrants

IN THE UNITED STATES PATENT AND TRADEMARK OFFICE

Patent No.:	**11,674,746**	)	
		)	
Issue Date:	**June 13, 2023**	)	**Art Unit 3761**
		)	
First Named Inventor:		)	
	Gregory Allan Thomas Hall	)	**Primary Examiner**
		)	**Hung D. Nguyen**
		)	
Serial No.:	**17/691,628**	)	
		)	
		)	
Filed:	**March 10, 2022**	)	
		)	
		)	
Conf.	**4539**	)	

Title: Multiple Linked Appliance With Auxiliary Outlet

Commissioner for Patents
P.O. Box 1450
Alexandria, VA 22313-1450

REQUEST FOR CERTIFICATE OF CORRECTION OF PATENT FOR APPLICANT'S MISTAKE (37 CFR §1.323)

Sir:

It is noted that there are errors in the above-referenced patent of a typographical and clerical nature as fully described below. The errors occurred in good faith. Correction thereof does not involve such changes in the patent as would constitute new matter or would require reexamination. A Certificate of Correction is requested.

Further it is noted that there is one printing error in the above-referenced patent that occurred due to an Office mistake. It is requested that the Certificate of Correction also correct that Office printing error.

Description of the Errors

In Column 26, line 2, "in" should be – and--.

In Column 26, line 14, after "one" insert –of--.

In Column 26, line 53, "caused the" should be -- caused to--.

In Column 27, line 10, "socket" should be –outlet--.

In Column 28, line 33, the "$" symbol should not be present.

Certificate Of Correction Form

Being filed herewith is a Certificate Of Correction form PTO/SB/44.

Locations Where Errors Occurred In Application File

The first error referenced above occurred in the Application as originally filed on March 10, 2022, on page 45, claim 12, line 2.

The second error referenced above occurred in the Second Preliminary Amendment filed on September 6, 2022 on page 7, claim 12, line 11.

The third error referenced above occurred in the Application as originally filed on March 10, 2022, on page 47, claim 14, line 17.

The fourth error referenced above occurred in the Application as originally filed on March 10, 2022, on page 48, claim 18, line 6.

The fifth error referenced above is an Office printing error. The claim is shown correctly in the Second Preliminary Amendment filed on September 6, 2022 on page 12, claim 24, line 6.

Authorization To Charge Fees

The fee associated with this Request for a Certificate of Correction ($160 – small entity) is being authorized to be charged to the undersigned's credit card. However if this authorization is not effective to pay the fee, or any other fees are due, authorization is hereby given to charge such fees to Deposit Account 10-0637.

Conclusion

Issuance of a Certificate of Correction is respectfully requested. The undersigned will be happy to discuss any aspect of this request by telephone at the Office's convenience.

Respectfully submitted,

/Ralph E. Jocke/
Ralph E. Jocke, Reg. No. 31,029
Walker & Jocke Co., LPA
231 South Broadway
Medina, OH 44256
(330) 721-0000
Customer No. 07733

PTO/SB/44 (09-07)
Approved for use through 03/31/2023. OMB 0651-0033
U.S. Patent and Trademark Office; U.S. DEPARTMENT OF COMMERCE
Under the Paperwork Reduction Act of 1995, no persons are required to respond to a collection of information unless it displays a valid OMB control number.
(Also Form PTO-1050)

UNITED STATES PATENT AND TRADEMARK OFFICE
CERTIFICATE OF CORRECTION

PATENT NO. : 11,674,746

APPLICATION NO.: 17/691,628

ISSUE DATE : June 13, 2023

INVENTOR(S) : Gregory Allan Thomas Hall, et al.

It is certified that an error appears or errors appear in the above-identified patent and that said Letters Patent is hereby corrected as shown below:

In Column 26, line 2, “in” is changed to --and--.

In Column 26, line 14, --of-- is inserted after “one”.

In Column 26, line 53, “caused the” is changed to --caused to--.

In Column 27, line 10, “socket” is changed to --outlet--.

In Column 28, line 33, “$” is deleted.

MAILING ADDRESS OF SENDER (Please do not use Customer Number below):

Walker & Jocke
231 South Broadway
Medina, Ohio 44256

This collection of information is required by 37 CFR 1.322, 1.323, and 1.324. The information is required to obtain or retain a benefit by the public which is to file (and by the USPTO to process) an application. Confidentiality is governed by 35 U.S.C. 122 and 37 CFR 1.14. This collection is estimated to take 1.0 hour to complete, including gathering, preparing, and submitting the completed application form to the USPTO. Time will vary depending upon the individual case. Any comments on the amount of time you require to complete this form and/or suggestions for reducing this burden, should be sent to the Chief Information Officer, U.S. Patent and Trademark Office, U.S. Department of Commerce, P.O. Box 1450, Alexandria, VA 22313-1450. DO NOT SEND FEES OR COMPLETED FORMS TO THIS ADDRESS. **SEND TO: Attention Certificate of Corrections Branch, Commissioner for Patents, P.O. Box 1450, Alexandria, VA 22313-1450.**

If you need assistance in completing the form, call 1-800-PTO-9199 and select option 2.

Privacy Act Statement

The **Privacy Act of 1974 (P.L. 93-579)** requires that you be given certain information in connection with your submission of the attached form related to a patent application or patent. Accordingly, pursuant to the requirements of the Act, please be advised that: (1) the general authority for the collection of this information is 35 U.S.C. 2(b)(2); (2) furnishing of the information solicited is voluntary; and (3) the principal purpose for which the information is used by the U.S. Patent and Trademark Office is to process and/or examine your submission related to a patent application or patent. If you do not furnish the requested information, the U.S. Patent and Trademark Office may not be able to process and/or examine your submission, which may result in termination of proceedings or abandonment of the application or expiration of the patent.

The information provided by you in this form will be subject to the following routine uses:

1. The information on this form will be treated confidentially to the extent allowed under the Freedom of Information Act (5 U.S.C. 552) and the Privacy Act (5 U.S.C 552a). Records from this system of records may be disclosed to the Department of Justice to determine whether disclosure of these records is required by the Freedom of Information Act.
2. A record from this system of records may be disclosed, as a routine use, in the course of presenting evidence to a court, magistrate, or administrative tribunal, including disclosures to opposing counsel in the course of settlement negotiations.
3. A record in this system of records may be disclosed, as a routine use, to a Member of Congress submitting a request involving an individual, to whom the record pertains, when the individual has requested assistance from the Member with respect to the subject matter of the record.
4. A record in this system of records may be disclosed, as a routine use, to a contractor of the Agency having need for the information in order to perform a contract. Recipients of information shall be required to comply with the requirements of the Privacy Act of 1974, as amended, pursuant to 5 U.S.C. 552a(m).
5. A record related to an International Application filed under the Patent Cooperation Treaty in this system of records may be disclosed, as a routine use, to the International Bureau of the World Intellectual Property Organization, pursuant to the Patent Cooperation Treaty.
6. A record in this system of records may be disclosed, as a routine use, to another federal agency for purposes of National Security review (35 U.S.C. 181) and for review pursuant to the Atomic Energy Act (42 U.S.C. 218(c)).
7. A record from this system of records may be disclosed, as a routine use, to the Administrator, General Services, or his/her designee, during an inspection of records conducted by GSA as part of that agency's responsibility to recommend improvements in records management practices and programs, under authority of 44 U.S.C. 2904 and 2906. Such disclosure shall be made in accordance with the GSA regulations governing inspection of records for this purpose, and any other relevant (*i.e.*, GSA or Commerce) directive. Such disclosure shall not be used to make determinations about individuals.
8. A record from this system of records may be disclosed, as a routine use, to the public after either publication of the application pursuant to 35 U.S.C. 122(b) or issuance of a patent pursuant to 35 U.S.C. 151. Further, a record may be disclosed, subject to the limitations of 37 CFR 1.14, as a routine use, to the public if the record was filed in an application which became abandoned or in which the proceedings were terminated and which application is referenced by either a published application, an application open to public inspection or an issued patent.
9. A record from this system of records may be disclosed, as a routine use, to a Federal, State, or local law enforcement agency, if the USPTO becomes aware of a violation or potential violation of law or regulation.

Electronic Patent Application Fee Transmittal

Application Number:	17691628
Filing Date:	10-Mar-2022
Title of Invention:	MULTIPLE LINKED APPLIANCE WITH AUXILIARY OUTLET
First Named Inventor/Applicant Name:	Gregory Allan Thomas Hall
Filer:	Ralph E. Jocke/Janice Ruf
Attorney Docket Number:	INT-1001 CIP 2 C 4

Filed as Small Entity

Filing Fees for Utility under 35 USC 111(a)

Description	Fee Code	Quantity	Amount	Sub-Total in USD($)
Basic Filing:				
Pages:				
Claims:				
Miscellaneous-Filing:				
Petition:				
Patent-Appeals-and-Interference:				
Post-Allowance-and-Post-Issuance:				
CERTIFICATE OF CORRECTION	2811	1	160	160

Description	Fee Code	Quantity	Amount	Sub-Total in USD($)
Extension-of-Time:				
Miscellaneous:				
			Total in USD ($)	**160**

Electronic Acknowledgement Receipt

EFS ID:	48255307
Application Number:	17691628
International Application Number:	
Confirmation Number:	4539
Title of Invention:	MULTIPLE LINKED APPLIANCE WITH AUXILIARY OUTLET
First Named Inventor/Applicant Name:	Gregory Allan Thomas Hall
Customer Number:	7733
Filer:	Ralph E. Jocke/Janice Ruf
Filer Authorized By:	Ralph E. Jocke
Attorney Docket Number:	INT-1001 CIP 2 C 4
Receipt Date:	07-JUL-2023
Filing Date:	10-MAR-2022
Time Stamp:	16:06:44
Application Type:	Utility under 35 USC 111(a)

Payment information:

Submitted with Payment	yes
Payment Type	CARD
Payment was successfully received in RAM	$160
RAM confirmation Number	E202377G07175312
Deposit Account	100637
Authorized User	Janice Ruf

The Director of the USPTO is hereby authorized to charge indicated fees and credit any overpayment as follows:

37 CFR 1.16 (National application filing, search, and examination fees)

37 CFR 1.17 (Patent application and reexamination processing fees)

37 CFR 1.19 (Document supply fees)

37 CFR 1.21 (Miscellaneous fees and charges)

File Listing:

Document Number	Document Description	File Name	File Size(Bytes)/ Message Digest	Multi Part /.zip	Pages (if appl.)
1	Request for Certificate of Correction	Request_for_Certificate_of_Correction_of_Patent.pdf	24961 8cea25830332924afaa192db318bb019b42d0076	no	3
Warnings:					
Information:					
2	Request for Certificate of Correction	Certificate_of_Correction.pdf	180255 1af5e536551a94d4f9195c726a97b5ceef926a58	no	2
Warnings:					
Information:					
3	Fee Worksheet (SB06)	fee-info.pdf	38242 8b9ddc0b6ec969a9ec466349d18a04b39b1777c2	no	2
Warnings:					
Information:					
			Total Files Size (in bytes):	243458	

This Acknowledgement Receipt evidences receipt on the noted date by the USPTO of the indicated documents, characterized by the applicant, and including page counts, where applicable. It serves as evidence of receipt similar to a Post Card, as described in MPEP 503.

New Applications Under 35 U.S.C. 111
If a new application is being filed and the application includes the necessary components for a filing date (see 37 CFR 1.53(b)-(d) and MPEP 506), a Filing Receipt (37 CFR 1.54) will be issued in due course and the date shown on this Acknowledgement Receipt will establish the filing date of the application.
National Stage of an International Application under 35 U.S.C. 371
If a timely submission to enter the national stage of an international application is compliant with the conditions of 35 U.S.C. 371 and other applicable requirements a Form PCT/DO/EO/903 indicating acceptance of the application as a national stage submission under 35 U.S.C. 371 will be issued in addition to the Filing Receipt, in due course.
New International Application Filed with the USPTO as a Receiving Office
If a new international application is being filed and the international application includes the necessary components for an international filing date (see PCT Article 11 and MPEP 1810), a Notification of the International Application Number and of the International Filing Date (Form PCT/RO/105) will be issued in due course, subject to prescriptions concerning national security, and the date shown on this Acknowledgement Receipt will establish the international filing date of the application.

UNITED STATES PATENT AND TRADEMARK OFFICE

CERTIFICATE OF CORRECTION

PATENT NO. : 11,674,746 B2
APPLICATION NO. : 17/691628
DATED : June 13, 2023
INVENTOR(S) : Gregory Allan Thomas Hall et al.

It is certified that error appears in the above-identified patent and that said Letters Patent is hereby corrected as shown below:

In the Claims

In Column 26, Line 2, “in” is changed to --and--.

In Column 26, Line 14, --of-- is inserted after “one”.

In Column 26, Line 53, “caused the” is changed to --caused to--.

In Column 27, Line 10, “socket” is changed to --outlet--.

In Column 28, Line 33, “$” is deleted.

Signed and Sealed this
First Day of August, 2023

Katherine Kelly Vidal

Katherine Kelly Vidal
Director of the United States Patent and Trademark Office