US008446048B2

(12) **United States Patent**
Butt et al.

(10) **Patent No.: US 8,446,048 B2**
(45) **Date of Patent: May 21, 2013**

(54) **CONTROLLER FOR A SAFETY SHUT-OFF SYSTEM**

(76) Inventors: **Marvin Dean Butt**, Brookside (CA); **Scott Christopher Kelly**, Richmond (CA)

(*) Notice: Subject to any disclaimer, the term of this patent is extended or adjusted under 35 U.S.C. 154(b) by 359 days.

(21) Appl. No.: **12/733,212**

(22) PCT Filed: **Aug. 18, 2008**

(86) PCT No.: **PCT/CA2008/001462**

§ 371 (c)(1),
(2), (4) Date: **Apr. 29, 2010**

(87) PCT Pub. No.: **WO2009/021330**

PCT Pub. Date: **Feb. 19, 2009**

(65) **Prior Publication Data**

US 2010/0238639 A1 Sep. 23, 2010

Related U.S. Application Data

(60) Provisional application No. 60/956,155, filed on Aug. 16, 2007.

(51) **Int. Cl.**

H02B 1/24	(2006.01)
H01H 35/00	(2006.01)
H01H 83/00	(2006.01)

(52) **U.S. Cl.**
USPC **307/116**

(58) **Field of Classification Search**
USPC 307/116, 117; 340/628; 361/807
See application file for complete search history.

(56) **References Cited**

U.S. PATENT DOCUMENTS

4,032,286	A	6/1977	Kobayashi et al.	
4,659,909	A	4/1987	Knutson	
5,289,158	A	2/1994	Neves	
5,734,206	A *	3/1998	Keizer et al.	307/116
6,025,788	A	2/2000	Diduck	
6,046,441	A	4/2000	Daffron	
6,130,412	A	10/2000	Sizemore	
6,380,852	B1 *	4/2002	Hartman et al.	340/521
6,697,617	B2 *	2/2004	Liebenow	455/425

(Continued)

FOREIGN PATENT DOCUMENTS

WO WO03/087640 10/2003

OTHER PUBLICATIONS

International Search Report of the International Searching Authority, mailed Nov. 24, 2008, for corresponding International Application No. PCT/CA2008/001462.

(Continued)

Primary Examiner — Carlos Amaya
(74) *Attorney, Agent, or Firm* — Klarquist Sparkman, LLP

(57) **ABSTRACT**

A controller for a safety shut-off system is taught. The controller is for a system that interrupts a supply of electricity to an electrical appliance upon detecting a trigger. The controller includes a housing having a cover with an electrical socket, which is configured to receive an electrical plug electrically coupled to the appliance. The controller also includes interrupter circuitry contained within the housing, which is electrically coupled to a power supply and to the socket, and which is configured to decouple the power supply from the socket upon receiving a trigger signal. The trigger signal is generated in response to a safety hazard associated with the electrical appliance.

16 Claims, 8 Drawing Sheets

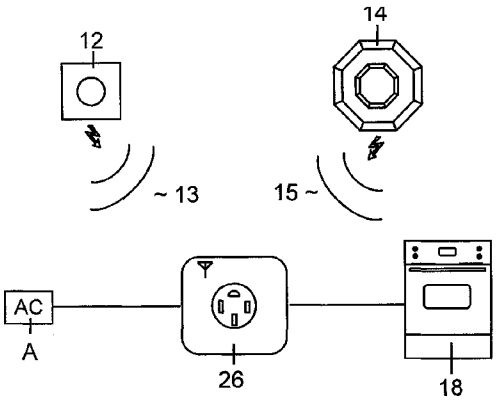

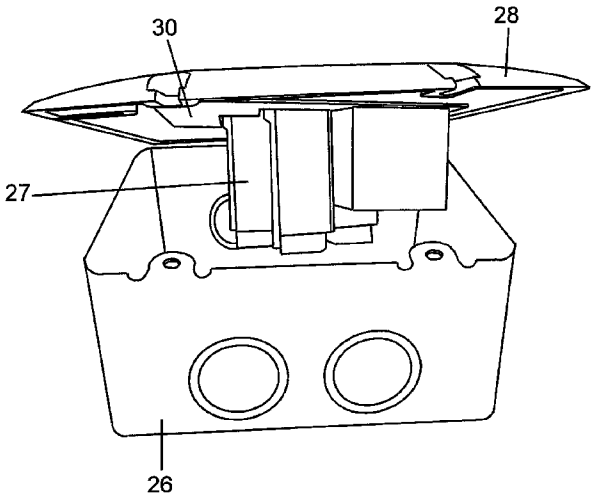

U.S. PATENT DOCUMENTS

6,875,051	B2	4/2005	Pizak
6,974,936	B2	12/2005	Yamauchi et al.
7,009,514	B2	3/2006	Dupeire
7,022,958	B2	4/2006	Yamauchi et al.
2006/0032932	A1	2/2006	Bartlett
2006/0044133	A1	3/2006	Lou
2006/0164253	A1	7/2006	Harvey et al.
2006/0170542	A1	8/2006	Schoor
2006/0232431	A1	10/2006	Shirlee
2007/0155349	A1	7/2007	Nelson et al.

OTHER PUBLICATIONS

Written Opinion of the International Searching Authority, mailed Nov. 24, 2008, for corresponding International Application No. PCT/CA2008/001462.

http://www.firedenyer.co.nz/, Fire Preventors Limited, "The Fire Denyer," published May 1, 2006, 12 pages.

* cited by examiner

Figure 1A

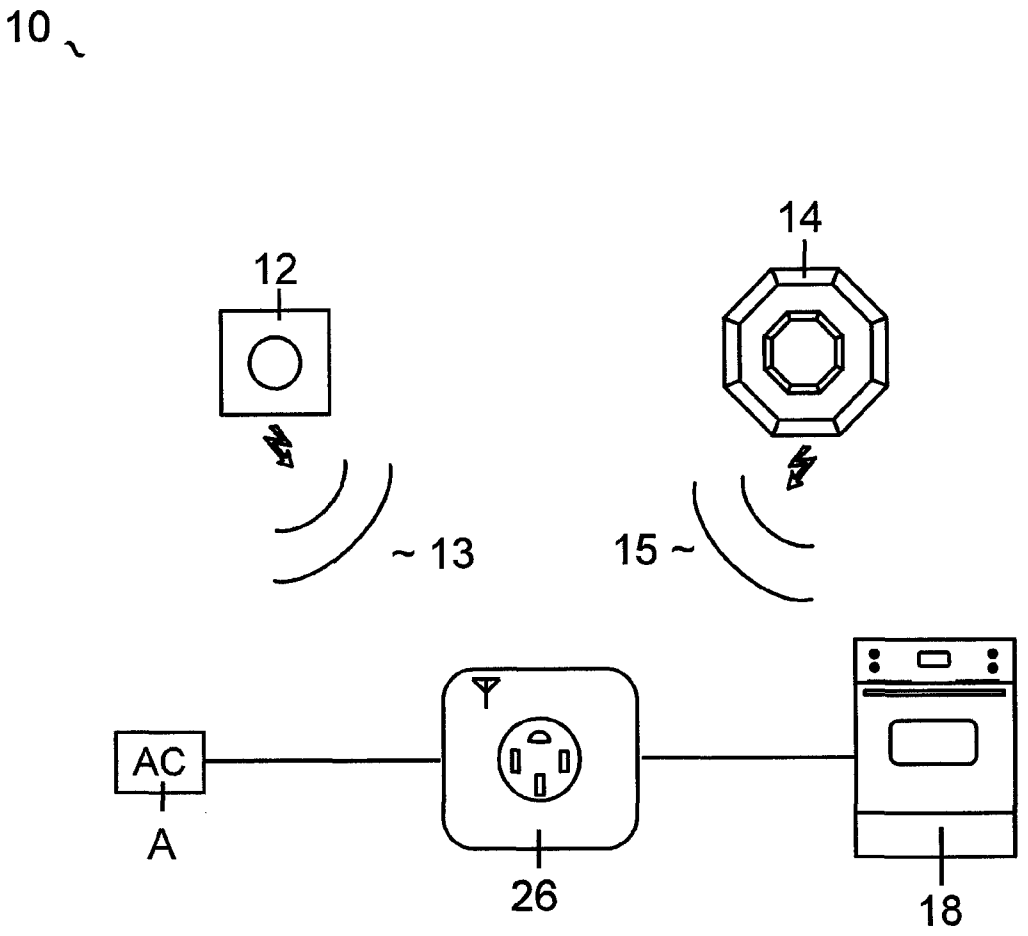

Figure 1B

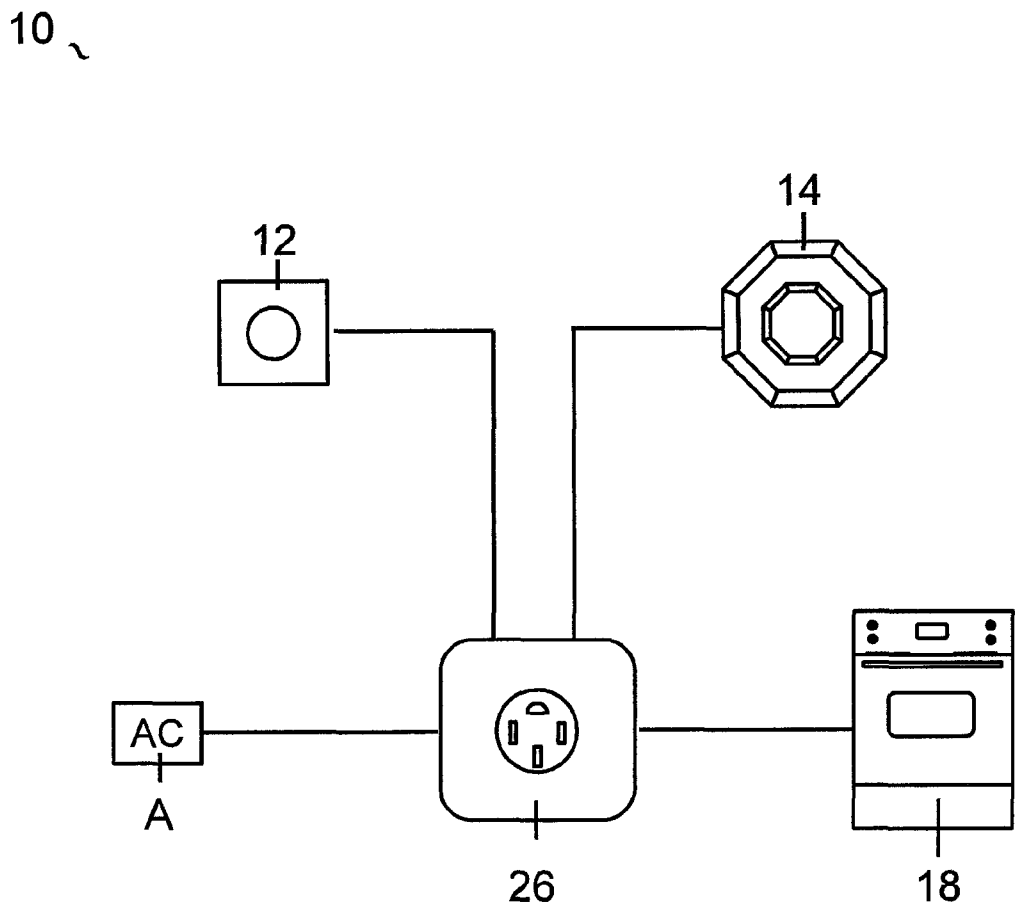

Figure 2

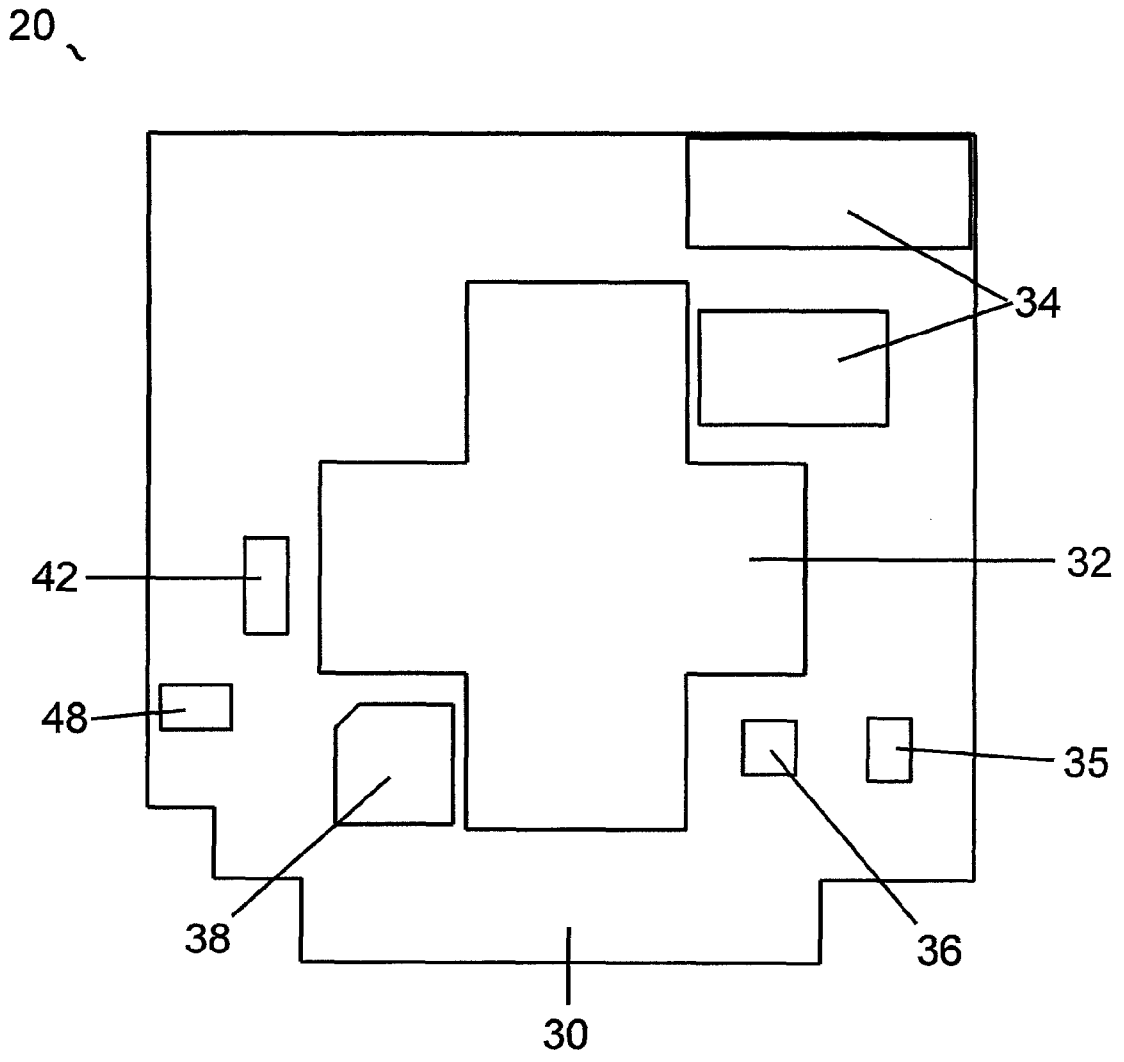

Figure 3

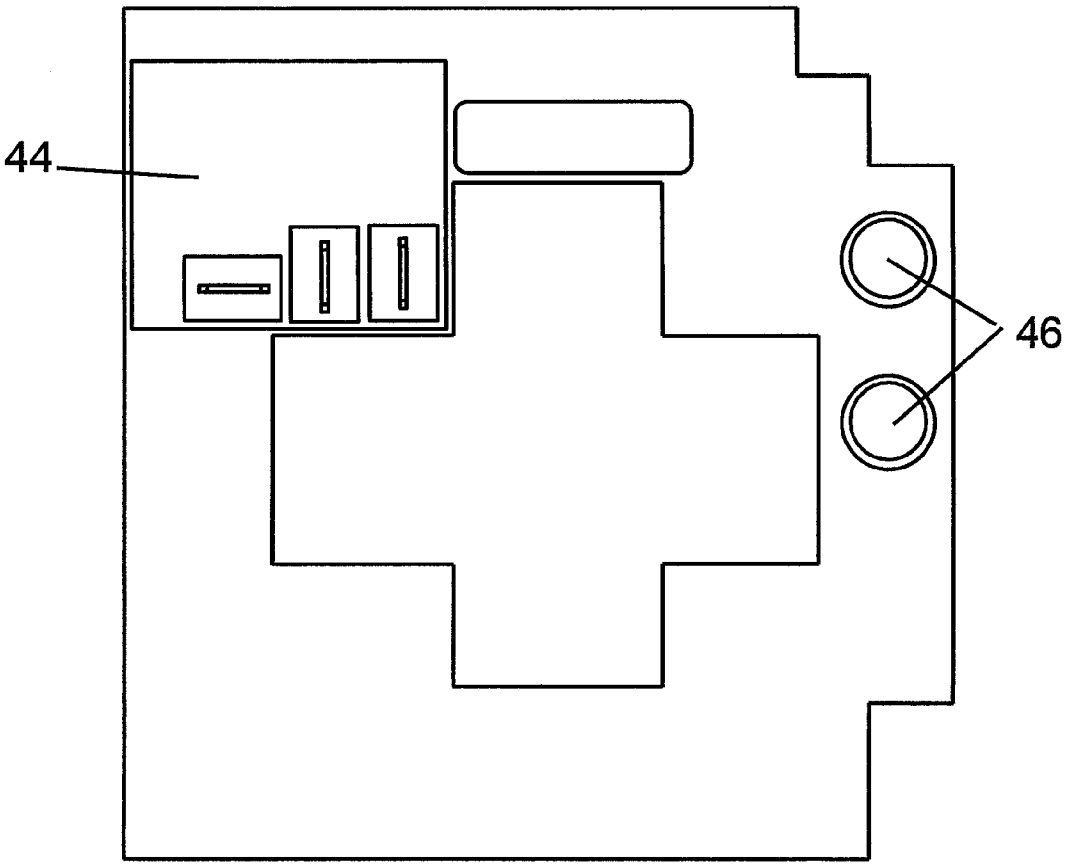

Figure 4

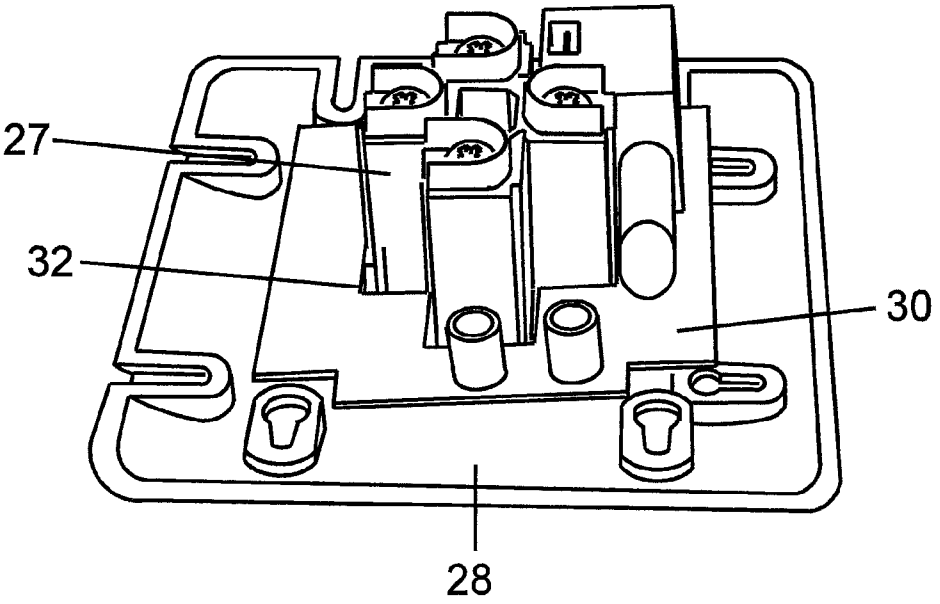

Figure 5

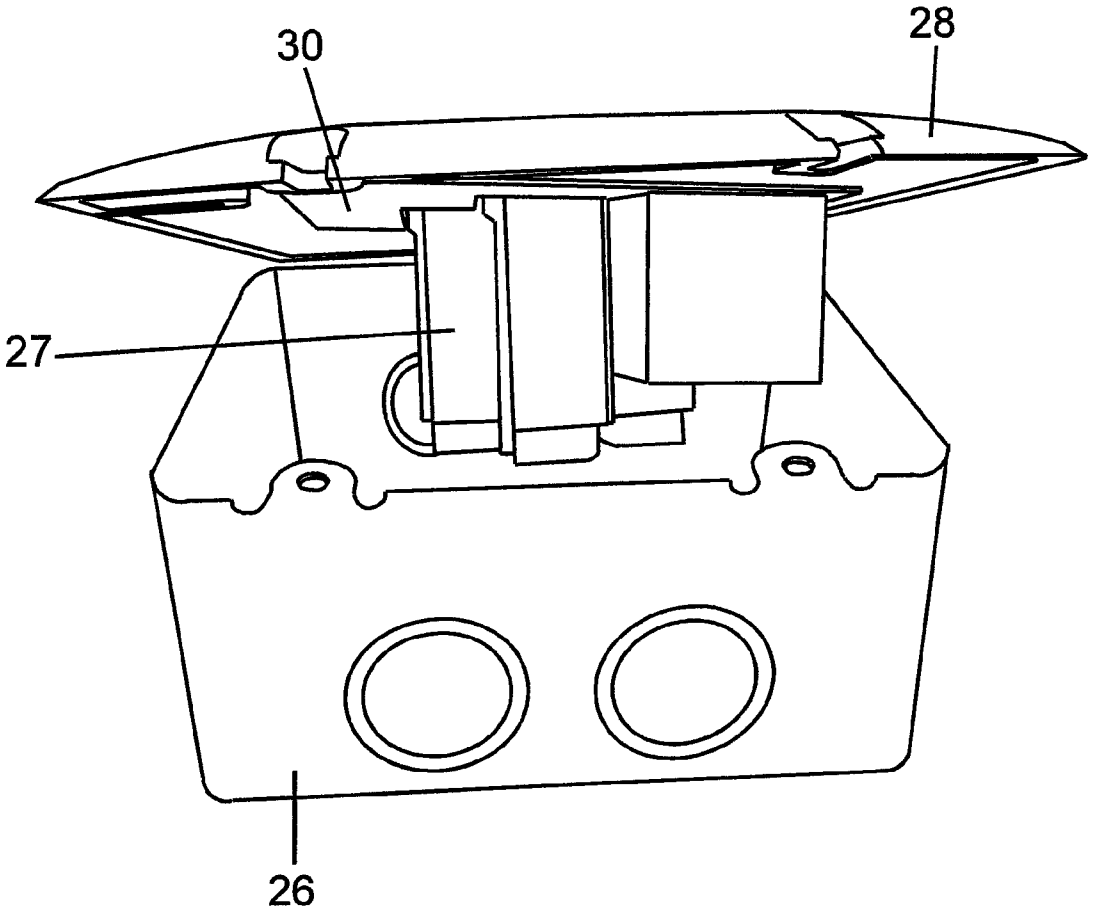

Figure 6

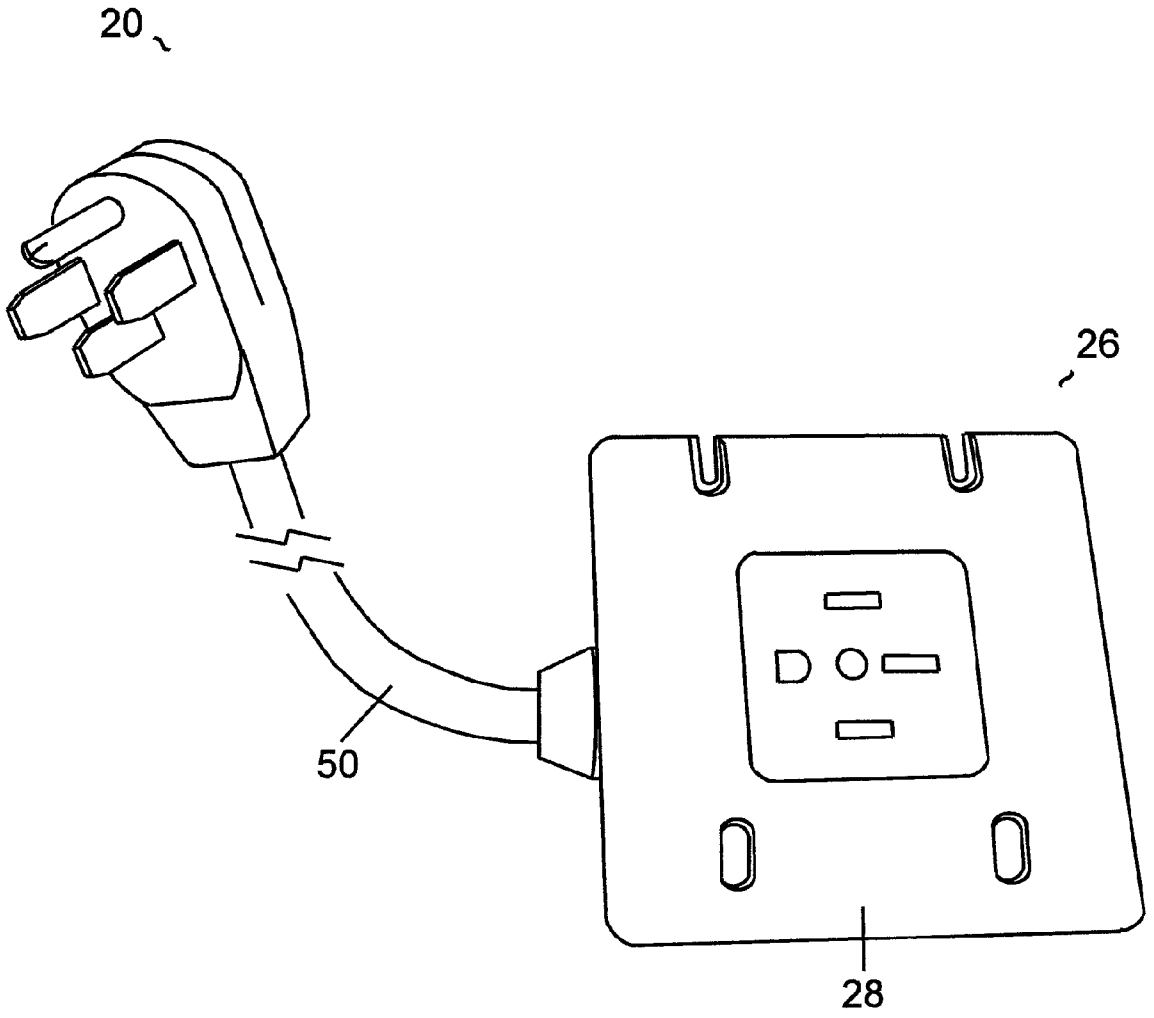

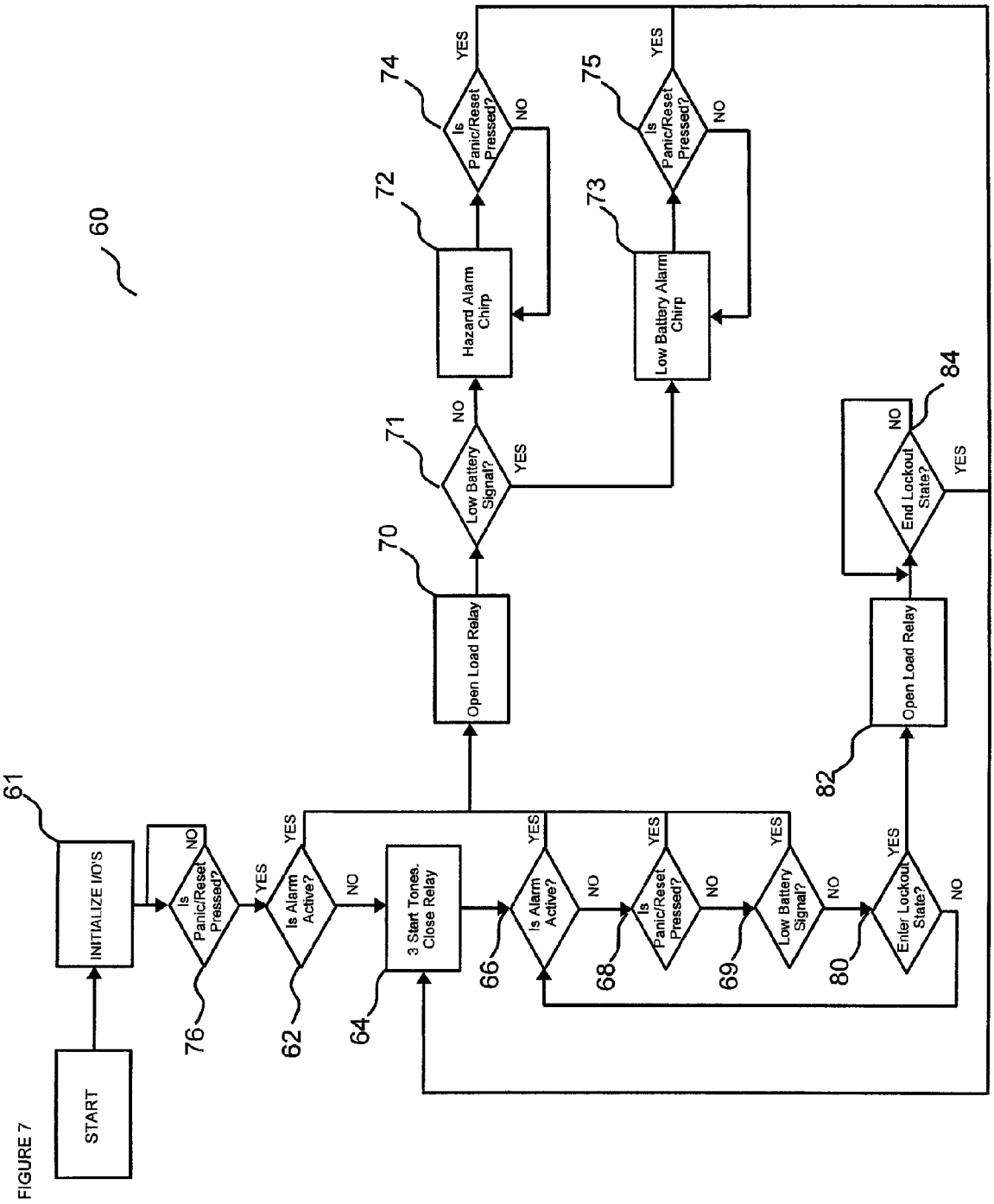
60
START
61
INITIALIZE I/O'S
76
Is Panic/Reset Pressed?
NO
YES
62
Is Alarm Active?
NO
YES
64
3 Start Tones. Close Relay
66
Is Alarm Active?
NO
YES
68
Is Panic/Reset Pressed?
NO
YES
69
Low Battery Signal?
NO
YES
80
Enter Lockout State?
NO
YES
70
Open Load Relay
71
Low Battery Signal?
NO
YES
72
Hazard Alarm Chirp
74
Is Panic/Reset Pressed?
NO
YES
73
Low Battery Alarm Chirp
75
Is Panic/Reset Pressed?
NO
YES
82
Open Load Relay
84
End Lockout State?
NO
YES

FIGURE 7

CONTROLLER FOR A SAFETY SHUT-OFF SYSTEM

CROSS REFERENCE TO RELATED APPLICATIONS

This is the U.S. National Stage of International Application No. PCT/CA2008/001462, filed Aug. 18, 2008, which in turn claims the benefit of U.S. Provisional Application No. 60/956,155, filed Aug. 16, 2007. The provisional application is incorporated herein by reference in its entirety.

FIELD OF THE INVENTION

The present invention relates to a safety shut-off system, and more particularly to a controller for interrupting a supply of electricity to an appliance upon detection of a trigger, such as smoke.

BACKGROUND OF THE INVENTION

Home fires are a serious problem in the United States. The National Fire Protection Association reports that between the years 1999-2002, for example, there were 114,000 reported home fires associated with cooking alone. On average, these fires resulted in 290 deaths and 4,380 injuries annually. Of these fires, approximately two-thirds started with the kitchen range or stove.

Undoubtedly as a result of the severity of the problem of home fires, numerous safety shut-off systems, that attempt to address this problem, have been developed. For example, U.S. Pat. No. 6,130,412 (Sizemore) and U.S. Patent Application 2006/0170542 (Schoor), generally describe systems having a detector for detecting a signal indicative of fire, such as smoke; a switch that connects an appliance, such as an electric range, to an AC power supply; and a controller that opens the switch upon receiving a signal from the detector. These systems also exist in both wired and wireless embodiments. In a wired system the detector is coupled to the controller by a wire; in wireless systems, the coupling between the detector and the controller is usually by means of an RF signal.

Given the need for a solution to the problem of home fires, it is odd that few, if any, of the present systems have been commercially successful. A closer examination of these systems reveals several possible reasons for this. First, the current systems require a level of skill to install that may be beyond the skill level of a typical consumer. Schoor, for example, teaches a system, which, in its wired embodiment, comprises a controller contained within a custom housing that, can optionally be hidden within a wall. A prospective consumer who is interested in a do-it-yourself project may find the prospect of cutting away drywall and having to wire a system too daunting to attempt and consequently avoid purchasing the system. Furthermore, the need for the manufacturer to supply a custom housing for the controller increases manufacturing costs, which costs must be passed on to consumers. The end result is that consumers are presented with a safety shut-off system that is relatively difficult to install, expensive, and possibly do not satisfy building code requirements, all of which are detrimental to success in the marketplace.

Similar problems plague wireless embodiments of safety shut-off systems. Both Schoor and Sizemore, for example, teach wireless safety shut-off systems whose controller is contained within a custom housing interposed between a standard circuit box and the plug of an appliance. As with the wired embodiment discussed above, such a design presents

two problems for consumers: first, the housing for the controller is customized, which translates into increased costs for the consumer; second, the housing for the controller is designed to be positioned flush against the outside of a wall, and consequently protrudes from the wall by the thickness of the housing. This prevents appliances connected to the safety shut-off system from sitting flush against the wall. Consequently, the appliances must sit such that there is a gap between the back of the appliances and the wall. As the floor space associated with this gap is not accessible by the consumer, such a result is not an efficient use of floor space. Such an appliance layout is also not particularly aesthetically pleasing, especially for smaller kitchens.

Consequently, there is a need for a controller for a safety shut-off system that is inexpensive to manufacture, easy to install, and that allows for the efficient and aesthetically pleasing use of floor space.

SUMMARY OF THE INVENTION

According to a first aspect of the invention, there is provided a controller for a system that interrupts a supply of electricity to an electrical appliance upon detecting a trigger. The controller includes a housing having a cover with an electrical socket, the socket configured to receive a first electrical plug electrically coupled to the appliance; and interrupter circuitry contained within the housing, electrically coupled to a power supply and to the socket, configured to decouple the power supply from the socket upon receiving a trigger signal, the trigger signal being generated in response to a safety hazard associated with the electrical appliance. The trigger signal may be, for example, a signal from a hazard detector such as a smoke detector. The interrupter circuitry may include, for example, a microcontroller coupled to a relay driver and a relay.

The controller may further include an electrical cord extending from the housing and a second electrical plug electrically coupled to an end of the electrical cord, the interrupter circuitry electrically coupled to the power supply via the electrical cord and second electrical plug.

The interrupter circuitry may be constructed on a printed circuit board and wherein the printed circuit board is configured to circumscribe a portion of the socket that protrudes into the housing such that the interrupter circuitry can fit within a standard circuit box. The printed circuit board may have an opening through which the portion of the socket that protrudes into the housing extends, and the opening may be cruciform.

The trigger signal may be transmitted from a hazard detector either wirelessly or using a wired connection.

The interrupter circuitry can be further configured to decouple the power supply from the socket upon receiving a panic signal, which can be generated in response to a first user input. The first user input may involve a user pressing a panic button, for example.

The interrupter circuitry can be further configured to reconnect the power supply to the socket upon receiving a reset signal, which can be generated in response to a second user input. The second user input may involve a user pressing a reset button, for example.

The first and second user inputs are generated using a common user input device. The common user input device may be a combined panic/reset button, for example.

The user input device may include wireless transmission circuitry configured to wirelessly transmit the panic and reset signals from the common user input device to the interrupter

circuitry. Wireless transmission circuitry can include, for example, antennas and transmitters.

When signals are transmitted to the controller wirelessly, at least one of the trigger, panic and reset signals may be encoded and, in such cases, the interrupter circuitry may further include decoder circuitry, which is configured to decode the at least one encoded signal such that the interrupter circuitry responds only to the at least one encoded signal, thereby allowing the controller to properly function when exposed to a plurality of wireless signals.

The controller may also include an alarm communicatively coupled to the interrupter circuitry, which is configured to sound an audible signal when the interrupter circuitry decouples the power supply from the socket.

The trigger signal may be transmitted from a hazard detector powered using a hazard detector battery, the hazard detector including battery power detection circuitry configured to detect a level of charge of the hazard detector battery and to transmit a hazard detector low battery signal to the controller when the level of charge of the hazard detector battery decreases below an acceptable threshold. In such cases, the interrupter circuitry can be further configured to receive the hazard detector low battery signal and to decouple the power supply from the socket upon receiving the hazard detector low battery signal.

The interrupter circuitry may be further configured to decouple the power supply from the socket upon receiving a panic signal and to reconnect the power supply to the socket upon receiving a reset signal, the panic and reset signals being generated in response to user inputs from a user input device powered using a user input device battery, the user input device comprising battery power detection circuitry configured to detect a level of charge of the user input device battery and to transmit a user input device low battery signal to the controller when the level of charge of the user input device battery decreases below an acceptable threshold. In such cases, the interrupter circuitry can be further configured to receive the user input device low battery signal and to decouple the power supply from the socket upon receiving the user input device low battery signal.

The controller may also include an alarm communicatively coupled to the interrupter circuitry, the alarm configured to sound an audible signal when the interrupter circuitry receives either of the user input device low battery signal or the hazard detector low battery signal.

When the interrupter circuitry transitions from an unpowered to a powered state, it may be configured to decouple the power supply from the socket until it receives a reset signal, the reset signal being generated in response to a user input, such as pressing a reset button.

The interrupter circuitry may be further configured to decouple the power supply from the socket upon receiving a lockout signal, which can be generated in response to a first user input from a user input device, and to reconnect the power supply to the socket upon receiving restore power signal, which can be generated in response to a second user input from the user input device. The user input device may be a numeric keypad, the lockout signal is generated following entering of a lockout passcode, and the restore power signal is generated following entering of a power restoring passcode.

A detailed description of an exemplary embodiment of the present invention is given in the following. It is to be understood, however, that the invention is not to be construed as limited to this embodiment. The exemplary embodiment set out below is directed to a safety shut-off system used in a kitchen, but the invention may be applied to other applications involving electrical appliances generally.

BRIEF DESCRIPTION OF THE DRAWINGS

In the accompanying drawings, which illustrate an exemplary embodiment of the present invention:

FIGS. **1**A and **1**B are schematic views of wireless and wired embodiments, respectively, of a safety shut-off system utilizing the controller of the present invention.

FIG. **2** is a plan view of one side of a printed circuit board ("PCB"), adapted to fit into a standard circuit box, comprising the controller.

FIG. **3** is a plan view of the second side of the PCB shown in FIG. **2**.

FIG. **4** is a perspective view of the PCB fitted over the interior side of a front plate of the standard circuit box.

FIG. **5** is a perspective view of the PCB and front plate as shown in FIG. **4** positioned such that they are partially contained within the standard circuit box.

FIG. **6** is a perspective view of the circuit box in an embodiment in which it is not designed to be flush mounted within a wall.

FIG. **7** is a flow chart illustrating the functionality of the controller.

DETAILED DESCRIPTION OF AN EXEMPLARY EMBODIMENT

According to one embodiment of the invention and referring to FIG. **1**A, a safety shut-off system **10** whose components are connected wirelessly is shown. In the embodiment of FIG. **1**A, the system **10** comprises a smoke detector **14** and a wireless transmitter housed therein (not shown), a panic/reset button **12** and a wireless transmitter housed therein (not shown), a standard circuit box **26** and a controller **20** housed therein, an AC power source A, and an electric appliance **18**. While in this embodiment the use of a smoke detector is taught, other hazard detectors, such as tremor detectors that detect earthquakes, could also be used. During normal operation, the appliance **18** is plugged into the circuit box **26** and the controller **20** allows electricity to be conducted from AC power supply A to the appliance **18**. The housing of the controller **20** comprises a standard Leviton™ circuit box, or any other suitable and commercially available circuit box, fits within a wall and is flush with the exterior of the wall. Characteristics of a suitable circuit box include that it should satisfy any applicable building regulatory requirements and should have a front cover that is removable and that allows for easy access to the interior of the box. An exemplary circuit box is a Leviton™ 1279-001 receptacle, which measures $4\frac{11}{16}$" long×$4\frac{11}{16}$" wide×$2\frac{1}{8}$" deep. Exemplary wireless smoke detectors **14** include the ADEMCO 5806 detector, the SecureLinc (73942) detector, and the Wisdom 433 Mhz Wireless Smoke Detector.

If the detector **14** detects the presence of smoke, then in the wireless embodiment illustrated in FIG. **1** an RF signal **15** is transmitted and is received by the controller **20**. Upon receiving the signal, the controller interrupts the AC power supply to the appliance **18** and consequently shuts the appliance **18** off. With the appliance **18** shut off, the energy that would otherwise act as an accelerant for the fire is eliminated, and the progress of the fire is slowed. While the fire is not actively extinguished by the safety shut-off system, by slowing the progress of the fire the system helps to minimize fire damage. In the case of a false alarm, or when the danger posed by the fire has passed, a user can press the panic/reset button **12**, which will transmit an RF signal **13** to the controller **20**, and the controller **20** will restore the AC power supply to the appliance **18**.

Alternatively, in the embodiment shown in FIG. **1**B, the controller **20**, detector **14**, and panic/reset button **12** are all wired together. The wiring takes the place of the RF signals **13**, **15** illustrated in FIG. **1**A. The wiring can be performed by the user alone, by a professional in a completed home, or by a professional during the construction of the home.

Referring now to FIGS. **2** and **3**, there are shown plan views of the PCB **30** that comprises the controller **20**. At the centre of the PCB **30** is a cruciform hole **32**, which is constructed so that it fits snugly around the inwardly protruding socket portion of a standard circuit housing **26**. The embodiment of the PCB **30** shown in FIGS. **2** and **3** is for use in a wireless embodiment of the safety shut-off system **10**, and thus comprises the planar antenna and RF receiver combination **34**, which receive the RF signals **13**, **15** sent from the transmitter **16** and the panic/reset button **12**. Following receipt of the signal **13**, **15** by the antenna and receiver **34**, the signal is decoded using an RF decoder **35**. The use of the decoder **35** allows multiple wireless units to operate in proximity to each other, as the signal **15** received from one detector **14** will only interrupt the AC power supply of the particular controller **20** associated with that specific detector **14**. Similarly, the signal **13** received from one panic/reset button **12** will only restore the AC power supply of the particular controller **20** associated with that specific panic/reset button **12**. Thus, two instances of the wireless embodiment of the present invention could be purchased and installed in adjacent apartments without concerns as to interference between the systems. That is, a signal from the detector in one apartment will not trigger an interruption in the AC power supply of the adjacent apartment.

Typical components that can be used to manufacture transmitting circuits include the Linx Technologies™ ANT-418-SP Antenna, TXM-418-LR Transmitter, and LICAL-ENC-MS001 Encoder; typical components that can be used to manufacture receiver circuits include the Linx Technologies™ ANT-418-SP Antenna, RXM-418-LR Receiver, and LICAL-ENC-MS001 Decoder. Other electronic components suitable for manufacturing RF transmitter and receiving circuits could also be used.

Following processing of the signal by the decoder **35**, the signal is transmitted to a microcontroller **36**, which is connected to both a relay driver **42** and a speaker **38**. The microcontroller **36** is programmed with firmware that operates according to the flowchart of FIG. **7**. If, pursuant to the algorithm implemented in the firmware, power to the appliance **18** needs to be interrupted, or if the panic/reset button **12** is pressed indicating an emergency notwithstanding smoke not having been detected by the detector **14**, the microcontroller **36** sends a signal to the relay driver **42**. The relay driver **42** consequently opens a relay **44** and interrupts the AC power supply to the appliance **18**. If, pursuant to the algorithm implemented in the firmware, power should be restored to the appliance **18**, the appropriate signal is sent to relay driver **42**, which consequently closes the relay **44** and restores power. At all times the AC power supply is being interrupted, the microcontroller **36** sends a signal to the speaker **38** to sound an alarm. The alarm generated by the speaker **38** is especially useful when the alarm generated by the detector **14** has been discontinued but power has not as yet been restored by the controller **20** to the appliance **18**. In this case, the alarm alerts the user to the fact that power to the appliance **18** has not yet been restored, and that the panic/reset button **12** needs to be pressed. In the case of a system malfunction in which the relay **44** has been inadvertently opened in the absence of the signal **15** from the detector **14** or the signal **13** from the panic/reset button **12**, then the alarm will alert the user not to the fact that there is a potentially dangerous fire situation, but to the fact that power to the appliance **18** has been erroneously interrupted. All electronic components mounted on the PCB **30** that require DC power are supplied with this power from the power supply of the PCB **30**, comprising capacitors **46** and a bridge rectifier **48**. The bridge rectifier can be, for example, a DF02M or a DB103 integrated circuit.

Referring now to FIGS. **4** and **5**, there is shown the PCB **30** fitted snugly on the interior side of the front plate **28** of the standard circuit housing **26**. FIG. **4** clearly shows the cruciform hole **32** filled with the inwardly extending projections **27** of the front plate **28** that accommodate the prongs of an appliance plug. Clearly, the PCB **30** has to be specially adapted by cutting the cruciform hole **32** such that both the projections **27** and PCB **30** can be housed within the standard circuit housing **26**.

FIG. **6** is an embodiment of the controller **20** that can be connected to the detector **14** and the panic/reset button **12** either wired or wirelessly and that is not designed to be flush mounted on the interior of the wall. In this embodiment, the relay **44** of the controller **20** is coupled to a cord **50**, one end of which is adapted to be inserted into a standard power outlet. Even though the controller **20** is not designed to be flush mounted within a wall, the benefits of the flush mounted embodiment are retained. First, as the standard circuit housing **26** is still used to house the PCB **30**, manufacturing costs remain lower than they would otherwise be if a custom made housing were instead to be used. This cost savings can be transferred to the user. Second, the thickness of the standard circuit housing **26**, as measured from the front plate **28** to the counterpart back face of the housing **26** is low enough such that, generally, the housing **26** can fit inconspicuously either under or to the side of the appliance **18**. Thus, the appliance **18** can still be positioned such that it sits flush against the wall, which both functionally and aesthetically benefits the user.

Finally, referring now to FIG. **7**, a flow chart **60** of the algorithm implemented in the firmware of the microcontroller **36** is displayed. By default, upon starting up, the relay **44** is open and no power is supplied to the appliance **18**. Following initialization (block **61**), the microcontroller **36** can first optionally wait until the panic/reset button **12** is pressed before proceeding to close the relay **44** (block **76**). A benefit of waiting for the user to press the panic/reset button **12** before closing the relay **44** (see block **64**, discussed below) is that if power to the appliance **18** has previously been interrupted as a result of a power failure, the user may have left the appliance "on" forgetting that, when the power failure ends and power is restored some time later, the appliance **18** could be untended and therefore could create a fire hazard. By requiring the user to press the panic/reset button **12** upon the system starting up, power will be restored to the appliance **18** only at the user's explicit request, thereby alleviating the risk of a fire hazard.

Following the user's pressing the panic/reset button **12**, the microcontroller **36** checks to see whether the smoke alarm **14** is active (block **62**). If not, the microcontroller **36** sends a signal to the relay driver **42** to close the relay **44** (block **64**), and enters a loop during which time it simply waits for either the signal **15** indicating that the smoke alarm **14** has detected smoke or the signal **13** indicating that the panic/reset button **12** has been pressed (blocks **66** and **68**). Additionally, one or both of the smoke alarm **14** and the panic/reset button **12** may be powered using batteries. In such cases, if the remaining battery power of the smoke alarm **14** or the panic/reset button **12** becomes dangerously low, a signal (the "low-battery signal") can be transmitted from the smoke alarm **14** or the panic/reset button **12** to the microcontroller **36**, the receipt of which indicates that the system is operating in a "low-battery

state". The microcontroller **36** can be configured to periodically check to see if it has received the low-battery signal (block **69**).

If the alarm **14** is active, the panic/reset button **12** is pressed, the microcontroller **36** has received the low-battery signal, or if signals **13**, **15** are detected immediately following initialization, then a signal is sent to open the relay **44** (block **70**) to interrupt the AC power supply to the appliance **18**. If the relay **44** is open for a reason other than having received the low-battery signal (determined at block **71**), then the microcontroller **36** sounds a "hazard alarm" that indicates to the user that power has been interrupted because of a potentially dangerous condition (e.g.: the presence of smoke or because someone has pressed the panic/reset button **12**) (block **72**). The relay **44** remains open until the panic/reset button **12** is pressed (block **74**), following which the microcontroller **36** closes the relay **44** and again enters the loop during which it waits for the smoke detector **14** to detect smoke, for the panic/reset button **12** to be pressed, for the low-battery signal, or for the system to enter a lockout state, as described below (blocks **66**, **68**, **69** and **80**). If the relay **44** is open because the system is operating in the low-battery state (determined at block **71**), then the microcontroller **36** sounds a "low battery alarm" (block **73**) that audibly informs the user that the microcontroller **36** has interrupted the power supply because the system is operating in the low-battery state as opposed to because a hazard has been detected. Following replacement of the necessary batteries, the user can press the panic/reset button **12** (block **75**) to reset the system. In addition to automatically interrupting the supply of electricity to the appliance **18** if smoke is detected, this functionality allows the user to manually interrupt the supply for any reason whatsoever, including those unrelated to a kitchen fire (e.g. an earthquake). According to an alternative embodiment (not illustrated), the microcontroller **36** may be configured to continue to supply electricity to the appliance **18** upon detection of the low-battery state, and may only sound the low battery alarm when in such a state as opposed to also interrupting power to the appliance **18**. Such a configuration may be more convenient to users who could prefer to replace batteries at a later time and who do not want to deprived of use of their appliance **18** in the meantime.

According to another embodiment of the invention and referring specifically to blocks **80**, **82** and **84** of FIG. **7**, in addition to the smoke alarm **14**, the panic/reset button **12**, and the controller **20**, the safety shut-off system may further include a numeric keypad (not shown) that can allow the user to enter a user-selected passcode (the "lockout passcode") that can interrupt power to the appliance **18** until another passcode (the "power restoring passcode") is entered. The lockout passcode and the power restoring passcode can be the same. Entering the lockout passcode results in the safety shut-off system entering a "lockout state"; entering the power restoring passcode ends the lockout state. At block **80** in FIG. **7**, the microcontroller **36** checks to see if it has received a signal from the numeric keypad indicating that the system is in the lockout state. If so, then the microcontroller **36** sends a signal to open the relay **44** (block **82**) and waits for the user to enter the power restoring passcode, thereby signaling the end of the lockout state (block **84**). When the lockout state is over, the relay **44** is closed and power is restored to the appliance **18** (block **64**). The user may want to interrupt power to the appliance **18** even when no hazard condition is present as a preventative measure. For example, the user may be leaving young children alone with the appliance **18** for some time, in which case interrupting power to the appliance **18** using the lockout passcode can eliminate the possibility that the children will play with the appliance **18** and create a fire hazard. Exemplary keypads that can be used to implement this embodiment include the Chamberlain Clicker Keypad #KLIK2U, the Genie GWKP-BL Wireless Keypad, and the Moore-O-Matic Garage Door Opener MegaCode Wireless Keypad MDTK.

Benefits of the aforedescribed embodiments arise from the fact that a standard circuit box, such as those manufactured by the Leviton family of companies, can be used for both wireless and wired embodiments of the invention. This results in lower manufacturing costs, as the same housing can be used for both wireless and wired embodiments of the controller and the housing is inexpensively available commercially as an off-the-shelf component, thus lowering its price. Additionally, when installing the controller, a consumer does not need to cut a hole in dry wall, but instead can simply swap an existing standard circuit housing for the same type of housing containing the controller. Both benefits reduce the time, effort, and money that need be expended by consumers, and consequently increase the likelihood that consumers will adopt the invention.

While a particular embodiment of the present invention has been described in the foregoing, it is to be understood that other embodiments are possible within the scope of the invention and are intended to be included herein. It will be clear to any person skilled in the art that modifications of and adjustments to this invention, not shown, are possible without departing from the spirit of the invention as demonstrated through the exemplary embodiment. The invention is therefore to be considered limited solely by the scope of the appended claims.

The invention claimed is:

1. A controller interrupting a supply of electricity to an electrical appliance, comprising:

(a) a housing having a cover carrying an electrical socket, the socket configured to receive a first electrical plug electrically coupled to the appliance; and

(b) interrupter circuitry enclosed within the housing, the interrupter circuitry electrically coupled between a power supply and the socket, for decoupling the power supply from the socket upon receiving a trigger signal, the trigger signal being generated in response to a safety hazard associated with the electrical appliance,

wherein the interrupter circuitry is constructed on a printed circuit board and wherein the printed circuit board is configured to circumscribe a portion of the socket that protrudes into the housing such that the interrupter circuitry can be enclosed within a standard circuit box, and

wherein the printed circuit board comprises an aperture through which the portion of the socket that protrudes into the housing extends.

2. A controller as claimed in claim **1** further comprising an electrical cord extending from the housing and a second electrical plug electrically coupled to an end of the electrical cord, the interrupter circuitry electrically coupled to the power supply via the electrical cord and second electrical plug.

3. A controller claimed in claim **1** wherein the aperture is cruciform.

4. A controller as claimed in claim **3** further comprising an alarm communicatively coupled to the interrupter circuitry, the alarm configured to sound an audible signal when the interrupter circuitry decouples the power supply from the socket.

5. A controller as claimed in claim **1** wherein the trigger signal is transmitted from a hazard detector, the hazard detec-

tor comprising wireless transmission circuitry configured to wirelessly transmit the trigger signal to the interrupter circuitry.

6. A controller as claimed in claim **5** wherein the interrupter circuitry is further configured to decouple the power supply from the socket upon receiving a panic signal, the panic signal being generated in response to a first user input.

7. A controller as claimed in claim **6** wherein the interrupter circuit is further configured to reconnect the power supply to the socket upon receiving a reset signal, the reset signal being generated in response to a second user input.

8. A controller as claimed in claim **7** wherein the first and second user inputs are generated using a common user input device.

9. A controller as claimed in claim **8** wherein the user input device comprises wireless transmission circuitry configured to wirelessly transmit the panic and reset signals from the common user input device to the interrupter circuitry.

10. A controller as claimed in claim **9** wherein at least one of the trigger, panic and reset signals are encoded and wherein the interrupter circuitry further comprises decoder circuitry, the decoder circuitry configured to decode the at least one encoded signal such that the interrupter circuitry responds only to the at least one encoded signal, thereby allowing the controller to properly function when exposed to a plurality of wireless signals.

11. A controller as claimed in claim **1** wherein

(a) the trigger signal is transmitted from a hazard detector powered using a hazard detector battery, the hazard detector comprising battery power detection circuitry configured to detect a level of charge of the hazard detector battery and to transmit a hazard detector low battery signal to the controller when the level of charge of the hazard detector battery decreases below an acceptable threshold; and

(b) the interrupter circuitry is further configured to receive the hazard detector low battery signal and to decouple the power supply from the socket upon receiving the hazard detector low battery signal.

12. A controller as claimed in claim **11** wherein the interrupter circuitry is further configured:

(a) to decouple the power supply from the socket upon receiving a manually activated panic signal and to reconnect the power supply to the socket upon receiving a reset signal, the panic and reset signals being generated in response to user inputs from a user input device powered using a user input device battery, the user input device comprising battery power detection circuitry configured to detect a level of charge of the user input device battery and to transmit a user input device low battery signal to the controller when the level of charge of the user input device battery decreases below an acceptable threshold; and

(b) to receive the user input device low battery signal and to decouple the power supply from the socket upon receiving the user input device low battery signal.

13. A controller as claimed in claim **11** further comprising an alarm communicatively coupled to the interrupter circuitry, the alarm configured to sound an audible signal when the interrupter circuitry receives either of the user input device low battery signal or the hazard detector low battery signal.

14. A controller as claimed in claim **1** wherein the interrupter circuitry upon transitioning from an unpowered to a powered state is configured to decouple the power supply from the socket until receiving a reset signal, the reset signal being generated in response to a user input.

15. A controller as claimed in claim **1** wherein the interrupter circuitry is further configured to decouple the power supply from the socket upon receiving a lockout signal, the lockout signal being generated in response to a first user input from a user input device, and to reconnect the power supply to the socket upon receiving restore power signal, the restore power signal being generated in response to a second user input from the user input device.

16. A controller as claimed in claim **15** wherein the user input device is a numeric keypad, the lockout signal is generated following entering of a lockout passcode, and the restore power signal is generated following entering of a power restoring passcode.

* * * * *