US008683085B1

(12) **United States Patent**
Castleberry et al.

(10) **Patent No.: US 8,683,085 B1**
(45) **Date of Patent: Mar. 25, 2014**

(54) **USB INTERFACE CONFIGURABLE FOR HOST OR DEVICE MODE**

(75) Inventors: **Jim Castleberry**, Boise, ID (US); **David Luke**, Boise, ID (US)

(73) Assignee: **Marvell International Ltd.**, Hamilton (BM)

(*) Notice: Subject to any disclaimer, the term of this patent is extended or adjusted under 35 U.S.C. 154(b) by 200 days.

(21) Appl. No.: **12/434,000**

(22) Filed: **May 1, 2009**

Related U.S. Application Data

(60) Provisional application No. 61/050,808, filed on May 6, 2008.

(51) **Int. Cl.**
G06F 3/00 (2006.01)

(52) **U.S. Cl.**
USPC **710/8**; 710/14

(58) **Field of Classification Search**
USPC 710/8, 14
See application file for complete search history.

(56) **References Cited**

U.S. PATENT DOCUMENTS

4,611,299	A	9/1986	Hori et al.
4,823,340	A	4/1989	Grassman et al.
5,260,905	A	11/1993	Mori
5,307,343	A	4/1994	Bostica et al.
5,440,523	A	8/1995	Joffe
5,680,595	A	10/1997	Thomann et al.
5,719,890	A	2/1998	Thomman et al.
5,778,007	A	7/1998	Thomann et al.
5,802,131	A	9/1998	Morzano
5,815,447	A	9/1998	Thomann
5,875,470	A	2/1999	Dreibelbis et al.
5,953,340	A	9/1999	Scott et al.
5,996,051	A	11/1999	Mergard
6,021,086	A	2/2000	Joffe et al.
6,034,957	A	3/2000	Haddock et al.
6,067,301	A	5/2000	Aatresh
6,081,528	A	6/2000	Thomann
6,115,389	A	9/2000	Mahale et al.
6,160,814	A	12/2000	Ren et al.
6,167,491	A	12/2000	McAlpine
6,216,205	B1	4/2001	Chin et al.
6,230,191	B1	5/2001	Walker
6,370,624	B1	4/2002	Ajanovic et al.
6,446,173	B1	9/2002	Pham
6,487,207	B1	11/2002	Thomann
6,535,939	B1	3/2003	Arimilli et al.
6,535,963	B1	3/2003	Rivers

(Continued)

FOREIGN PATENT DOCUMENTS

FR	2779843	12/1999
JP	1162294	6/1989

(Continued)

OTHER PUBLICATIONS

"Final Office Action", U.S. Appl. No. 12/163,801, (Nov. 14, 2011), 12 pages.

(Continued)

Primary Examiner — Zachary K Huson

(57) **ABSTRACT**

Various embodiments provide a USB interface that can operate in either a Host or Device mode using standard Link and/or physical interface circuit (PHY) components which, in at least some embodiments, do not have additional circuitry that is utilized to implement the USB OTG standard.

20 Claims, 6 Drawing Sheets

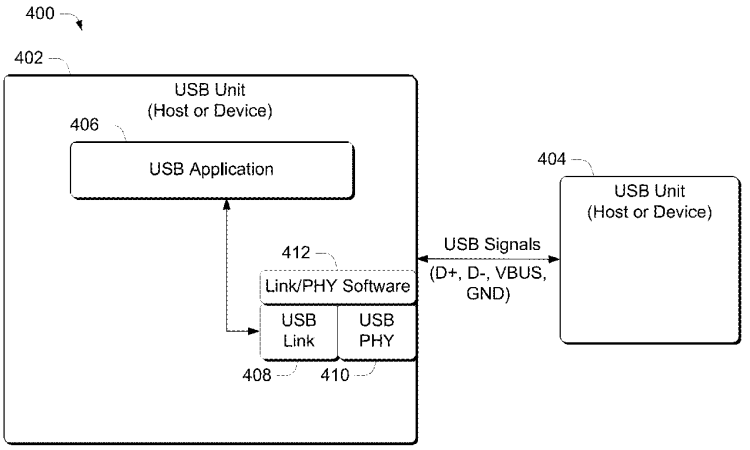

(56) **References Cited**

U.S. PATENT DOCUMENTS

6,539,488	B1	3/2003	Tota et al.	
6,618,390	B1	9/2003	Erimli et al.	
6,712,704	B2	3/2004	Elliott	
6,714,643	B1	3/2004	Gargeya et al.	
6,732,184	B1	5/2004	Merchant et al.	
6,741,589	B1	5/2004	Sang et al.	
6,785,272	B1	8/2004	Sugihara	
7,039,781	B2	5/2006	Iwata et al.	
7,068,651	B2	6/2006	Schmidt et al.	
7,099,325	B1	8/2006	Kaniz et al.	
7,130,308	B2	10/2006	Haddock et al.	
7,136,953	B1	11/2006	Bisson et al.	
7,149,834	B2	12/2006	Peters et al.	
7,185,132	B2 *	2/2007	Tang	710/305
7,197,591	B2	3/2007	Kwa et al.	
7,249,270	B2	7/2007	Mansell et al.	
7,329,136	B2 *	2/2008	Su et al.	439/172
7,334,072	B1	2/2008	Wright	
7,447,824	B2	11/2008	Jabori et al.	
7,451,280	B2	11/2008	Furtek et al.	
7,469,311	B1	12/2008	Tsu et al.	
7,478,188	B2	1/2009	Patton	
7,480,757	B2	1/2009	Atherton et al.	
7,480,808	B2	1/2009	Caruk et al.	
7,496,707	B2	2/2009	Freking et al.	
7,536,490	B2	5/2009	Mao	
7,539,809	B2	5/2009	Juenger	
7,571,287	B2	8/2009	Lee et al.	
7,583,600	B1	9/2009	Schanke et al.	
7,606,960	B2	10/2009	Munguia	
7,624,221	B1	11/2009	Case	
7,660,925	B2	2/2010	Larson et al.	
7,685,322	B2	3/2010	Bhesania et al.	
7,689,753	B2	3/2010	Kwak et al.	
7,752,342	B2 *	7/2010	Tee et al.	710/8
7,949,817	B1	5/2011	Sakarda	
8,205,028	B1	6/2012	Sakarda	
8,234,425	B1	7/2012	Milner	
8,335,878	B2	12/2012	Lee	
2001/0036116	A1	11/2001	Kubo et al.	
2003/0154314	A1	8/2003	Mason, Jr. et al.	
2004/0093389	A1	5/2004	Mohamed et al.	
2004/0193774	A1	9/2004	Iwata et al.	
2004/0202192	A9	10/2004	Galbi et al.	
2005/0008011	A1	1/2005	Georgiou et al.	
2005/0268001	A1	12/2005	Kimelman et al.	
2006/0031628	A1	2/2006	Sharma	
2006/0075144	A1	4/2006	Challener et al.	
2006/0106962	A1 *	5/2006	Woodbridge et al.	710/106
2007/0002880	A1	1/2007	Chien et al.	
2008/0148083	A1	6/2008	Pesavento et al.	
2008/0215773	A1	9/2008	Christison et al.	
2008/0215774	A1	9/2008	Kim et al.	
2008/0265838	A1 *	10/2008	Garg et al.	320/115
2008/0320189	A1 *	12/2008	Arssov	710/105
2009/0200982	A1 *	8/2009	Hurtz	320/103

FOREIGN PATENT DOCUMENTS

JP	4061094	2/1992
JP	5047174	2/1993
JP	10506776	6/1998
JP	2004288355	10/2004
JP	5107204	10/2012

OTHER PUBLICATIONS

"Final Office Action", U.S. Appl. No. 12/494,076, (Oct. 3, 2011), 13 pages.
"Non-Final Office Action", U.S. Appl. No. 13/092,734, (Aug. 24, 2011), 15 pages.
"Foreign Office Action", Japanese Application No. 2008-270813, (Apr. 3, 2012), 6 pages.
"Notice of Allowance", U.S. Appl. No. 12/494,076, (Aug. 2, 2012), 8 pages.
"Final Office Action", U.S. Appl. No. 13/092,734, (Dec. 29, 2011), 6 pages.
"Notice of Allowance", U.S. Appl. No. 12/163,801, (Mar. 22, 2012), 6 pages.
"Notice of Allowance", U.S. Appl. No. 13/092,734, (Feb. 23, 2012), 4 pages.
"6-Port Fast Ethernet Switch, 88E6060 (Product Overview)", *Link Street*; www.marvell.com; Marvell Semiconductor, Inc.; Sunnyvale, CA, (2002) ,2 pgs.
"7-Port Fast Ethernet Switch with 802.1 Q, 88E6063 (Product Overview)", www.marvell.com; Marvell Semiconductor, Inc.; Sunnyvale, CA, (2002), 2 pgs.
"Advisory Action", U.S. Appl. No. 10/702,744, (Sep. 11, 2007), 3 pages.
"Advisory Action", U.S. Appl. No. 12/163,801, (Jan. 24, 2011), 2 pages.
"European Communication and Search Report", Application No. EP04006012; European Patent Office; Munich, Germany, (May 30, 2005), 4 pgs.
"European Search Report", Application No. EP04006012; Munich, Germany, (May 30, 2005), 4 pages.
"Final Office Action", U.S. Appl. No. 10/702,744, (Jun. 25, 2007), 13 pages.
"Final Office Action", U.S. Appl. No. 12/163,801, (Oct. 14, 2010), 12 pages.
"Final Office Action", U.S. Appl. No. 12/182,014, (Oct. 29, 2010), 16 pages.
"Final Office Action", U.S. Appl. No. 12/494,076, (Mar. 30, 2011), 13 pages.
"Foreign Office Action", Japanese Application No. 2004-071574, (Feb. 19, 2008), 4 pages.
"Foreign Office Action", Japanese Application No. 2008-270813, (May 26, 2011), 4 pages.
"Information Technology—Telecommunications and Information Exchange Between Systems—Local and Metropolitan Area Networks—Specific Requirements", *IEEE*, Wireless LAN Medium Access Control (MAC) and Physical Layer (PHY) Specifications,(Aug. 20, 1999), 531 pages.
"Link Street 88E6063 7-Port Fast Ethernet Switch wih QoS, 802.1Q VLAN, and Virtual Cable Tester (VCT) Technology", *Marvell: News*; www.marvell.com; Marvell Semiconductor, Inc.; Sunnyvale, CA, (Jul. 14, 2003), 1 page.
"Link Street 88E6181 8-Port Gigabit Ethernet Switch with Four-Level QoS", *Marvell: News*; www.marvell.com; Marvell Semiconductor, Inc.; Sunnyvale, CA, (Jul. 14, 2003), 1 page.
"Link Street, Integrated Gateway Router with Multi-Port QoS Switch 88E6218 (Product Overview)", *Gateway Solutions*; www.marvell.com; Marvell Semiconductor, Inc.; Sunnyvale, CA, (2003), 2 pgs.
"Link Street, Integrated Gateway Router with Multi-Port Switch, 88E6208 (Product Overview)", *Gateway Solutions*; www.marvell.com; Marvell Semiconductor, Inc.; Sunnyvale, CA, (2003), 2 pgs.
"Marvell Link Street Gigabit Ethernet Switches Enable the Rapid Deployment of Gigabit Connectivity for the SOHO Market", *Marvell: Press and Investor News*; Marvell Semiconductor, Inc.; Sunnyvale, CA; http://www.marvell.com/press/pressNewsDisplay.do?releaseID=347, (Apr. 29, 2003), 2 pgs.
"Method and Circuit for Transferring Data with Dynamic Party Generation and Checking Scheme in Multi-port DRAM", esp@cenet; Publication No. JP10506776T (Abstract of Corresponding Document No. US5778007); esp@cenet Database—Worldwide; http://v3.espacenet.com/textdoc?DB=EPODOC&IDX=JP10506776T&F=0, (Jun. 30, 1998), 5 pages.
"Multiport Component Memory Series and Application with a Computer", Automated Translation; Europaisches Patentamt, European Patent Office, Office European Des Brevets; Description of FR2779843; World Lingo Language Translation Services;.www.worldlingo.com, (Nov. 19, 20007), 15 pgs.
"Non-Final Office Action", U.S. Appl. No. 12/182,014, (Jun. 1, 2010), 13 pages.
"Non-Final Office Action", U.S. Appl. No. 10/702,744, (Feb. 19, 2009), 5 pages.
"Non-Final Office Action", U.S. Appl. No. 10/702,744, (Dec. 27, 2006), 10 pages.

(56) **References Cited**

OTHER PUBLICATIONS

"Non-Final Office Action", U.S. Appl. No. 12/163,801, (Apr. 22, 2010), 10 pages.
"Non-Final Office Action", U.S. Appl. No. 12/163,801, (Jul. 20, 2011), 11 pages.
"Non-Final Office Action", U.S. Appl. No. 12/436,577, (Sep. 29, 2010), 6 pages.
"Non-Final Office Action", U.S. Appl. No. 12/494,076, (Dec. 22, 2010), 12 pages.
"Notice of Allowance", U.S. Appl. No. 10/702,744, (Mar. 27, 2009), 7 pages.
"Notice of Allowance", U.S. Appl. No. 12/182,014, (Jan. 20, 2011), 6 pages.
"Notice of Allowance", U.S. Appl. No. 12/436,577, (Apr. 14, 2011), 4 pages.
"Partial European Search Report", Application No. EP04006012; European Patent Office, Munich, Germany, (Mar. 14, 2005), 2 pgs.
"Restriction Requirement", U.S. Appl. No. 10/702,744, (Jun. 30, 2006), 5 pages.
Litaize, Daniel et al., "Serial Multi Port Memory Component Comprising RAM Memory Bank Assemblies for Use in Computer", Abstract of FR2779843; Publication No. FR2779843; esp@cenet database;.http://v3.espace.com/textdoc?DB=EPODOC&IDX=FR2779843&F=0, (Dec. 12, 1999), 1 page.
Mori, Toshiki "Multiport Memory", English Abstract of Japanese Patent Publication No. JP5047174; esp@cenet database—Worldwide, (Feb. 26, 1993), 1 page.kp5rjaq
Pallampati, Amarnath "iSCSI Performance Over RDMA-Enabled Network", Thesis, Department of Electrical and Computer Engineering, Graduate School of Wichita State University, (Jul. 2006), 58 pages.
Prince, Betty "High Performance Memories, New Architectures DRAMs and SRAMs—Evolution and Function", John Wiley & Sons, Ltd.; West Sussex, England, (1996), pp. 58-61.
"Foreign Notice of Allowance", Japanese Application No. 2008-270813, Aug. 31, 2012, 7 pages.
"Non-Final Office Action", U.S. Appl. No. 13/045,186, Aug. 22, 2013, 12 pages.
"Restriction Requirement", U.S. Appl. No. 13/045,186, Jun. 19, 2013, 5 pages.
"Notice of Allowance", U.S. Appl. No. 13/716,481, Nov. 14, 2013, 13 pages.
"Notice of Allowance", U.S. Appl. No. 13/045,186, Nov. 1, 2013, 9 pages.

* cited by examiner

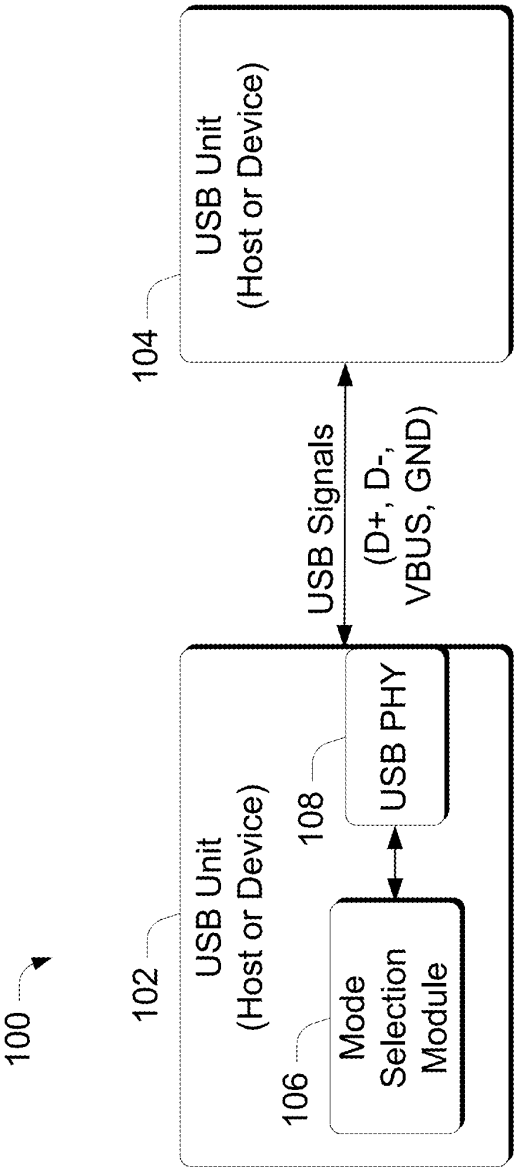
100
102
USB Unit
(Host or Device)
106
Mode
Selection
Module
108
USB PHY
USB Signals
(D+, D-,
VBUS, GND)
104
USB Unit
(Host or Device)

Fig. 1

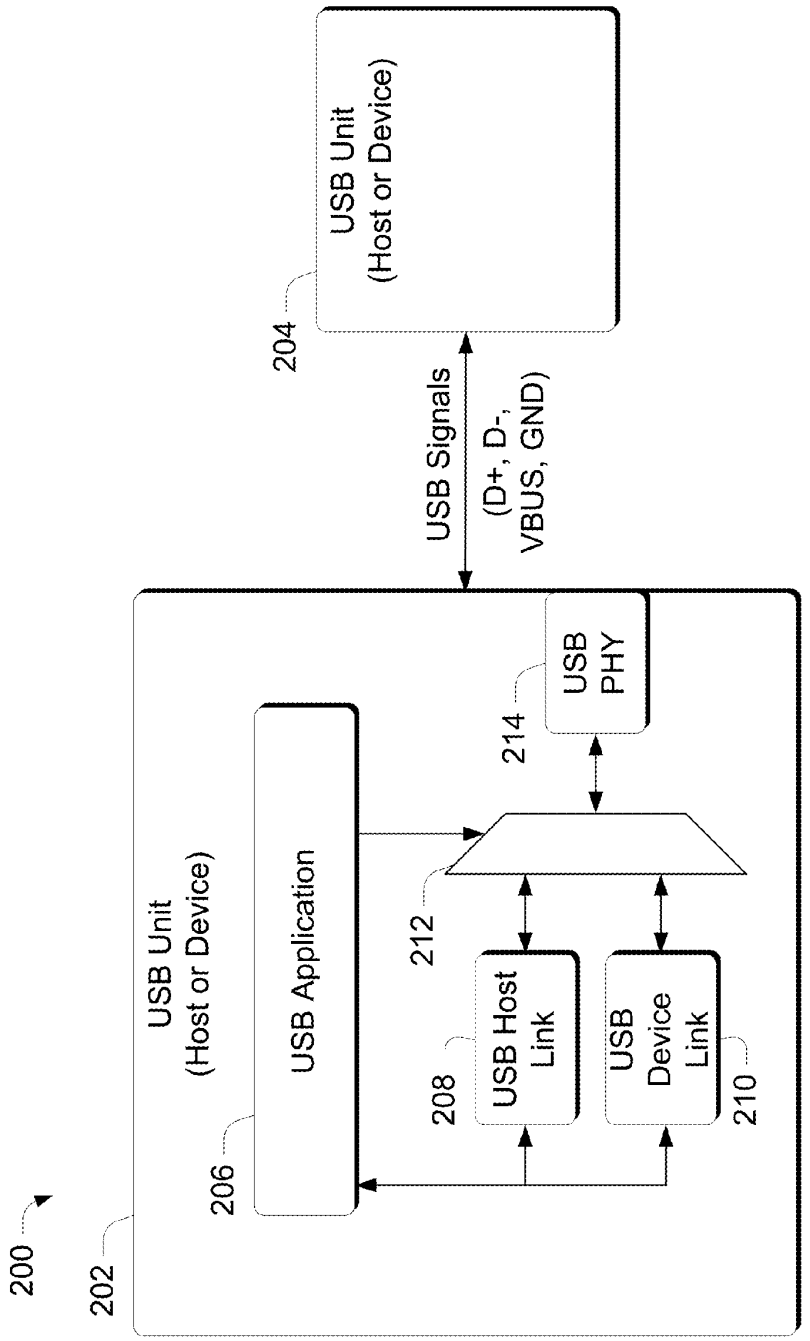
200
202
USB Unit
(Host or Device)
206
USB Application
212
208
USB Host
Link
USB
Device
Link
210
214
USB
PHY
USB Signals
(D+, D-,
VBUS, GND)
204
USB Unit
(Host or Device)

Fig. 2

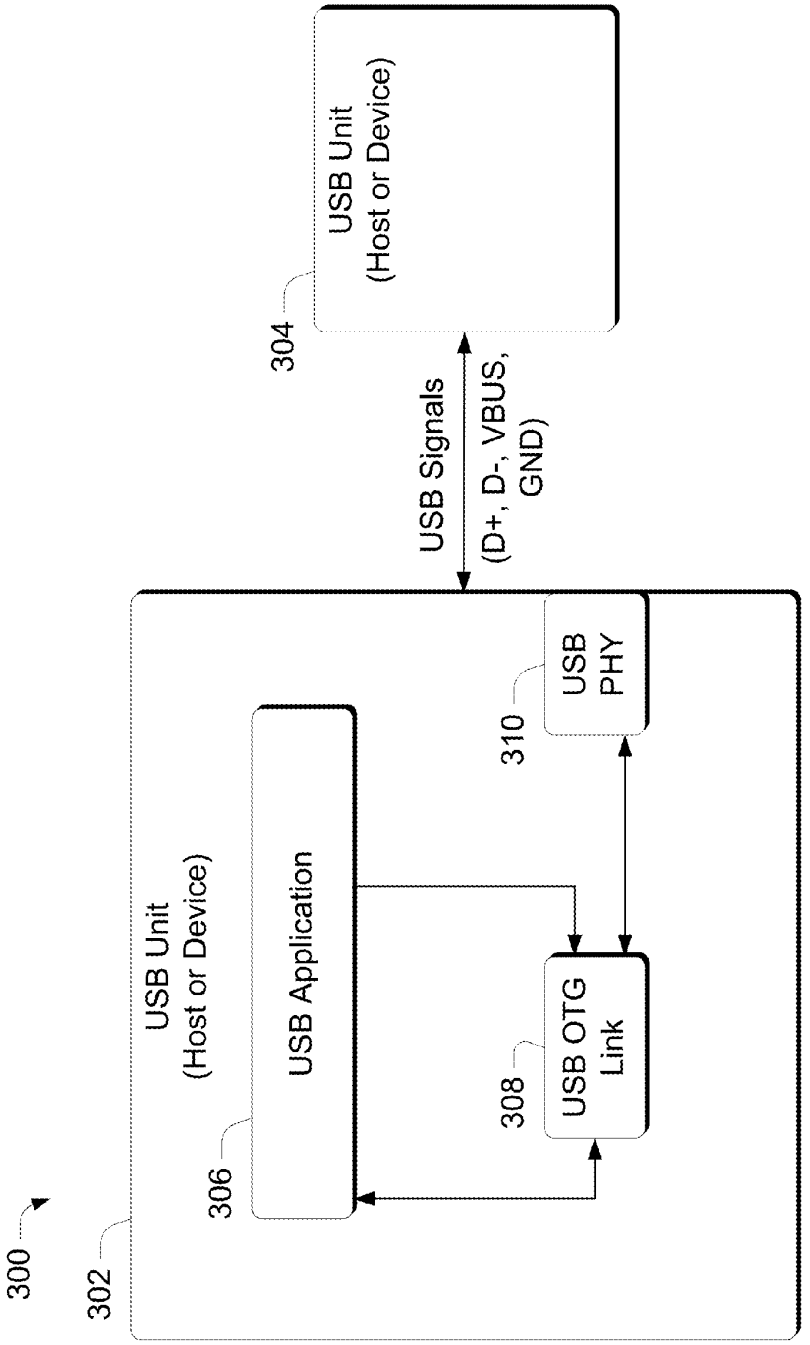
300
302
USB Unit
(Host or Device)
306
USB Application
308
USB OTG
Link
310
USB
PHY
USB Signals
(D+, D-, VBUS,
GND)
304
USB Unit
(Host or Device)

Fig. 3

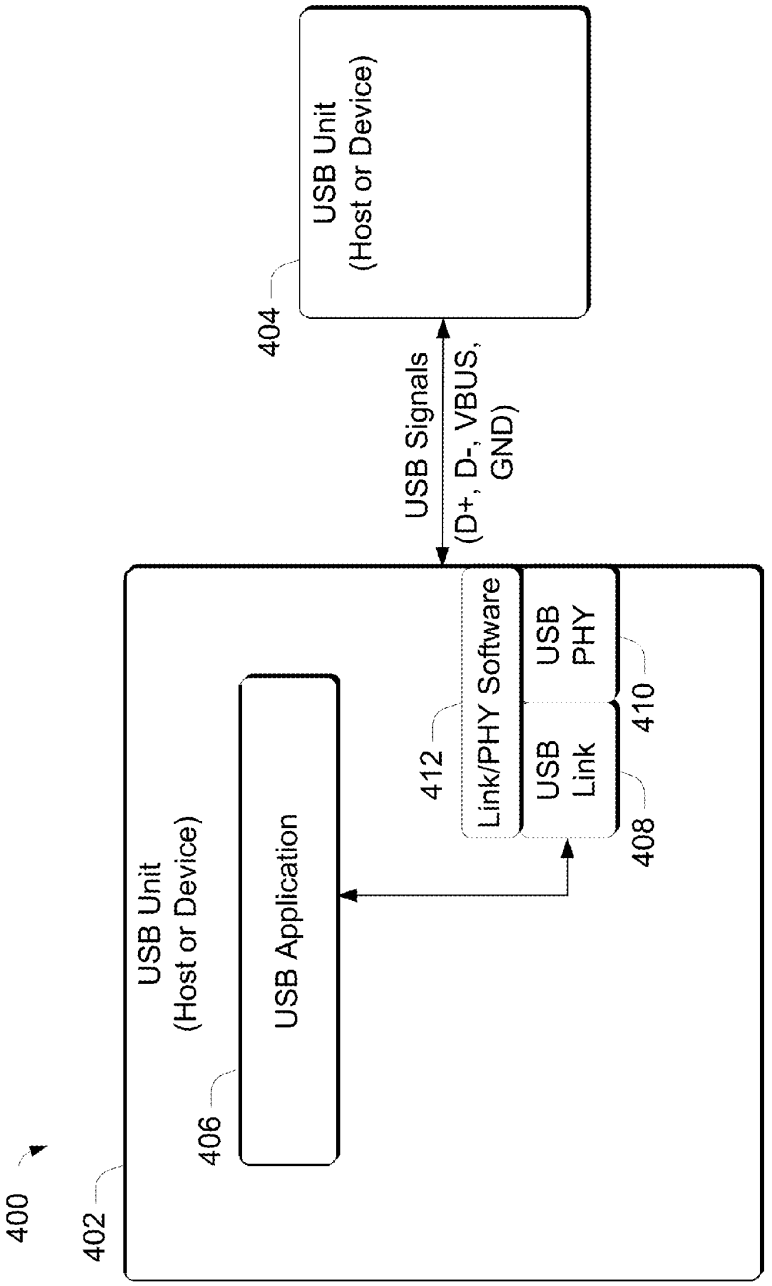
400
402
USB Unit
(Host or Device)
406
USB Application
412
Link/PHY Software
USB
Link
408
USB
PHY
410
USB Signals
(D+, D-, VBUS,
GND)
404
USB Unit
(Host or Device)

Fig. 4

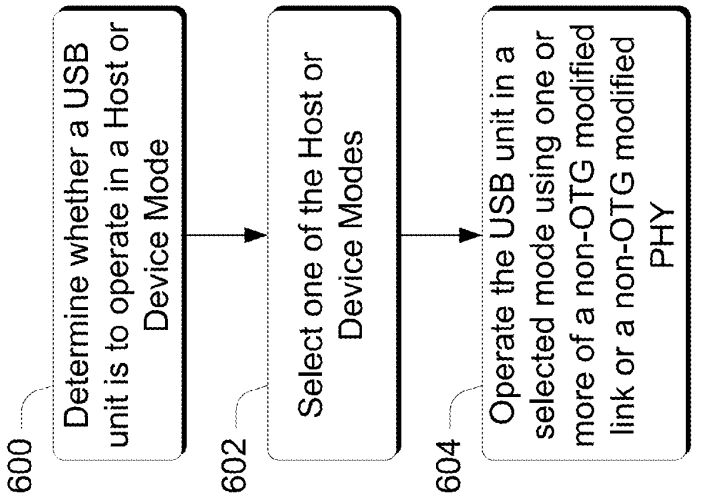
600
Determine whether a USB unit is to operate in a Host or Device Mode
602
Select one of the Host or Device Modes
604
Operate the USB unit in a selected mode using one or more of a non-OTG modified link or a non-OTG modified PHY

Fig. 6

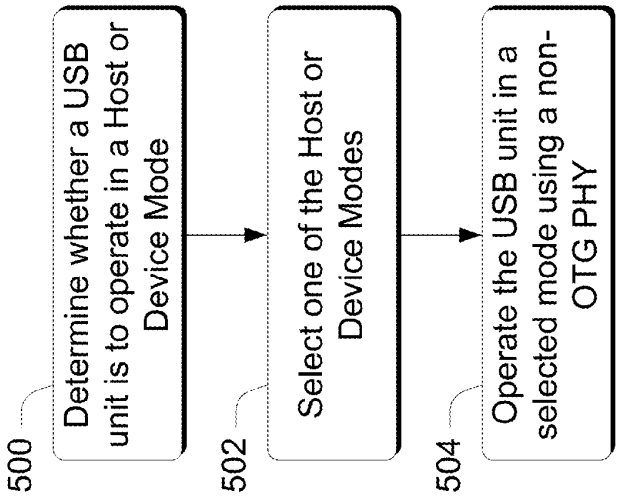
500
Determine whether a USB unit is to operate in a Host or Device Mode
502
Select one of the Host or Device Modes
504
Operate the USB unit in a selected mode using a non-OTG PHY

Fig. 5

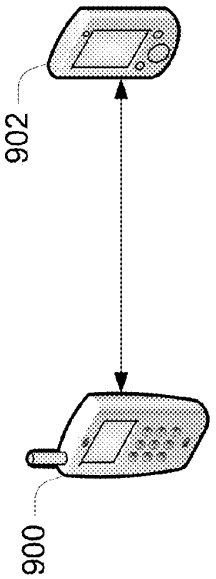

Fig. 9

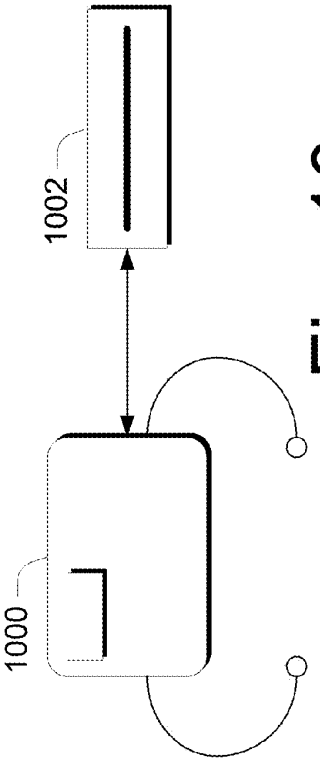

Fig. 10

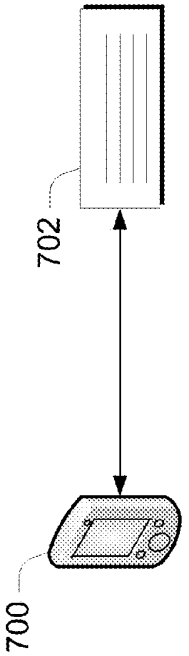

Fig. 7

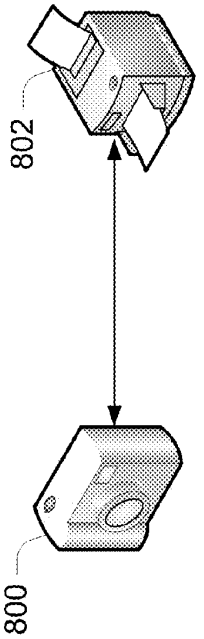

Fig. 8

USB INTERFACE CONFIGURABLE FOR HOST OR DEVICE MODE

RELATED APPLICATION

This application claims priority to U.S. Provisional Application No. 61/050,808, filed on May 6, 2008, the disclosure of which is incorporated by reference herein.

BACKGROUND

The Universal Serial Bus (USB) is an industry standard interface that defines a method of connecting two units (usually a computer and a peripheral device) together and communicating between them. The USB interface on each unit contains a USB link controller (Link) and a USB physical interface circuit (PHY). To communicate, one of the units operates as a USB Host which initiates communication requests between the units, and the other operates as a USB Device which responds to those requests.

When the USB standard was developed, it was assumed that the Host and Device functions were separate and permanent, meaning that a Host unit could never function as a Device unit and vice versa.

In recent years, the USB standard was enhanced to add the possibility of a unit that can function in either Host or Device mode. That capability is known as USB On The Go or OTG. For OTG, additional circuitry is added to the Link and the PHY, an additional signal or signals are added between the PHYs, and a new protocol is defined by which the two units can automatically determine which one of them will operate in Host mode and which will operate in Device mode. This approach utilizes a different PHY, a different connector, and a different cable than that utilized by the standard USB technology.

Another approach to providing a unit with both Device and Host capability would be to provide multiple ports, including separate Host and Device ports. This approach has a disadvantage in that it requires multiple connectors, multiple ASIC pins and the like.

Needless to say, these approaches add overhead and increase the cost associated with devices that are implemented with both Host and Device functionality.

SUMMARY

This Summary is provided to introduce subject matter that is further described below in the Detailed Description and Drawings. Accordingly, the Summary should not be considered to describe essential features nor used to limit the scope of the claimed subject matter.

In one embodiment, a USB unit comprises a mode selection module configured to determine whether the USB unit is to operate in a Host mode or a Device mode and select one of the Host mode or the Device mode; and a non-OTG USB physical interface circuit (PHY) associated with the mode selection module and configured to enable operation in a selected Host mode or Device mode.

In another embodiment, a USB unit comprises a USB OTG Link controller configured to operate in a Host mode or a Device mode; and a non-OTG USB physical interface circuit (PHY) operably connected to the USB OTG Link controller.

In another embodiment, a method comprises determining whether a USB unit is to operate in a Host or Device mode; selecting one of the Host or Device modes; and operating the USB in a selected mode using a non-OTG physical interface circuit (PHY).

In another embodiment, a system comprises means for determining whether a USB unit is to operate in a Host or Device mode; means for selecting one of the Host or Device modes; and means for operating the USB in a selected mode using a non-OTG physical interface circuit (PHY).

BRIEF DESCRIPTION OF THE DRAWINGS

The same numbers are used throughout the drawings to reference like features.

FIG. **1** is a block diagram of an example operating environment in accordance with one or more embodiments.

FIG. **2** illustrates an example system in accordance with one or more embodiments.

FIG. **3** illustrates an example system in accordance with one or more embodiments.

FIG. **4** illustrates an example system in accordance with one or more embodiments.

FIG. **5** is a flow diagram that describes a method in accordance with one or more embodiments.

FIG. **6** is a flow diagram that describes a method in accordance with one or more embodiments.

FIG. **7** illustrates example devices that can serve as USB units in accordance with one or more embodiments.

FIG. **8** illustrates example devices that can serve as USB units in accordance with one or more embodiments.

FIG. **9** illustrates example devices that can serve as USB units in accordance with one or more embodiments.

FIG. **10** illustrates example devices that can serve as USB units in accordance with one or more embodiments.

DETAILED DESCRIPTION

Overview

Various embodiments provide a USB interface that can operate in either a Host or Device mode using standard Link and/or physical interface circuit (PHY) components which, in at least some embodiments, do not have additional circuitry that is conventionally utilized to implement the USB OTG standard.

In the discussion that follows, a section entitled "Operating Environment" is provided and describes one example operating environment in which one or more embodiments can be employed. Following this, a section entitled "Multiplexed Link Controllers" describes one example embodiment in which a Host Link and a Device Link can be multiplexed into a standard USB PHY to provide OTG functionality. Next, a section entitled "OTG Link with Standard PHY" describes an embodiment in which an OTG Link is utilized in connection with a standard USB PHY to operate in a desired mode. Following this, a section entitled "Software/Hardware Hybrid Interface" describes an embodiment in which at least some of the Link controller and/or at least some of the PHY are implemented in software such that parts of the interface that are different between the Host mode and Device mode are implemented in software and can thus be changed as desired to switch between modes. Next, a section entitled "Example Methods" describes example methods in accordance with one or more embodiments. Last, a section entitled "Example USB Units" describes some example USB units that can employ the techniques described below.

Operating Environment

FIG. **1** illustrates an example operating environment in accordance with one or more embodiments generally at **100**. In this example, operating environment **100** includes two USB units **102**, **104**. The USB units **102**, **104** can communi-

cate using USB signals that are conventionally used for USB communication. The USB units **102**, **104** can comprise any suitable type of USB device including, by way of example and not limitation, desktop computing devices, mobile computing devices, mobile consumer electronic products such as personal digital assistants (PDAs), mobile phones, digital cameras, portable storage devices, printers and the like. Examples of USB units are shown and described in FIGS. **7-10** below.

In the illustrated and described embodiments, the USB units **102**, **104** can utilize a USB interface to exchange data. In at least some embodiments, each of the USB units **102**, **104** is configured or configurable as a USB Host or a USB Device. Accordingly, each of the USB units **102**, **104** can, in at least some embodiments, operate in either a Host mode or a Device mode using standard Link and/or PHY components which do not have the additional circuitry that is utilized to implement the USB OTG standard. Yet, by virtue of the configuration of the USB units, each can implement both Host and Device functionality as will become apparent below. Accordingly, each USB unit **102**, **104** can include a mode selection module **106** and a USB PHY **108**, such as those shown for USB unit **102**. In the illustrated example, mode selection module **106** is configured to determine and select a particular mode, such as Host mode or Device mode, and then interact with USB PHY **108** to effect operation of the USB unit **102** in the selected mode. In at least some embodiments, USB PHY **108** is a non-OTG PHY meaning that it is not compliant with the USB OTG standard. The mode selection module **106** can be implemented in connection with any suitable hardware, software, firmware or combination thereof, examples of which are provided below.

Having described an example operating environment, consider now a discussion of various embodiments that can provide Host and Device functionality. At least some of the embodiments described below can utilize a single USB port with a standard PHY that can enable a USB unit to operate in either the Host mode or the Device mode.

Multiplexed Link Controllers

FIG. **2** illustrates an example system in accordance with one or more embodiments generally at **200**. In this example, system **200** includes a USB unit **202** and a USB unit **204**. Each of the USB units **202**, **204** can be configured as described in relation to USB unit **202**.

In the illustrated and described embodiment, USB unit **202** includes a USB application **206**, a USB Host Link **208**, a USB Device Link **210**, a switch **212** and a USB PHY **214**. In this example, a mode selection module can include one or more of the USB application **206**, the USB Host Link **208**, the USB Device Link **210**, or the switch **212**. Switch **212** can be embodied as any suitable type of switch. In at least some embodiments, switch **212** is implemented as a multiplexer. USB application **206** is operably connected or connectable to USB Host and Device Links **208**, **210** respectively, as well as to switch **212**. USB Host Link **208** and USB Device Link **210** are operably connected or connectable to switch **212**. Switch **212** is operably connected or connectable to USB PHY **214** as shown.

In this example, USB Host Link **208** and USB Device Link **210** constitute separate link controllers that are non-OTG link controllers. Specifically, by being non-OTG link controllers, the link controllers are not specifically configured with OTG functionality. Further, the USB PHY **214** is a standard, non-OTG USB PHY that is not specifically configured with OTG functionality. In this example, switch **212** is configured by USB application **206** to selectively connect either USB Host Link **208** or USB Device Link **210** to USB PHY **214** depending on the desired mode of operation. For example, if USB unit **202** is to operate in the Host mode, USB application **206** selects the USB Host Link **208** via switch **212**. Alternately, if USB unit **202** is to operate in the Device mode, USB application **206** selects the USB Device Link **210** via switch **212**. By selecting a particular Link, the switch **212** enables a communication link with USB PHY **214** so that the USB unit **202** can operate in the selected mode.

In at least some embodiments, the USB Host link **208**, USB Device Link **210**, switch **212** and USB PHY **214** can be implemented by an integrated circuitry chip that is able to be pre-configured into a particular mode, e.g., Host mode or Device mode. This permits flexibility in the design of the integrated circuitry chip by enabling either mode to be selected at some point after manufacture of the integrated circuitry chip.

In at least some other embodiments, USB unit **202** can be configured to switchably alternate, in a dynamic fashion, between the Host mode and the Device mode. Such might be the case, for example, when one of the devices is a portable device, such as a PDA or hand-held device, whose role may change. In these embodiments, USB unit **204** may be compliant with OTG technology if some other unit within USB unit **202**, other than USB Host Link **208**, USB Device Link **210**, and USB PHY **214**, provides the additional functionality required for OTG compliance. Such other unit can include the USB application. To accomplish switching in a dynamic fashion, a signal can be provided by a component, such as USB application **206**, to switch **212** to enable switch **212** to select a particular mode. In this embodiment, both the USB Host Link **208** and USB Device Link **210** can be standard hardware components. The switch **212** enables mode switching at times other than manufacture time such as, by way of example and not limitation, at power up or more frequently during operation.

To accomplish switching in the manner described above, the component or USB application **206** is knowledgeable of OTG-related protocols and can act on OTG-related communications to effect a mode switch. Examples of OTG-related protocols include Host Negotiation Protocol (HNP) and Session Request Protocol (SRP). HNP describes a way for two USB units to communicate with one another to decide which unit is going to act as a Host and which unit is going to act as a Device. SRP deals with a negotiation protocol in which, in some examples, devices can conserve battery power by shutting off their buses and ascertaining when to wake up and communicate with other devices.

OTG Link with Standard PHY

FIG. **3** illustrates an example system in accordance with one or more embodiments generally at **300**. In this example, system **300** includes a USB unit **302** and a USB unit **304**. Each of the USB units **302**, **304** can be configured as described in relation to USB unit **302**.

In the illustrated and described embodiment, USB unit **302** includes a USB application **306**, a USB OTG Link **308**, and a USB PHY **310**. In this example, a mode selection module can include one or more of the application **306** or the USB OTG Link **308**. USB application **306** is operably connected or connectable to USB OTG Link **308**. In the illustrated example, the connection between USB application **306** and USB OTG Link **308** entering to the right side of the USB OTG Link **308** represents additional signals that the USB OTG link **308** requires to operate with an OTG PHY but which the non-OTG PHY does not have. In this embodiment, those signals are observed and/or controlled by the USB application **306** so that the USB application **306** provides the additional PHY functionality that is not provided by the non-OTG

PHY. The USB OTG Link **308** is operably connected or connectable to USB PHY **310**. In this example, USB OTG Link **308** is OTG-compliant, meaning that the Link **308** is configured to operate in the Host mode or the Device mode, as well as implement other aspects of OTG functionality. However, USB application **306** is configured to control the USB OTG Link **308** so that it can communicate with a standard, non-OTG USB PHY **310** and use a standard USB cable for the connection between USB units **302**, **304**. Details of how the control actually occurs can depend on the specifics of the USB OTG Link **308**. For instance, a USB OTG Link **308** which includes control registers for switching modes may need the application to perform some register writes to set the USB OTG Link **308** in a different mode. A USB OTG Link **308** with less invasive control capability may require the application to control signals (via the USB application-to-USB OTG Link connection on the right) to emulate portions of the OTG protocol involved in changing modes, e.g., emulating an OTG identification pin to set a particular mode. Other paradigms are possible also.

In the above-described embodiment, communication between the USB OTG Link **308** and the USB PHY **310** takes place using standard USB communication protocols. That is, once a particular mode is selected via the USB OTG Link **308**, communication in that particular mode with the USB PHY **310** takes place using standard USB communication protocols. In this case, OTG-specific communication, such as HNP or SRP communication, happens between the USB application **306** or some other component and the USB OTG Link **308**.

In this embodiment, and by virtue of using the USB OTG Link **308**, less circuitry is required to be employed than in the embodiment described just above. Specifically, because only one Link circuit **308** is used, the additional Link circuitry (**208** or **210**) utilized in the above-described embodiment can be eliminated. In addition, improvements over standard OTG systems can include the use of a less complex standard USB PHY, rather than a more complex OTG-compliant PHY. Further, standard USB cables and standard USB signals can be utilized while avoiding the additional overhead needed for OTG signaling.

In the illustrated and described embodiment, the USB application **306** can be implemented as any suitable USB application including, by way of example and not limitation, a host software driver, a device software driver, or a driver that functions as both host and device driver.

In at least some embodiments, the USB OTG Link controller **308** and USB PHY **310** can be implemented by an integrated circuitry chip that is pre configurable into a particular mode, e.g., Host mode or Device mode. This permits flexibility in the design of the integrated circuitry chip by enabling either mode to be selected at some point after manufacture of the integrated circuitry chip.

In at least some other embodiments, USB unit **302** can be configured to switchably alternate, in a dynamic fashion, between the Host mode and the Device mode. In these embodiments, USB unit **304** may be compliant with OTG technology if some other unit within USB unit **302**, other than USB OTG Link **308** and USB PHY **310**, provides the additional functionality required for OTG compliance. Such other unit can include the USB application **306**.

Software/Hardware Hybrid Interface

FIG. **4** illustrates an example system in accordance with one or more embodiments generally at **400**. In this example, system **400** includes a USB unit **402** and a USB unit **404**. Each of the USB units **402**, **404** can be configured as described in relation to USB unit **402**.

In the illustrated and described embodiment, USB unit **402** includes a USB application **406**, a USB link **408**, a USB PHY **410**, and Link/PHY software **412** embodied on a tangible computer-readable medium. In this example, a mode selection module can include one or more of the USB application **406**, the USB link **408**, the USB PHY **410**, and the Link/PHY software **412**. In at least some embodiments, at least some of the functionality performed by USB link **408** and/or USB PHY **410** can be implemented in software by Link/PHY software **412**. For example, portions of the USB link **408** and USB PHY **410** that are different as between the Host and Device modes can be implemented in software and can thus be changed as desired. Specifically, those portions of the USB link **408** and USB PHY **410** that are specific to the Host and/or Device modes can be implemented by Link/PHY software **412**. In one example, the USB link **408**, USB PHY **410**, and Link/PHY software **412** together provide all the control and configuration so that together they provide a USB interface capable of operating in either mode so that collectively, they appear as a true OTG interface to a standard OTG-capable application. The application then operates as if a real OTG link and OTG PHY were present. For example, the Link/PHY software **412** can, in some embodiments, vary the signal levels on the USB D+ and D− wires or activate additional pull-down resistors on the D+ and D− wires when the USB application **406** activates the Host mode on the application-link interface. Alternately or additionally, the Link/PHY software **412** can, in some embodiments, activate additional, non-standard functionality in the USB Link **408** or USB PHY **410** that is utilized to switch modes.

In another example, USB application **406** can be either Host- or Device-capable, but not OTG capable. Alternately or additionally, there may be two independent USB applications, one of which is a pure Host application and the other of which is a pure Device application. Either one of these applications can run depending on the particular mode. In either case, the Link/PHY software **412**, USB Link **408**, and USB PHY **410** act either purely as a Host or Device, depending on the mode.

In at least some embodiments, the Link/PHY software **412** can handle transaction-level protocol. For example, a USB Out transaction is comprised of, in general, an Out token (from Host to Device), a data packet (from Host to Device), and a handshake (from Device to Host). This transaction is used to send data from a Host to a Device. A USB In transaction is comprised of, in general, an In token (from Host to Device), a data packet (from Device to Host), and a handshake (from Host to Device). This transaction is used to send data from a Device to a Host. When operating in Host mode, the Link/PHY software **412** initiates the Out token including maintaining knowledge of a target device's address, target endpoint number, communications capabilities and the like. The Link/PHY software **412** then initiates building and transmitting a data packet, waits for a handshake, and processes associated results accordingly. However, when operating in Device mode, the Link/PHY software **412** detects an incoming In token, then initiates the building and transmitting of a data packet, waits for a handshake, and processes those results accordingly. In both cases, the process of sending data is similar and is composed of similar smaller operations. However, the overall flow is somewhat different. Specifically, the Host decides what actions to take and then initiates those actions, while the Device waits for a request from the Host and then acts on the request. In these instances, the Device can transmit ACK, NAK, and NYET handshakes, while the Host only sends an ACK. In this embodiment, all of these differences are implemented by the Link/PHY software **412**. Com-

mon features such as building and transmitting packets are implemented in hardware, while the high-level protocol control is implemented in software.

Using Link/PHY software **412** as described above can simplify the design of the USB link **408** and/or the USB PHY **410**. Specifically, in at least some embodiments, the design of the USB link **408** and/or the USB PHY **410** can be modified to include those components that are common to the Host and Device modes. Such components can include, by way of example and not limitation, a phase-locked loop (PLL), a serializer/deserializer (SERDES), data encoding and decoding circuits, data buffers, current source circuits, voltage reference circuits, and the like. Further, in at least some embodiments many of the protocol components can be implemented in hardware as well. These protocol components include, by way of example and not limitation, NRZI encoding components, bit stuffing components, CRC generation and checking components, packet formation and stripping components, address/endpoint management components, status generation and tracking components, and the like.

Example Methods

FIG. **5** is a flow diagram that describes steps in a method in accordance with one or more embodiments. The method can be implemented in connection with any suitable hardware, software, firmware, or combination thereof. In at least some embodiments, the method can be implemented by a suitably-configured USB unit such as those described above in FIGS. **2** and/or **3**.

Step **500** determines whether a USB unit is to operate in a Host or a Device mode. This step can be performed in any suitable way. For example, a USB unit might select Host or Device mode based on a choice by the user, e.g. a button press. Alternately or additionally, the USB unit can passively monitor the signaling which another USB unit presents on VBUS, D+, and D− after the USB cable is connected, determine if the other USB unit is acting as a Host or Device, and then choose the alternate mode to allow for communication (e.g., choose Host mode if the other unit is acting in the Device mode and vice versa). Alternately or additionally, the USB unit can actively drive Host signaling onto the USB interface after connection, determine if the other USB unit responds, and if not then select the other mode. Alternately or additionally, mode selection can also be based on the USB connection. For example, OTG utilizes an ID pin in the connector to tell whether the unit is connected as a Host or Device. External hardware, such as a controller, can read the state of a pin, where the pin could be tied high to select one mode and tied low to select the other mode. Mode selection can also be implemented using internal hardware such as an internal ROM or fuse bit, or through embedded software that uses a value programmed into boot ROM.

Step **502** selects one of the Host or Device modes. This step can be performed in any suitable way examples of which are provided just above. For example, a particular mode can be selected under the influence of a USB application executing on the USB unit. In the FIG. **2** example above, the USB application **206** interfaces with a switch **212** effective to select a particular USB Host link **208** or USB Device link **210**. Alternately or additionally, a particular mode can be selected through a USB application's interaction with a USB OTG Link, such as the one shown in FIG. **3** at **308**. Recall that in the FIG. **3** example, the USB OTG Link **308** is OTG-compliant, meaning that it can operate in either the Host or Device modes. Accordingly, the USB application **306** can interface with the USB OTG Link **308** effective to select a particular mode.

Having selected a particular mode, step **504** operates the USB unit in a selected mode using a non-OTG PHY.

FIG. **6** is a flow diagram that describes steps in a method in accordance with one or more embodiments. The method can be implemented in connection with any suitable hardware, software, firmware, or combination thereof. In at least some embodiments, the method can be implemented by a suitably-configured USB unit such as the one described above in FIG. **4**.

Step **600** determines whether a USB unit is to operate in a Host or a Device mode. This step can be performed in any suitable way examples of which are provided above.

Step **602** selects one of the Host or Device modes. This step can be performed in any suitable way. For example, a particular mode can be selected under the influence of a USB application executing on the USB unit.

Step **604** operates the USB unit in a selected mode using one or more of a non-OTG modified link or a non-OTG modified PHY. In the example of FIG. **4**, the USB Link **408** and/or the USB PHY **410** can be modified by virtue of having functionality that is different as between Host and Device modes implemented by Link/PHY Software **412**.

Having considered some example methods, consider now a discussion of some example USB units.

Example USB Units

FIGS. **7-10** illustrate some example devices that can serve as USB units in accordance with one or more embodiments. The illustrated and described devices can be configured in accordance with any of the embodiments described above.

FIG. **7** illustrates a personal digital assistant **700** connected to a keyboard **702**. FIG. **8** illustrates a camera **800** connected to a printer **802**. FIG. **9** illustrates a phone **900** connected to a personal digital assistant **902**. FIG. **10** illustrates an MP3 player **1000** connected to a hard disk **1002**.

It is to be appreciated and understood that the example devices illustrated in FIGS. **7-10** are but examples only. Accordingly, other devices can serve as USB units without departing from the spirit and scope of the claimed subject matter.

CONCLUSION

Various embodiments described above provide a USB interface that can operate in either a Host or Device mode using standard Link and/or physical interface circuit (PHY) components which, in at least some embodiments, do not have additional circuitry that is utilized to implement the USB OTG standard. The various embodiments described above can permit, in at least some instances, less expensive and more reliable standard non-OTG components to be utilized. This can mitigate concerns associated with particular OTG components which, as of this time, are relatively new and not as widely available as the non-OTG components. Further, some applications may require Host or Device capability, but may not need additional OTG features such as on-the-fly role switching. In these instances, the various embodiments can enable such applications to operate without extraneous hardware and/or software overhead.

In addition, OTG requires measurement and control of different voltages than are required for use by standard USB. Typically, this means that the PHY requires an additional supply voltage and additional analog drive and sensing circuitry. Further, OTG may require more complex protection from over-voltage and transients as well. In at least some embodiments described above, additional voltage supplies, protections, and other circuitry beyond that used in standard USB is not required.

Although the subject matter has been described in language specific to structural features and/or methodological acts, it is to be understood that the subject matter defined in the appended claims is not necessarily limited to the specific features or acts described above. Rather, the specific features and acts described above are disclosed as example forms of implementing the claims.

What is claimed is:

1. A Universal Serial Bus (USB) unit comprising:

a USB On-The-Go (OTG) Link controller having two modes of operation, the modes of operation including a Host mode and a Device mode, the USB OTG Link controller configured to:

operate in the Host mode responsive to the USB unit being connected to a USB device; or

operate in the Device mode responsive to the USB unit being connected to a USB host;

a non-OTG USB physical interface circuit (PHY) connected directly to the USB OTG Link controller, the non-OTG USB PHY including analog drive circuitry and sensing circuitry for communication via a USB bus; and

hardware computer-readable storage media comprising software of an interface component that, when executed, implements the Host mode or the Device mode in the non-OTG USB PHY.

2. The USB unit of claim **1** further comprising a USB application configured to control the USB OTG Link controller effective to select the Host mode or the Device mode.

3. The USB unit of claim **2**, wherein USB data communication between the OTG Link controller and the non-OTG USB PHY does not pass through a multiplexor.

4. A method comprising:

determining whether a Universal Serial Bus (USB) unit is to operate in a Host or a Device mode;

selecting one of the Host or the Device modes; and

operating, via a software interface component of the USB unit, the USB unit in a selected mode using a non-On-The-Go (OTG) physical interface circuit (PHY) connected directly to an OTG Link controller, the non-OTG PHY including analog drive circuitry and sensing circuitry for communication via the USB bus, the software interface component embodied on hardware computer-readable storage media of the USB unit.

5. The method of claim **4**, wherein the selecting is performed under the influence of a USB application.

6. The method of claim **5**, wherein the selecting is performed by the USB application to cause selection of a USB Host mode or a USB Device mode of the OTG Link controller.

7. The method of claim **4**, wherein USB data is communicated directly between the non-OTG PHY and the OTG Link controller.

8. The method of claim **7**, wherein the USB data is not communicated via a multiplexor or switch.

9. The method of claim **5**, wherein the selecting is performed through the USB application communicating with the OTG link controller.

10. The method of claim **5**, wherein OTG specific data is communicated between the USB application and the OTG Link controller.

11. The method of claim **4**, wherein the OTG specific data includes host negotiation protocol data or session request protocol data.

12. The method of claim **4**, wherein the operating is performed using, at least in part, Link/PHY software that is configured to implement functions that are specific to the Host mode and the Device mode.

13. The method of claim **4**, wherein the OTG Link controller is a partial OTG Link controller configured to implement Link controller functionalities common to the Host mode and the Device mode.

14. A Universal Serial Bus (USB) unit comprising:

a partial non-On-The-Go (OTG) link controller configured to implement Link controller functionalities common to a Host mode and a Device mode of operation;

a partial non-OTG physical interface circuit (PHY) connected directly to the partial OTG Link controller and configured to implement PHY functionalities common to the Host mode and the Device mode of operation, the partial non-OTG PHY including analog drive circuitry and sensing circuitry for communication via a USB bus;

hardware computer-readable storage media comprising Link/PHY software that, when executed, implements Link/PHY functionalities that are specific to the Host mode or the Device mode of operation and to execute the Link/PHY software to operate the partial OTG Link controller and the partial non-OTG PHY in the selected Host mode or the selected Device mode of operation.

15. The USB unit of claim **14**, wherein the selected Host mode or the selected Device mode of operation appears as an OTG mode of operation to an OTG capable application.

16. The USB unit of claim **14**, wherein when executed, the Link/PHY software further implements functionalities associated with transaction-level protocols for the Host mode or the Device mode of operation.

17. The USB unit of claim **16**, wherein the functionalities associated with transaction-level protocols for the Host mode include functionalities for initiating an Out token to a USB Device, communicating data with the USB Device, and performing a handshake with the USB Device.

18. The USB unit of claim **14**, wherein USB data is communicated directly between the partial non-On-The-Go (OTG) Link controller and the partial non-OTG PHY.

19. The USB unit of claim **18**, wherein the USB data is not communicated through a multiplexor or a switch.

20. The USB unit of claim **14**, wherein the partial non-OTG Link controller and partial non-OTG PHY are embodied as a single integrated circuit.

* * * * *