US 20080005262A1

(19) United States

(12) Patent Application Publication

(10) Pub. No.: US 2008/0005262 A1

(43) Pub. Date: Jan. 3, 2008

Wurzburg et al.

(54) PERIPHERAL SHARING USB HUB FOR A WIRELESS HOST

(76) Inventors: **Henry Wurzburg**, Austin, TX (US); **Mark R. Bohm**, Village of Bear Creek, TX (US); **Mark Y. Fu**, Newark, CA (US)

Correspondence Address:
MEYERTONS, HOOD, KIVLIN, KOWERT & GOETZEL, P.C.
P.O. BOX 398
AUSTIN, TX 78767-0398

(21) Appl. No.: **11/424,772**

(22) Filed: **Jun. 16, 2006**

Publication Classification

(51) **Int. Cl.**
G06F 15/16 (2006.01)

(52) **U.S. Cl.** **709/217**

(57) **ABSTRACT**

In various embodiments, a wireless host and a wired host may communicate with downstream devices through a USB switching hub. A wireless host/wireless bridge may be temporarily physically coupled to an upstream port of the USB switching hub to complete association with another wireless bridge coupled to the USB switching hub as a downstream device through a downstream port. During association, the host and downstream wireless bridge may exchange an encryption key to be used for future wireless communications. After association, the wireless host may be disconnected from the USB switching hub to communicate remotely. In some embodiments, the wireless host may not need to be physically coupled to the USB switching hub during association.

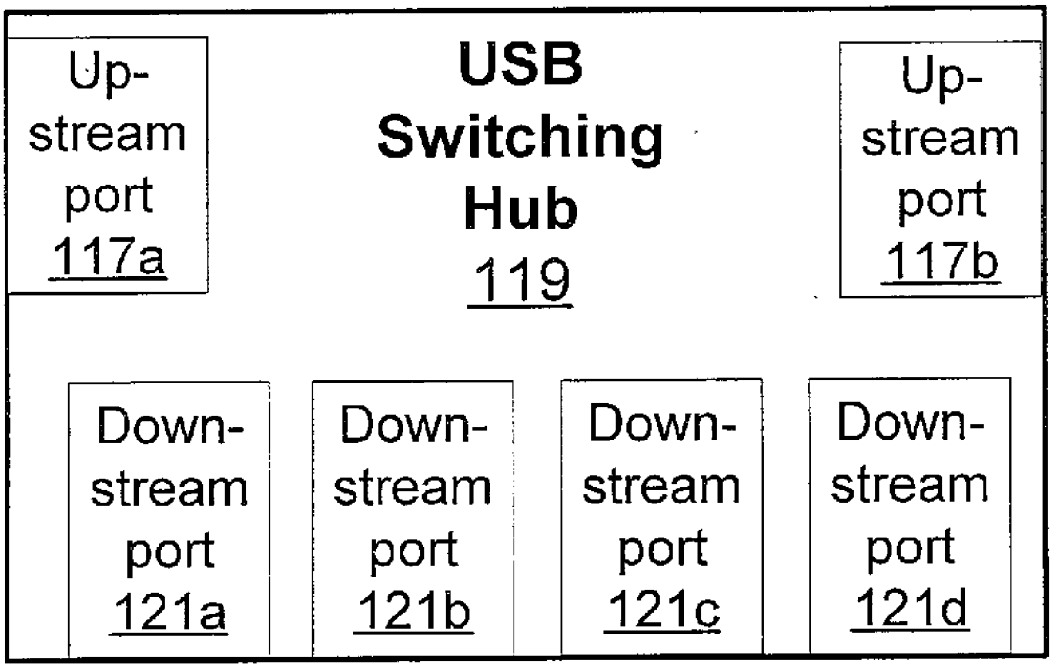

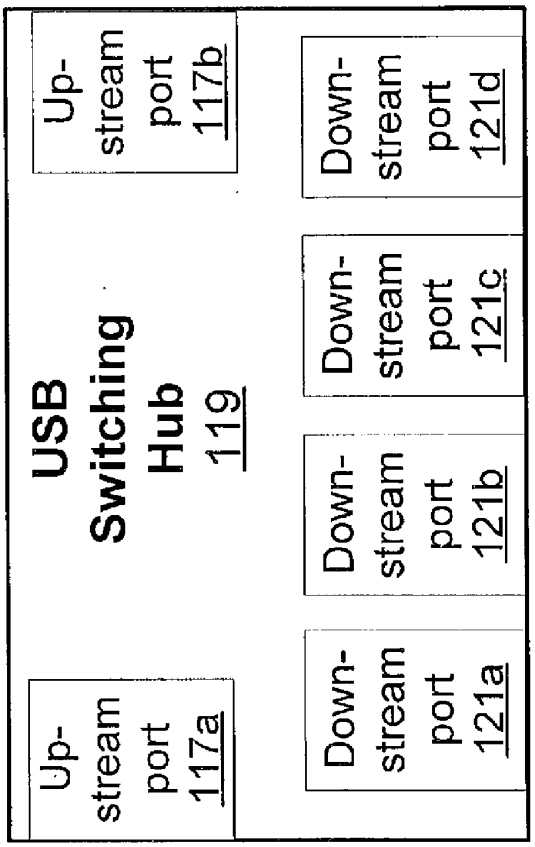
Up-stream port 117a
USB Switching Hub 119
Up-stream port 117b
Down-stream port 121a
Down-stream port 121b
Down-stream port 121c
Down-stream port 121d

FIG. 1

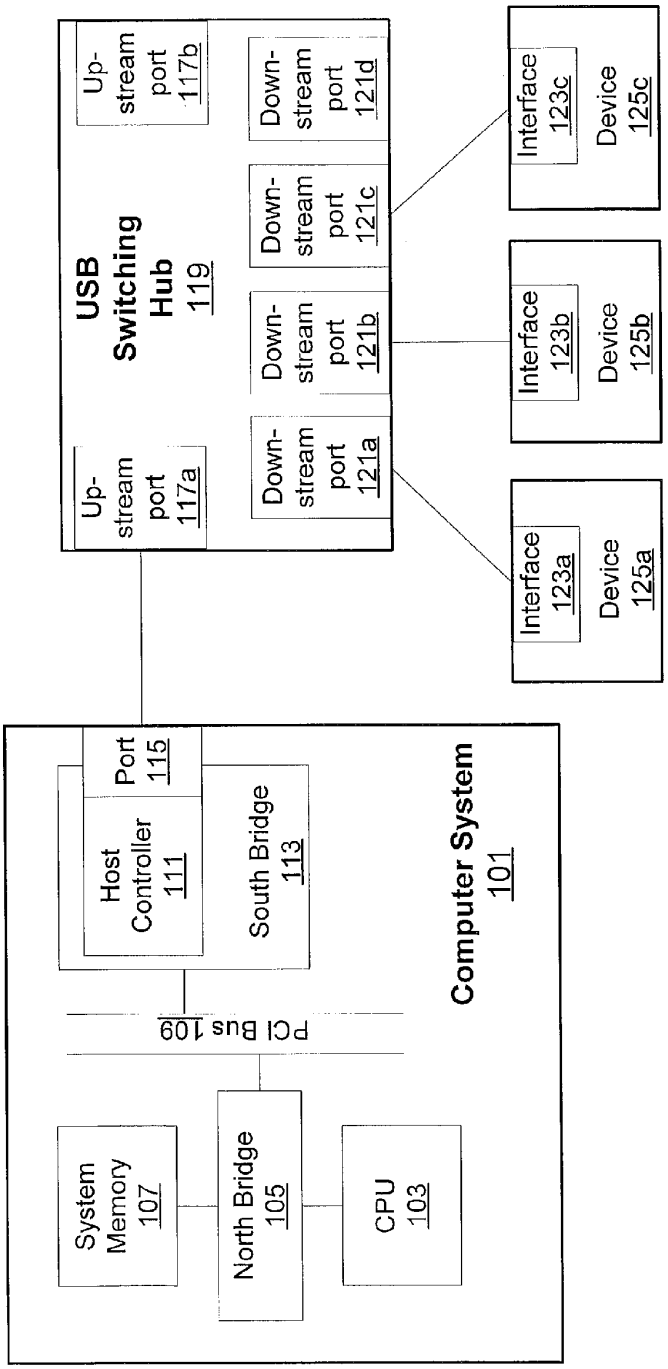
Computer System
101
System Memory
107
North Bridge
105
CPU
103
PCI Bus 109
Host Controller
111
Port
115
South Bridge
113
USB Switching Hub
119
Up-stream port
117a
Up-stream port
117b
Down-stream port
121a
Down-stream port
121b
Down-stream port
121c
Down-stream port
121d
Interface
123a
Interface
123b
Interface
123c
Device
125a
Device
125b
Device
125c

FIG. 2

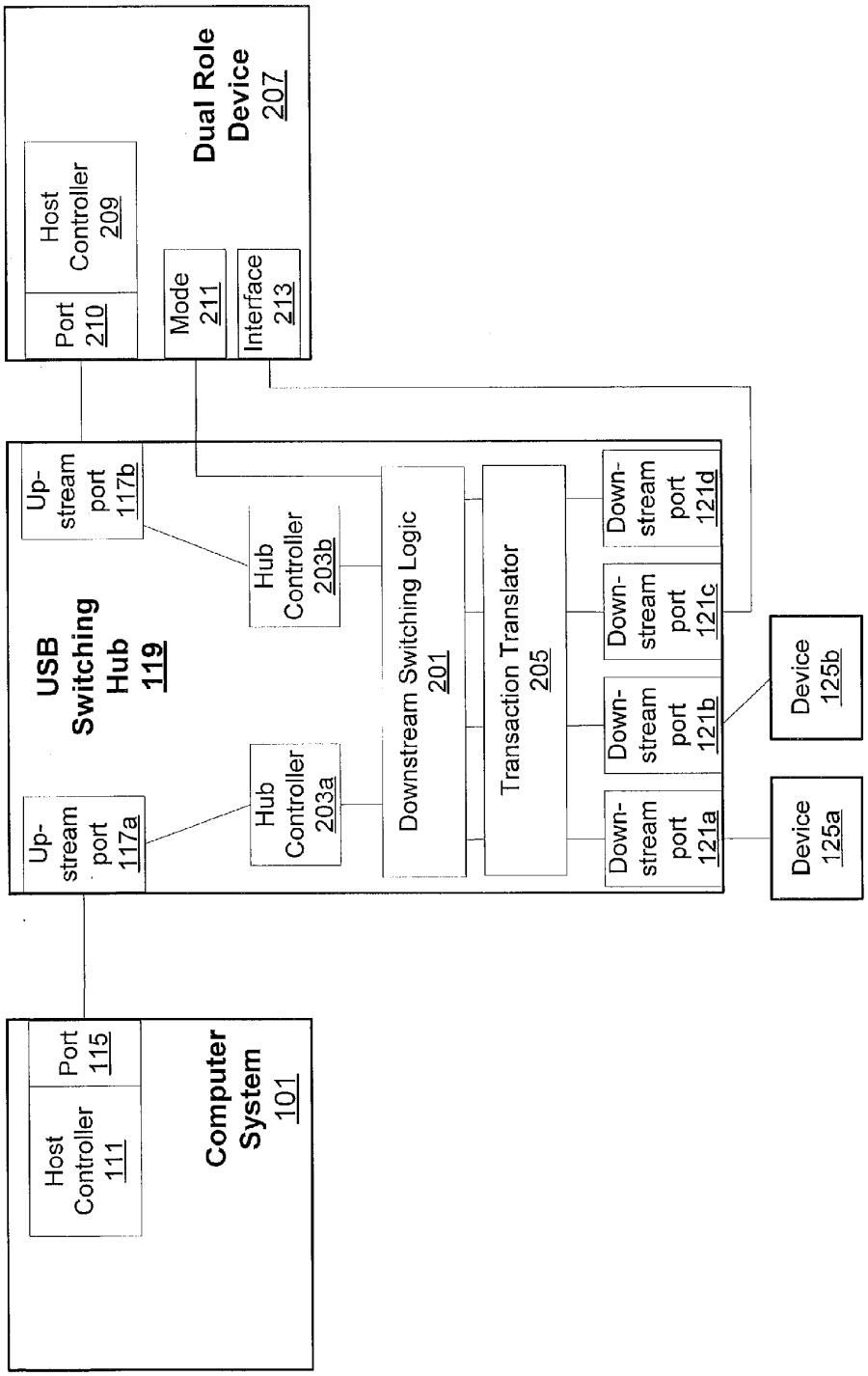
Dual Role Device 207
Host Controller 209
Port 210
Mode 211
Interface 213
USB Switching Hub 119
Up-stream port 117b
Up-stream port 117a
Hub Controller 203b
Hub Controller 203a
Downstream Switching Logic 201
Transaction Translator 205
Down-stream port 121d
Down-stream port 121c
Down-stream port 121b
Down-stream port 121a
Device 125b
Device 125a
Computer System 101
Host Controller 111
Port 115

FIG. 3

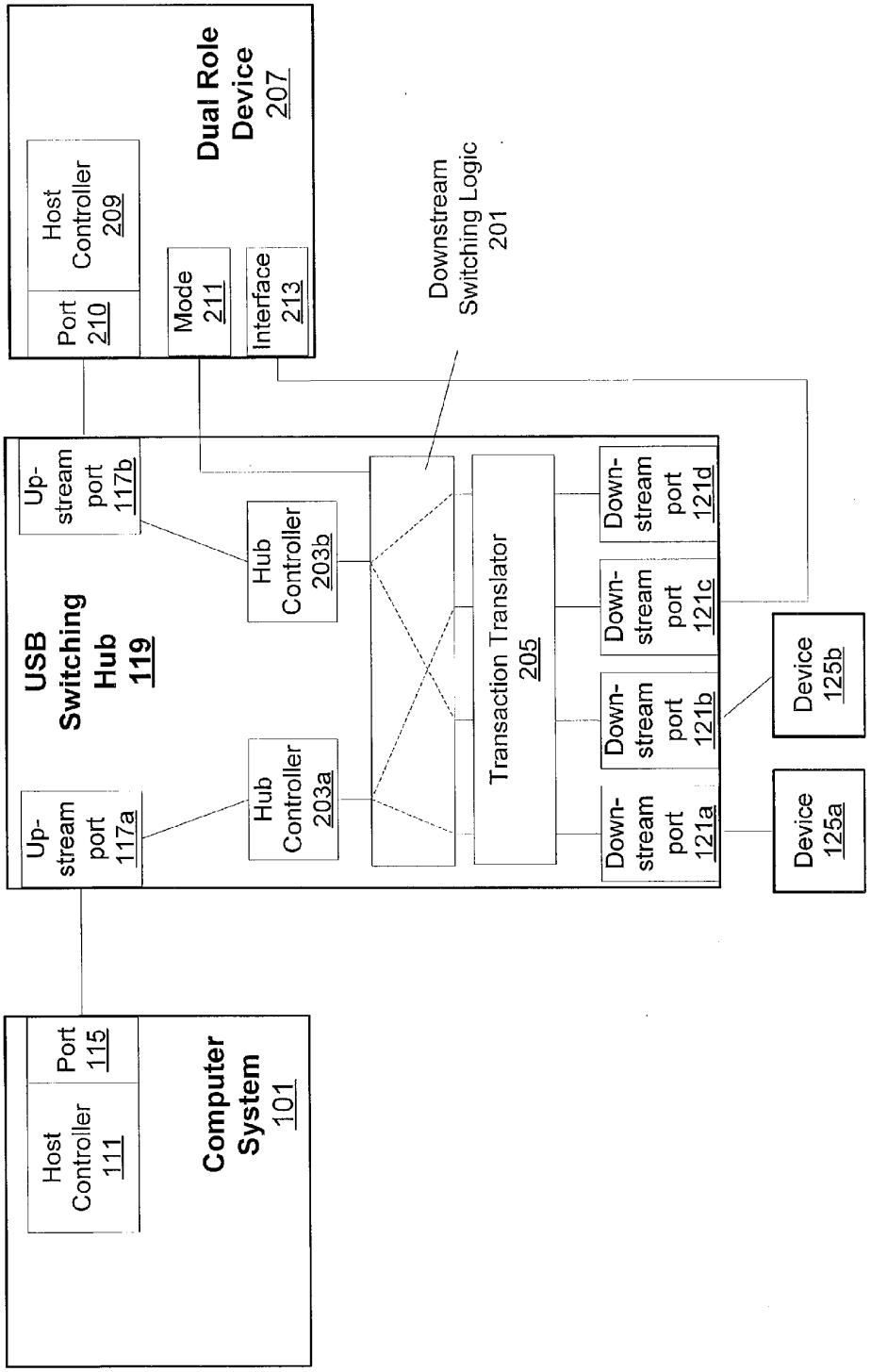
Dual Role Device 207
Host Controller 209
Port 210
Mode 211
Interface 213
Downstream Switching Logic 201
USB Switching Hub 119
Up-stream port 117b
Up-stream port 117a
Hub Controller 203b
Hub Controller 203a
Transaction Translator 205
Down-stream port 121d
Down-stream port 121c
Down-stream port 121b
Down-stream port 121a
Device 125b
Device 125a
Computer System 101
Host Controller 111
Port 115

FIG. 4a

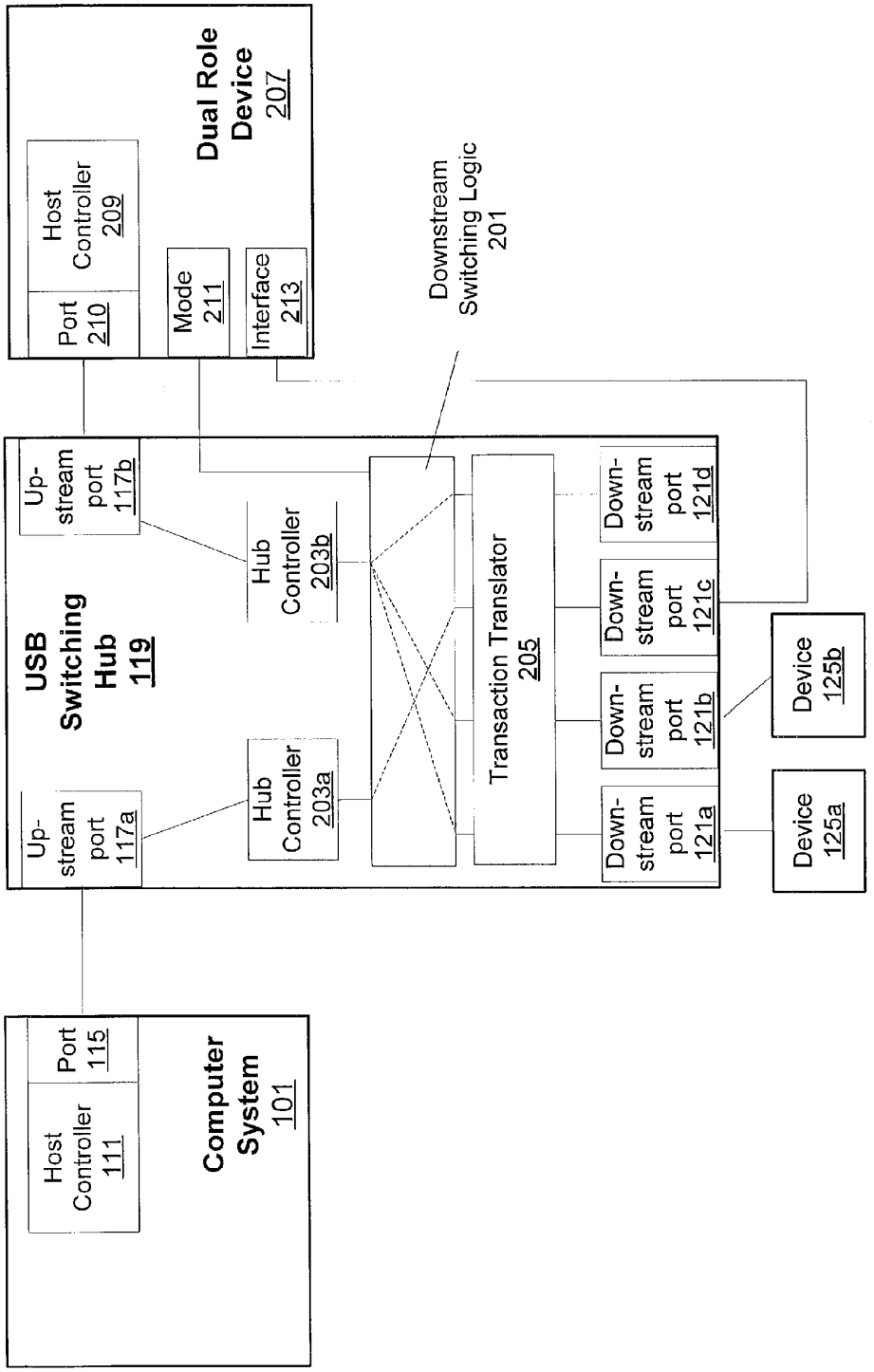
Dual Role Device 207
Host Controller 209
Port 210
Mode 211
Interface 213
Downstream Switching Logic 201
USB Switching Hub 119
Up-stream port 117b
Up-stream port 117a
Hub Controller 203b
Hub Controller 203a
Transaction Translator 205
Down-stream port 121d
Down-stream port 121c
Down-stream port 121b
Down-stream port 121a
Device 125b
Device 125a
Computer System 101
Host Controller 111
Port 115

FIG. 4b

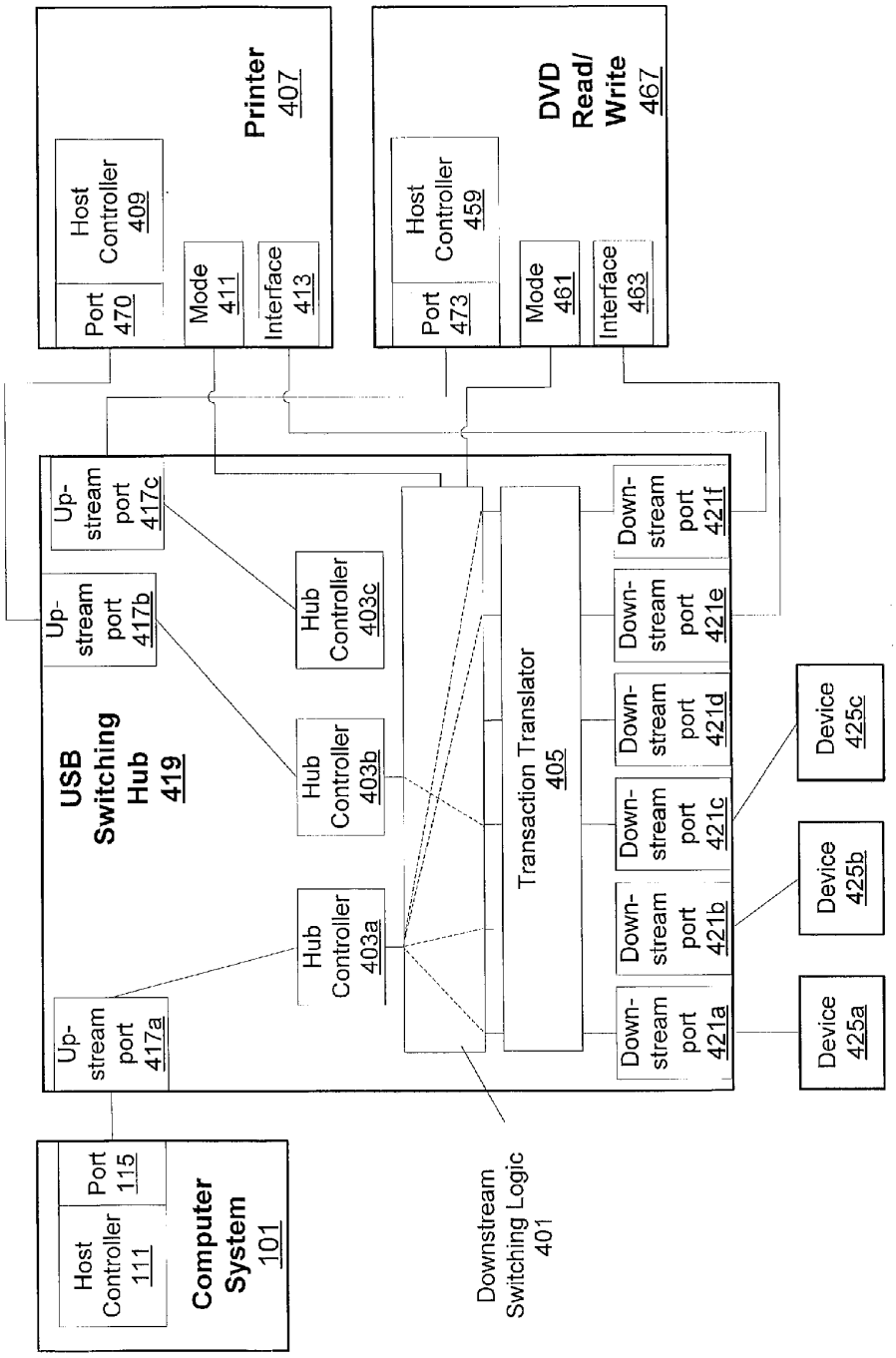
Printer
407
Host Controller
409
Port
470
Mode
411
Interface
413
DVD Read/ Write
467
Host Controller
459
Port
473
Mode
461
Interface
463
USB Switching Hub
419
Up-stream port
417a
Up-stream port
417b
Up-stream port
417c
Hub Controller
403a
Hub Controller
403b
Hub Controller
403c
Transaction Translator
405
Down-stream port
421a
Down-stream port
421b
Down-stream port
421c
Down-stream port
421d
Down-stream port
421e
Down-stream port
421f
Device
425a
Device
425b
Device
425c
Computer System
101
Host Controller
111
Port
115
Downstream Switching Logic
401

FIG. 5a

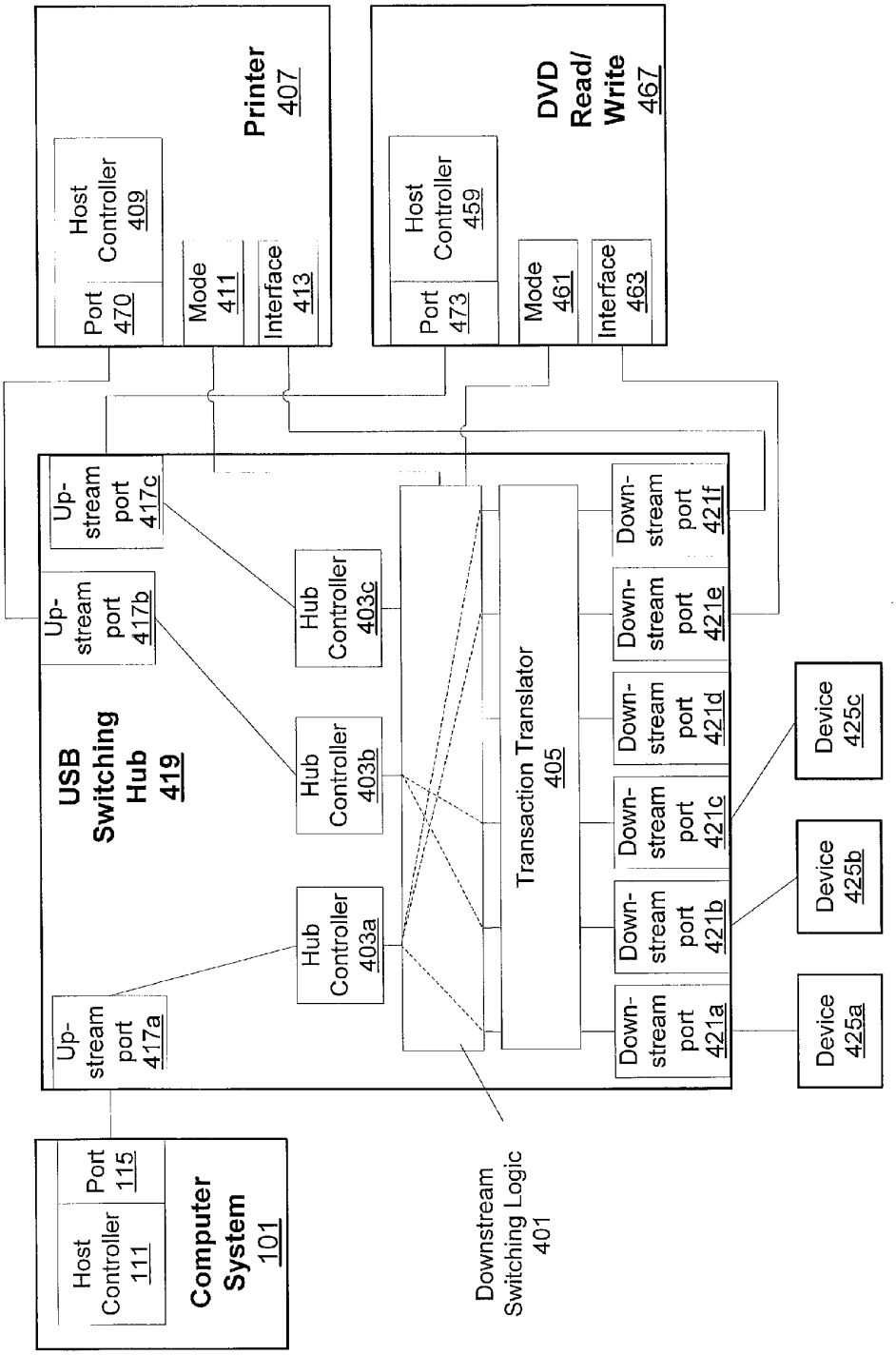
Printer
407
Host Controller
409
Port
470
Mode
411
Interface
413
DVD Read/ Write
467
Host Controller
459
Port
473
Mode
461
Interface
463
USB Switching Hub
419
Up-stream port 417a
Up-stream port 417b
Up-stream port 417c
Hub Controller 403a
Hub Controller 403b
Hub Controller 403c
Transaction Translator
405
Down-stream port 421a
Down-stream port 421b
Down-stream port 421c
Down-stream port 421d
Down-stream port 421e
Down-stream port 421f
Device 425a
Device 425b
Device 425c
Computer System
101
Host Controller
111
Port
115
Downstream Switching Logic
401

FIG. 5b

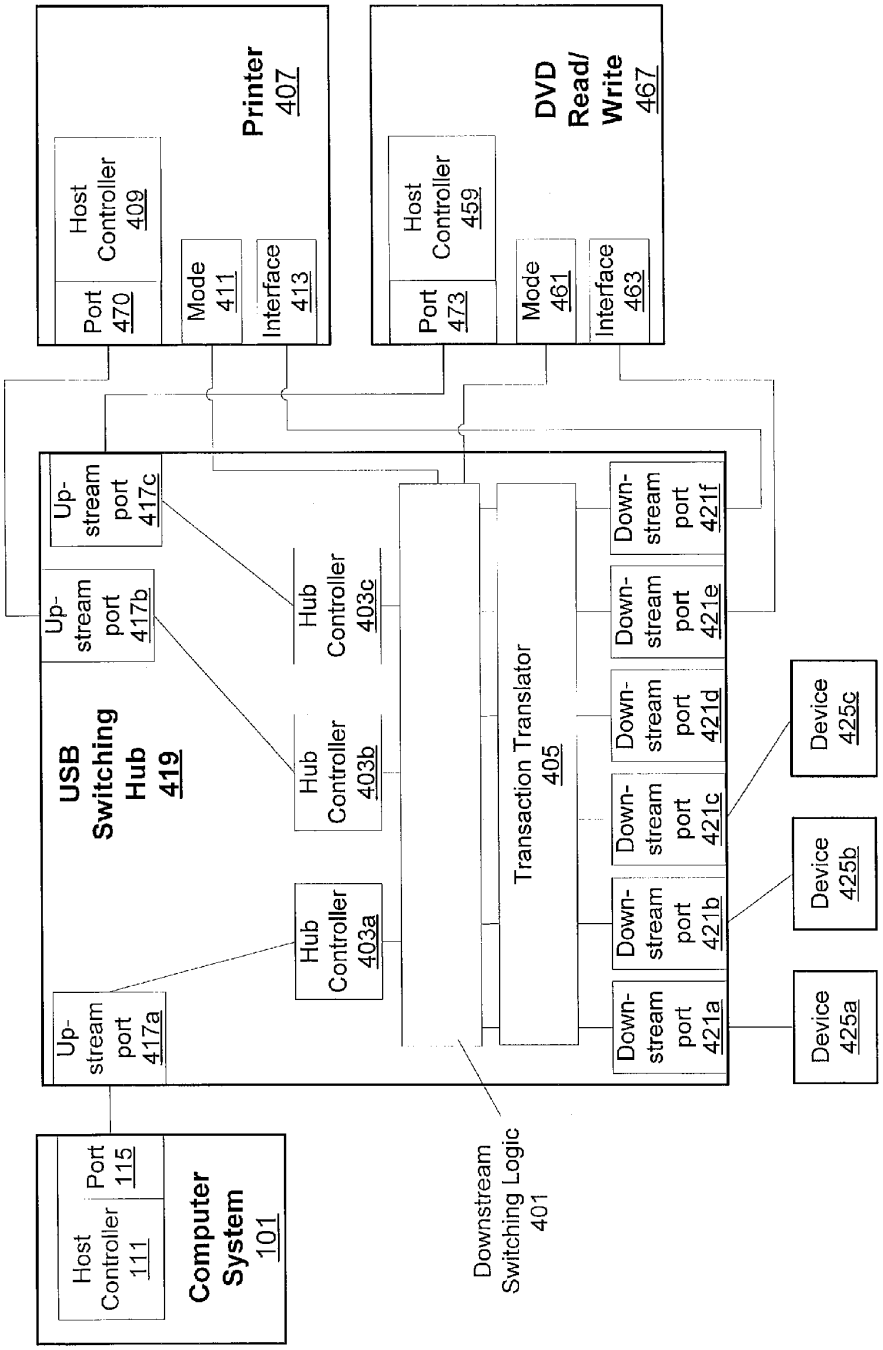
Printer
407
Host Controller
409
Port
470
Mode
411
Interface
413
DVD Read/ Write
467
Host Controller
459
Port
473
Mode
461
Interface
463
USB Switching Hub
419
Up-stream port
417a
Up-stream port
417b
Up-stream port
417c
Hub Controller
403a
Hub Controller
403b
Hub Controller
403c
Transaction Translator
405
Down-stream port
421a
Down-stream port
421b
Down-stream port
421c
Down-stream port
421d
Down-stream port
421e
Down-stream port
421f
Device
425a
Device
425b
Device
425c
Computer System
101
Host Controller
111
Port
115
Downstream Switching Logic
401

FIG. 5c

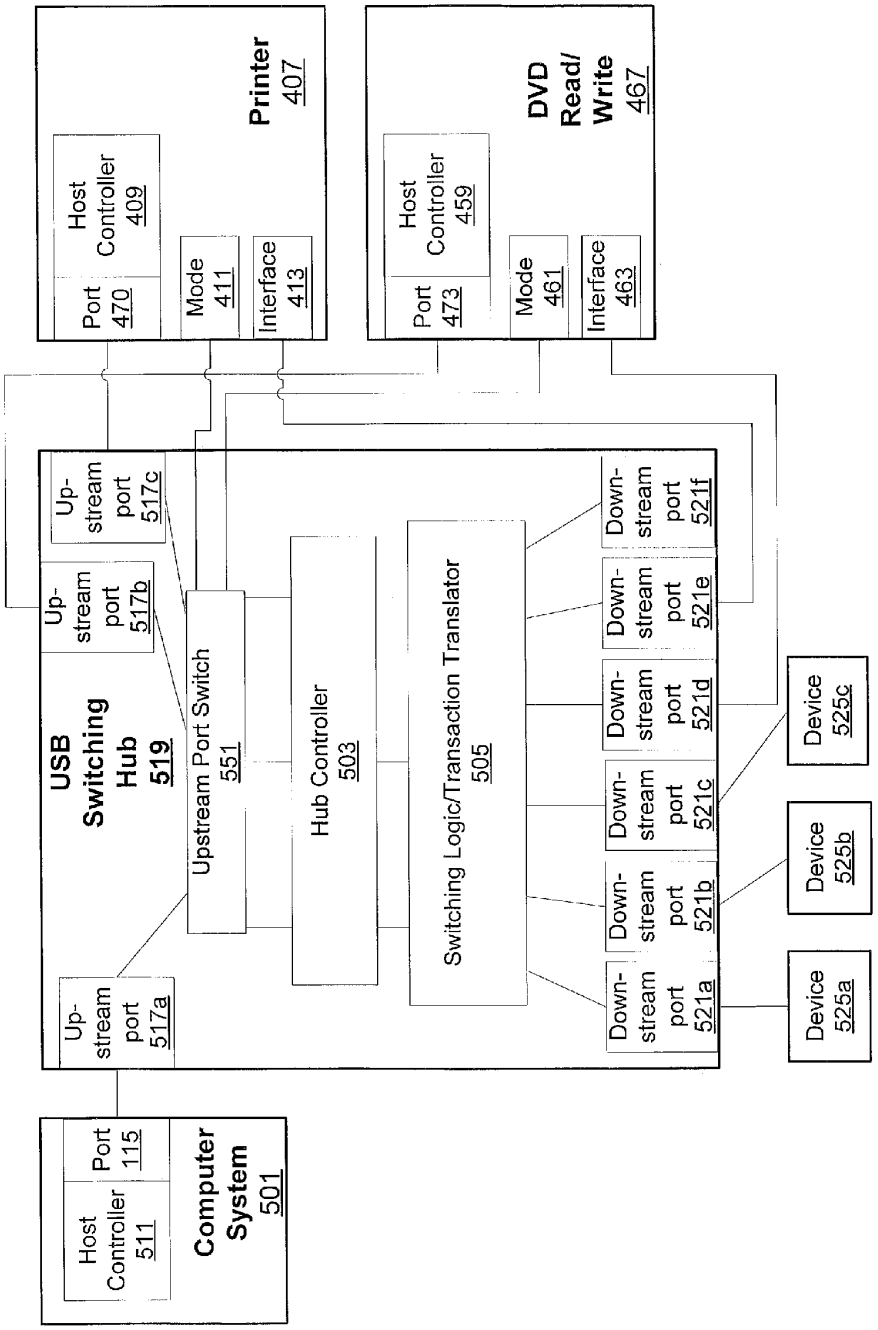
Printer
407
Host
Controller
409
Port
470
Mode
411
Interface
413
DVD
Read/
Write
467
Host
Controller
459
Port
473
Mode
461
Interface
463
USB
Switching
Hub
519
Up-
stream
port
517a
Up-
stream
port
517b
Up-
stream
port
517c
Upstream Port Switch
551
Hub Controller
503
Switching Logic/Transaction Translator
505
Down-
stream
port
521a
Down-
stream
port
521b
Down-
stream
port
521c
Down-
stream
port
521d
Down-
stream
port
521e
Down-
stream
port
521f
Device
525a
Device
525b
Device
525c
Computer
System
501
Host
Controller
511
Port
115

FIG. 6

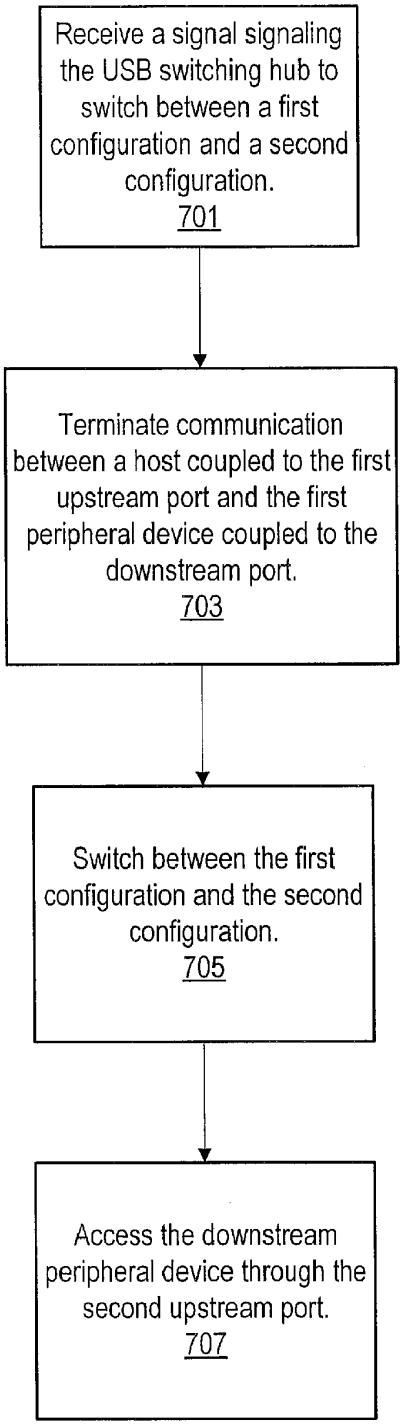
Receive a signal signaling the USB switching hub to switch between a first configuration and a second configuration.
701
Terminate communication between a host coupled to the first upstream port and the first peripheral device coupled to the downstream port.
703
Switch between the first configuration and the second configuration.
705
Access the downstream peripheral device through the second upstream port.
707

FIG. 7

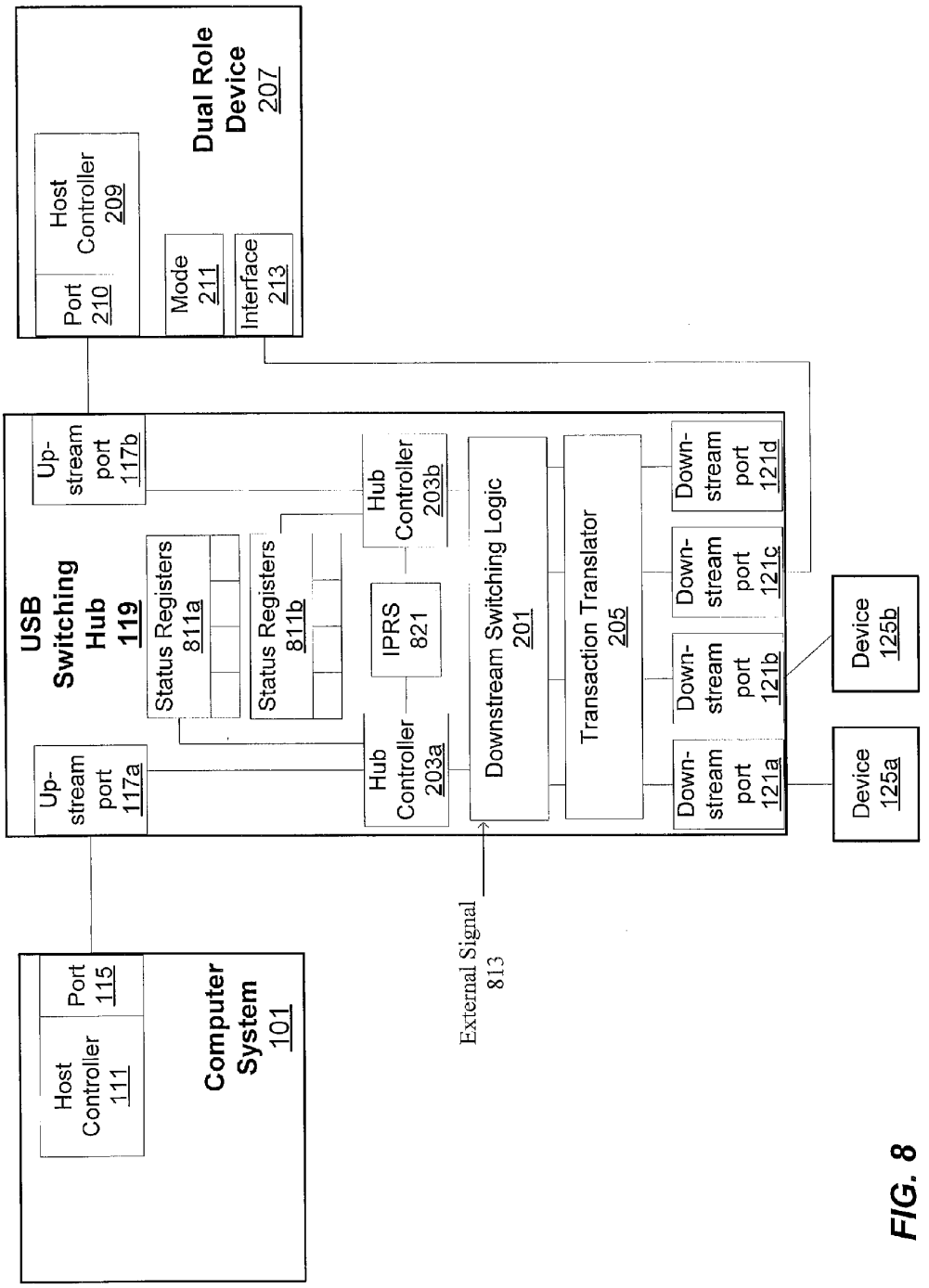
Dual Role Device 207
Host Controller 209
Port 210
Mode 211
Interface 213
USB Switching Hub 119
Up-stream port 117b
Up-stream port 117a
Status Registers 811a
Status Registers 811b
Hub Controller 203b
Hub Controller 203a
IPRS 821
Downstream Switching Logic 201
Transaction Translator 205
Down-stream port 121d
Down-stream port 121c
Down-stream port 121b
Down-stream port 121a
Device 125b
Device 125a
External Signal 813
Computer System 101
Host Controller 111
Port 115

FIG. 8

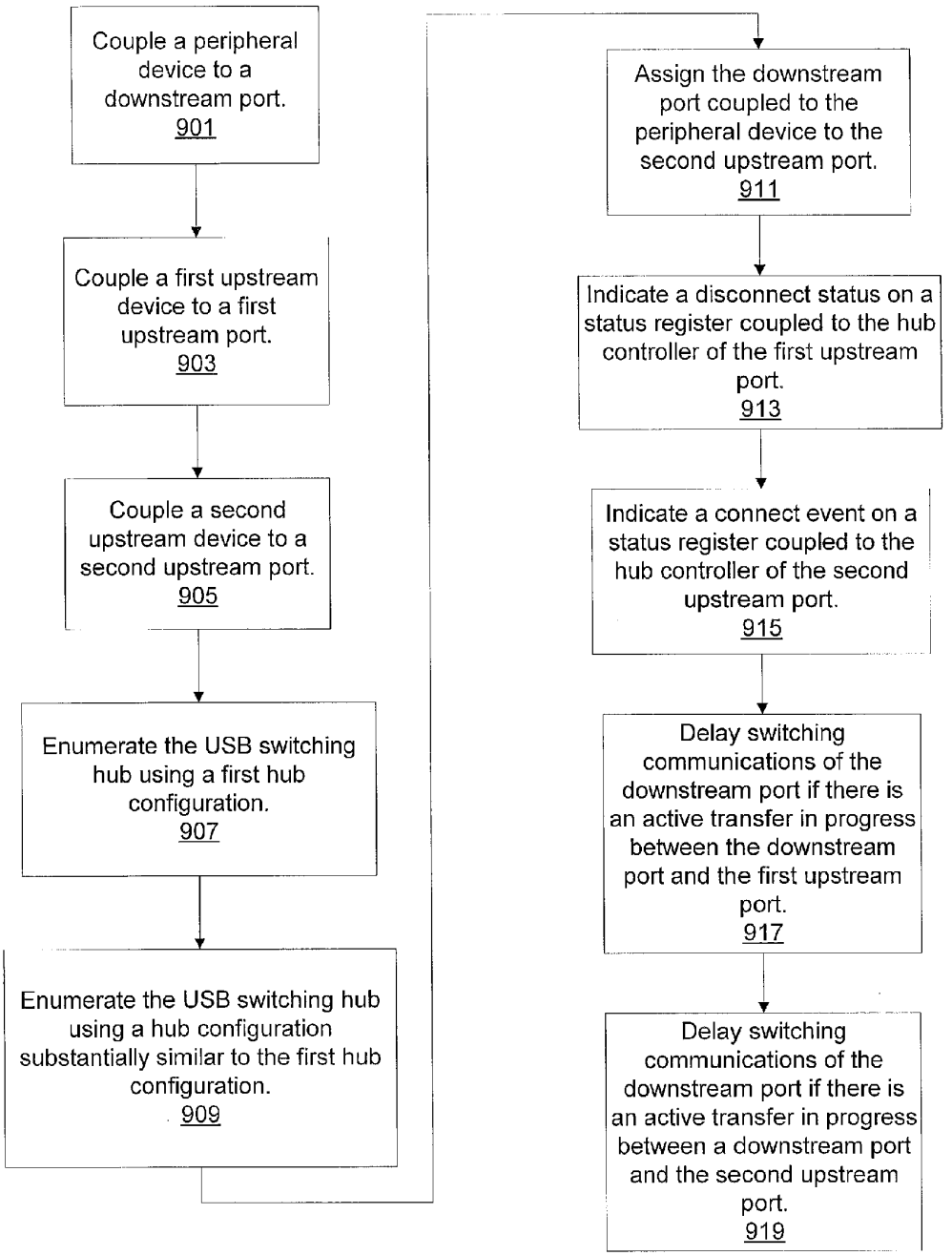
Couple a peripheral device to a downstream port. 901
Couple a first upstream device to a first upstream port. 903
Couple a second upstream device to a second upstream port. 905
Enumerate the USB switching hub using a first hub configuration. 907
Enumerate the USB switching hub using a hub configuration substantially similar to the first hub configuration. 909
Assign the downstream port coupled to the peripheral device to the second upstream port. 911
Indicate a disconnect status on a status register coupled to the hub controller of the first upstream port. 913
Indicate a connect event on a status register coupled to the hub controller of the second upstream port. 915
Delay switching communications of the downstream port if there is an active transfer in progress between the downstream port and the first upstream port. 917
Delay switching communications of the downstream port if there is an active transfer in progress between a downstream port and the second upstream port. 919

FIG. 9

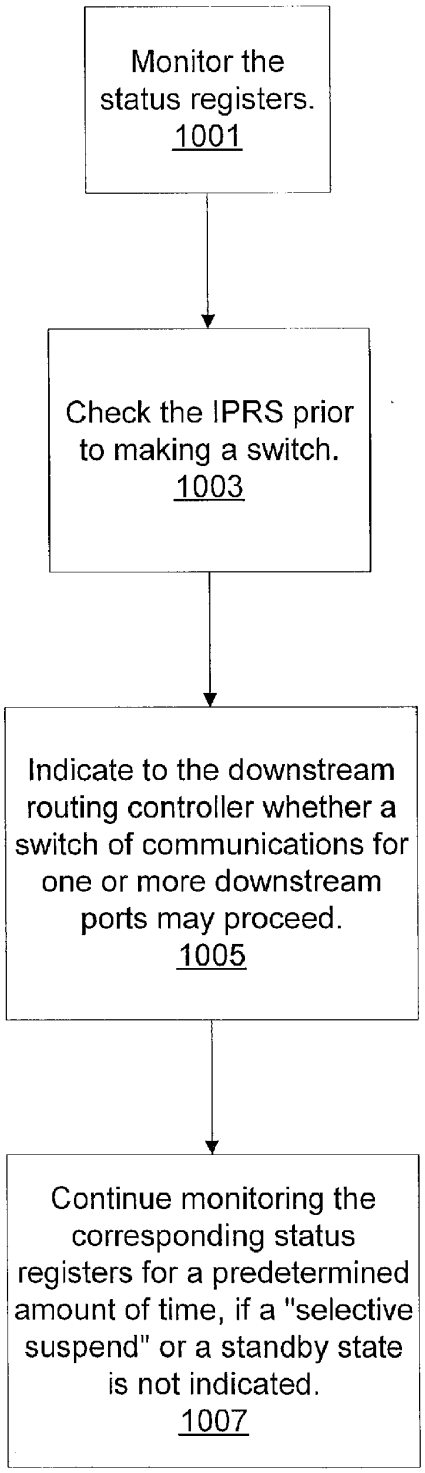
Monitor the status registers.
1001
Check the IPRS prior to making a switch.
1003
Indicate to the downstream routing controller whether a switch of communications for one or more downstream ports may proceed.
1005
Continue monitoring the corresponding status registers for a predetermined amount of time, if a "selective suspend" or a standby state is not indicated.
1007

FIG. 10

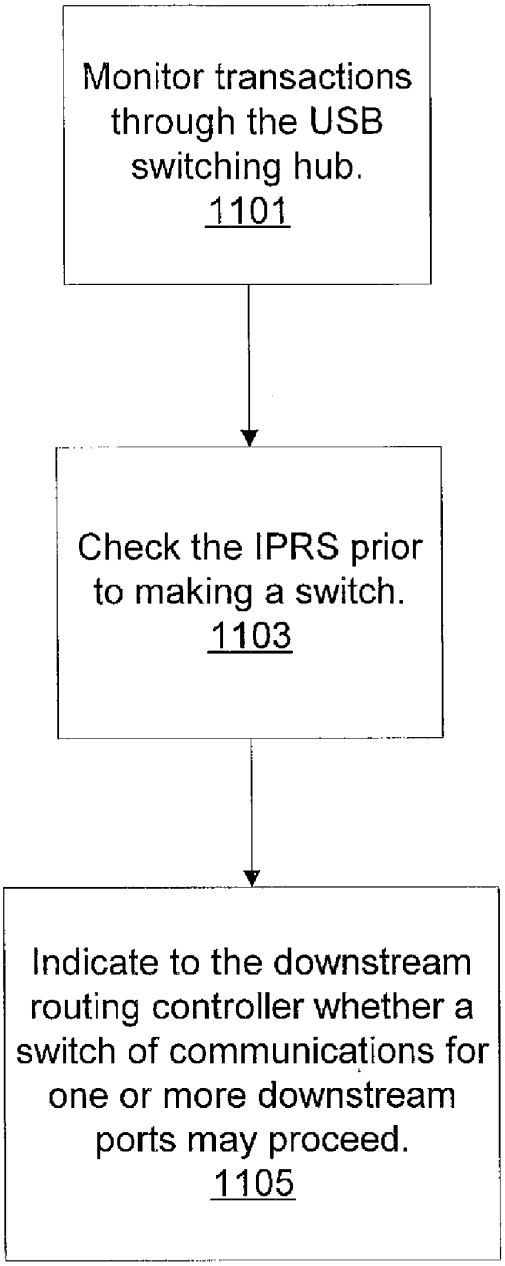
Monitor transactions through the USB switching hub.
1101
Check the IPRS prior to making a switch.
1103
Indicate to the downstream routing controller whether a switch of communications for one or more downstream ports may proceed.
1105

FIG. 11

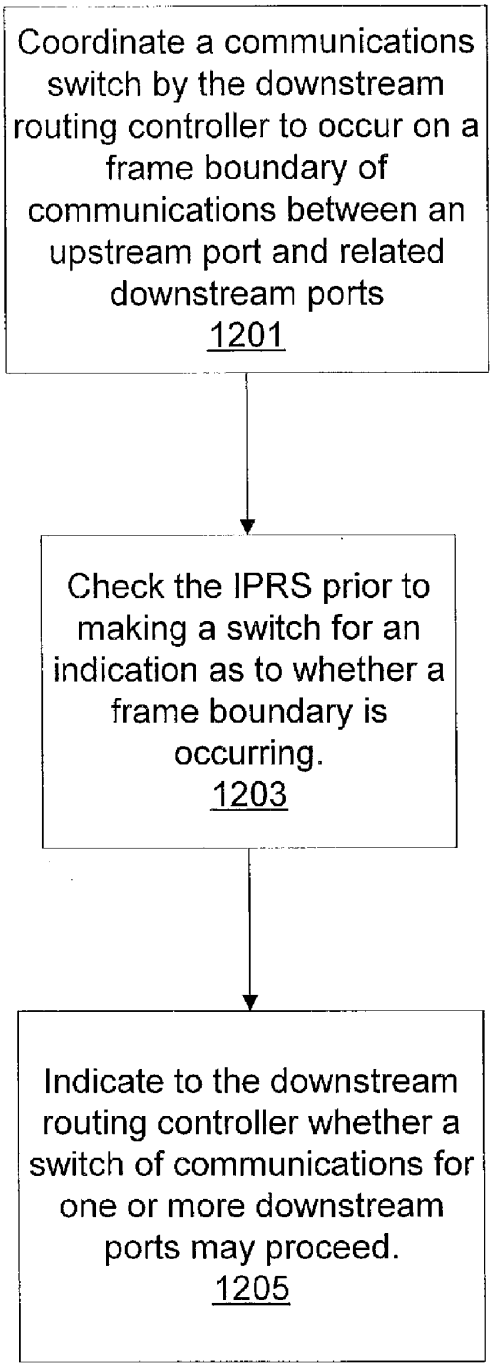
Coordinate a communications switch by the downstream routing controller to occur on a frame boundary of communications between an upstream port and related downstream ports
1201
Check the IPRS prior to making a switch for an indication as to whether a frame boundary is occurring.
1203
Indicate to the downstream routing controller whether a switch of communications for one or more downstream ports may proceed.
1205

FIG. 12

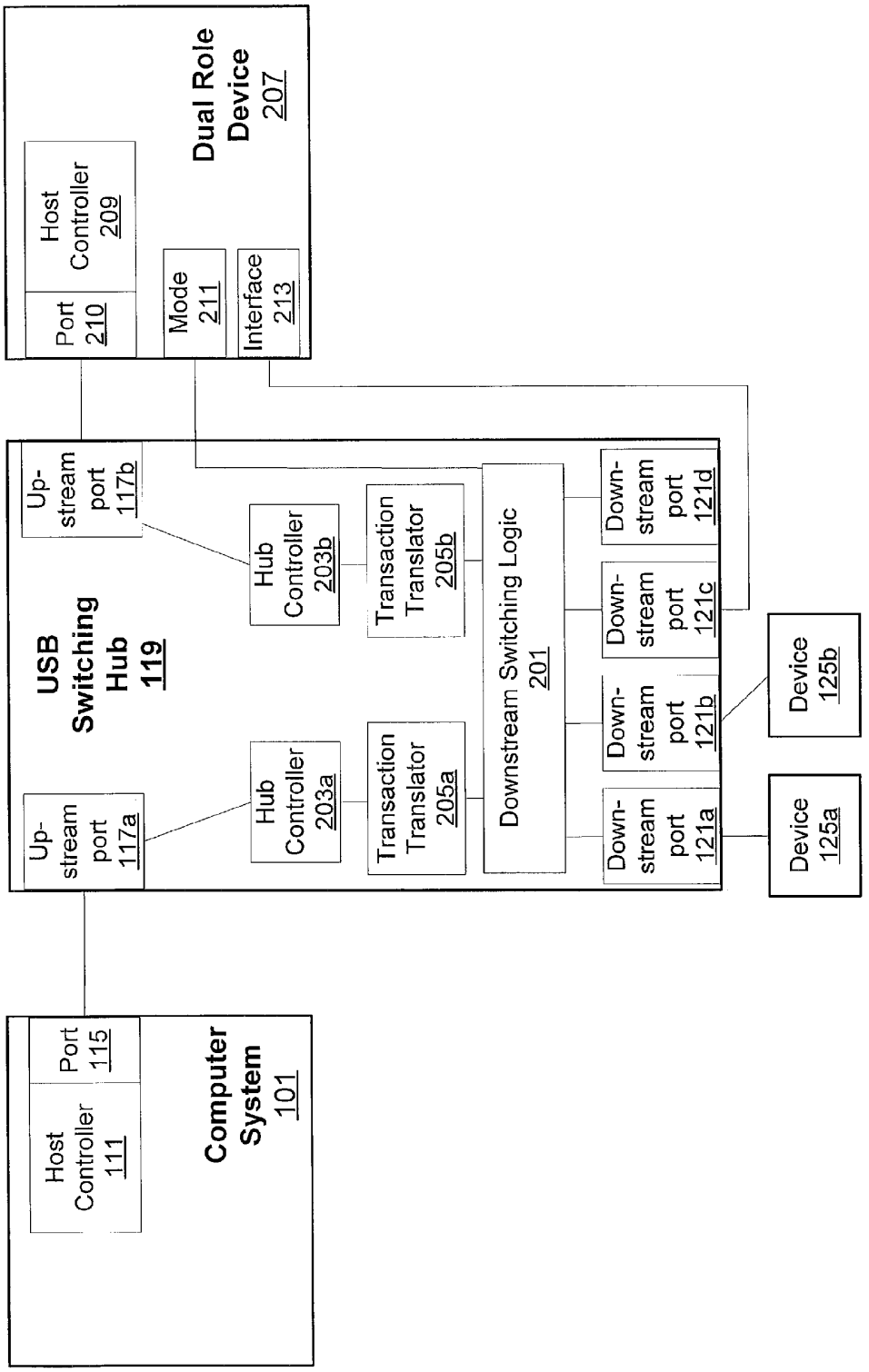
Dual Role Device 207
Host Controller 209
Port 210
Mode 211
Interface 213
USB Switching Hub 119
Up-stream port 117b
Up-stream port 117a
Hub Controller 203b
Hub Controller 203a
Transaction Translator 205b
Transaction Translator 205a
Downstream Switching Logic 201
Down-stream port 121d
Down-stream port 121c
Down-stream port 121b
Down-stream port 121a
Device 125b
Device 125a
Computer System 101
Host Controller 111
Port 115

FIG. 13

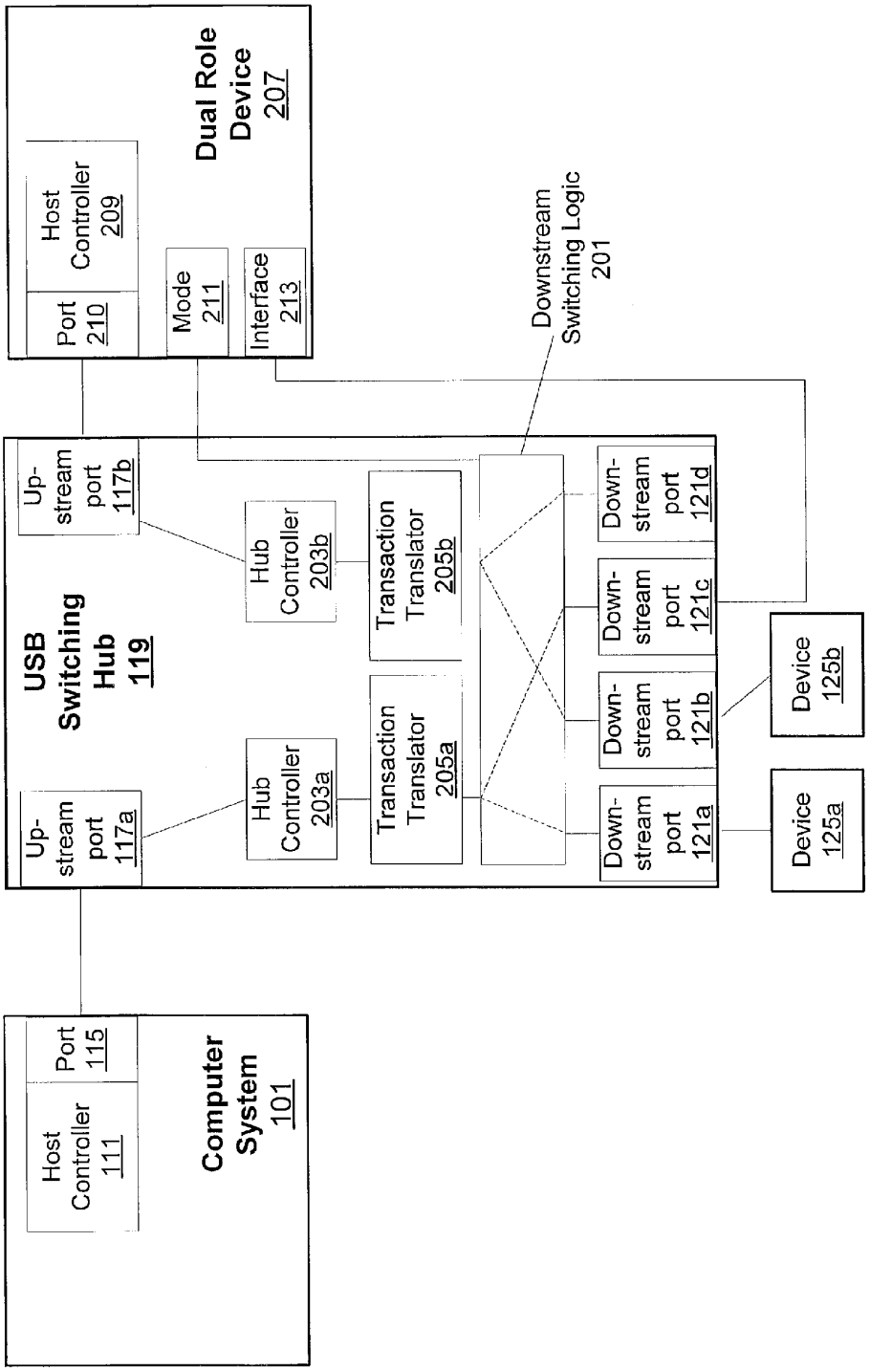
Dual Role Device 207
Host Controller 209
Port 210
Mode 211
Interface 213
Downstream Switching Logic 201
USB Switching Hub 119
Up-stream port 117b
Up-stream port 117a
Hub Controller 203b
Hub Controller 203a
Transaction Translator 205b
Transaction Translator 205a
Down-stream port 121d
Down-stream port 121c
Down-stream port 121b
Down-stream port 121a
Device 125b
Device 125a
Host Controller 111
Port 115
Computer System 101

FIG. 14a

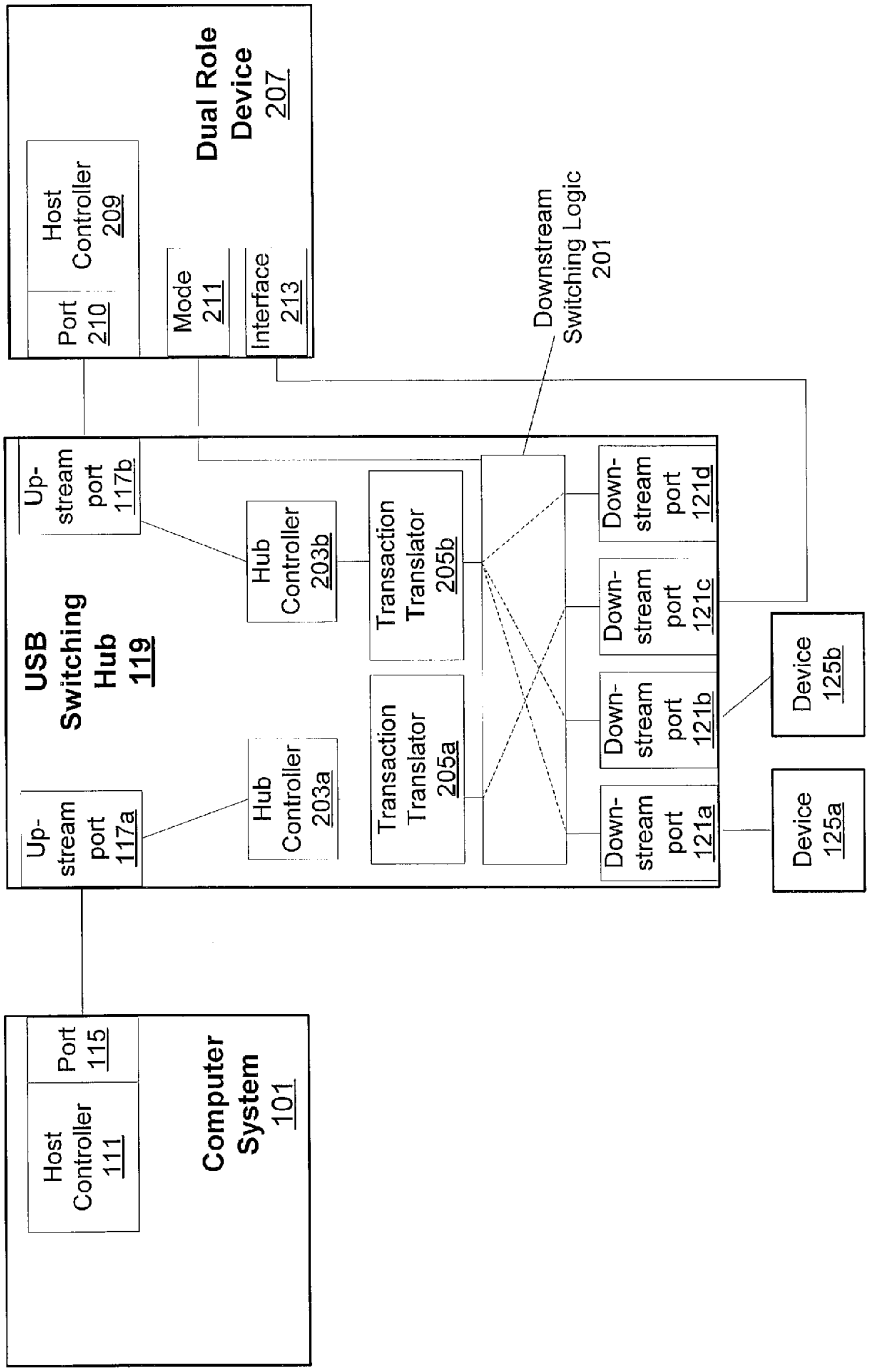
Dual Role Device 207
Host Controller 209
Port 210
Mode 211
Interface 213
Downstream Switching Logic 201
USB Switching Hub 119
Up-stream port 117b
Up-stream port 117a
Hub Controller 203b
Hub Controller 203a
Transaction Translator 205b
Transaction Translator 205a
Down-stream port 121d
Down-stream port 121c
Down-stream port 121b
Down-stream port 121a
Device 125b
Device 125a
Computer System 101
Host Controller 111
Port 115

FIG. 14b

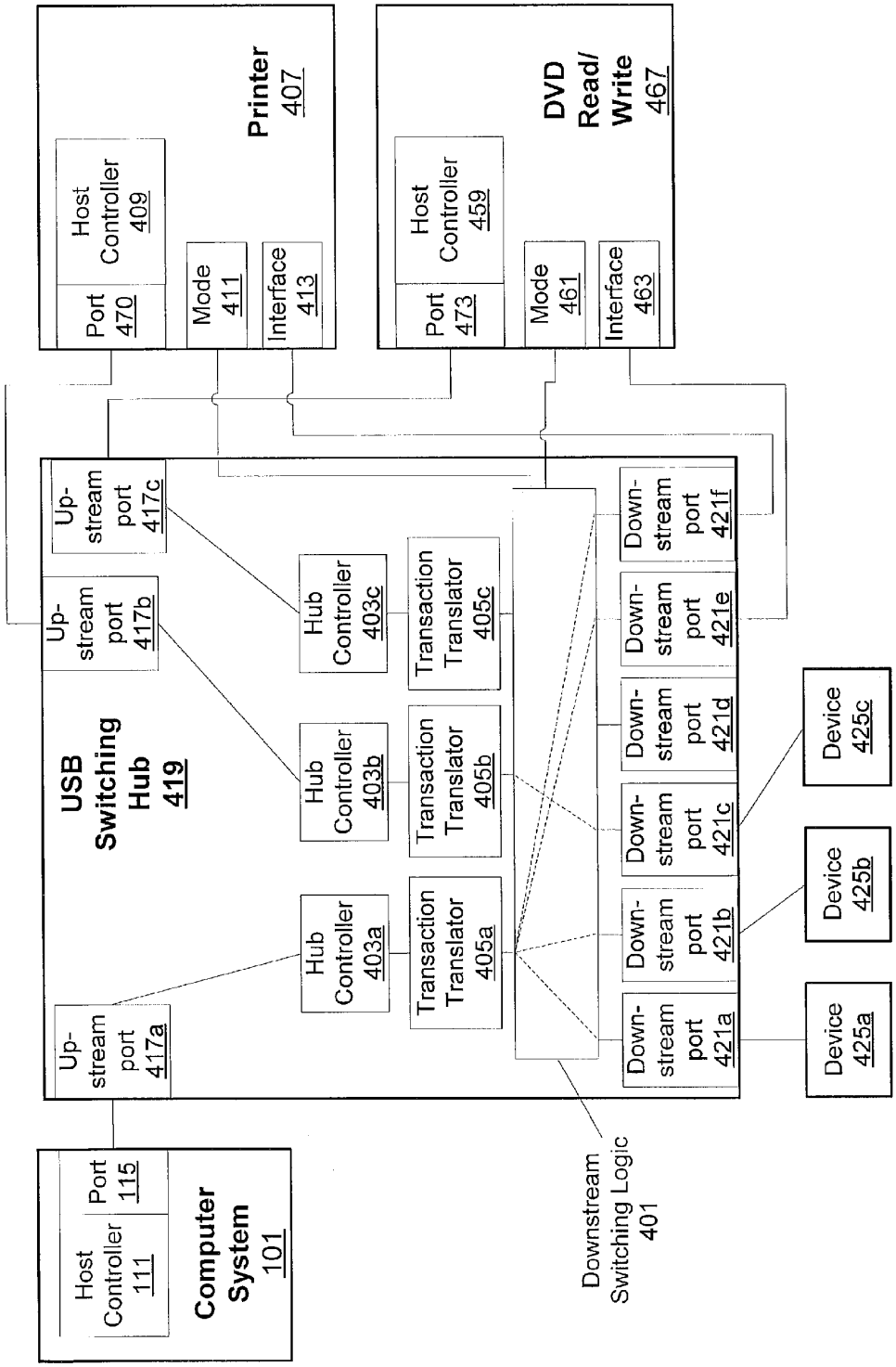
Printer 407
Host Controller 409
Port 470
Mode 411
Interface 413
DVD Read/ Write 467
Host Controller 459
Port 473
Mode 461
Interface 463
USB Switching Hub 419
Up-stream port 417a
Up-stream port 417b
Up-stream port 417c
Hub Controller 403a
Hub Controller 403b
Hub Controller 403c
Transaction Translator 405a
Transaction Translator 405b
Transaction Translator 405c
Down-stream port 421a
Down-stream port 421b
Down-stream port 421c
Down-stream port 421d
Down-stream port 421e
Down-stream port 421f
Device 425a
Device 425b
Device 425c
Computer System 101
Host Controller 111
Port 115
Downstream Switching Logic 401

FIG. 15a

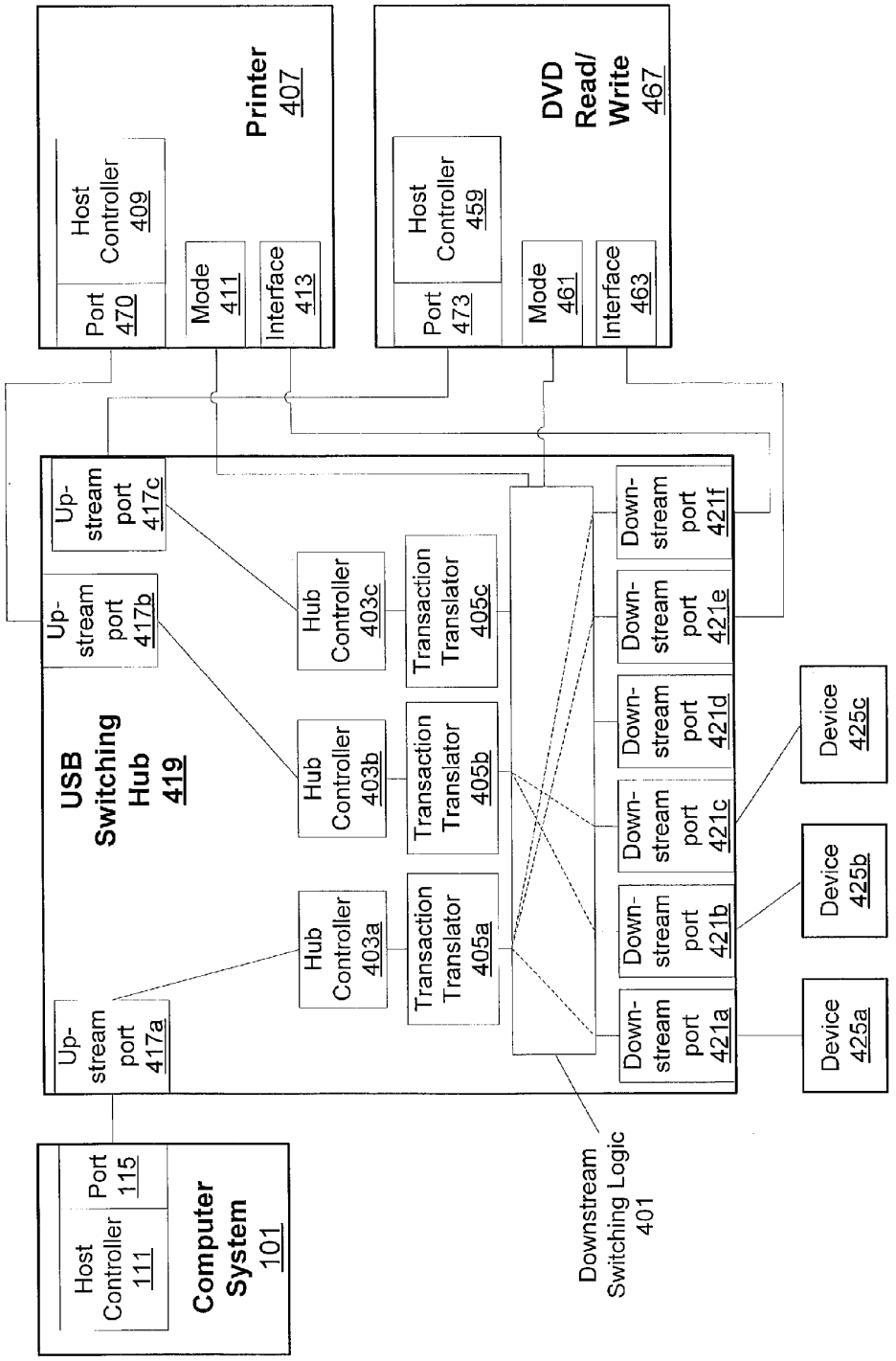
Printer 407
Host Controller 409
Port 470
Mode 411
Interface 413
DVD Read/ Write 467
Host Controller 459
Port 473
Mode 461
Interface 463
USB Switching Hub 419
Up-stream port 417a
Up-stream port 417b
Up-stream port 417c
Hub Controller 403a
Hub Controller 403b
Hub Controller 403c
Transaction Translator 405a
Transaction Translator 405b
Transaction Translator 405c
Down-stream port 421a
Down-stream port 421b
Down-stream port 421c
Down-stream port 421d
Down-stream port 421e
Down-stream port 421f
Device 425a
Device 425b
Device 425c
Computer System 101
Host Controller 111
Port 115
Downstream Switching Logic 401

FIG. 15b

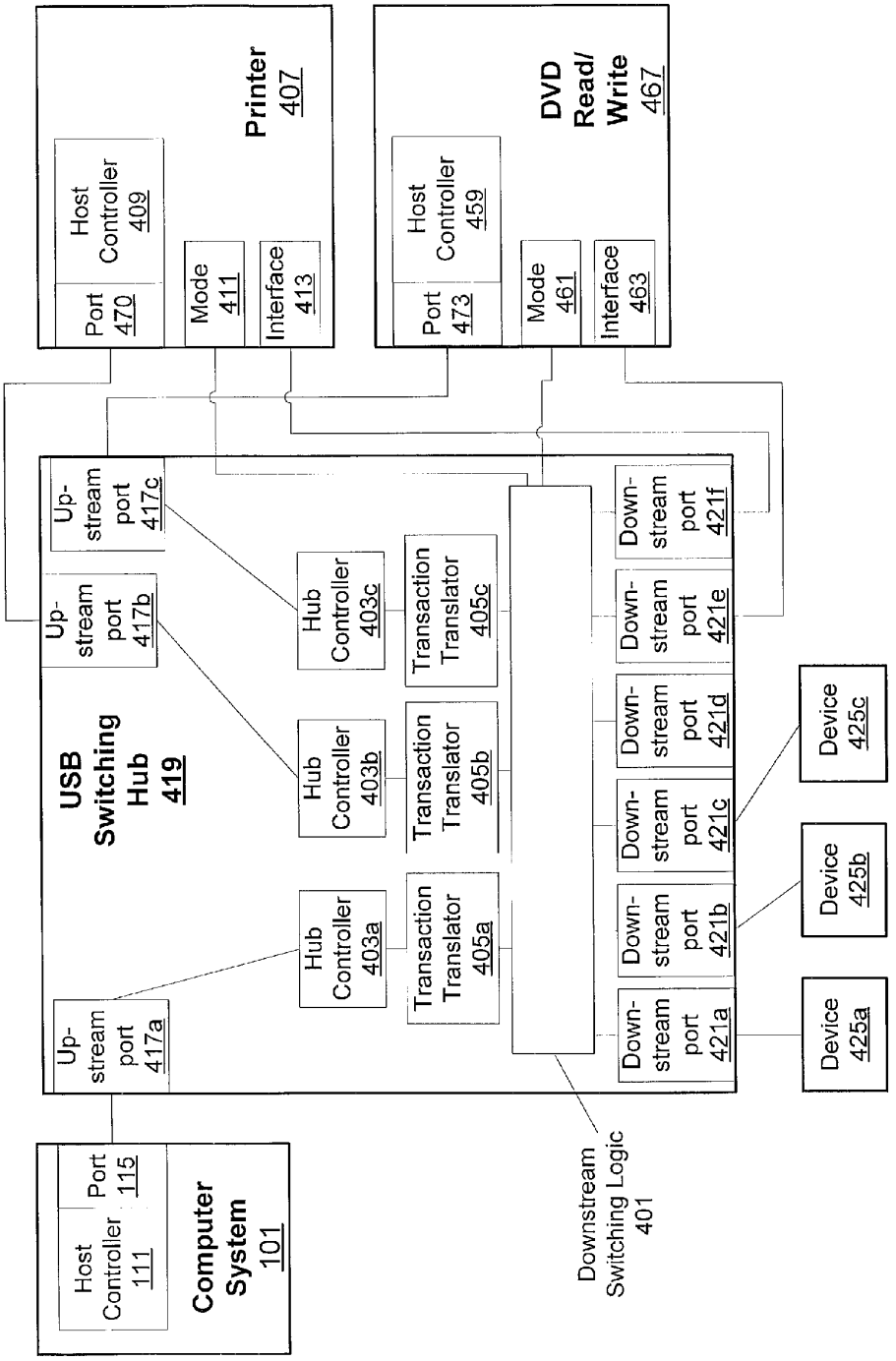
Printer
407
Host
Controller
409
Port
470
Mode
411
Interface
413
DVD
Read/
Write
467
Host
Controller
459
Port
473
Mode
461
Interface
463
USB
Switching
Hub
419
Up-
stream
port
417a
Up-
stream
port
417b
Up-
stream
port
417c
Hub
Controller
403a
Hub
Controller
403b
Hub
Controller
403c
Transaction
Translator
405a
Transaction
Translator
405b
Transaction
Translator
405c
Down-
stream
port
421a
Down-
stream
port
421b
Down-
stream
port
421c
Down-
stream
port
421d
Down-
stream
port
421e
Down-
stream
port
421f
Device
425a
Device
425b
Device
425c
Host
Controller
111
Port
115
Computer
System
101
Downstream
Switching Logic
401

FIG. 15c

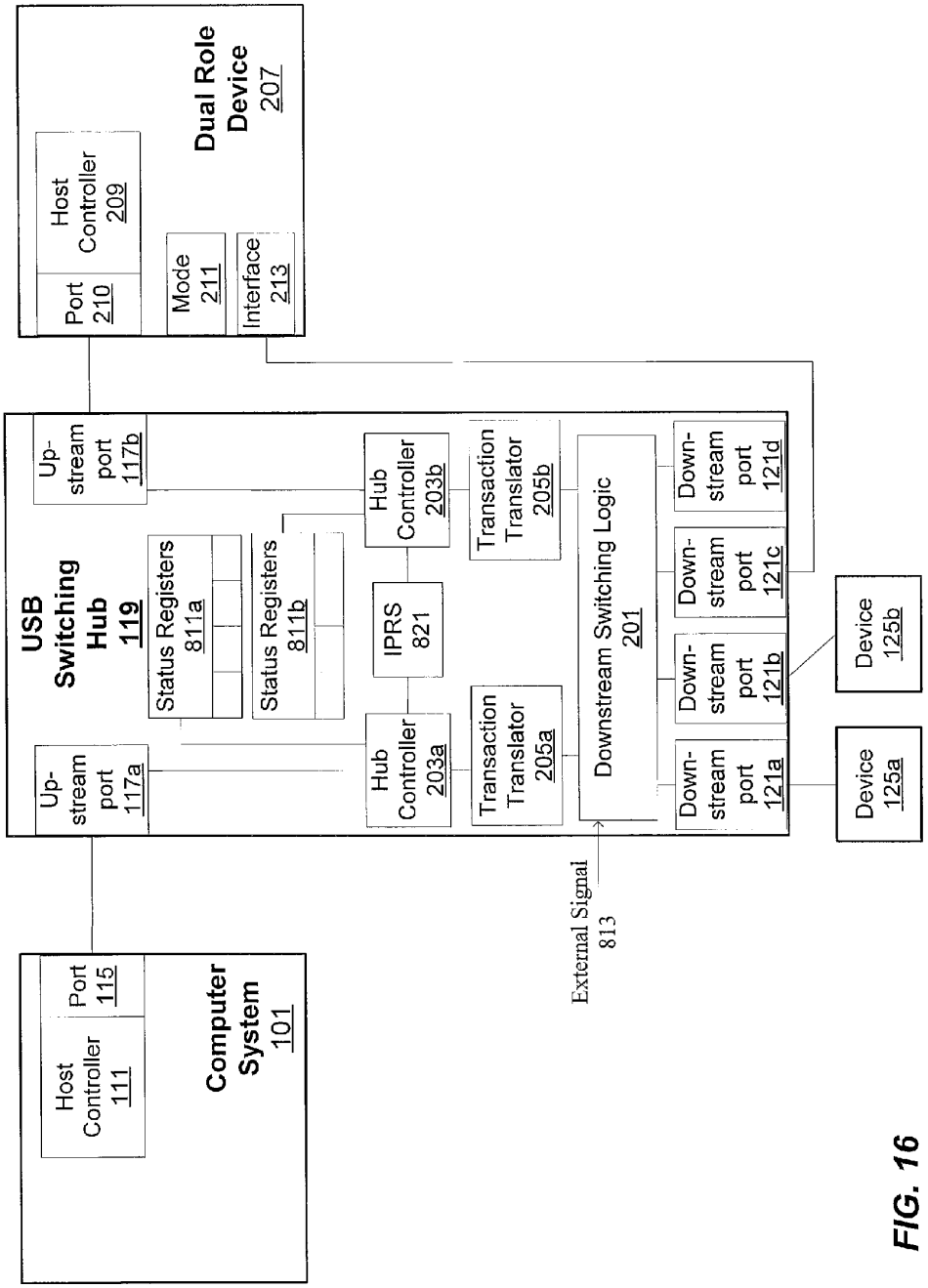
Dual Role Device 207
Host Controller 209
Port 210
Mode 211
Interface 213
USB Switching Hub 119
Up-stream port 117b
Up-stream port 117a
Status Registers 811a
Status Registers 811b
Hub Controller 203b
Hub Controller 203a
IPRS 821
Transaction Translator 205b
Transaction Translator 205a
Downstream Switching Logic 201
Down-stream port 121d
Down-stream port 121c
Down-stream port 121b
Down-stream port 121a
Device 125b
Device 125a
External Signal 813
Computer System 101
Host Controller 111
Port 115

FIG. 16

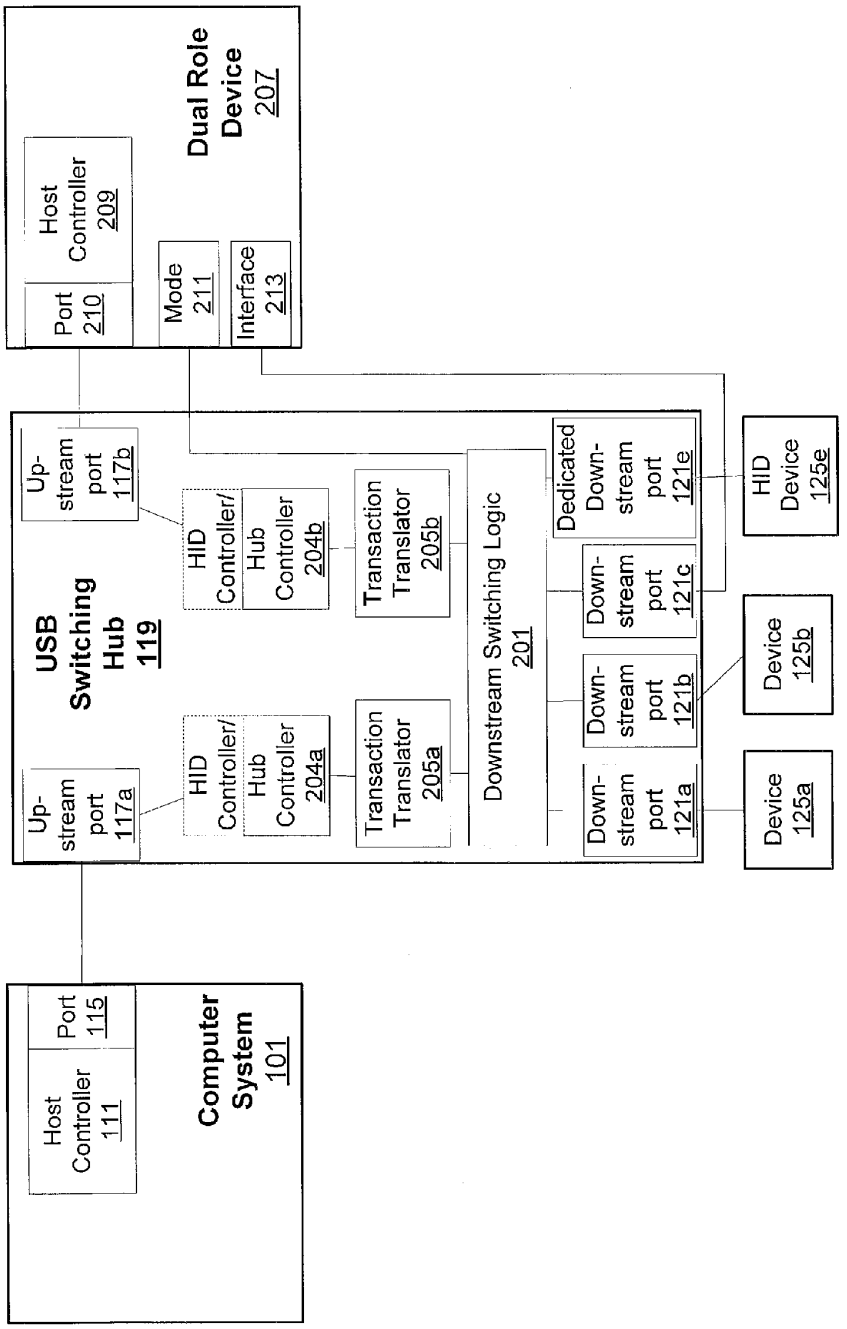
Computer System 101
Host Controller 111
Port 115
USB Switching Hub 119
Up-stream port 117a
Up-stream port 117b
HID Controller/ Hub Controller 204a
HID Controller/ Hub Controller 204b
Transaction Translator 205a
Transaction Translator 205b
Downstream Switching Logic 201
Down-stream port 121a
Down-stream port 121b
Down-stream port 121c
Dedicated Down-stream port 121e
Device 125a
Device 125b
HID Device 125e
Dual Role Device 207
Host Controller 209
Port 210
Mode 211
Interface 213

FIG. 17

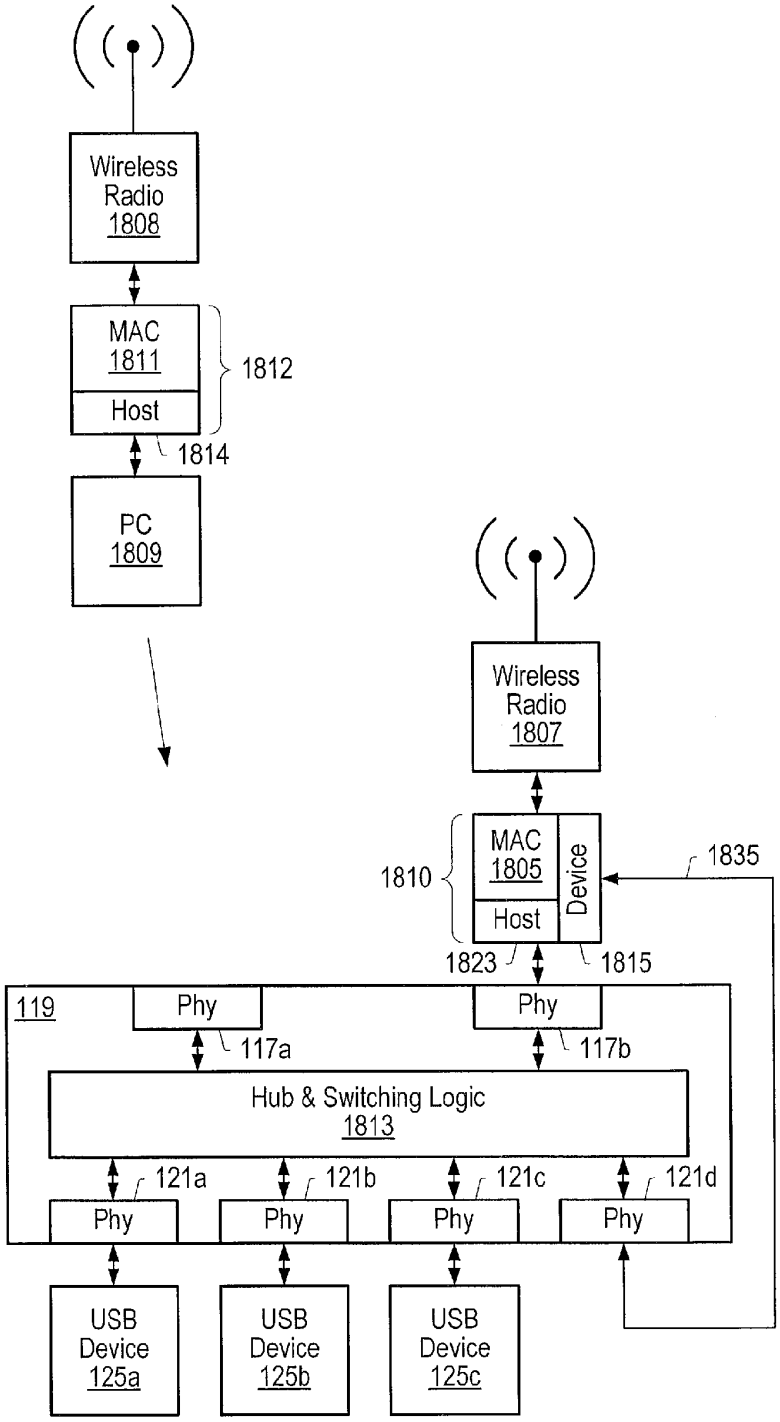
Wireless Radio 1808
MAC 1811
Host
1812
1814
PC 1809
Wireless Radio 1807
1810
MAC 1805
Host
Device
1835
1823
1815
119
Phy
Phy
117a
117b
Hub & Switching Logic 1813
121a
121b
121c
121d
Phy
Phy
Phy
Phy
USB Device 125a
USB Device 125b
USB Device 125c

FIG. 18a

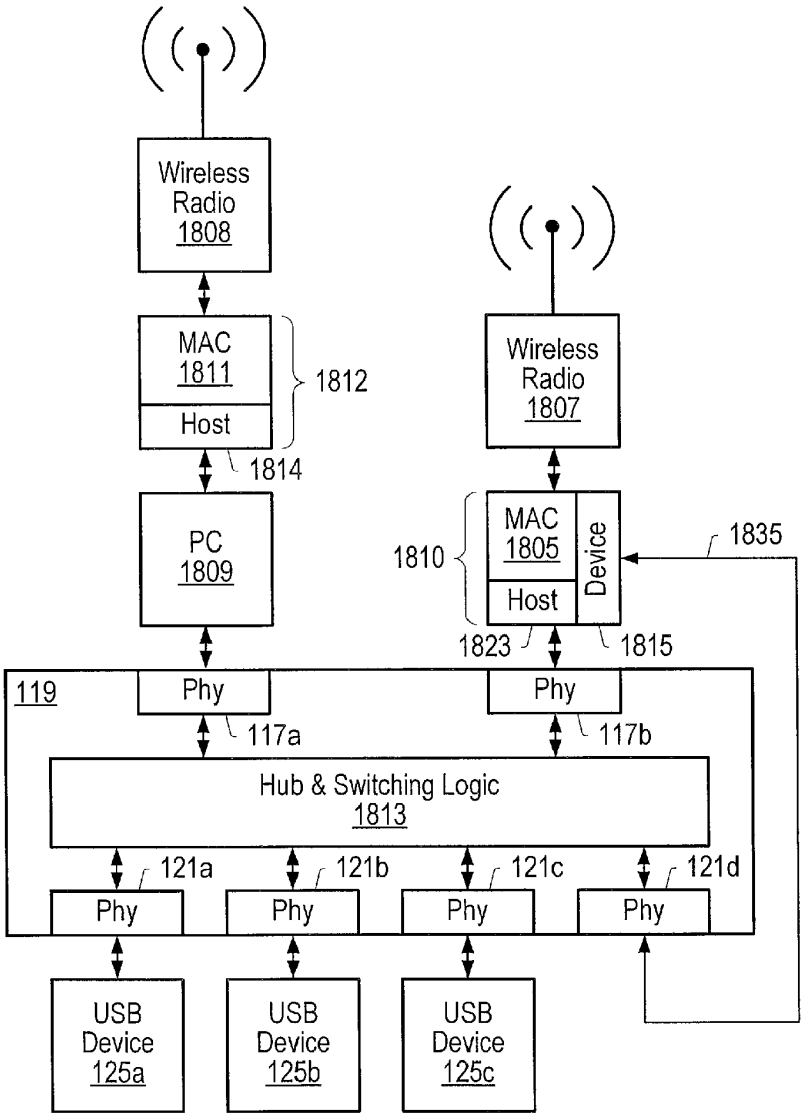
Wireless Radio 1808
MAC 1811
Host
1812
1814
PC 1809
Wireless Radio 1807
1810
MAC 1805
Host
Device
1835
1823
1815
119
Phy
117a
Phy
117b
Hub & Switching Logic 1813
121a
121b
121c
121d
Phy
Phy
Phy
Phy
USB Device 125a
USB Device 125b
USB Device 125c

FIG. 18b

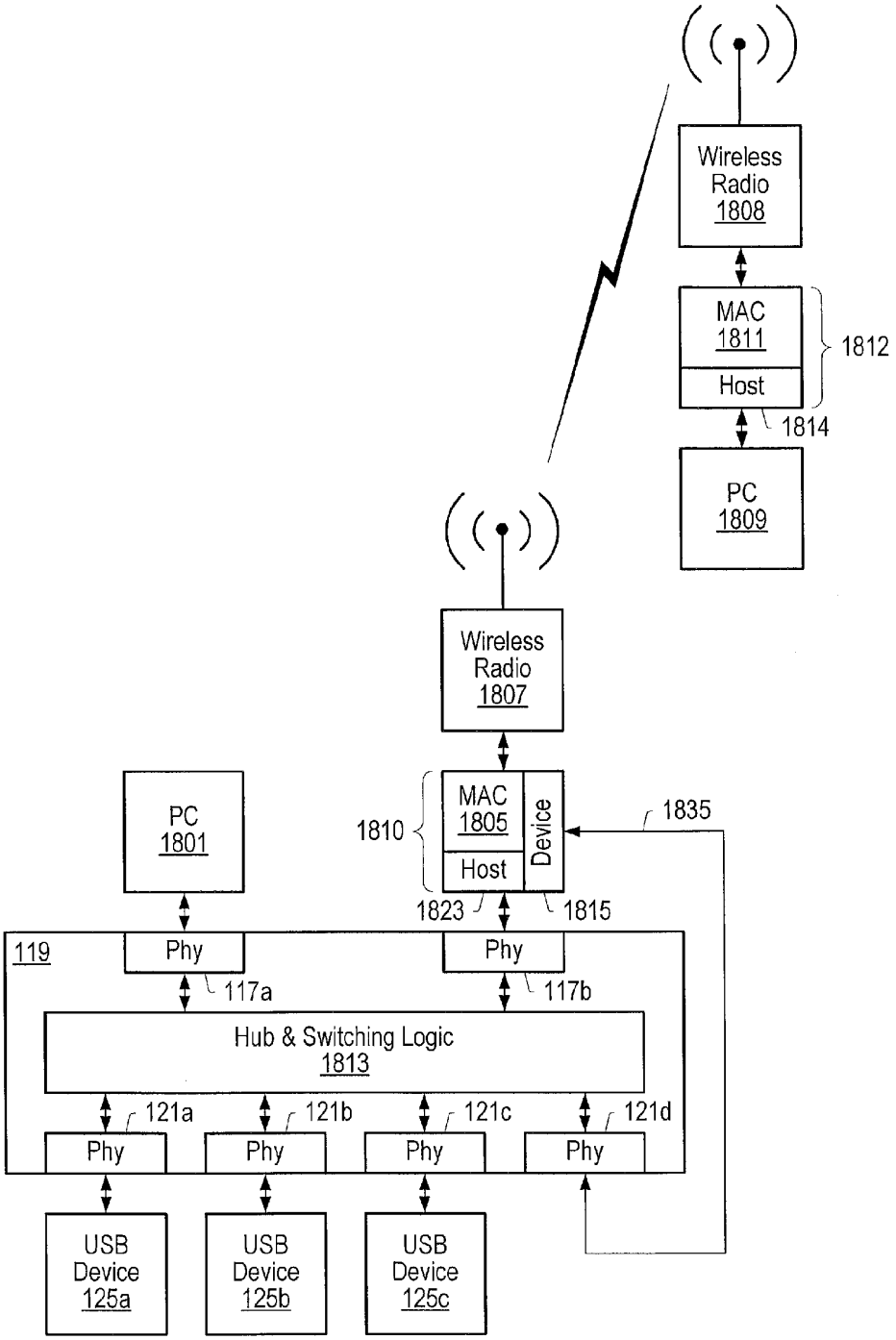
Wireless Radio 1808
MAC 1811
Host
1812
1814
PC 1809
Wireless Radio 1807
PC 1801
1810
MAC 1805
Host
Device
1835
1823
1815
119
Phy
Phy
117a
117b
Hub & Switching Logic 1813
121a
121b
121c
121d
Phy
Phy
Phy
Phy
USB Device 125a
USB Device 125b
USB Device 125c

FIG. 18c

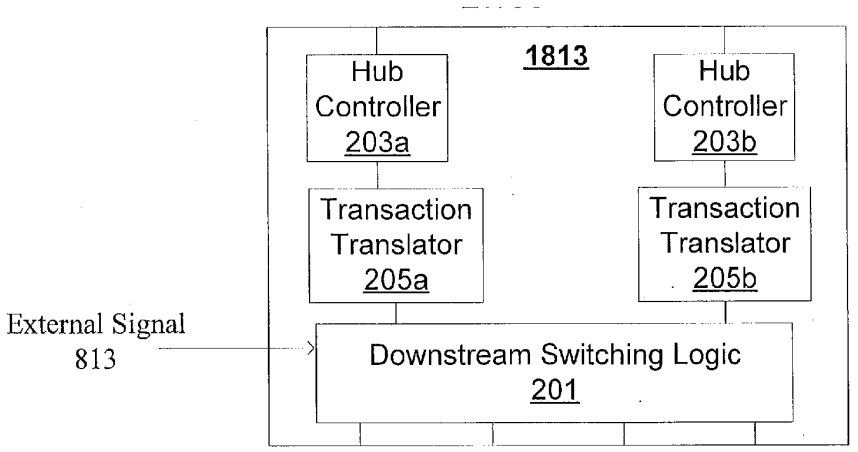

FIG. 18d

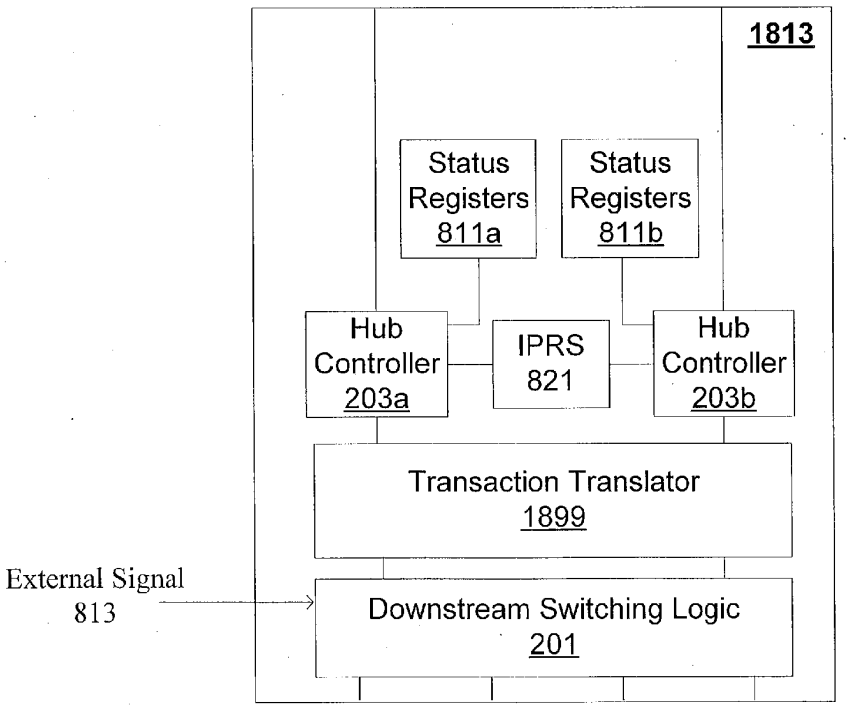

FIG. 18e

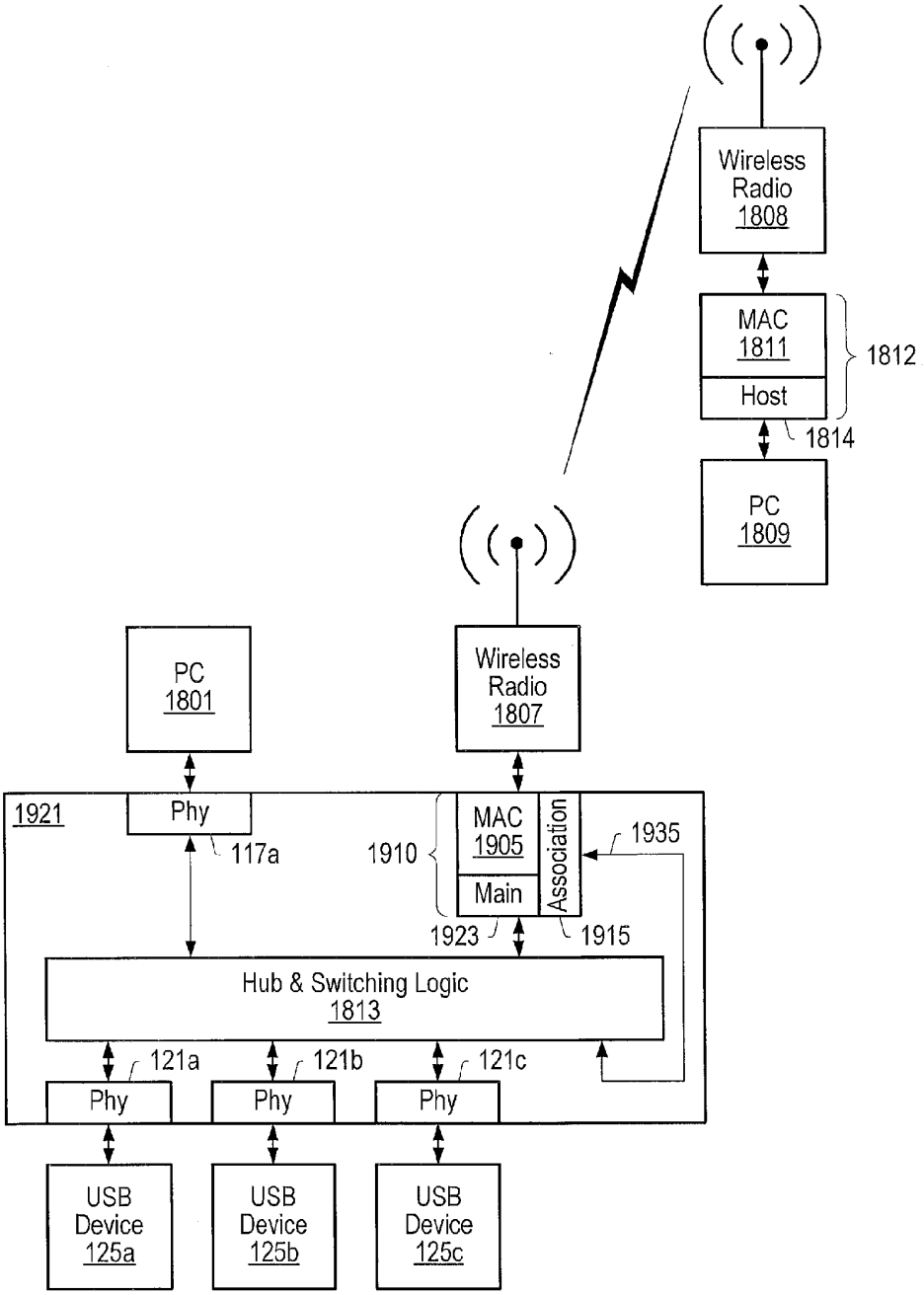
Wireless Radio 1808
MAC 1811
Host
1812
1814
PC 1809
PC 1801
Wireless Radio 1807
1921
Phy
117a
1910
MAC 1905
Main
Association
1935
1923
1915
Hub & Switching Logic 1813
121a
121b
121c
Phy
Phy
Phy
USB Device 125a
USB Device 125b
USB Device 125c

FIG. 19

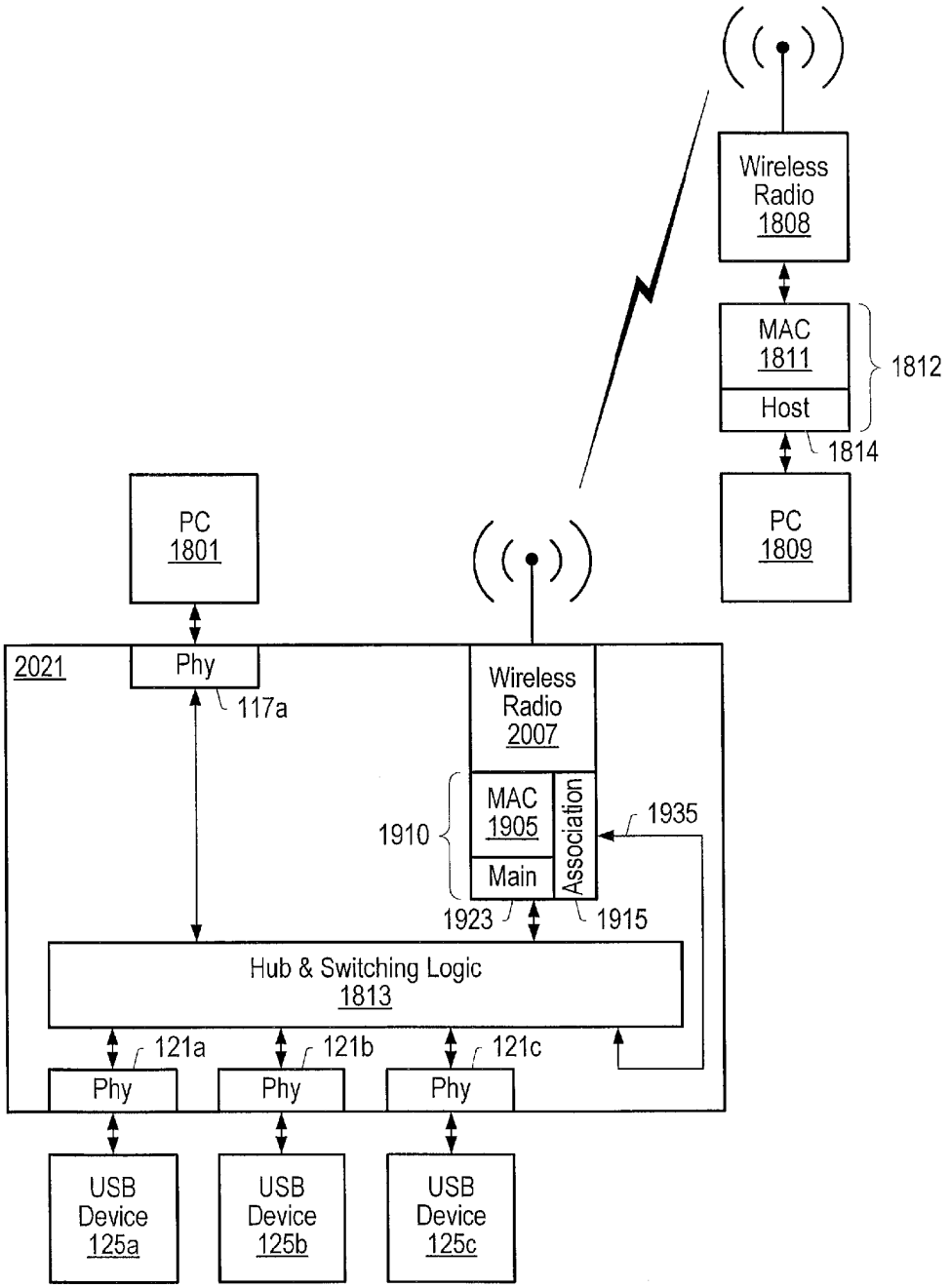
Wireless
Radio
1808
MAC
1811
Host
1812
1814
PC
1809
PC
1801
2021
Phy
117a
Wireless
Radio
2007
MAC
1905
Main
Association
1910
1935
1923
1915
Hub & Switching Logic
1813
121a
121b
121c
Phy
Phy
Phy
USB
Device
125a
USB
Device
125b
USB
Device
125c

FIG. 20

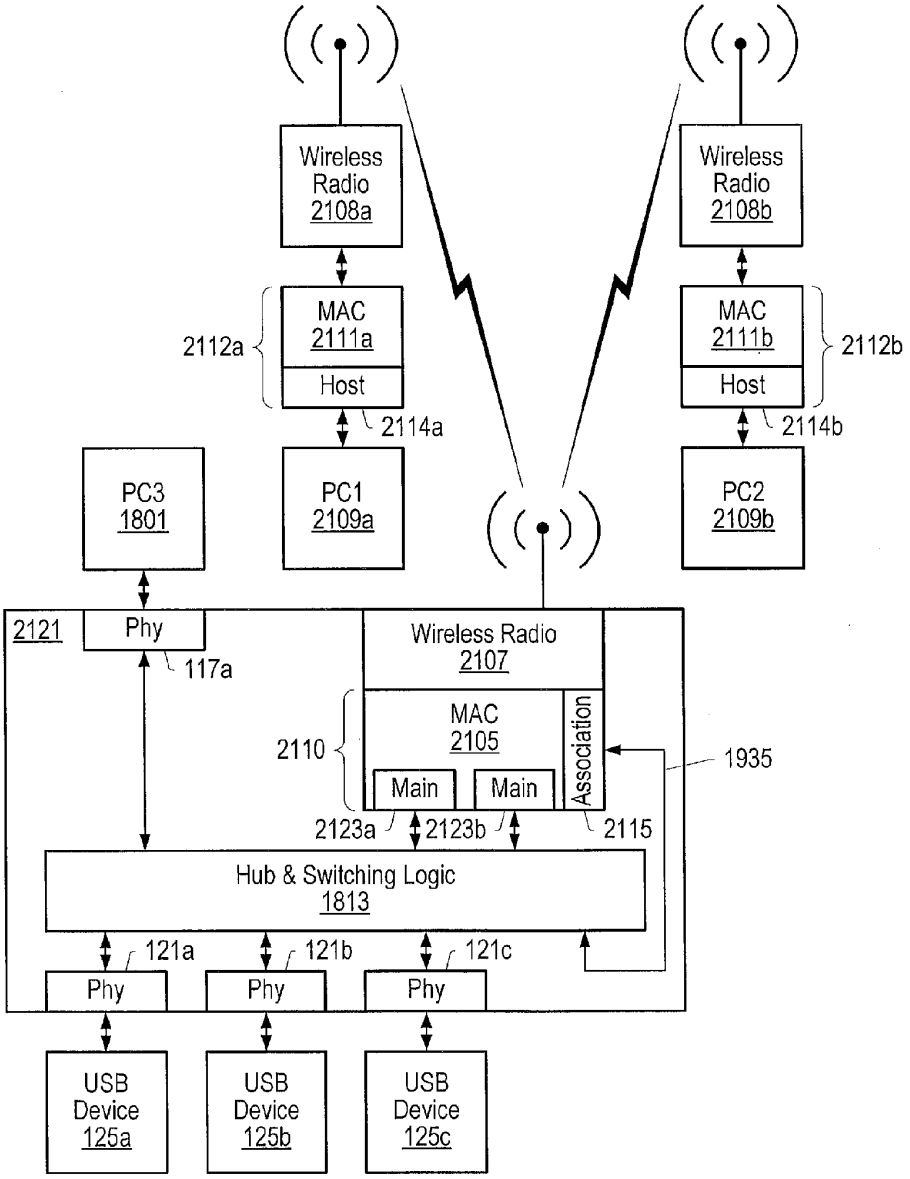
Wireless Radio 2108a
Wireless Radio 2108b
MAC 2111a
Host
MAC 2111b
Host
2112a
2112b
2114a
2114b
PC3 1801
PC1 2109a
PC2 2109b
2121
Phy
117a
Wireless Radio 2107
MAC 2105
Association
Main
Main
2110
1935
2123a
2123b
2115
Hub & Switching Logic 1813
121a
121b
121c
Phy
Phy
Phy
USB Device 125a
USB Device 125b
USB Device 125c

FIG. 21

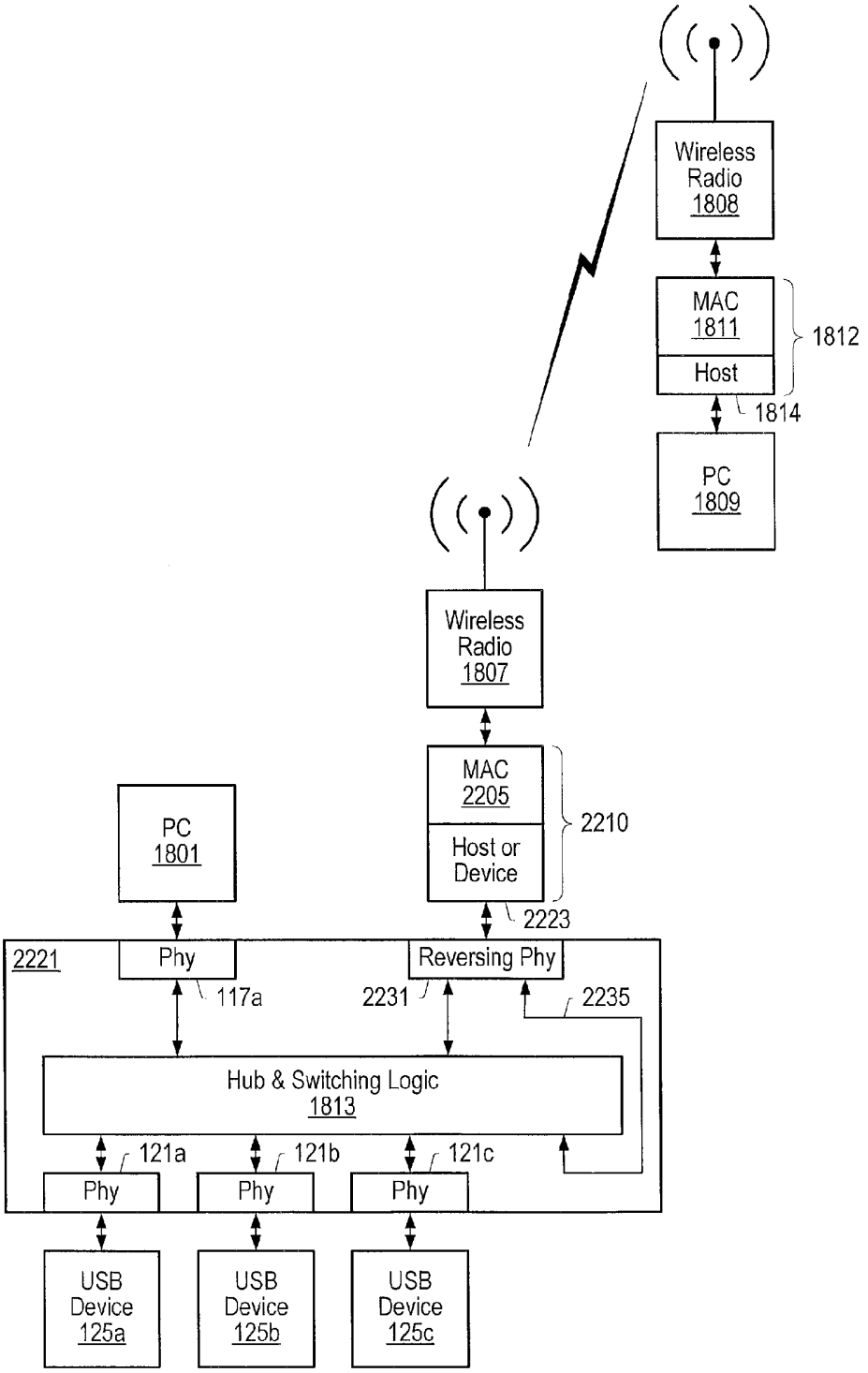
Wireless Radio 1808
MAC 1811
Host
1812
1814
PC 1809
Wireless Radio 1807
MAC 2205
Host or Device
2210
2223
PC 1801
2221
Phy
117a
Reversing Phy
2231
2235
Hub & Switching Logic 1813
121a
121b
121c
Phy
Phy
Phy
USB Device 125a
USB Device 125b
USB Device 125c

FIG. 22

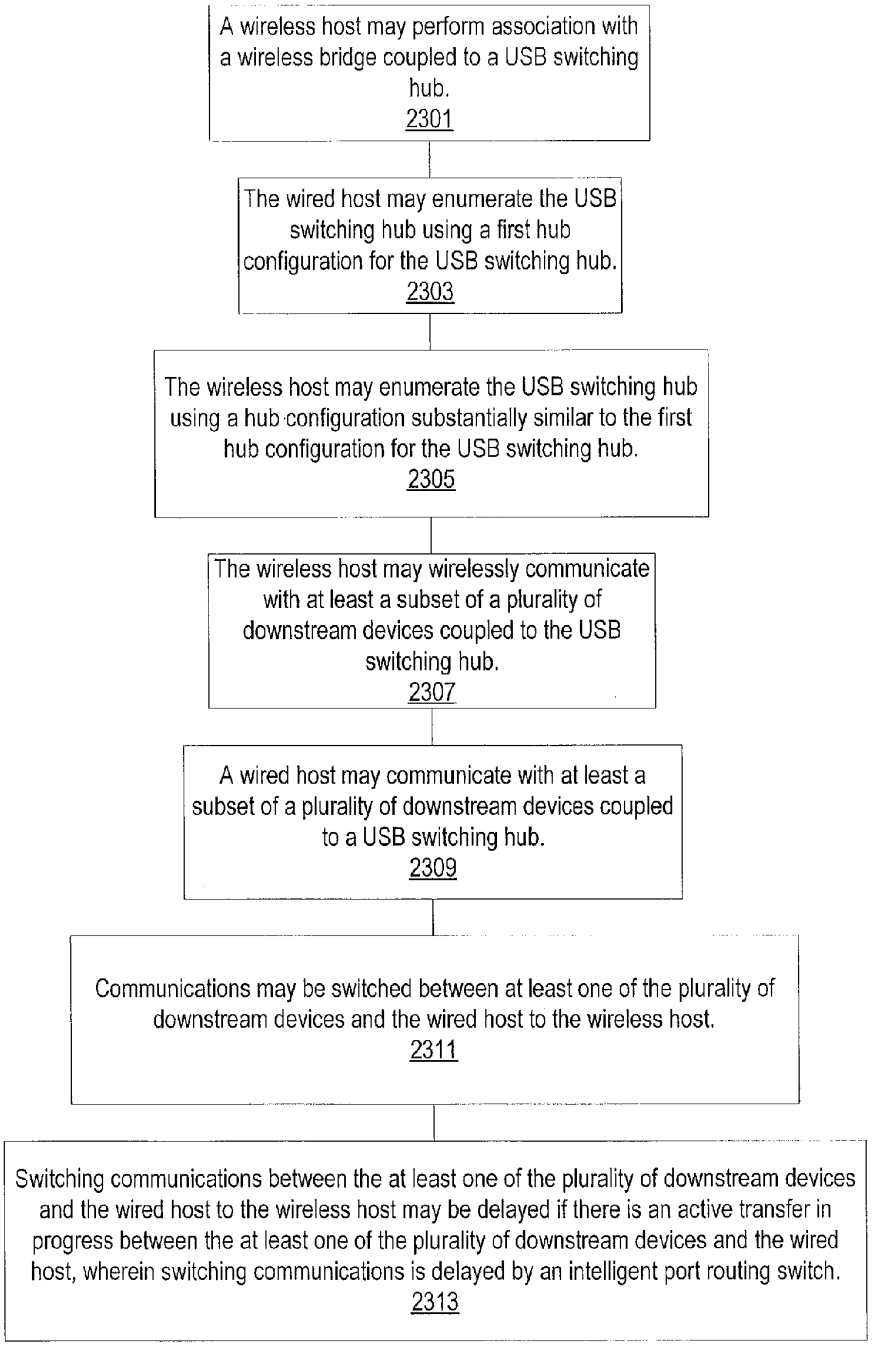
A wireless host may perform association with a wireless bridge coupled to a USB switching hub.
2301
The wired host may enumerate the USB switching hub using a first hub configuration for the USB switching hub.
2303
The wireless host may enumerate the USB switching hub using a hub configuration substantially similar to the first hub configuration for the USB switching hub.
2305
The wireless host may wirelessly communicate with at least a subset of a plurality of downstream devices coupled to the USB switching hub.
2307
A wired host may communicate with at least a subset of a plurality of downstream devices coupled to a USB switching hub.
2309
Communications may be switched between at least one of the plurality of downstream devices and the wired host to the wireless host.
2311
Switching communications between the at least one of the plurality of downstream devices and the wired host to the wireless host may be delayed if there is an active transfer in progress between the at least one of the plurality of downstream devices and the wired host, wherein switching communications is delayed by an intelligent port routing switch.
2313

FIG. 23

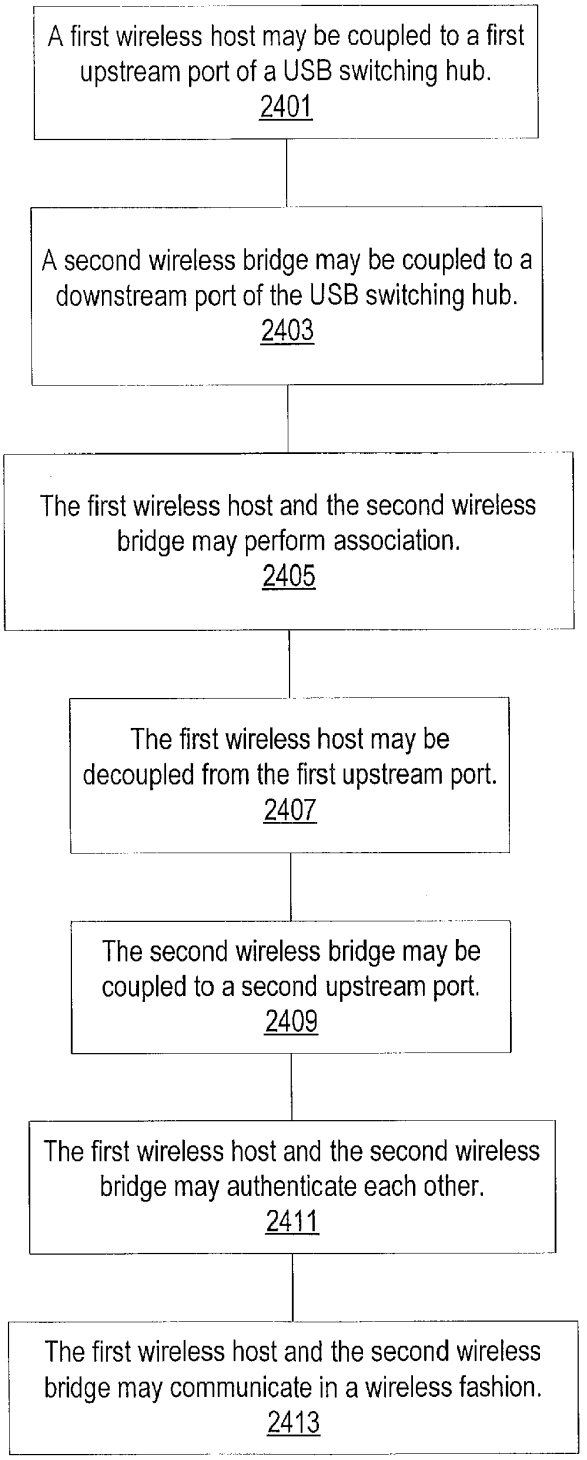
A first wireless host may be coupled to a first upstream port of a USB switching hub.
2401
A second wireless bridge may be coupled to a downstream port of the USB switching hub.
2403
The first wireless host and the second wireless bridge may perform association.
2405
The first wireless host may be decoupled from the first upstream port.
2407
The second wireless bridge may be coupled to a second upstream port.
2409
The first wireless host and the second wireless bridge may authenticate each other.
2411
The first wireless host and the second wireless bridge may communicate in a wireless fashion.
2413

FIG. 24

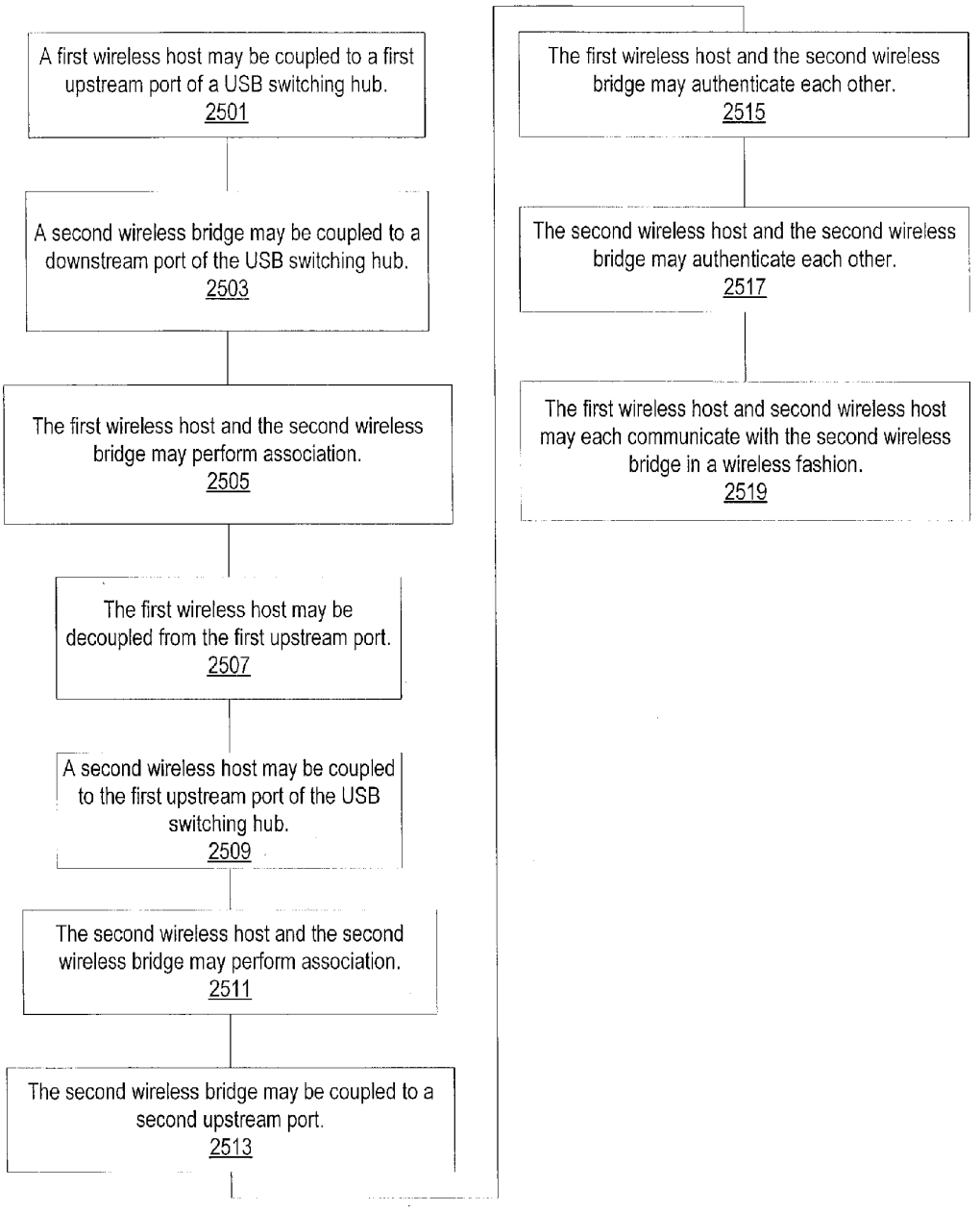
A first wireless host may be coupled to a first upstream port of a USB switching hub.
2501
A second wireless bridge may be coupled to a downstream port of the USB switching hub.
2503
The first wireless host and the second wireless bridge may perform association.
2505
The first wireless host may be decoupled from the first upstream port.
2507
A second wireless host may be coupled to the first upstream port of the USB switching hub.
2509
The second wireless host and the second wireless bridge may perform association.
2511
The second wireless bridge may be coupled to a second upstream port.
2513
The first wireless host and the second wireless bridge may authenticate each other.
2515
The second wireless host and the second wireless bridge may authenticate each other.
2517
The first wireless host and second wireless host may each communicate with the second wireless bridge in a wireless fashion.
2519

FIG. 25

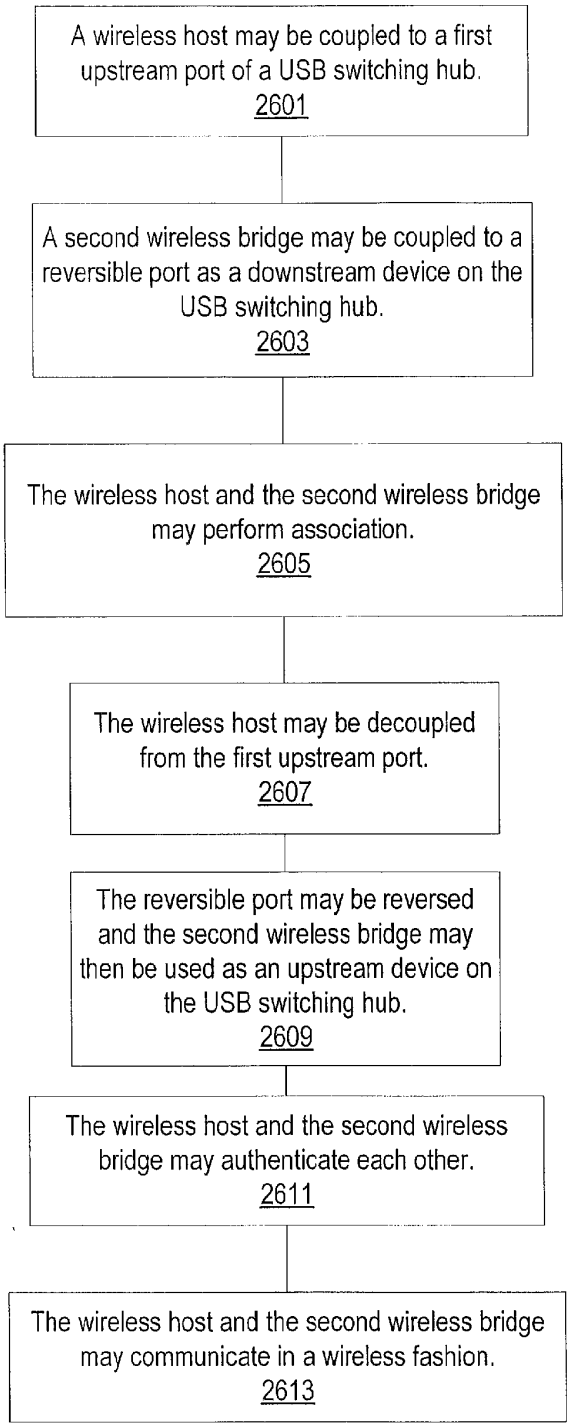
A wireless host may be coupled to a first upstream port of a USB switching hub.
2601
A second wireless bridge may be coupled to a reversible port as a downstream device on the USB switching hub.
2603
The wireless host and the second wireless bridge may perform association.
2605
The wireless host may be decoupled from the first upstream port.
2607
The reversible port may be reversed and the second wireless bridge may then be used as an upstream device on the USB switching hub.
2609
The wireless host and the second wireless bridge may authenticate each other.
2611
The wireless host and the second wireless bridge may communicate in a wireless fashion.
2613

FIG. 26

PERIPHERAL SHARING USB HUB FOR A WIRELESS HOST

BACKGROUND OF THE INVENTION

[0001] 1. Field of the Invention

[0002] The present invention relates generally to computer hardware and, more specifically, to Universal Serial Bus (USB) switching hubs.

[0003] 2. Description of the Related Art

[0004] The Universal Serial Bus (USB) allows coupling of peripheral devices to a computer system. USB is a serial cable bus for data exchange between a host computer and a wide range of simultaneously accessible devices. The bus allows peripherals to be attached, configured, used, and detached while the host is in operation. For example, USB printers, scanners, digital cameras, storage devices, card readers, etc. may communicate with a host computer system over USB. USB based systems may require that a USB host controller be present in the host system, and that the operating system (OS) of the host system support USB and USB Mass Storage Class Devices.

[0005] USB devices may communicate over the USB bus at low-speed (LS), full-speed (FS), or high-speed (HS). A connection between the USB device and the host may include four wires (a power line, a ground line, and a pair of data lines (D+ and D−). When a USB device connects to the host, the USB device may first pull a D+ line high (the D− line if the device is a low speed device) using a pull up resistor on the D+ line. The host may respond by resetting the USB device. If the USB device is a high-speed USB device, the USB device may "chirp" by driving the D− line high during the reset. The host may respond to the "chirp" by alternately driving the D+ and D− lines high. The USB device may then electronically remove the pull up resistor and continue communicating at high speed. When disconnecting, full-speed devices may remove the pull up resistor from the D+ line (i.e., "tri-state" the line), while high-speed USB devices may tri-state both the D+ and D− lines.

[0006] A USB hub may be coupled to a USB host controller to allow multiple USB devices to be coupled to the host system through the USB host controller. In addition, other USB hubs may be coupled to the USB hub to provide additional USB device connections to the USB host controller.

[0007] Some dual role peripheral devices may include a slave controller and be capable of communicating with other peripheral devices coupled to them. For example, a dual role USB printer may be able to communicate directly with a USB camera to print pictures from the USB camera. The dual role USB printer may also be accessible (e.g., by a computer system) as a slave peripheral device. If a computer system and dual role peripheral device need to alternately access a peripheral device, the peripheral device may need to be unplugged from one device and coupled to the other. Prior art device switches may not work for high-speed peripheral devices. For example, mechanical switches may introduce too much capacitance or inductance to work with high-speed peripheral devices. High-speed peripheral devices also typically require smooth impedance to prevent ringing (mechanical switches introduce irregularities in the impedance that may cause ringing).

[0008] The Wireless USB specification (revision 1.0 and 1.1) defines wireless USB. Part of Wireless USB is the requirement for "association" where the USB host may be introduced to a device either by the user entering a code of some sort, or via a wired means so the host and the device can communicate over a secure means prior to communicating over the wireless medium. A media access controller (MAC) may have a device port on it for association and a main data connection port for data transfer after the radio has been associated. The device port may be a dedicated port for attachment to a USB host for association only, and may have no other functionality. The channelization scheme presented in the Wireless USB specification, version 1.1, also references the ability to share the radio with other communication protocols such as Bluetooth.

SUMMARY OF THE INVENTION

[0009] In various embodiments, communications between each of the downstream ports and two or more upstream ports may be controlled by a USB switching hub. In some embodiments, devices coupled to upstream ports (e.g., wired and/or wireless hosts) of a USB switching hub may enumerate the USB switching hub according to the total number of downstream ports on the USB switching hub. In some embodiments, when first upstream port is communicating with a first downstream port, a second upstream port may be communicating with a different downstream port (as determined by a communication configuration implemented in switching logic in the USB switching hub). In some embodiments, when the first upstream port is communicating with the first downstream port, the second upstream port may perceive the first downstream port as disconnected. For example, status registers coupled to the second upstream port may indicate the first downstream port is disconnected (i.e., to appear that no device is electrically connected to the first downstream port). The disconnect status may prevent the second upstream device from attempting to reset and connect to a downstream device coupled to the first downstream port while a separate upstream device is communicating through the first upstream port with the first downstream device. By enumerating the USB switching hub according to the total number of downstream ports, the upstream devices may not have to re-enumerate the hub (and correspondingly each device coupled to the hub) each time a downstream device is switched.

[0010] In various embodiments, a wireless host (e.g., a laptop with a wireless bridge and transceiver) and a wired host may communicate with downstream devices through the USB switching hub. Communications between the downstream devices and the wireless host may pass through wireless bridges coupled to wireless transceivers between the wireless host and the USB switching hub. In some embodiments, multiple wireless hosts may communicate with downstream devices through the USB switching hub through one or more wireless bridges coupled to one or more upstream ports of the USB switching hub.

[0011] In some embodiments, the USB switching hub may be used to perform association (i.e., exchanging an encryption key to insure secure communications) between the wireless host and a wireless bridge coupled to the USB switching hub. A wireless host/wireless bridge may be temporarily physically coupled to the upstream port to complete association with a wireless bridge coupled to the USB switching hub as a downstream device through a downstream port. Other association methods are also possible (e.g., exchanging a code manually between the two wireless bridges without temporarily physically coupling the

two together). The wireless bridge that stays coupled to the USB switching hub during wireless communications may be internal to the USB switching hub. The wireless bridge may also communicate as a downstream device during association through a reversible port that may reverse to allow communications between the wireless bridge and the USB switching hub as an upstream device. During association, the wireless bridges may exchange an encryption key to be used for future wireless communications.

BRIEF DESCRIPTION OF THE DRAWINGS

[0012] A better understanding of the present invention may be obtained when the following detailed description is considered in conjunction with the following drawings, in which:

[0013] FIG. **1** illustrates a USB switching hub, according to an embodiment;

[0014] FIG. **2** illustrates a computer system coupled to a USB switching hub, according to an embodiment;

[0015] FIG. **3** illustrates a computer system and a dual role peripheral device coupled to a USB switching hub, according to an embodiment;

[0016] FIGS. **4***a* and **4***b* illustrate two communication configurations of the USB switching hub, according to an embodiment;

[0017] FIGS. **5***a*, **5***b*, and **5***c* illustrate additional communication configurations of the USB switching hub, according to an embodiment;

[0018] FIG. **6** illustrates unified functions within the USB switching hub, according to an embodiment;

[0019] FIG. **7** illustrates a method for switching access to a downstream port between two upstream ports, according to an embodiment;

[0020] FIG. **8** illustrates a USB switching hub with multiple status registers, according to an embodiment;

[0021] FIG. **9** shows a method for switching access to a downstream port between two upstream ports without reenumerating the USB switching hub, according to an embodiment;

[0022] FIG. **10** shows a method for monitoring a standby state to approve a communication switch, according to an embodiment;

[0023] FIG. **11** shows a method for monitoring hub transactions to approve a communication switch, according to an embodiment;

[0024] FIG. **12** shows a method for switching communications at a frame boundary, according to an embodiment;

[0025] FIG. **13** illustrates a computer system and a dual role peripheral device coupled to a USB switching hub, according to an alternate embodiment;

[0026] FIGS. **14***a* and **14***b* illustrate two communication configurations of the USB switching hub, according to an alternate embodiment;

[0027] FIGS. **15***a*, **15***b*, and **15***c* illustrate additional communication configurations of the USB switching hub, according to an alternate embodiment;

[0028] FIG. **16** illustrates a USB switching hub with multiple status registers, according to an alternate embodiment;

[0029] FIG. **17** illustrates an alternate embodiment of a computer system and a peripheral device coupled to a USB switching hub;

[0030] FIGS. **18***a*, **18***b*, and **18***c* illustrate the USB switching hub communicatively coupling to a wireless host, according to an embodiment;

[0031] FIGS. **18***d* and **18***e* illustrate various embodiments of the hub and switching logic;

[0032] FIG. **19** illustrates the USB switching hub with an internal wireless bridge, according to an embodiment;

[0033] FIG. **20** illustrates the USB switching hub with an internal wireless bridge and internal transceiver, according to an embodiment;

[0034] FIG. **21** illustrates the USB switching hub coupled to a plurality of wireless hosts, according to an embodiment;

[0035] FIG. **22** illustrates the USB switching hub with a reversible port, according to an embodiment;

[0036] FIG. **23** illustrates a method of using the USB switching hub to support a wireless host, according to an embodiment;

[0037] FIG. **24** illustrates a method for using the USB switching hub for associating a wireless host, according to an embodiment;

[0038] FIG. **25** illustrates a method for using the USB switching hub for supporting multiple wireless hosts, according to an embodiment; and

[0039] FIG. **26** illustrates a method for using the USB switching hub with a reversing PHY to support a wireless bridge as a downstream device during association and an upstream device during regular communications, according to an embodiment.

[0040] While the invention is susceptible to various modifications and alternative forms, specific embodiments thereof are shown by way of example in the drawings and will herein be described in detail. It should be understood, however, that the drawings and detailed description thereto are not intended to limit the invention to the particular form disclosed, but on the contrary, the intention is to cover all modifications, equivalents, and alternatives falling within the spirit and scope of the present invention as defined by the appended claims. Note, the headings are for organizational purposes only and are not meant to be used to limit or interpret the description or claims. Furthermore, note that the word "may" is used throughout this application in a permissive sense (e.g., having the potential to or being able to in some embodiments), not a mandatory sense (i.e., must). The term "include", and derivations thereof, mean "including, but not limited to". The term "coupled" means "directly or indirectly connected".

DETAILED DESCRIPTION OF EMBODIMENTS OF THE INVENTION

Incorporation by Reference

[0041] U.S. patent application Ser. No. 11/424,179 titled "Peripheral Sharing USB Hub" filed on Jun. 14, 2006, whose inventors are Mark R. Bohm, Mark Y. Fu, Henry Wurzburg, James E. Bowles, Robert E. Hollingsworth, Drew J. Dutton, and Akhlesh Nigam, is hereby incorporated by reference as though fully and completely set forth herein.

[0042] U.S. patent application Ser. No. 11/100,299 titled "Peripheral Sharing USB Hub" filed on Apr. 6, 2005, whose inventors are Mark R. Bohm, Mark Fu, Henry Wurzburg, James E. Bowles, Robert E. Hollingsworth, and Drew J. Dutton, is hereby incorporated by reference as though fully and completely set forth herein.

[0043] U.S. patent application Ser. No. 10/940,406 titled "Universal Serial Bus Switching Hub" filed on Sep. 14, 2004, whose inventors are Henry Wurzburg, James E. Bowles, Robert E. Hollingsworth, Mark R. Bohm, and Drew J. Dutton is hereby incorporated by reference as though fully and completely set forth herein.

[0044] U.S. patent application Ser. No. 11/412,431 titled "System and Method for Universal Serial Bus Hub Port Reversal" filed on Apr. 27, 2006, whose inventors are Mark R. Bohm, Donald L. Perkins, and Carl J. Crawford is hereby incorporated by reference as though fully and completely set forth herein.

[0045] FIG. **1** illustrates an embodiment of a USB switching hub. In various embodiments, USB switching hub **119** may control access between two or more upstream ports **117** on USB switching hub **119** and at least a subset of downstream ports **121** on USB switching hub **119**. In some cases, a numeric label may be used to refer to a collection of similar elements, or to a generic version of the element (e.g., "downstream ports **121**" may be used to reference one or more downstream ports **121***a*, **121***b*, **121***c*, and **121***d*).

[0046] In some embodiments, upstream devices coupled to upstream ports **117** may enumerate USB switching hub **119** according to the total number (N) of downstream ports **121**. For example, USB switching hub **119** may be enumerated as a 4-port hub (corresponding to the four downstream ports **121**). In some embodiments, communications between each of downstream ports **121** and upstream ports **117** may be controlled by USB switching hub **119**. In some embodiments, when first upstream port **117***a* is communicating with first downstream port **121***a*, second upstream port **117***b* may communicate with second downstream port **121***b*. Second upstream port **117***b* may register first downstream port **121***a* as disconnected. For example, status registers coupled to second upstream port **117***b* may indicate first downstream port **121***a* is disconnected (i.e., to appear that no device is electrically connected to first downstream port **121***a*). The disconnect status may prevent second upstream device **117***b* from attempting to reset and connect to first peripheral device **121***a* coupled to first downstream device **121***a* while a separate upstream device is communicating through first upstream port **117***a* with first downstream device **125***a*. By enumerating USB switching hub **119** as a 4-port hub, the upstream devices may not have to re-enumerate USB switching hub **119** (and correspondingly each downstream and/or upstream device coupled to the USB switching hub) each time a downstream device is switched.

[0047] In some embodiments, only one upstream device may access any one downstream device at a time. In some embodiments, multiple upstream devices may access separate downstream devices at the same time. In some embodiments, different communication configurations may be implemented. For example, first upstream port **117***a* may be allowed access to the first three downstream ports (**121***a*, **121***b*, and **121***c*) and second upstream port **117***b* may be allowed access to fourth downstream port **121***d*. Devices coupled to first upstream port **117***a* and second upstream port **117***b* may have enumerated USB switching hub **119** as a 4-port hub, but in this example, a device coupled to first upstream port **117***a* may register fourth downstream port **121***d* as disconnected while a device coupled to second upstream port **117***b* may register the first three downstream ports (**121***a*, **121***b*, and **121***c*) as disconnected.

[0048] In a second communication configuration, first upstream port **117***a* may be allowed to access fourth downstream port **121***d* while second upstream port **117***b* may be allowed to access the first three downstream ports (**121***a*, **121***b*, and **121***c*). Other communication configurations are also possible (e.g., in one communication configuration neither upstream port **117** may be allowed to access any downstream port **121**). In some embodiments, USB switching hub **119**, after receiving a control signal (e.g., from a computer, a different attached device, a person, a sensor, a logic internal to USB switching hub **119**, etc.), may switch between the first communication configuration and the second communication configuration (or another communication configuration). In some embodiments, USB switching hub **119** may not receive a control signal before switching communication configurations (e.g., switching access for first downstream device **125***a* from first upstream port **117***a* to second upstream port **117***b*).

[0049] FIG. **2** illustrates an embodiment of computer system **101** coupled to USB switching hub **119**. In some embodiments, computer system **101** (e.g., a personal computer (PC), laptop, server, etc.) may access multiple peripheral devices **125** coupled to USB switching hub **119**. Computer system **101** may couple to USB switching hub **119** through upstream port **117***a*. Computer system **101** may receive and transmit signals, e.g., USB signals, through host controller **111** coupled to device port **115**. While various embodiments may include computer system **101**, it is to be understood that other devices that have a host controller may also access USB switching hub **119**. Host controller **111**, coupled to south bridge **113**, may be coupled to other computer components (e.g., north bridge **105**, central processing unit (CPU) **103**, and system memory **107**) through peripheral component interconnect (PCI) bus **109**.

[0050] In some embodiments, USB switching hub **119** may have multiple downstream ports **121** for coupling to multiple peripheral devices **125**. Peripheral devices **125** may include USB printers, scanners, digital cameras, digital camera docks, consumer audio/video, storage devices, and card readers, among others. In some embodiments, peripheral devices **125** may couple to USB switching hub **119** through interface **123**. In some embodiments, interface **123** may be a PHY interface. Other interfaces may also be used (e.g., UTMI or ULPI). Upstream ports **117** and downstream ports **121** may also have interfaces.

[0051] FIG. **3** illustrates an embodiment of two upstream devices (e.g., computer system **101** and dual role peripheral device **207**) coupled to USB switching hub **119**. In some embodiments, USB switching hub **119** may include downstream switching logic **201**, coupled to one or more hub controllers **203** (e.g., hub controllers **203***a* and **203***b*). Downstream switching logic **201** may also be coupled to transaction translator circuitry **205**. Transaction translator **205** may be electronically coupled to downstream ports **121**. In some embodiments, downstream switching logic **201** may switch between two or more communication configurations. Communication configurations may be implemented by downstream switching logic **201** routing communications between upstream ports **117** and downstream ports **121** while the communications are in the digital domain (as a result of the interfaces to/from USB switching hub **119**). In some embodiments, communication configurations (e.g., hardwired in the USB switching hub) may be switched as

determined by logic on the USB switching hub. Other communication configuration implementations are also contemplated.

[0052] In some embodiments, dual role peripheral device **207** may include a dual role USB printer or dual role USB Digital Versatile Disc (DVD) read/write drive, among others. In some embodiments, dual role peripheral device **207** may be coupled to an upstream port (e.g., upstream port **117***b*) of USB switching hub **119** through device port **210**. Dual role peripheral device **207** may interface through upstream port **117***b* with other peripheral devices (downstream peripheral devices) coupled to USB switching hub **119** (e.g., using host controller **209** on dual role peripheral device **207**). Dual role peripheral device **207** may also interface with other upstream devices (such as computer system **101**) through a slave controller. For example, dual role peripheral device **207** may be coupled to USB switching hub **119** as a slave peripheral device (e.g., through downstream port **121***c*). In some embodiments, dual role peripheral device **207**, coupled to the USB switching hub, may simultaneously act as a host to one or more peripheral devices and/or as slave peripheral device to a separate host.

[0053] In some embodiments, dual role peripheral device **207** may have an embedded host controller application to operate as a standalone system (e.g., to communicate with another peripheral device, such as a digital camera, without PC intervention). For example, a dual role USB printer may print pictures directly from a digital camera, coupled to a downstream port **121** on USB switching hub **119**, without PC intervention. In some embodiments, USB switching hub **119** may alternately allow the computer system **101** or dual role peripheral device **207** to access one or more downstream devices (e.g., by switching between one or more communication configurations).

[0054] FIG. **4***a* illustrates an embodiment of a computer system **101** electronically coupled to multiple peripheral devices **125**. In some embodiments, USB switching hub **119** may act like a switch coupling multiple internal "hubs" that may share one or more downstream ports. For example, each potential communication configuration of the USB switching hub may represent an internal "hub". In some embodiments, when computer system **101** is accessing peripheral device **125** (e.g., peripheral device **125***a*) coupled to USB switching hub **119**, communications to/from the peripheral device may be processed through a first "hub" comprised of first upstream port **117***a*, hub controller **203***a*, transaction translator **205**, and at least a subset of the downstream ports **121**. A second "hub" may be comprised of second upstream port **117***b*, hub controller **203***b*, transaction translator **205**, and at least a subset of the downstream ports **121**. In one communication configuration, computer system **101** may connect to downstream ports **121***a* and **121***c* (through the first "hub"), and dual role peripheral device **207** may connect to downstream ports **121***b* and **121***d* (through the second "hub") (as seen in FIG. **4***b*). Other communication configurations are also contemplated. In some embodiments, communication configuration profiles designating which downstream devices to couple to each upstream port may be hardwired or implemented by software. For example, if implemented by software, communication configuration profiles for each upstream port (and/or upstream device) may be stored on a memory accessible to USB switching hub **119**.

[0055] In some embodiments, computer system **101** and dual role peripheral device **207** may communicate through USB switching hub **119** simultaneously with separate downstream devices. For example, while computer system **101** communicates with device **125***a* (e.g., through the first "hub"), dual role peripheral device **207** may communicate with device **125***b* (e.g., through the second "hub"). In some embodiments, while peripheral device **125***a* is being accessed through the first "hub", a different upstream device may not be able to access peripheral device **125***a* (e.g., dual role peripheral device **207** may not be able to access peripheral device **125***a* while peripheral device **125***a* is being used by computer system **101**). In some embodiments, a signal (e.g., from an external control block) may trigger downstream switching logic **201** to switch access for a subset of downstream ports **121** (e.g., downstream port **121***a* and/or **121***c*) on the first "hub" to the second "hub" (i.e., switch communication configurations). In some embodiments, dual role peripheral device **207** may send a control signal to USB switching hub **119**. USB switching hub **119** may then switch communication configurations to connect one or more downstream ports to the dual role peripheral device. For example, when a user presses a button on dual role peripheral device **207** (e.g., a dual role printer), a signal may be sent through mode **211** to downstream switching logic **201** to switch access of device **125***a* from computer system **101** to dual role peripheral device **207** (i.e., to switch to a second communication configuration as seen in FIG. **4***b*). Computer system **101** may continue to communicate with downstream port **121***c* (and/or other downstream ports as determined by the second communication configuration).

[0056] In some embodiments, when activity is no longer detected between dual role peripheral device **207** and a downstream port (e.g., if dual role peripheral device **207** is turned off), downstream switching logic **201** may switch access of the downstream port to computer system **101** (i.e., switch to a different communication configuration). In some embodiments, downstream switching logic **201** may switch access of the downstream port to a different upstream device. In some embodiments, instead of detecting inactivity, a signal from dual role peripheral device **207** may signal USB switching hub **119** to switch. Other signals and/or logic may also be used in determining when to switch communication configurations.

[0057] In some embodiments, communication configurations may be software implemented. In some embodiments, a microprocessor coupled to or comprised in downstream switching logic **201** may dynamically determine, e.g., using a dynamic communication configuration profile, which downstream ports to electrically couple to each upstream port. For example, the microprocessor may read a stored communication configuration profile and attempt to connect upstream ports to downstream ports according to the communication configuration profile. The communication configuration profiles may be stored on a memory (e.g., an Electronically Erasable Programmable Read-Only Memory (EEPROM)) coupled to USB switching hub **119**. In some embodiments, hub controllers **203** on USB switching hub **119** may have access to the communication configuration profiles.

[0058] In some embodiments, a priority logic may be used to switch communication configurations. Priority logic, or other logic used to grant access, may be internal or external to USB switching hub **119**. In some embodiments, computer

system **101** may be given priority over all of downstream ports **121** until an external control signal is sent from dual role peripheral device **207** to switch access of one or more downstream ports **121** to dual role peripheral device **207**. In some embodiments, different control signals may be sent to trigger different communication configurations (i.e., to switch access of different downstream ports to dual role peripheral device **207**).

[0059] In some embodiments, host negotiation logic may be used to determine which communication configuration to use. In some embodiments, a default communication configuration may be used until multiple upstream devices "request" access to the same downstream port. Host negotiation logic may be used to determine which communication configuration to use (i.e., which communication configuration gives a particular upstream port access to the "requested" downstream port).

[0060] In some embodiments, a microprocessor in USB switching hub **119** may include a built in algorithm that auto detects downstream peripheral devices and determines how to connect the downstream peripheral devices. For example, instead of assigning a specific downstream port to an upstream port, a communication configuration profile may specify that the upstream port should have access to a digital camera if one is attached. The built in algorithm may auto-detect the digital camera when it is attached to one of the downstream ports and attach it to the appropriate upstream port (i.e., by switching to an appropriate communication configuration).

[0061] In some embodiments, when downstream switching logic **201** switches communication configurations, and control of a downstream port is switched from computer system **101** to dual role peripheral device **207**, a connection between computer system **101** and respective peripheral device **125** (coupled to the downstream port to be switched) may be terminated by computer system **101**. In some embodiments, communications between the downstream port to be switched and computer system **101** may be terminated by USB switching hub **119**. Dual role peripheral device **207** may then connect to, enumerate, and communicate with the respective peripheral device **125** coupled to the switched downstream port.

[0062] Upstream devices may see downstream ports that they are not configured to attach to as unattached ports (i.e., active, but with no device connected). In some embodiments, if only a predetermined number of downstream ports is ever going to be attached to a particular upstream port (e.g., a number "x" ports), the upstream device may be signaled that the hub only has x ports. For example, if upstream port **117***b* is only going to be configured to attach to downstream ports **121***c* and **121***d*, a device attached to upstream port **117***b* may be signaled that USB switching hub **119** is only a two port hub.

[0063] FIGS. **5***a*, **5***b*, and **5***c* illustrate various embodiments of computer system **101** and two dual role peripheral devices coupled to USB switching hub **419**. In some embodiments, multiple dual role peripheral devices may be coupled to USB switching hub **419**. For example, dual role printer **407** may be coupled to USB switching hub **419** through upstream port **417***b* and dual role DVD read/write drive **467** may be coupled to USB switching hub **419** through upstream port **417***c*. Computer system **101** may be coupled to USB switching hub **419** through upstream port **417***a*. Each of the upstream devices may be coupled to a respective hub controller **403**, downstream switching logic **401**, and transaction translator **405**. Downstream switching logic **401** may configure communications between each of the upstream devices (i.e., computer system **101**, dual role printer **407**, or dual role DVD read/write drive **467**) and at least a subset of the peripheral devices **425**.

[0064] As seen in FIG. **5***a*, in one communication configuration profile, the computer system **101** may be connected to downstream ports **421***a*, **421***b*, **421***e*, and **421***f*. In an embodiment, dual role printer **407** may be configured to access downstream port **421***c*, and DVD read/write drive **467** may be configured not to access any downstream port **421**. Dual role printer **407** may gain access (i.e., have the communication configuration switched to give it access) to downstream port **421***b* through several different methods. For example, a user may press a button on dual role printer **407**. A signal may then be sent through mode **411** to downstream switching logic **401** in USB switching hub **419**. Downstream switching logic **401** may switch to the communication configuration seen in FIG. **5***b* (which allows dual role printer **407** to access downstream port **421***b*). In some embodiments, if dual role printer **407** is turned off or becomes inactive, downstream switching logic **401** may switch access of downstream port **421***b* back to computer system **101** (i.e., switch back to the previous communication configuration). As seen in FIG. **5***c*, in one communication configuration, none of the upstream ports may be allowed to access any of the downstream ports.

[0065] FIG. **6** illustrates an embodiment of unified functions within the USB switching hub. In some embodiments, instead of separate hub controllers, unified hub controller **503** may be used. For example, instead of separate hub controllers handling communications for their respective upstream port, a unified hub controller may handle communications for each of the upstream ports. Similarly, unified transaction translator **505** may be used for each respective upstream port. Also, as seen in FIG. **6**, in some embodiments, an upstream port switch **551** may be used. For example, the upstream port switch **551** may implement various communication configurations instead of a downstream switching logic.

[0066] In some embodiments, transaction translator(s) in the USB switching hub (e.g., USB switching hub **419** or USB switching hub **519**) may allow upstream ports to communicate at different communication speeds relative to the other upstream ports. For example, one upstream port may be coupled only to high speed devices and, therefore, communicate at high speed, while a separate upstream port may be coupled to only full speed devices and, therefore, communicate at full speed. In some embodiments, upstream ports may be able to communicate with different downstream ports at different speeds because of the transaction translators.

[0067] FIG. **7** shows an embodiment of a method for switching access to a downstream port between two upstream ports on the USB switching hub. It should be noted that in various embodiments of the methods described below, one or more of the elements described may be performed concurrently, in a different order than shown, or may be omitted entirely. Other additional elements may also be performed as desired.

[0068] At **701**, the USB switching hub may receive a signal (e.g., an external control signal) signaling the USB switching hub to switch between a first communication

configuration and a second communication configuration. For example, switching communication configurations may switch access of a first downstream port from a first upstream port to a second upstream port. In some embodiments, a user may press a button on a dual role peripheral device coupled to the USB switching hub, and the dual role peripheral device may send an external control signal to the USB switching hub to signal the USB switching hub to switch between one or more communication configurations. In some embodiments, the signal may be internal (e.g., generated by logic internal to the USB switching hub).

[0069] At **703**, communication between a host coupled to the first upstream port and the first peripheral device coupled to the first downstream port may be terminated. In some embodiments, communication may be terminated for a subset of the downstream peripheral devices.

[0070] At **705**, the USB switching hub may switch between the first communication configuration and the second communication configuration to give access of the first downstream port to the second upstream port. In some embodiments, the communication configuration switch may affect access for a subset of the downstream peripheral devices.

[0071] At **707**, the downstream peripheral device coupled to the first downstream port may be accessed through the second upstream port by the host coupled to the second upstream port. In some embodiments, the second upstream port may communicate with a subset of the downstream peripheral devices. For example, the host may enumerate and then communicate with the switched multiple downstream devices. In some embodiments, access between the first upstream port and a second downstream port may continue.

[0072] FIG. **8** illustrates a USB switching hub with multiple status registers, according to an embodiment. In some embodiments, upstream devices (e.g., computer system **101** and dual role device **207**) may communicate with downstream devices **125** through downstream ports **121**. In some embodiments, each upstream device may enumerate USB switching hub **119** as a 4-port hub (or according to the number of downstream ports **121** on the USB switching hub **119**). In some embodiments, external signal **813** may signal downstream switching logic **201** to switch communications for a subset of downstream ports **121** (e.g., downstream ports **121***a* and **121***b*). When communications are being switched, a status register (e.g., a status register in a set of status registers **811***a*) may indicate a disconnect status for the previously connected downstream port). In some embodiments, communications between the downstream port and the second upstream device may then be established. For example, activity from downstream port **121***a* may indicate a connect event on a status register for downstream port **121***a* in the second set of status registers **811***b*. The second upstream device (e.g., dual role device **207**) may detect the "connect" event when it poles status registers **811***b* and then reset the device coupled to downstream port **121***a*. While the second upstream device is communicating through downstream port **121***a*, other upstream devices coupled to other upstream ports may detect a "disconnect" for downstream port **121***a* when they poll their respective set of status registers **811**.

[0073] In some embodiments, intelligent port routing switch (IPRS) **821** may delay switching communications for downstream port **125***a* if there is an active transfer in progress between downstream port **125***a* and first upstream port **117***a*. In some embodiments, IPRS **821** may delay switching communications for downstream port **125***a* if there is an active transfer in progress between downstream port **125** and second upstream port **117***b*. In some embodiments, IPRS **821** may be implemented in hardware and/or firmware on USB switching hub **119**. In some embodiments, the IPRS may be implemented in software on computer system **101**. The IPRS may include software and drivers that have knowledge of current USB traffic to delay a request to switch a device that is in use. In some embodiments, the IPRS may be entirely outside of any traffic monitoring internal to USB switching hub **119**.

[0074] IPRS **821** may delay switching communications between other downstream ports **125** if there are pending or active transfers in progress. In some embodiments, IPRS **821** may monitor communications at the hub controller **203** level or may monitor communications at the downstream switching logic level. Other placements between downstream ports **121** and upstream ports **117** may also be used. In some embodiments, instead of relying on intelligent monitoring or an external method for delaying switching communications, IPRS **821** may operate to delay switching such that switching takes place at the USB frame boundary (when, by definition, no traffic is permitted to be in progress). In such embodiments, switching may be delayed until the frame boundary on a predetermined basis, not as a result of intelligent monitoring.

[0075] In some embodiments, external signal **813** (e.g., from a user, from computer system **101**, or from mode **211** on dual role device **207**) may signal downstream switching logic **201** to switch communications between a downstream port **121** and the upstream ports **117**. Other sources of external signal **813** are also contemplated (e.g., the external signal may originate from a physical switch coupled to USB switching hub **119**). In some embodiments, the physical switch may have switches, push buttons and/or other mechanical components to allow a user to assign one or more downstream ports **121** to specific upstream port **117**. In some embodiments, external signal **813** may be sent from computer system **101**. For example, an application executing on computer system **101** may allow a user to interact with computer system **101** to assign one or more downstream ports **121** to specific upstream port **117**. In some embodiments, computer system **101** may also receive signals back from USB switching hub **119** to communicate with the user. For example, if there are transfers between a related downstream port and an upstream port, USB switching hub **119** may communicate this status to the user, and USB switching hub **119** may wait until it receives confirmation from the user to proceed with the switch (e.g., a signal may be sent from computer system **101** confirming the switch after a user selects a graphical "Proceed" box on a computer screen coupled to computer system **119**.)

[0076] FIG. **9** shows an embodiment of a method for switching access to downstream port **121** between two upstream ports without reenumerating USB switching hub **119**. It should be noted that in various embodiments of the methods described below, one or more of the elements described may be performed concurrently, in a different order than shown, or may be omitted entirely. Other additional elements may also be performed as desired.

[0077] At **901**, a peripheral device may be coupled to a downstream port of a USB switching hub. In some embodi-

ments, the peripheral device may be a USB device. The USB device may also be coupled to an upstream device (i.e., the USB device may be a dual role USB device).

[0078] At **903**, a first upstream device may be coupled to first upstream port **117***a* of the USB switching hub **119**.

[0079] At **905**, a second upstream device may be coupled to second upstream port **117***b* of USB switching hub **119**.

[0080] At **907**, the first upstream device may enumerate USB switching hub **119** using a first hub configuration for USB switching hub **119**. For example, if USB switching hub **119** has four downstream ports **121**, the first upstream device may enumerate USB switching hub **119** as a 4-port hub. In some embodiments, the first upstream device may enumerate USB switching hub **119** with fewer downstream ports **121** than the total number of downstream ports **121** on USB switching hub **119** (e.g., if one or more downstream ports **121** is permanently inactive or reserved for another use).

[0081] At **909**, the second upstream device may enumerate USB switching hub **119** using a hub configuration substantially similar to the first hub configuration for USB switching hub **119**.

[0082] At **911**, the downstream port coupled to the peripheral device may be assigned to the second upstream port. In some embodiments, communications between the peripheral device and the first upstream port may be switched to the second upstream port. In some embodiments, if device **125***a* is a digital camera, it may be initially coupled to computer system **101** (i.e., communications to/from the digital camera may be routed to first upstream port **117***a* in downstream switching logic **201** while the communications are in the digital domain). External signal **813** (e.g., from a user through computer system **101**) may signal downstream switching logic **201** to switch communications between device **125***a* and two upstream ports **117**.

[0083] At **913**, a disconnect status may be indicated on a status register, corresponding to the switched downstream port, coupled to hub controller **203***a* of first upstream port **117***a*. Communications may be terminated between downstream device **125***a* and an upstream device coupled to first upstream port **117***a*.

[0084] At **915**, a connect event may be indicated on a status register, corresponding to the switched downstream port, coupled to hub controller **203***b* of second upstream port **117***b*. When second upstream device **207** (e.g., a dual role printer) reads the connect event on the status register, it will reset device **125***a* coupled to downstream port **121***a*. Downstream device **125***a* may connect to upstream device **207** for further communications (e.g., to print pictures directly from the digital camera).

[0085] At **917**, switching communications of a downstream port **121** may be delayed if there is an active transfer in progress between a downstream port **121** and the first upstream port. Switching communications may be delayed by IPRS **821**.

[0086] At **919**, switching communications of a downstream port **121** may be delayed if there is an active transfer in progress between a downstream port **121** and second upstream port **117***b*. Switching communications may be delayed by IPRS **821**.

[0087] FIG. **10** shows an embodiment of a method for monitoring a standby state to approve a communication switch. It should be noted that in various embodiments of the methods described below, one or more of the elements described may be performed concurrently, in a different order than shown, or may be omitted entirely. Other additional elements may also be performed as desired.

[0088] At **1001**, IPRS **821** may monitor status registers **811** to determine if peripheral device **125** is actively being used by an upstream device. For example, IPRS **821** may determine if a corresponding status register has a "selective suspend" or a standby state indicated for corresponding downstream port **121**.

[0089] At **1003**, downstream switching logic **201** may check IPRS **821** prior to making a switch for an indication as to whether there are current communications between a downstream port **121** to be switched or between downstream ports **121** coupled to upstream port **117** for which a downstream port **121** will be switched. In some embodiments, downstream switching logic **201** may query IPRS **821** to determine if multiple downstream ports **121** may be switched.

[0090] At **1005**, IPRS **821** may indicate to downstream switching logic **201** whether a switch of communications for one or more downstream ports **121** may proceed. For example, logic on IPRS **821** may determine which downstream ports **121** the status should be checked (e.g., downstream ports **121** to be switched and downstream ports **121** coupled to the upstream port **117** being switched to). In some embodiments, IPRS **821** may check the corresponding status register when downstream switching logic **201** inquires as to a specific downstream port.

[0091] At **1007**, if a "selective suspend" or a standby state is not indicated, IPRS **821** may continue to monitor the corresponding status register for a predetermined amount of time after IPRS **821** receives an inquiry from downstream switching logic **201** that a switch is desired. At the end of the predetermined amount of time, if the "selective suspend" or a standby state is still not indicated, IPRS **821** may indicate to downstream port controller **201** that it may switch despite the apparent active status. In some embodiments, if the "selective suspend" or a standby state is not indicated, an indication may be sent to computer system **101** to ask the user if a switch should be made despite the apparent active status of one or more affected peripheral devices **125**. If the user approves the switch, downstream switching logic **201** may proceed with the switch.

[0092] FIG. **11** shows an embodiment of a method for monitoring hub transactions to approve a communication switch. It should be noted that in various embodiments of the methods described below, one or more of the elements described may be performed concurrently, in a different order than shown, or may be omitted entirely. Other additional elements may also be performed as desired.

[0093] At **1101**, IPRS **821** may monitor transactions through USB switching hub **119** to determine if any of the communications are going to/from relevant peripheral devices (e.g., coupled to a downstream port **121** to be switched or already coupled to upstream port **117** for which peripheral device **125** will be switched to). In some embodiments, the presence of communications and the type of communications may be monitored by IPRS **821**. IPRS **821** may monitor communications at any of various points of USB switching hub **119** (e.g., coupled to hub controllers **203**, downstream switching logic **201**, and/or coupled directly to downstream ports **121** and/or upstream ports **117**). IPRS **821** may monitor communications using additional internal logic. In some embodiments, IPRS **821** may

not interfere with communications between downstream ports **121** and upstream ports **117**.

[0094] At **1103**, downstream switching logic **201** may check IPRS **821** prior to making a switch for an indication as to whether there are current communications between a downstream port **121** to be switched or between downstream ports **121** coupled to upstream port **117** for which a downstream port **121** will be switched.

[0095] At **1105**, IPRS **821** may indicate to downstream switching logic **201** whether a switch of communications for one or more downstream ports **121** may proceed.

[0096] FIG. **12** shows an embodiment of a method for switching communications at a frame boundary. It should be noted that in various embodiments of the methods described below, one or more of the elements described may be performed concurrently, in a different order than shown, or may be omitted entirely. Other additional elements may also be performed as desired.

[0097] At **1201**, IPRS **821** may coordinate a communications switch by downstream switching logic **201** to occur on a frame boundary of communications between upstream port **117** and related downstream ports **121**. In some embodiments, IPRS **821** may interface with one or more hub controllers **203** to determine the timing of the frame boundaries. For example, a microframe timer may be used. In some embodiments, IPRS **821** may interface with other parts of USB switching hub **119** to determine a time to affirm a request to switch from downstream switching logic **201**.

[0098] At **1203**, downstream switching logic **201** may check IPRS **821** prior to making a switch for an indication as to whether a frame boundary is occurring for communications to/from the relevant downstream ports **121**.

[0099] At **1205**, IPRS **821** may indicate to downstream switching logic **201** whether a switch of communications for one or more downstream ports **121** may proceed.

[0100] Referring again to FIGS. **3**, **4***a*-**4***b*, **5***a*-**5***c*, and **8**, it should be noted that the positions of the downstream switching logic (**201** in FIGS. **3**, **4***a*-**4***b* and **8**, and **401** in FIGS. **5***a*-**5***c*) and the transaction translator logic (**205** in FIGS. **3**, **4***a*-**4***b* and **8**, and **405** in FIGS. **5***a*-**5***c*) with respect to each other may be reversed, that is, the transaction translator logic may be configured between the hub controller(s) and the downstream switching logic. Furthermore, an individual transaction translator block may be configured for each upstream port (and corresponding hub controller.) Examples of alternate embodiments showing this configuration are found in FIGS. **13**, **14***a*-**14***b*, **15***a*-**15***c*, and **16**.

[0101] FIG. **13** illustrates an alternate embodiment of the configuration shown in FIG. **3**, in which two upstream devices (e.g., computer system **101** and dual role peripheral device **207**) are coupled to USB switching hub **119**. In some embodiments, USB switching hub **119** may include respective transaction translator circuitry **205***a* and **205***b* for each upstream port **117***a* and **117***b*, coupled to corresponding hub controller **203***a* and **203***b*, respectively. Transaction translator circuitry **205***a* and **205***b* may also be coupled to downstream switching logic **201**, which may be electronically coupled to downstream ports **121**. In some embodiments, downstream switching logic **201** may switch between two or more communication configurations. Communication configurations may be implemented by downstream switching logic **201** routing communications between upstream ports **117** and downstream ports **121** while the communications are in the digital domain (as a result of the interfaces to/from USB switching hub **119**), as also described for the embodiment of FIG. **3**. In some embodiments, communication configurations (e.g., hardwired in the USB switching hub) may be switched as determined by logic on the USB switching hub. Other communication configuration implementations are also contemplated.

[0102] As also described for the embodiment of FIG. **3**, in some embodiments, dual role peripheral device **207** may include a dual role USB printer or dual role USB Digital Versatile Disc (DVD) read/write drive, among others. In some embodiments, dual role peripheral device **207** may be coupled to an upstream port (e.g., upstream port **117***b*) of USB switching hub **119** through device port **210**. Dual role peripheral device **207** may interface through upstream port **117***b* with other peripheral devices (downstream peripheral devices) coupled to USB switching hub **119** (e.g., using host controller **209** on dual role peripheral device **207**). Dual role peripheral device **207** may also interface with other upstream devices (such as computer system **101**) through a slave controller. For example, dual role peripheral device **207** may be coupled to USB switching hub **119** as a slave peripheral device (e.g., through downstream port **121***c*). In some embodiments, dual role peripheral device **207**, coupled to the USB switching hub, may simultaneously act as a host to one or more peripheral devices and/or as slave peripheral device to a separate host.

[0103] In some embodiments, dual role peripheral device **207** may have an embedded host controller application to operate as a standalone system (e.g., to communicate with another peripheral device, such as a digital camera, without PC intervention). For example, a dual role USB printer may print pictures directly from a digital camera, coupled to a downstream port **121** on USB switching hub **119**, without PC intervention. In some embodiments, USB switching hub **119** may alternately allow the computer system **101** or dual role peripheral device **207** to access one or more downstream devices (e.g., by switching between one or more communication configurations).

[0104] FIGS. **14***a* and **14***b* illustrate alternate embodiments of the embodiments shown in FIGS. **4***a* and **4***b* of a computer system electronically coupled to multiple peripheral devices. In some embodiments, USB switching hub **119** may act like a switch coupling multiple internal "hubs" that may share one or more downstream ports. For example, each potential communication configuration of the USB switching hub may represent an internal "hub". In some embodiments, when computer system **101** is accessing peripheral device **125** (e.g., peripheral device **125***a*) coupled to USB switching hub **119**, communications to/from the peripheral device may be processed through a first "hub" comprised of first upstream port **117***a*, hub controller **203***a*, transaction translator **205***a*, and at least a subset of the downstream ports **121**. A second "hub" may be comprised of second upstream port **117***b*, hub controller **203***b*, transaction translator **205***b*, and at least a subset of the downstream ports **121**. In one communication configuration, computer system **101** may connect to downstream ports **121***a* and **121***c* (through the first "hub"), and dual role peripheral device **207** may connect to downstream ports **121***b* and **121***d* (through the second "hub") (as seen in FIG. **14***b*). Other communication configurations are also contemplated. In some embodiments, communication configuration profiles designating which downstream devices to couple to each upstream port may be hardwired or implemented by software. For example, if

implemented by software, communication configuration profiles for each upstream port (and/or upstream device) may be stored on a memory accessible to USB switching hub **119**.

[0105] In some embodiments, computer system **101** and dual role peripheral device **207** may communicate through USB switching hub **119** simultaneously with separate downstream devices. For example, while computer system **101** communicates with device **125***a* (e.g., through the first "hub"), dual role peripheral device **207** may communicate with device **125***b* (e.g., through the second "hub"). In some embodiments, while peripheral device **125***a* is being accessed through the first "hub", a different upstream device may not be able to access peripheral device **125***a* (e.g., dual role peripheral device **207** may not be able to access peripheral device **125***a* while peripheral device **125***a* is being used by computer system **101**). In some embodiments, a signal (e.g., from an external control block) may trigger downstream switching logic **201** to switch access for a subset of downstream ports **121** (e.g., downstream port **121***a* and/or **121***c*) on the first "hub" to the second "hub" (i.e., switch communication configurations). In some embodiments, dual role peripheral device **207** may send a control signal to USB switching hub **119**. USB switching hub **119** may then switch communication configurations to connect one or more downstream ports to the dual role peripheral device. For example, when a user presses a button on dual role peripheral device **207** (e.g., a dual role printer), a signal may be sent through mode **211** to downstream switching logic **201** to switch access of device **125***a* from computer system **101** to dual role peripheral device **207** (i.e., to switch to a second communication configuration as seen in FIG. **14***b*). Computer system **101** may continue to communicate with downstream port **121***c* (and/or other downstream ports as determined by the second communication configuration).

[0106] In some embodiments, when activity is no longer detected between dual role peripheral device **207** and a downstream port (e.g., if dual role peripheral device **207** is turned off), downstream switching logic **201** may switch access of the downstream port to computer system **101** (i.e., switch to a different communication configuration). In some embodiments, downstream switching logic **201** may switch access of the downstream port to a different upstream device. In some embodiments, instead of detecting inactivity, a signal from dual role peripheral device **207** may signal USB switching hub **119** to switch. Other signals and/or logic may also be used in determining when to switch communication configurations.

[0107] In some embodiments, communication configurations may be software implemented. In some embodiments, a microprocessor coupled to or comprised in downstream switching logic **201** may dynamically determine, e.g., using a dynamic communication configuration profile, which downstream ports to electrically couple to each upstream port. For example, the microprocessor may read a stored communication configuration profile and attempt to connect upstream ports to downstream ports according to the communication configuration profile. The communication configuration profiles may be stored on a memory (e.g., an Electronically Erasable Programmable Read-Only Memory (EEPROM)) coupled to USB switching hub **119**. In some embodiments, hub controllers **203** on USB switching hub **119** may have access to the communication configuration profiles.

[0108] In some embodiments, a priority logic may be used to switch communication configurations. Priority logic, or other logic used to grant access, may be internal or external to USB switching hub **119**. In some embodiments, computer system **101** may be given priority over all of downstream ports **121** until an external control signal is sent from dual role peripheral device **207** to switch access of one or more downstream ports **121** to dual role peripheral device **207**. In some embodiments, different control signals may be sent to trigger different communication configurations (i.e., to switch access of different downstream ports to dual role peripheral device **207**).

[0109] In some embodiments, host negotiation logic may be used to determine which communication configuration to use. In some embodiments, a default communication configuration may be used until multiple upstream devices "request" access to the same downstream port. Host negotiation logic may be used to determine which communication configuration to use (i.e., which communication configuration gives a particular upstream port access to the "requested" downstream port).

[0110] In some embodiments, a microprocessor in USB switching hub **119** may include a built in algorithm that auto detects downstream peripheral devices and determines how to connect the downstream peripheral devices. For example, instead of assigning a specific downstream port to an upstream port, a communication configuration profile may specify that the upstream port should have access to a digital camera if one is attached. The built in algorithm may auto-detect the digital camera when it is attached to one of the downstream ports and attach it to the appropriate upstream port (i.e., by switching to an appropriate communication configuration).

[0111] In some embodiments, when downstream switching logic **201** switches communication configurations, and control of a downstream port is switched from computer system **101** to dual role peripheral device **207**, a connection between computer system **101** and respective peripheral device **125** (coupled to the downstream port to be switched) may be terminated by computer system **101**. In some embodiments, communications between the downstream port to be switched and computer system **101** may be terminated by USB switching hub **119**. Dual role peripheral device **207** may then connect to, enumerate, and communicate with the respective peripheral device **125** coupled to the switched downstream port.

[0112] Upstream devices may see downstream ports that they are not configured to attach to as unattached ports (i.e., active, but with no device connected). In some embodiments, if only a predetermined number of downstream ports is ever going to be attached to a particular upstream port (e.g., a number "x" ports), the upstream device may be signaled that the hub only has x ports. For example, if upstream port **117***b* is only going to be configured to attach to downstream ports **121***c* and **121***d*, a device attached to upstream port **117***b* may be signaled that USB switching hub **119** is only a two port hub.

[0113] FIGS. **15***a*, **15***b*, and **15***c* illustrate various alternate embodiments of the embodiments shown in FIGS. **5***a*, **5***b*, and **5***c* of a computer system **101** and two dual role peripheral devices coupled to USB switching hub **419**. In some embodiments, multiple dual role peripheral devices may be coupled to USB switching hub **419**. For example, dual role printer **407** may be coupled to USB switching hub **419**

through upstream port **417***b* and dual role DVD read/write drive **467** may be coupled to USB switching hub **419** through upstream port **417***c*. Computer system **101** may be coupled to USB switching hub **419** through upstream port **417***a*. Each of the upstream devices may be coupled to a respective hub controller **403** (**403***a*, **403***b* and **403***c*, as shown), a respective transaction translator **405** (**405***a*, **405***b*, and **405***c*, as shown), and downstream switching logic **401**. Downstream switching logic **401** may configure communications between each of the upstream devices (i.e., computer system **101**, dual role printer **407**, or dual role DVD read/write drive **467**) and at least a subset of the peripheral devices **425**.

[0114] As seen in FIG. **15***a*, in one communication configuration profile, the computer system **101** may be connected to downstream ports **421***a*, **421***b*, **421***e*, and **421***f*. In an embodiment, dual role printer **407** may be configured to access downstream port **421***c*, and DVD read/write drive **467** may be configured not to access any downstream port **421**. Dual role printer **407** may gain access (i.e., have the communication configuration switched to give it access) to downstream port **421***b* through several different methods. For example, a user may press a button on dual role printer **407**. A signal may then be sent through mode **411** to downstream switching logic **401** in USB switching hub **419**. Downstream switching logic **401** may switch to the communication configuration seen in FIG. **15***b* (which allows dual role printer **407** to access downstream port **421***b*). In some embodiments, if dual role printer **407** is turned off or becomes inactive, downstream switching logic **401** may switch access of downstream port **421***b* back to computer system **101** (i.e., switch back to the previous communication configuration). As seen in FIG. **15***c*, in one communication configuration, none of the upstream ports may be allowed to access any of the downstream ports.

[0115] FIG. **16** illustrates an alternate embodiment of the USB switching hub with multiple status registers shown in FIG. **8**. In this embodiment, each hub controller (**203***a* and **203***b*) is coupled to corresponding transaction translator circuitry (**205***a* and **205***b*, respectively). Translator circuitry **205***a* and **205***b*, may be coupled to downstream switching logic **201**, which may be electrically coupled to downstream ports **121***a*, **121***b*, **121***c*, and **121***d*. Switching hub **119** may operate according to the same principles and procedures as described for the embodiment of switching hub **119** shown in FIG. **8**.

[0116] FIG. **17** illustrates another embodiment of the configuration shown in FIG. **13**, in which two upstream devices (e.g., computer system **101** and dual role peripheral device **207**) are coupled to USB switching hub **119**. While in the embodiment of FIG. **13** (and in the embodiments of FIG. **3**, FIGS. **4***a*-**4***b* and FIGS. **14***a*-**14***b*) the downstream control of USB switching hub **119** is linked with dual role device **207**, alternate embodiments may be configured with other switching control means. For example, as illustrated in FIG. **17**, switching control of USB switching hub **119** may be performed using a dedicated downstream device, for example HID class device **125***e*, coupled to a dedicated downstream port, for example dedicated downstream port **121***e*. Another control mechanism may comprise an additional HID device (not shown) configured at the hub controller level within the hierarchy of the configuration shown in FIG. **17** (for example, at hub controller **203***a* or **203***b*). However, operating the additional HID device for controlling the switching of USB switching hub **119** may require custom drivers and a USB-IF class extension to the hub class, which may be covered under a vendor-specific implementation. Mechanisms other than an HID may also be possible with a semi-custom hub driver. Alternatively, a composite device comprising a hub controller and HID controller may be configured to control switching of USB switching hub **119**, shown in FIG. **17** as HID controller/HUB controller composite devices **204***a* and **204***b*. While FIG. **17** illustrates a variety of configurations associated with possible control mechanisms for controlling switching of USB switching hub **119**, various embodiments may include only one of, or any combination of these configurations and/or mechanisms.

[0117] FIGS. **18***a*, **18***b*, and **18***c* illustrate the USB switching hub **119** communicatively coupling to a wireless host **1809**, according to an embodiment. FIG. **18***c* illustrates an embodiment of the USB switching hub **119** communicatively coupled to a wireless host **1809** and a wired host **1801**. The USB switching hub **119** may be operable to allow communication between multiple upstream devices (e.g., wired and/or wireless hosts) and downstream devices **125**. For example, the USB switching hub **119** may facilitate communication between the wired host **1801**, wireless host **1809**, and downstream devices **125***a*, **125***b*, and **125***c* attached through downstream ports **121***a*, **121***b*, and **121***c*. In some embodiments, downstream devices **125** may be wireless USB devices. Other numbers and types of wired and/or wireless hosts and downstream devices are also contemplated. The USB switching hub **119** may implement various communication configurations through the hub and switching logic **1813** that allow the wired and/or wireless hosts to access subsets or all of the downstream devices **125***a*-*c*. For example, in one communication configuration, the wired host **1801** may access a downstream device (e.g., USB device **125***a*) substantially simultaneously as the wireless host **1809** is accessing another downstream device (e.g., USB device **125***b*). In some embodiments, the wired host **1801** and the wireless host **1809** may not substantially simultaneously access the same downstream device.

[0118] In some embodiments, wireless host **1809** (e.g., a laptop with a wireless bridge **1812** and transceiver **1808**) may communicate with one or more downstream devices **125***a*-*c* through the USB switching hub **119**. Communications between the downstream devices **125***a*-*c* and the wireless host **1809** may pass through wireless bridges **1810**, **1812** coupled to wireless transceivers **1807**, **1808** (respectively). Wired host **1801** may also communicate with one or more downstream devices **125***a*-*c* through the USB switching hub **119**. In some embodiments, another wireless host may be communicatively coupled through upstream port **117***a* instead of wired host **1801**.

[0119] As seen in FIGS. **18***d* and **18***e*, different configurations of the hub and switching logic **1813** may be used. The hub and switching logic **1813** may include hub controllers **203***a* and **203***b* (e.g., one for each upstream port) coupled to transaction translators **205***a* and **205***b* and downstream switching logic **201**. In some embodiments, the order of the transaction translators **205***a,b* and downstream switching logic **201** may be reversed. Other configurations are also contemplated. FIG. **18***e* illustrates another embodiment of the hub and switching logic **1813** with status registers **811***a* and **811***b* coupled to the hub controllers **203***a,b*, respectively. IPRS **821** is also shown coupled to the

hub controllers **203***a,b*. In addition, a single transaction translator **1899** is shown (in some embodiments, multiple transaction translators may be used). In some embodiments, the status registers **811***a* and **811***b* may be operable to indicate which downstream ports are "disconnected" for the respective communication configuration currently being implemented in the USB switching hub **119**. In some embodiments, each upstream device may enumerate the USB switching hub according to its total number of downstream ports (other numbers of ports for enumeration are also contemplated). The downstream switching logic **201** may receive an external signal **813**, e.g., to signal the hub and switching logic **1813** to switch communications for a subset of downstream ports **125***a-c*.

[0120] In some embodiments, wireless USB hosts and devices may use association to implement secure communications. Association may include making an initial connection between a host (e.g., host **1809**/wireless bridge **1812**) and a device (e.g., wireless bridge **1810**), verifying the host and the device to each other, and deriving an initial encryption key for future communications. In some embodiments, a wireless host **1809** and the device (e.g., wireless bridge **1810**) may use a temporary physical connection (e.g., by both physically coupling to the USB switching hub **119** and/or connecting through a cable as seen in FIG. **18***b*) to make the initial connection, verification, and key derivation. Wireless hosts and devices may use a symmetric encryption algorithm such as Wireless USB Advanced Encryption Standard (AES)-128 Counter with Cipher Block Chaining Message Authentication Code (CBC-MAC) (CCM) or Wireless USB AES-128 Counter with CBC-MAC (CCM). Other encryption methods such as public key encryption may also be used.

[0121] In some embodiments, the wireless bridge **1810** may include a downstream device port **1815** which may be coupled to a downstream port **121***d* of the USB switching hub **119**. As seen in FIG. **18***b*, the wireless host **1809**/wireless bridge **1812** may be temporarily physically coupled to the first upstream port (e.g., PHY **117***a*) to complete association with the wireless bridge **1810** coupled as a downstream device through downstream port **121***d*. In various embodiments, either or both the host **1809** and wireless bridge **1812** may be temporarily physically coupled to the first upstream port **117***a* as the host for association (e.g., wireless bridge **1812** may be coupled to first upstream port **117***a* to perform association with wireless bridge **1810** without being coupled to wireless host **1809** during association). Host **1809**/wireless bridge **1812** and wireless bridge **1810** may exchange an encryption key (e.g., a symmetric key) through connection **1835** (e.g., host **1809**/wireless bridge **1812** may send an encryption key to wireless bridge **1810** or wireless bridge **1810** may send an encryption key to host **1809**/wireless bridge **1812**). As used herein, the term "exchange" may be used to refer to a one-way transfer. As seen in FIG. **18***c*, the host **1809**/wireless bridge **1812** may be physically disconnected from the USB switching hub **119** and the host **1809**/wireless bridge **1812** and wireless bridge **1810** may use the encryption key for future wireless communications. In some embodiments, instead of being physically coupled to the USB switching hub **119**, a code may be entered into the host **1809**/wireless bridge **1812** (e.g., a code from the wireless bridge **1810**). In some embodiments, the code may be read off of the wireless bridge **1810** and entered through a keypad into the host **1809**/wireless bridge **1812**. The host **1809**/wireless bridge **1812** may generate an encryption key using the code (the wireless bridge **1810** may have generated the same encryption key using the code and a pre-established method). Other methods of association and key exchange are also contemplated. The wireless bridge **1810** may electronically attach to the wireless bridge **1812** by sending the host **1809**/wireless bridge **1812** a message and then proceeding through an authenticating process involving their unique identifications (IDs) and the encryption key. Host software on host **1809**/wireless bridge **1812** may be notified of the "attached" wireless bridge **1810** after the association process is completed. In some embodiments, downstream devices **125** may include one or more wireless downstream devices that may also proceed with association with the wireless bridge **1810** or wireless bridge **1812** (although, in some embodiments, the downstream devices **125** may not separately associate but may communicate through the wireless bridge **1810**).

[0122] In some embodiments, wireless hosts and devices may use the exchanged keys to authenticate each other during future connection requests (e.g., see the Wireless Universal Serial Bus Specification, Revision 1.0). The keys may also be used to encrypt and decrypt future transmissions. The device (e.g., wireless bridge **1810**) and the host (e.g., host **1809**/wireless bridge **1812**) may establish a connection context (CC) with a unique host ID (CHID), a unique device ID (CDID), and connection key (CK) (a symmetric encryption key). In some embodiments, the CC may be created by a host device and sent to a device on the first connection (and/or by using an out-of-band method). The CK may be unique for each device for which the host is connected. The CK may be used to derive a pair-wise temporal key (PTK) through four-way handshakes (between the host and the device) for use by the host and device in encrypting/decrypting communications. During four-way handshakes, the host and the device may exchange a random nonce and an identifier of the key they are using. The device and host may then perform key generation using the random nonces to generate a message integrity code (MIC) that are also exchanged. If the device and host verify the received MIC (based on the CK), the device and host may know that they are communicating with a device/host that has the previously established key and therefore can be trusted. The device and host may also use the exchanged nonces to generate initial session keys (which may be used as PTKs for encryption/decryption of future communications between the host and the device). In some embodiments, the wireless bridge **1810** may handle encryption/decryption for communications from the downstream devices **125** (e.g., using one PTK for communications from the devices **125**). In some embodiments, the separate keys may be used for communications from each device **125**.

[0123] In some embodiments, a media access controller (MAC) **1805** may be included (as part of a data link layer for transporting data packets) on the wireless bridge **1810** to, for example, control access to the transceiver **1807**. The MAC **1811** on wireless bridge **1812** may, for example, control access to the transceiver **1808**. The data link layer may also include a logical link control (LLC) for multiplexing protocols and providing flow control over the transceivers **1807**, **1808**. MAC **1805** may be coupled to the USB switching hub **119** through host interface **1823** and upstream port **117***b*. MAC **1811** may be coupled to the host **1809** through host interface **1814**.

[0124] In some embodiments, MACs **1805** and **1811** may insert source and destination addresses into transmitted frames to enable the receiving MAC to determine which frames are being sent to its device. These addresses may include MAC addresses (unique identifiers for the communicating devices). MACs **1805** and **1811** may also recognize the beginning and ending of frames received and transmitted and may detect transmission errors. Transmissions between wireless transceivers **1807** and **1808** may include token, data, and handshake packets (or packets containing a combination of these types). Other packet configurations are also contemplated. In some embodiments, the MACs **1805** and **1811** may work with the data link layer in their respective wireless bridges to encode/decode bit streams into/out of data packets and provide transmission protocol knowledge and management.

[0125] In some embodiments, wireless host **1809** may also communicate with other wireless devices in addition to the wired devices coupled to the USB switching hub **119**. Wireless host **1809** may also communicate with other wired peripheral devices coupled to a device wire adapter.

[0126] FIG. **19** illustrates an embodiment of the USB switching hub **1921** with an internal wireless bridge **1910**. As seen in FIG. **19**, the wireless bridge **1910** with MAC **1905** may be internal to the USB switching hub **1921**. In this embodiment, the downstream device port **1915** on the wireless bridge may also be internal and may be internally coupled to a downstream port of the hub and switching logic **1813**. The internal connection **1935** may be used during the initial association with the wireless host **1809** (e.g., when the wireless host **1809** is initially physically coupled to upstream port **117***a* of the USB switching hub **1921**). The MAC **1905** may communicate with the downstream devices **125** through main interface **1923** and hub and switching logic **1813**. FIG. **20** illustrates an embodiment of the USB switching hub **2021** with an internal wireless bridge **1910** and internal transceiver **2007**.

[0127] FIG. **21** illustrates an embodiment of the USB switching hub **2121** coupled to a plurality of wireless hosts **2109***a*, **2109***b*. Multiple wireless hosts **2109***a*, **2109***b* may be coupled to the USB switching hub **2121** through transceiver **2107** and their respective transceivers **2108***a*, **2108***b* to share downstream devices **125**. The host **2109***a* and host **2109***b* may each be coupled separately to upstream port **117***a* to exchange an encryption key with wireless bridge **2110**. Wireless bridge **2110** may be coupled to two or more upstream ports **2123***a* and **2123***b* of the USB switching hub **2121**. The encryption keys may be exchanged through connection **1935** with downstream device port **2115** on the wireless bridge **2110**. The wireless bridge **2110** may use each respective encryption key to communicate with the wireless hosts **2109***a* and **2109***b* when the wireless hosts **2109***a* and **2109***b* are not physically attached to the USB switching hub **2121**. The MACs **2111***a* and **2111***b* may coordinate with MAC **2105** to communicate through transceivers **2107**, **2108***a*, and **2108***b*. Wireless bridge **2110** may facilitate communications between the wireless hosts **2109***a,b* and the downstream devices **125** through upstream ports **2123***a* and **2123***b*. In some embodiments, each wireless host may communicate with a separate wireless bridge coupled to the USB switching hub **2121** (e.g., each separate wireless bridge coupled to a separate upstream port).

[0128] FIG. **22** illustrates an embodiment of the USB switching hub **2221** with a reversible port **2231**. The USB switching hub **2221** reversible port **2231** may include switching logic operable to switch upstream and downstream logic to allow the reversible port **2231** to act as a downstream port or an upstream port when communicating through interface **2223** (e.g., see U.S. patent application Ser. No. 11/412,431 incorporated by reference above). The reversible port **2231** may perform as a downstream port to connect wireless bridge **2210** to the USB switching hub **2221** as a downstream device when the wireless host **1809** is physically coupled to the USB switching hub **2221** for association purposes (e.g., to exchange keys with wireless bridge **2210** through connection **2235**). The reversible port **2231** may then switch over to operating as an upstream port for the wireless bridge **2210** when the wireless host **1809**/wireless bridge **1812** is not physically coupled to the USB switching hub **2221** but is instead communicating with the downstream devices **125***a*, **125***b*, and **125***c* through the USB switching hub **2221** in a wireless fashion. Input directing a switch may be received from any of a variety of sources (e.g., logic within the USB switching hub **2221**, wireless bridge **2210**, a user, etc.), and may set or invoke a switching condition, which may then be detected by the USB switching hub **2221**. In some embodiments, the reversible port **2231** may coordinate with the hub and switching logic **1813** to implement switching upstream and downstream logic as needed.

[0129] FIG. **23** illustrates a method of using the USB switching hub to support a wireless host, according to an embodiment. Various embodiments of the USB switching hub supporting a wireless host may be seen, for example, in FIGS. **18***c* and **19-22**. The method shown in FIG. **23** is described below with respect to FIGS. **18***a-c*, but it is to be understood that the method is also applicable to other embodiments described above. It should be noted that in various embodiments of the methods described below, one or more of the elements described may be performed concurrently, in a different order than shown, or may be omitted entirely. Other additional elements may also be performed as desired.

[0130] At **2301**, a wireless host **1809** may perform association with a wireless bridge **1810** coupled to the USB switching hub **119**. The wireless host **1809** and wireless bridge **1810** performing association may each be coupled to a separate upstream port of the USB switching hub **119** (e.g., see FIG. **18***b*). After association, the wireless host **1809** may be removed from the upstream port **117***a* of the USB switching hub **119**, and in some embodiments, a wired host **1801** may be coupled to the upstream port **117***a*.

[0131] At **2303**, the wired host **1801** may enumerate the USB switching hub **119** using a first hub configuration for the USB switching hub **119**. In some embodiments, the downstream devices **125** coupled to the USB switching hub **119** may be enumerated by the wired host **1801** when the USB switching hub **119** is enumerated.

[0132] At **2305**, the wireless host **1809** may enumerate the USB switching hub **119** using a hub configuration substantially similar to the first hub configuration for the USB switching hub **119**. In some embodiments, the downstream devices **125** coupled to the USB switching hub **119** may be enumerated by the wireless host **1809** when the USB switching hub **119** is enumerated.

[0133] At **2307**, the wireless host **1809** may wirelessly communicate with at least a subset of a plurality of down-

stream devices **125** coupled to the USB switching hub **119** through the wireless bridge **1810**.

[0134] At **2309**, a wired host **1801** may communicate with at least a subset of a plurality of downstream devices **125** coupled to a USB switching hub **119**. In some embodiments, the wireless host **1809** and the wired host **1801** may communicate substantially simultaneously with separate downstream devices **125** coupled to the USB switching hub **119**.

[0135] At **2311**, communications may be switched between at least one of the plurality of downstream devices **125** and the wired host **1801** to the wireless host **1809**. In some embodiments, the USB switching hub **119** may not be re-enumerated when communications are switched. In some embodiments, communications may be switched between at least one of the plurality of downstream devices **125** and the wireless host **1809** to the wired host **1801**.

[0136] At **2313**, switching communications between the at least one of the plurality of downstream devices **125** and the wired host **1801** to the wireless host **1809** may be delayed if there is an active transfer in progress between the at least one of the plurality of downstream devices **125** and the wired host **1801**, wherein switching communications is delayed by an intelligent port routing switch (e.g., see IPRS **821** in FIG. **18***e*). In some embodiments, communications may be similarly delayed when switching communications between the plurality of downstream devices **125** and the wireless host **1809** to the wired host **1801** if there is an active transfer in progress between the at least one of the plurality of downstream devices **125** and the wireless host **1809**.

[0137] FIG. **24** illustrates a method for using the USB switching hub for associating a wireless host, according to an embodiment. The method shown in FIG. **24** is described below with respect to FIGS. **18***a-c*, but it is to be understood that the method is also applicable to other embodiments described above. It should be noted that in various embodiments of the methods described below, one or more of the elements described may be performed concurrently, in a different order than shown, or may be omitted entirely. Other additional elements may also be performed as desired.

[0138] At **2401**, a first wireless host **1809** (which may include host **1809** and/or associated wireless bridge **1812**) may be coupled to a first upstream port **117***a* of a USB switching hub **119**. One or more downstream devices **125** may be coupled to downstream ports **121** of the USB switching hub **119**.

[0139] At **2403**, a second wireless bridge **1810** may be coupled to a downstream port **121***d* of the USB switching hub **119**.

[0140] At **2405**, the first wireless host **1809** and the second wireless bridge **1810** may perform association.

[0141] At **2407**, the first wireless host **1809** may be decoupled from the first upstream port **117***a*. For example, see FIG. **18***c* in which wireless host **1809** has been decoupled from the USB switching hub **119** and wired host **1801** has been coupled to the upstream port **117***a*.

[0142] At **2409**, the second wireless bridge **1810** may be coupled to a second upstream port **117***b*. The second wireless bridge **1810** may have been coupled to the second upstream port **117***b* prior to association.

[0143] At **2411**, the first wireless host **1809** and the second wireless bridge **1810** may authenticate each other.

[0144] At **2413**, the first wireless host **1809** and the second wireless bridge **1810** may communicate in a wireless fashion. The wireless bridge **1812** coupled to the wireless host **1809** may cooperate with wireless bridge **1810** coupled to USB switching hub **119** to allow communications between the wireless host **1809** and the downstream devices **125** coupled to the USB switching hub **119**.

[0145] FIG. **25** illustrates a method for using the USB switching hub for supporting multiple wireless hosts, according to an embodiment. The method shown in FIG. **25** is described below with respect to FIG. **21**, but it is to be understood that the method is also applicable to other embodiments described above. It should be noted that in various embodiments of the methods described below, one or more of the elements described may be performed concurrently, in a different order than shown, or may be omitted entirely. Other additional elements may also be performed as desired.

[0146] At **2501**, a first wireless host **2109***a* may be coupled to a first upstream port **117***a* of a USB switching hub **2121**. One or more downstream devices **125** may be coupled to downstream ports **121** of the USB switching hub **2121**.

[0147] At **2503**, a second wireless bridge **2110** may be coupled to a downstream port of the USB switching hub **2121**. In some embodiments, the downstream port may be internal to the hub (e.g., the wireless bridge **2110** may internally couple to the hub and switching logic **1813**).

[0148] At **2505**, the first wireless host **2109***a* (and/or wireless bridge **2112***a*) and the second wireless bridge **2110** may perform association.

[0149] At **2507**, the first wireless host **2109***a* (and/or wireless bridge **2112***a*) may be decoupled from the first upstream port **117***a*.

[0150] At **2509**, a second wireless host **2109***b* (and/or wireless bridge **2112***b*) may be coupled to the first upstream port **117***a* of the USB switching hub **2121**.

[0151] At **2511**, the second wireless host **2109***b* (and/or wireless bridge **2112***b*) and the second wireless bridge **2110** may perform association. In some embodiments, the second wireless bridge **2110** may use a separate encryption key when communicating with the first wireless host **2109***a* than when communicating with the second wireless host **2109***b*. The second wireless bridge **2110** may use different identifiers in communications for each of the first and second wireless hosts **2109***a,b*.

[0152] At **2513**, the second wireless bridge **2110** may be coupled to a second upstream port(s). The second wireless bridge may have been coupled to the second upstream port(s) prior to association. In some embodiments, the second wireless bridge **2110** may be coupled to one upstream port per wireless host. For example, as seen in FIG. **21**, wireless bridge **2110** is coupled through upstream port **2123***a* (for communications between wireless host **2109***a* and at least a subset of downstream devices **125**) and upstream port **2123***b* (for communications between wireless host **2109***b* and at least a subset of downstream devices **125**). In some embodiments, a separate wireless bridge may be used in the USB switching hub for each wireless host.

[0153] At **2515**, the first wireless host **2109***a* and the second wireless bridge **2110** may authenticate each other.

[0154] At **2517**, the second wireless host **2109***b* and the second wireless bridge **2110** may authenticate each other.

[0155] At **2519**, the first wireless host **2109***a* and second wireless host **2109***b* may each communicate with the second wireless bridge **2110** in a wireless fashion. The first wireless host **2109***a* and the second wireless host **2109***b* may communicate with downstream devices **125** coupled to the USB

switching hub **2121** at substantially the same time (e.g., through two respective upstream ports **2123***a,b* coupled to second wireless bridge **2110**). The second wireless bridge **2110** may coordinate communications to and from wireless bridges **2112***a* and **2112***b* to allow communication between the wireless hosts **2109***a,b* and the downstream devices **125**. For example, unique identifiers may be used to identify communications between each wireless host and its respective downstream device(s). In some embodiments, first wireless host **2109***a* and second wireless host **2109***b* may communicate with separate wireless bridges each coupled to a different upstream port of the USB switching hub **2121**.

[0156] FIG. **26** illustrates a method for using the USB switching hub (e.g., see USB switching hub **2221** in FIG. **22**) with a reversible port **2231** to support a wireless bridge **2210** as a downstream device during association and an upstream device during regular communications, according to an embodiment. It should be noted that in various embodiments of the methods described below, one or more of the elements described may be performed concurrently, in a different order than shown, or may be omitted entirely. Other additional elements may also be performed as desired.

[0157] At **2601**, a wireless host **1809** may be coupled to a first upstream port **117***a* of a USB switching hub **2221**.

[0158] At **2603**, a second wireless bridge **2210** may be coupled to a reversible port **2231** as a downstream device on the USB switching hub **2221**. In some embodiments, the reversible port **2231** may be signaled to perform as a downstream port. Logic in the USB switching hub **2221** may be manipulated to support the reversible port **2231** as a downstream port.

[0159] At **2605**, the wireless host **1809** and the second wireless bridge **2210** may perform association.

[0160] At **2607**, the wireless host **1809** may be decoupled from the first upstream port **117***a*.

[0161] At **2609**, the reversible port **2231** may be reversed (e.g., through a signal sent to the reversible port **2231** and/or USB switching hub **2221**) and the second wireless bridge **2210** may then be used as an upstream device on the USB switching hub **2210**.

[0162] At **2611**, the wireless host **1809** and the second wireless bridge **2210** may authenticate each other.

[0163] At **2613**, the wireless host **1809** and the second wireless bridge **2210** may communicate in a wireless fashion. The wireless bridge **1812** and second wireless bridge **2210** may coordinate to allow communications between the wireless host **1809** and the downstream devices **125** coupled to the USB switching hub **2221**.

[0164] Embodiments of a subset or all (and portions or all) of the above may be implemented by program instructions stored in a memory medium or carrier medium and executed by a processor. A memory medium may include any of various types of memory devices or storage devices. The term "memory medium" is intended to include an installation medium, e.g., a Compact Disc Read Only Memory (CD-ROM), floppy disks, or tape device; a computer system memory or random access memory such as Dynamic Random Access Memory (DRAM), Double Data Rate Random Access Memory (DDR RAM), Static Random Access Memory (SRAM), Extended Data Out Random Access Memory (EDO RAM), Rambus Random Access Memory (RAM), etc.; or a non-volatile memory such as a magnetic media, e.g., a hard drive, or optical storage. The memory medium may comprise other types of memory as well, or combinations thereof. In addition, the memory medium may be located in a first computer in which the programs are executed, or may be located in a second different computer that connects to the first computer over a network, such as the Internet. In the latter instance, the second computer may provide program instructions to the first computer for execution. The term "memory medium" may include two or more memory mediums that may reside in different locations, e.g., in different computers that are connected over a network.

[0165] In some embodiments, a computer system at a respective participant location may include a memory medium(s) on which one or more computer programs or software components according to one embodiment of the present invention may be stored. For example, the memory medium may store one or more programs that are executable to perform the methods described herein. The memory medium may also store operating system software, as well as other software for operation of the computer system.

[0166] Further modifications and alternative embodiments of various aspects of the invention may be apparent to those skilled in the art in view of this description. Accordingly, this description is to be construed as illustrative only and is for the purpose of teaching those skilled in the art the general manner of carrying out the invention. It is to be understood that the forms of the invention shown and described herein are to be taken as embodiments. Elements and materials may be substituted for those illustrated and described herein, parts and processes may be reversed, and certain features of the invention may be utilized independently, all as would be apparent to one skilled in the art after having the benefit of this description of the invention. Changes may be made in the elements described herein without departing from the spirit and scope of the invention as described in the following claims.

What is claimed is:

1. An apparatus, comprising:

a Universal Serial Bus (USB) switching hub, comprising:
a plurality of upstream ports; and
a plurality of downstream ports;

wherein a first upstream port of the plurality of upstream ports is operable to couple to a first host;

wherein a second upstream port of the plurality of upstream ports is operable to communicate with a wireless host;

wherein the at least a subset of downstream ports of the plurality of downstream ports are accessible to the first upstream port and the second upstream port.

2. The apparatus of claim **1**, wherein the USB switching hub further comprises:

downstream switching logic coupled between the plurality of upstream ports and the plurality of downstream ports;

wherein the plurality of downstream ports consists of N downstream ports;

wherein the downstream switching logic is configured to electronically switch communications between:

a) a downstream port of the plurality of downstream ports and a first upstream port of the plurality of upstream ports to

b) the downstream port of the plurality of downstream ports and a second upstream port of the plurality of upstream ports;

wherein the USB switching hub is configured to be enumerated with a substantially similar hub configuration through each of the plurality of upstream ports;

wherein the hub configuration includes N downstream ports.

3. The apparatus of claim **1**, wherein the USB switching hub is operable to switch communications without upstream devices coupled to the first upstream port and the second upstream being required to re-enumerate the USB switching hub.

4. The apparatus of claim **1**, wherein the second upstream port is coupled to a media access controller and a transceiver.

5. The apparatus of claim **1**, further comprising a wireless bridge coupled to a downstream port of the USB switching hub for association with the wireless host when the wireless host is coupled to the first upstream port.

6. The apparatus of claim **5**, wherein the wireless bridge is internal to the USB switching hub.

7. The apparatus of claim **6**, wherein the wireless bridge and the transceiver are internal to the USB switching hub.

8. The apparatus of claim **1**, wherein the wireless host includes a media access controller and a transceiver.

9. The apparatus of claim **1**, wherein the second port comprises switching logic operable to switch upstream logic and downstream logic with respect to the second port and at least a subset of the plurality of downstream ports, respectively.

10. The apparatus of claim **1**, wherein the second upstream port is operable to communicatively couple to a plurality of wireless hosts.

11. A method, comprising:

communicating between a wired host and at least a subset of a plurality of downstream devices coupled to a Universal Serial Bus (USB) switching hub; and

wirelessly communicating between a wireless host and at least a subset of a plurality of downstream devices coupled to the USB switching hub.

12. The method of claim **11**, further comprising associating a wireless host with a wireless bridge coupled to a USB switching hub.

13. The method of claim **12**, wherein associating the wireless host comprises:

physically coupling the wireless host to a first upstream port of the USB switching hub;

physically coupling a wireless bridge to a downstream port of the USB switching hub; and

implementing an association protocol between the wireless host and the wireless bridge.

14. The method of claim **12**, wherein associating the wireless host comprises entering a code from one of the wireless host and the wireless bridge to the other of the wireless host and the wireless bridge.

15. The method of claim **11**, further comprising:

the wired host enumerating the USB switching hub using a first hub configuration for the USB switching hub;

the wireless host enumerating the USB switching hub using a hub configuration substantially similar to the first hub configuration for the USB switching hub; and

switching communications between at least one of the plurality of downstream devices and the wired host to the wireless host.

16. The method of claim **15**, wherein the wireless host is not required to re-enumerate the USB switching hub when communications are switched.

17. The method of claim **11**, wherein the wired host communicates with at least a subset of a plurality of downstream devices coupled to the USB switching hub substantially simultaneously with the wireless host communicating with at least a subset of a plurality of downstream devices coupled to the USB switching hub.

18. A system, comprising:

a Universal Serial Bus (USB) switching hub, comprising:

a plurality of upstream ports;

a plurality of downstream ports; and

downstream switching logic coupled between the plurality of upstream ports and the plurality of downstream ports;

wherein a first upstream port of the plurality of upstream ports is operable to couple to a first host;

wherein a second upstream port of the plurality of upstream ports is operable to communicate with a second wireless host;

wherein the at least a subset of downstream ports of the plurality of downstream ports are accessible to the first upstream port and the second upstream port;

wherein the USB switching hub is configured to be enumerated with a substantially similar hub configuration by each of the plurality of upstream devices coupled to its respective one of the plurality of upstream ports.

19. The system of claim **18**, wherein the USB switching hub is operable to switch communications without upstream devices coupled to the first host and the second wireless host being required to re-enumerate the USB switching hub.

20. The system of claim **18**, further comprising delaying switching communications of the subset of the plurality of downstream ports if there is an active transfer in progress between the downstream port and the first upstream port, wherein switching communications is delayed by an intelligent port routing switch.

21. The system of claim **1**, wherein the first host is a second wireless host.

* * * * *