US 20100265179A1

(19) United States

(12) Patent Application Publication

Ram

(10) Pub. No.: US 2010/0265179 A1

(43) Pub. Date: Oct. 21, 2010

(54) **COMPUTER APPARATUS WITH ADDED FUNCTIONALITY**

(76) Inventor: **Pranil Ram**, Makati City (PH)

Correspondence Address:
MR. PRANIL RAM
c/o APT. 313, 6390 WILLINGDON AVE
BURNABY, BC V5H2V5 (CA)

(21) Appl. No.: **12/816,531**

(22) Filed: **Jun. 16, 2010**

Related U.S. Application Data

(63) Continuation of application No. 11/609,991, filed on Dec. 13, 2006, which is a continuation-in-part of application No. 11/160,090, filed on Jun. 8, 2005, now abandoned.

(60) Provisional application No. 60/577,593, filed on Jun. 8, 2004, provisional application No. 60/597,601, filed on Dec. 13, 2005, provisional application No. 60/597,745, filed on Dec. 19, 2005.

Publication Classification

(51) **Int. Cl.**
G06F 3/033 (2006.01)
G06F 3/02 (2006.01)

(52) **U.S. Cl.** **345/163**; 345/168

(57) **ABSTRACT**

A computer apparatus such as a mouse apparatus or a keyboard apparatus with additional functionality or features disposed within the apparatus enclosure. Each additional functionality enhances the overall functionality of the computer apparatus. In the preferred embodiments, the additional devices include a remote control, a multiple host mouse apparatus, a multiple host keyboard apparatus, various trackpoint-style devices and other control devices, mouse apparatus with various integrated displays and various means of extending or retracting said integrated displays, fingerprint readers, USB receptacles and hub devices, various mouse apparatus enclosure covers with various devices disposed within said enclosure cover, a fuel cell, a dual sensor mouse apparatus, miniature mouse apparatus and their associated wireless transmitters, keyboard apparatus with IR and IrDA remote control ports, solar panels as a power source, and the like.

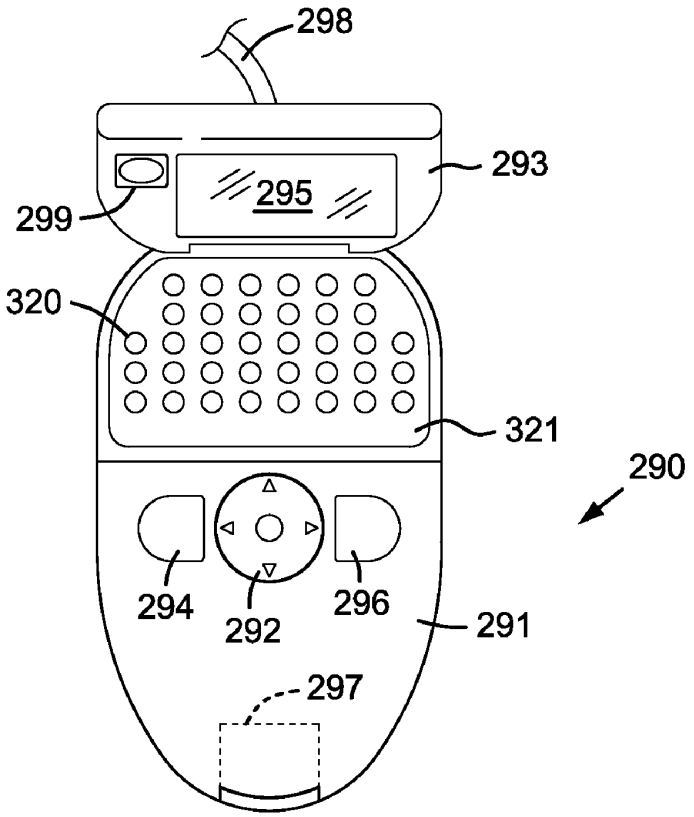

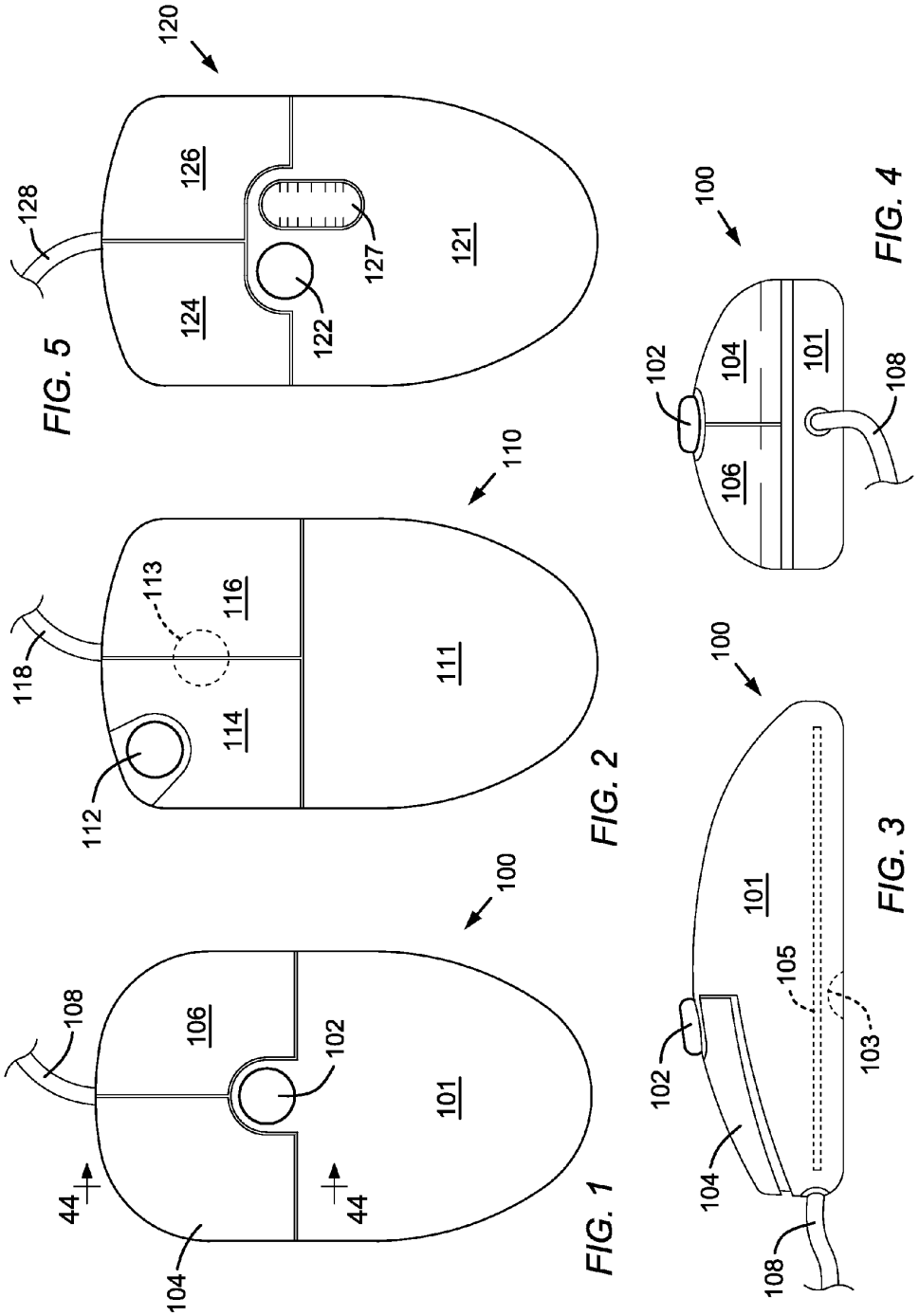
120
126
128
127
121
124
122
FIG. 5
110
113
116
118
111
114
112
FIG. 2
100
108
106
102
101
44
44
104
FIG. 1
100
102
104
101
108
FIG. 4
100
101
105
102
103
104
108
FIG. 3

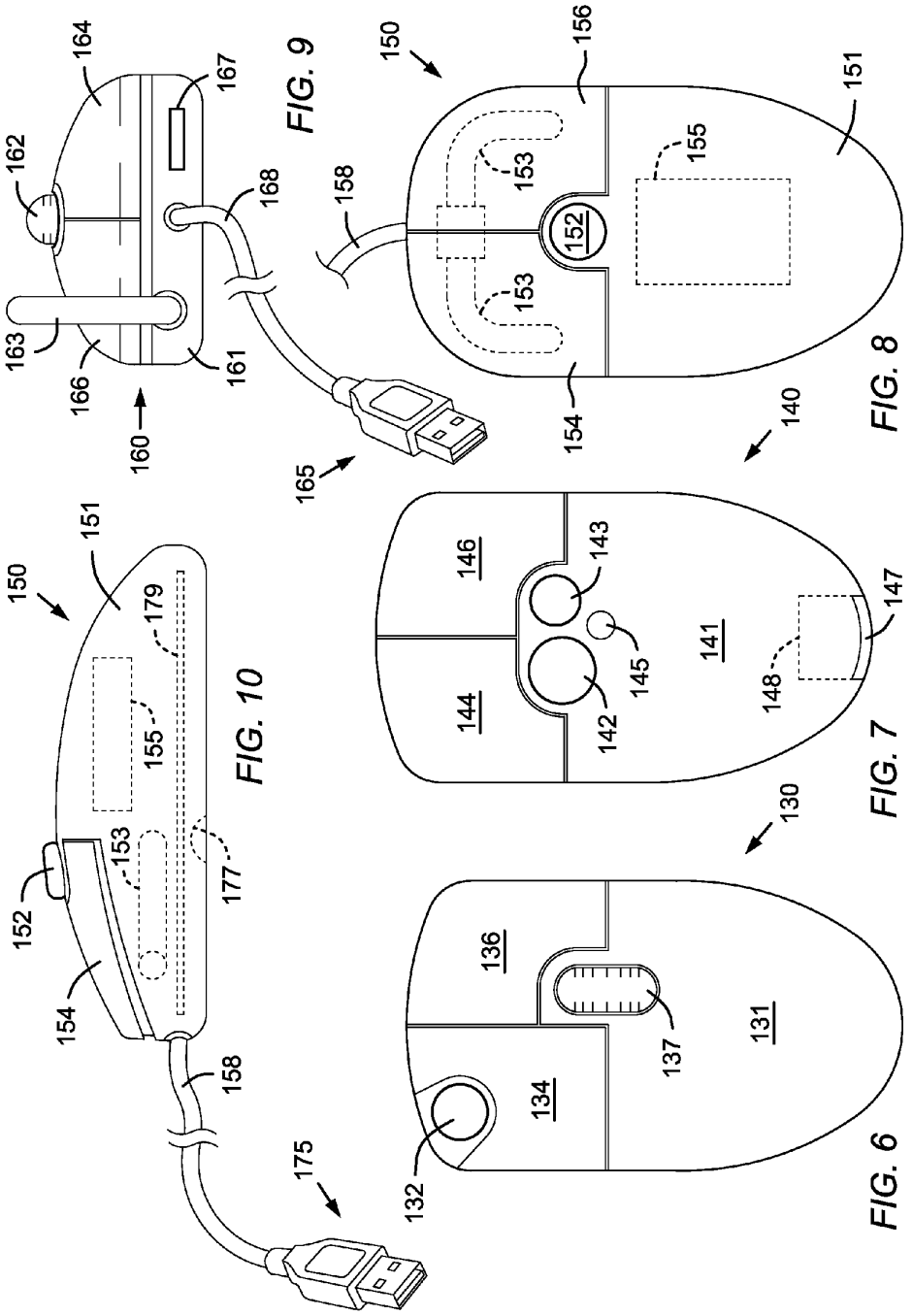
FIG. 9
FIG. 8
FIG. 7
FIG. 6
FIG. 10
150
151
152
153
154
155
156
158
160
161
162
163
164
165
166
167
168
130
131
132
134
136
137
140
141
142
143
144
145
146
147
148
175
177
179

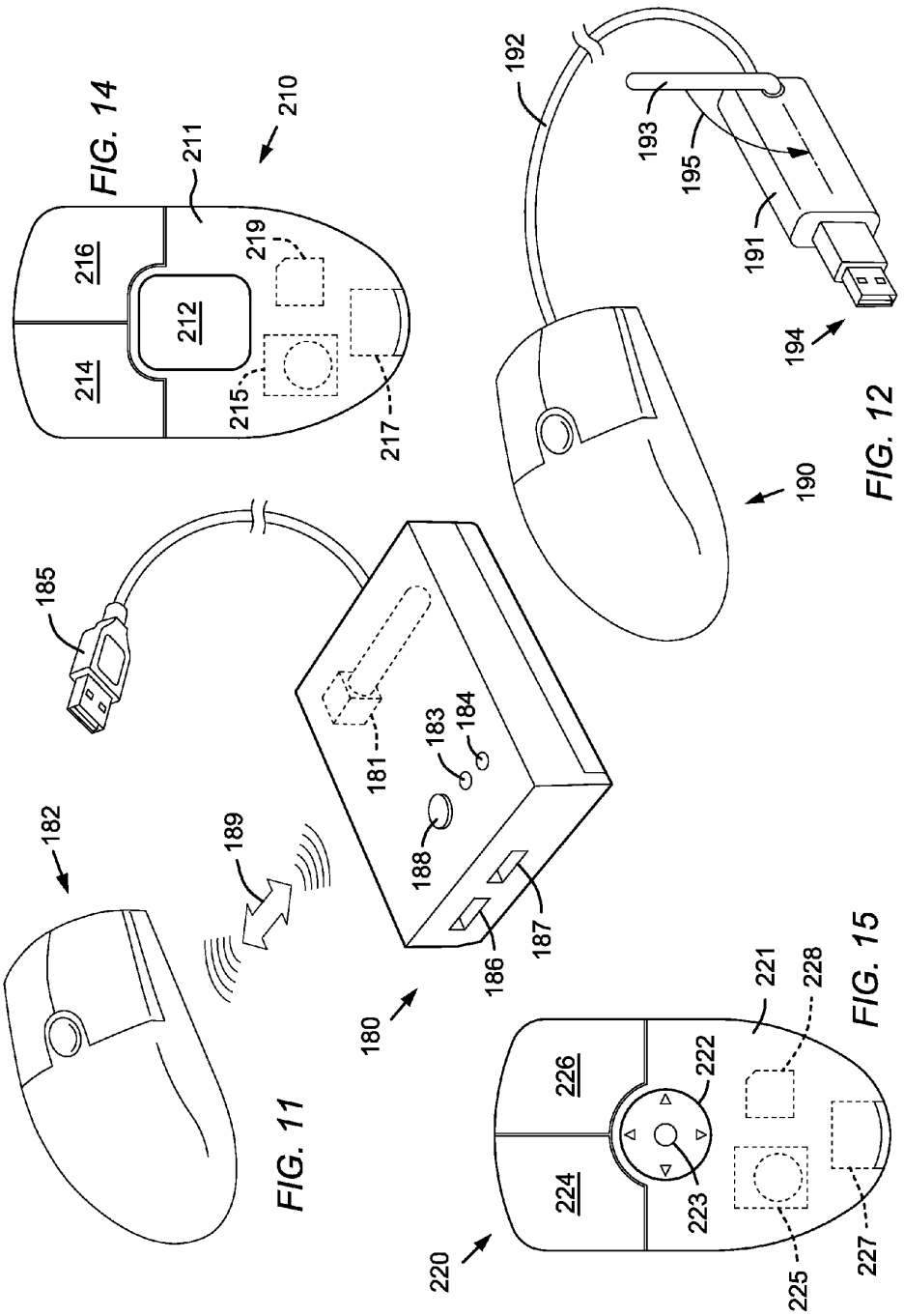
FIG. 14
210
211
212
214
216
215
217
219
FIG. 12
190
191
192
193
194
195
FIG. 11
180
181
182
183
184
185
186
187
188
189
FIG. 15
220
221
222
223
224
225
226
227
228

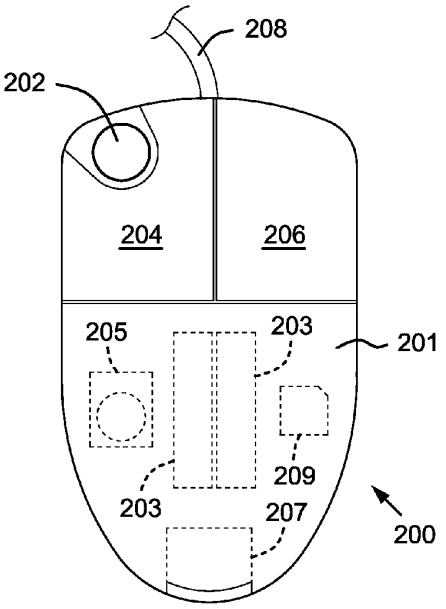

FIG. 13

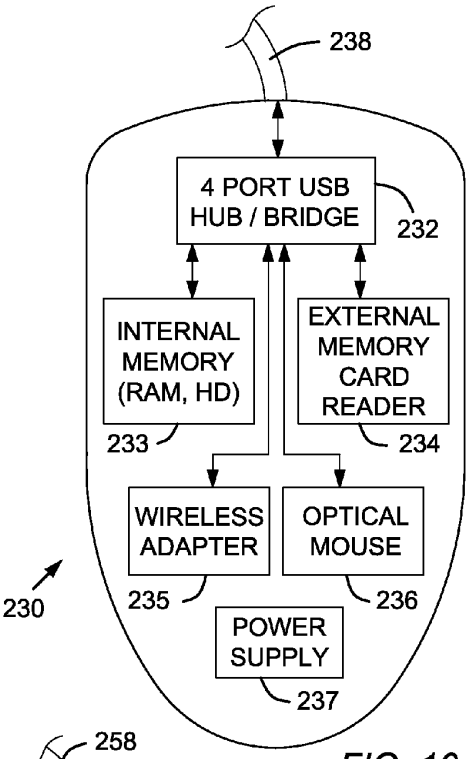

FIG. 16

FIG. 17

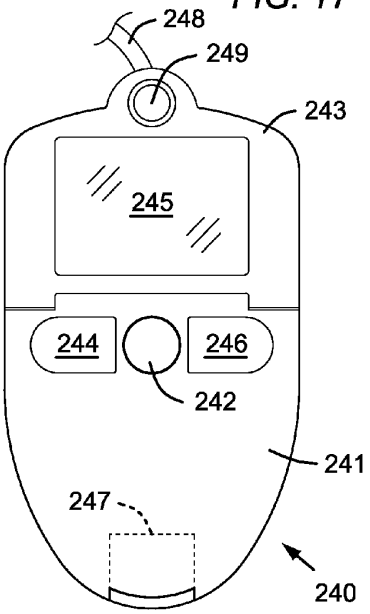

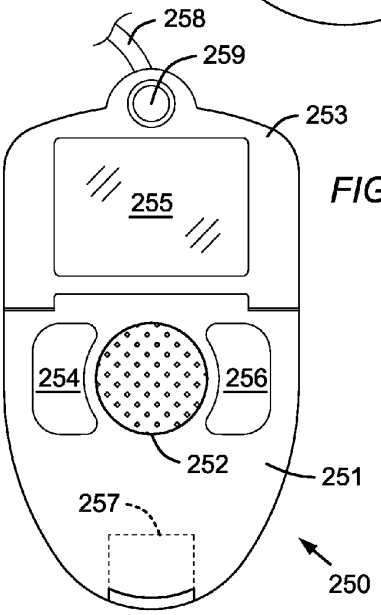

FIG. 18

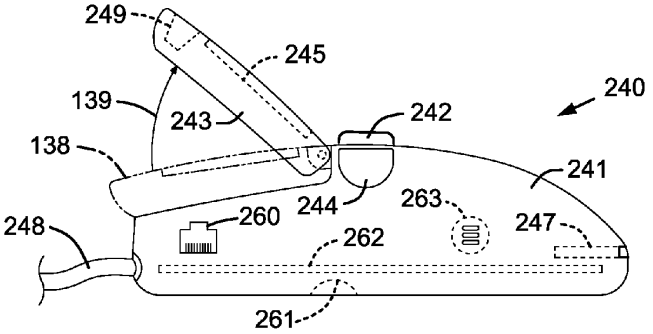

FIG. 19

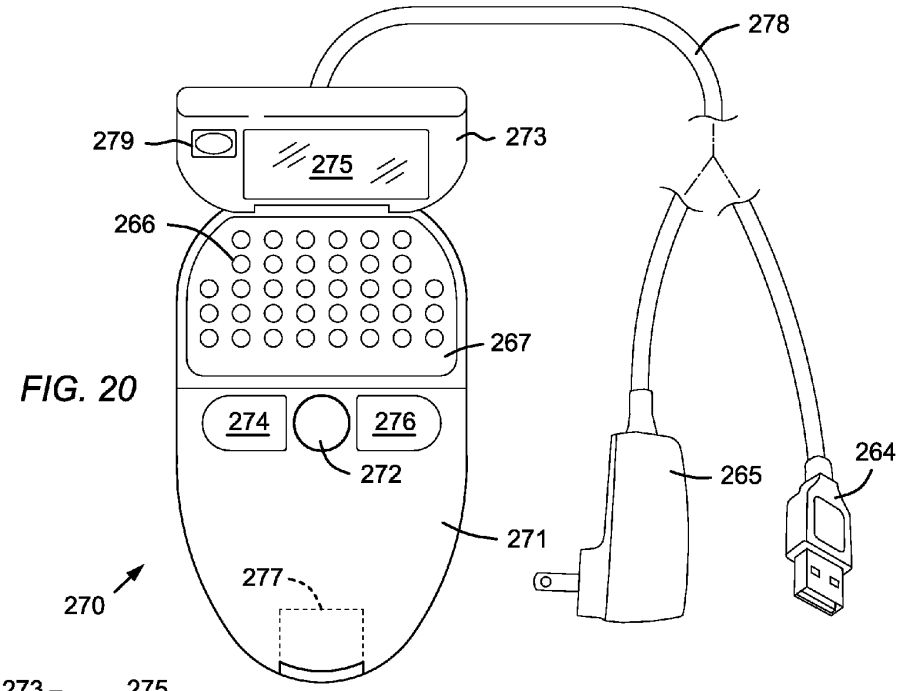

FIG. 20

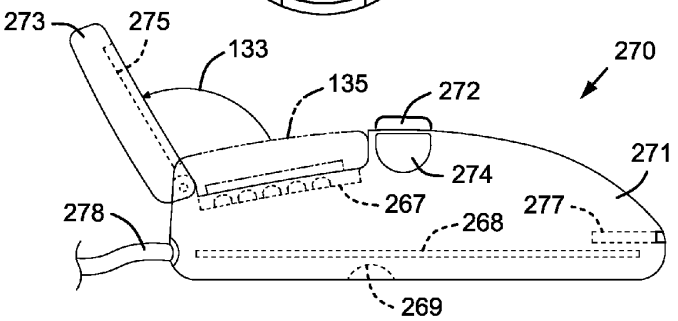

FIG. 21

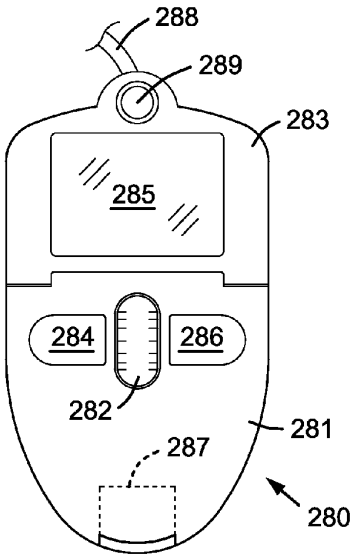

FIG. 22

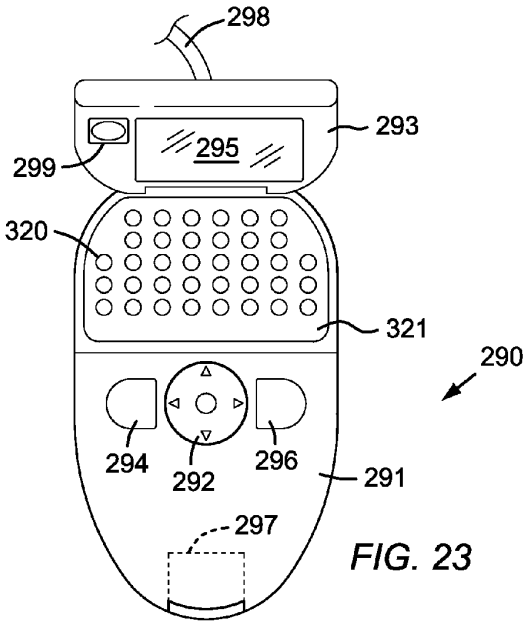

FIG. 23

FIG. 24

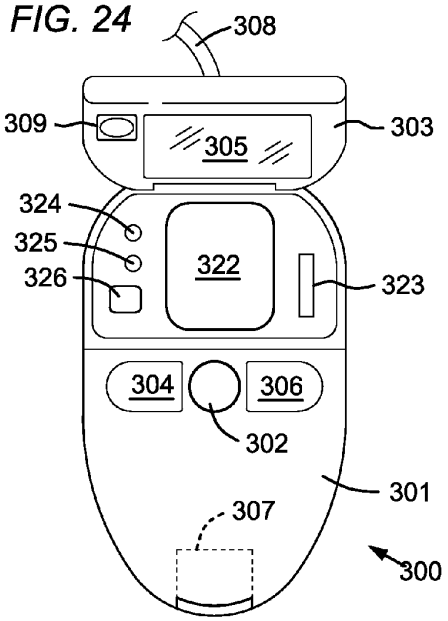

FIG. 25

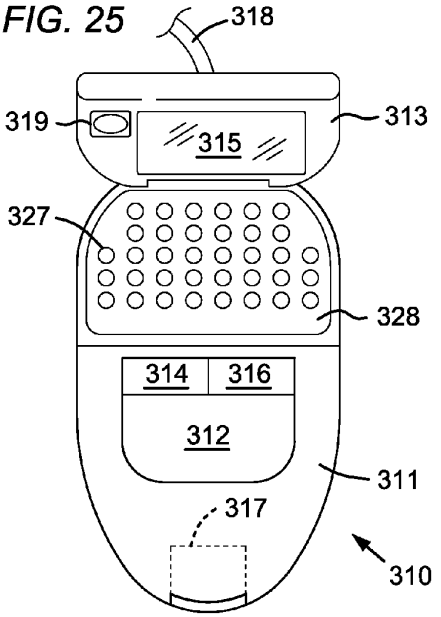

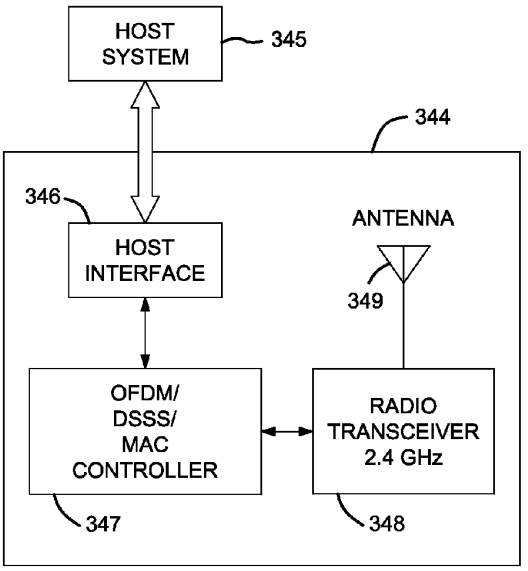

FIG. 27

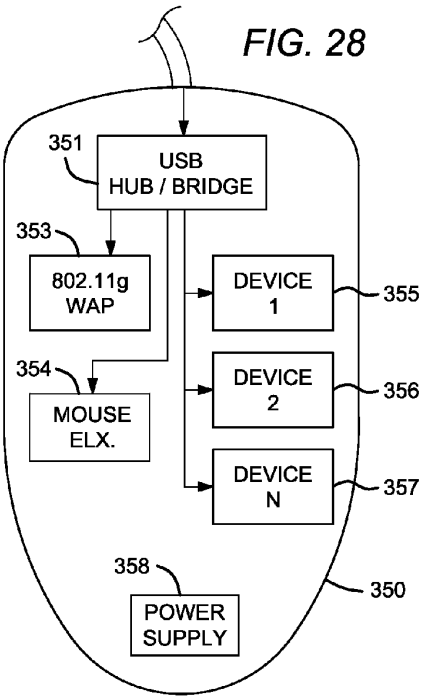

FIG. 28

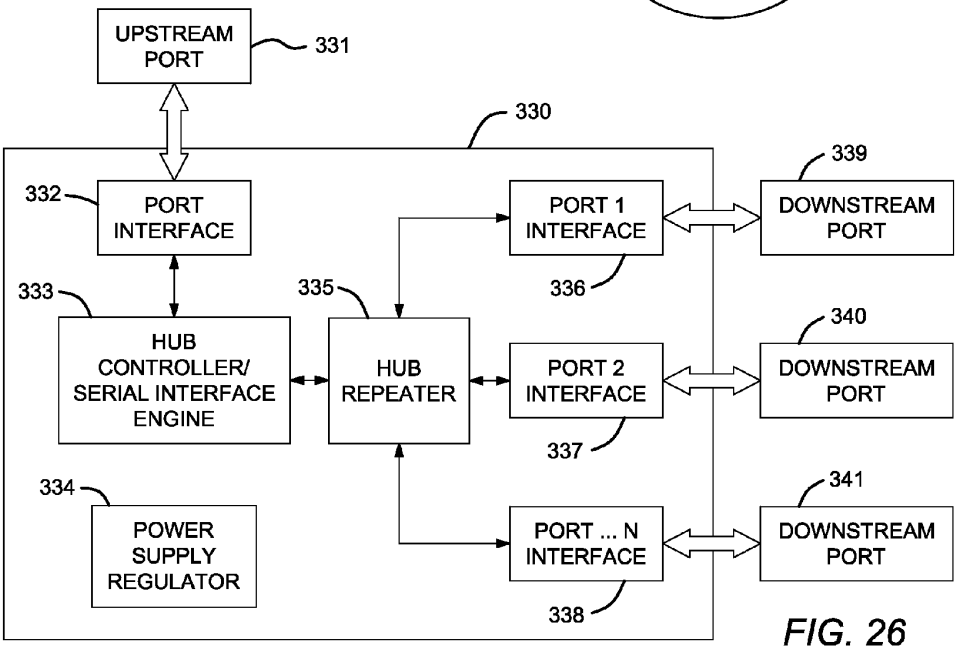

FIG. 26

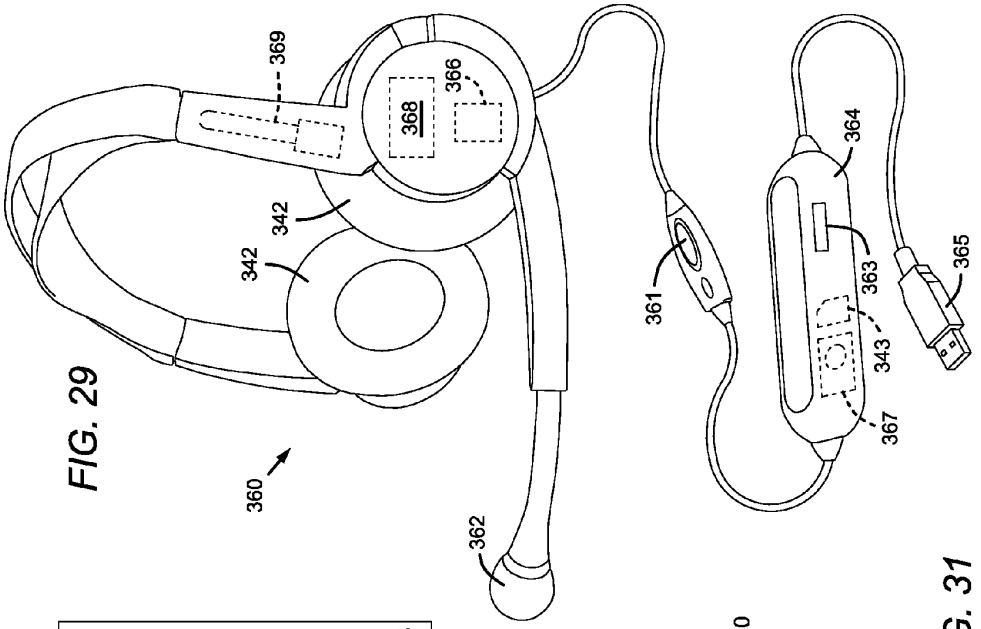

FIG. 29

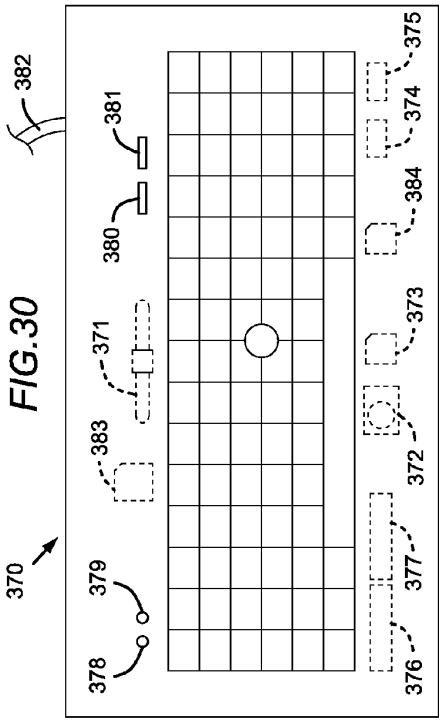

FIG.30

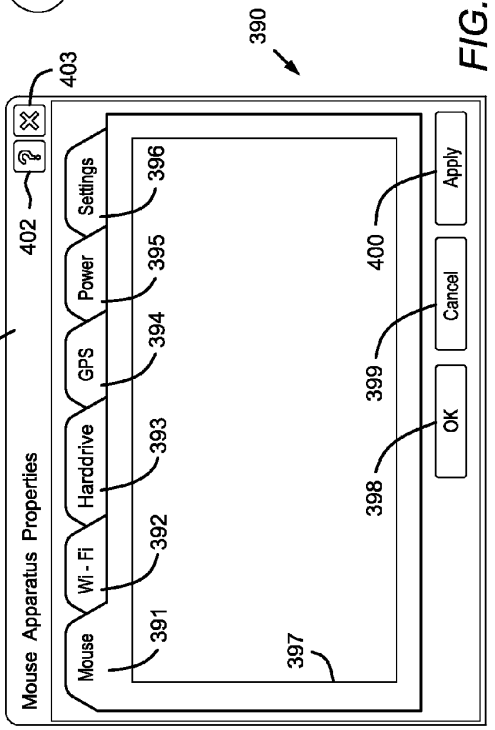

FIG. 31

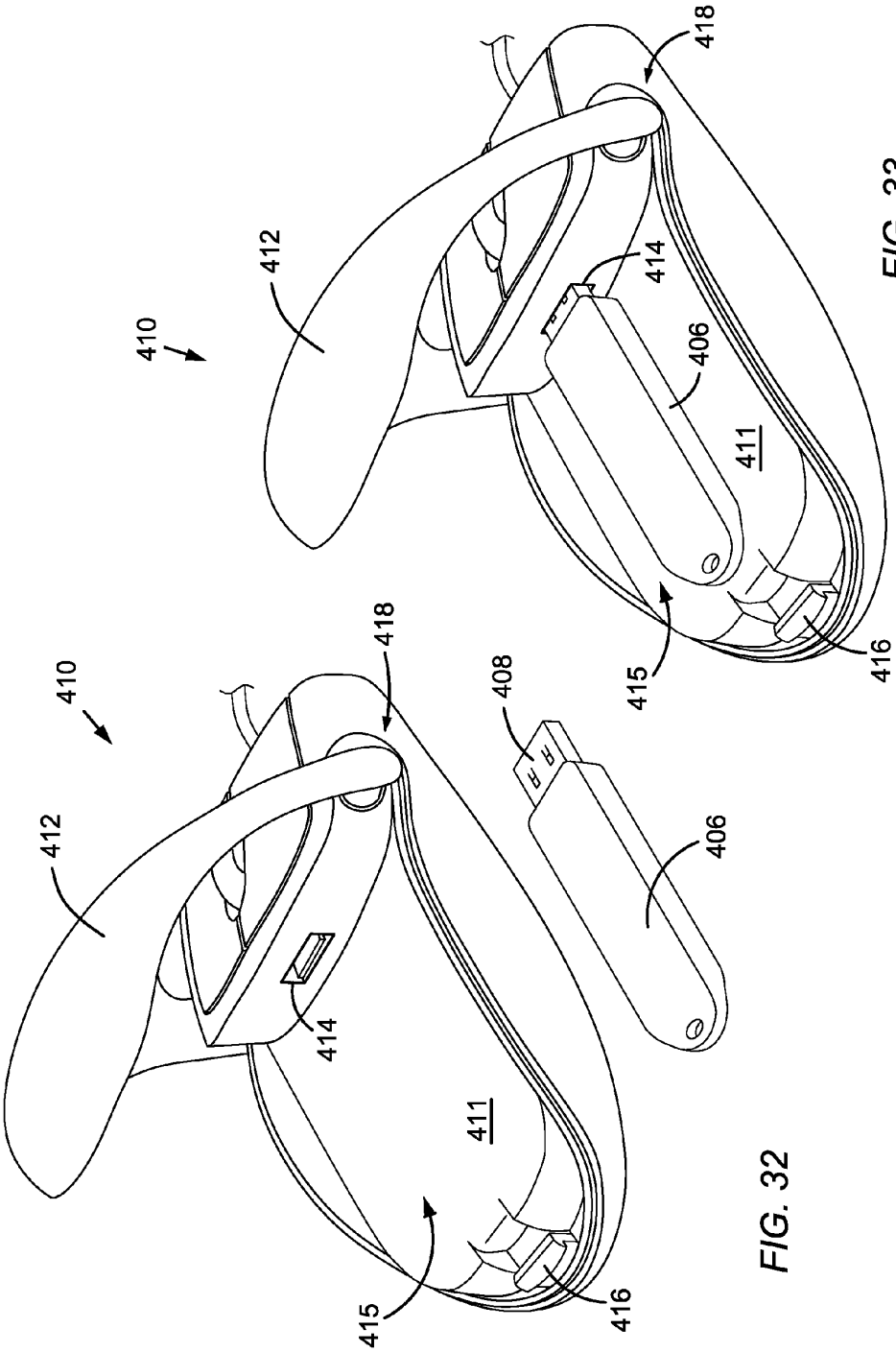

FIG. 32

FIG. 33

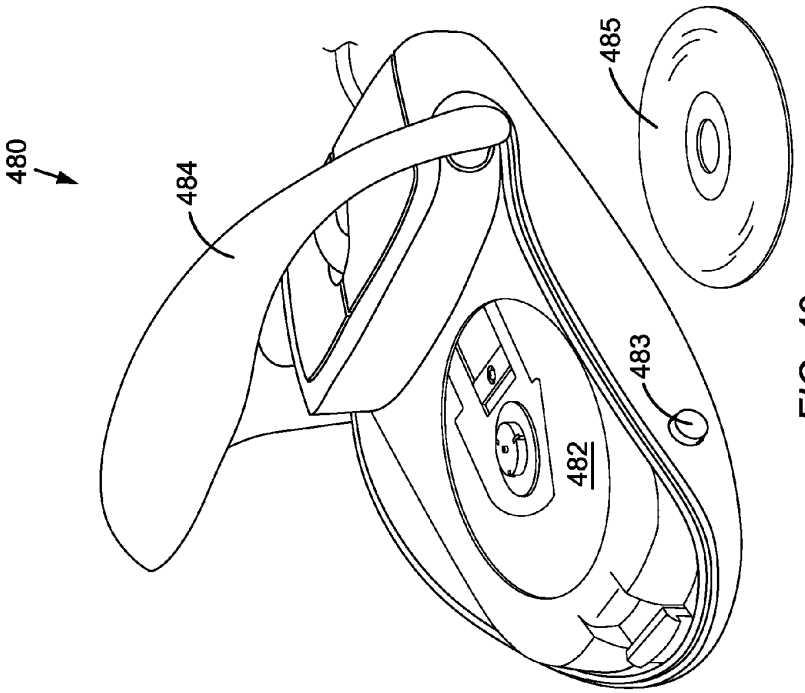

FIG. 43

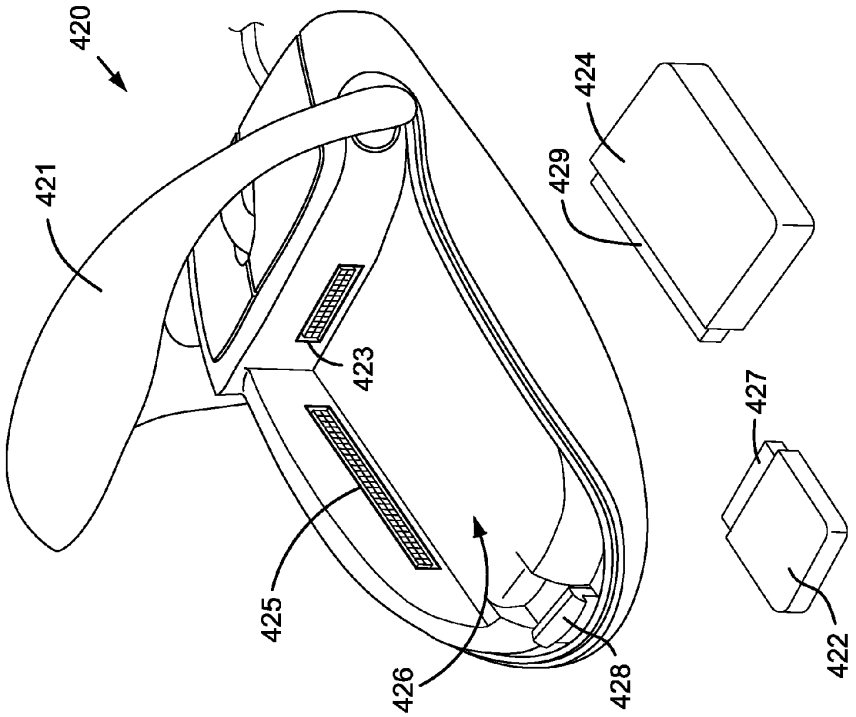

FIG. 34

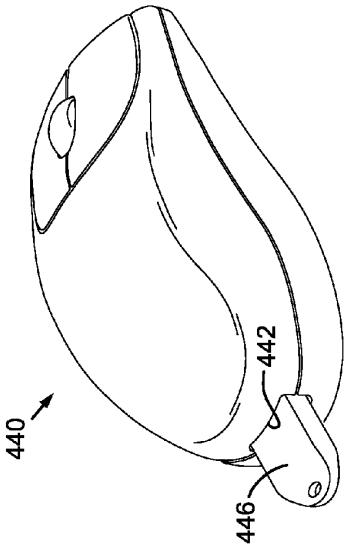

FIG. 38

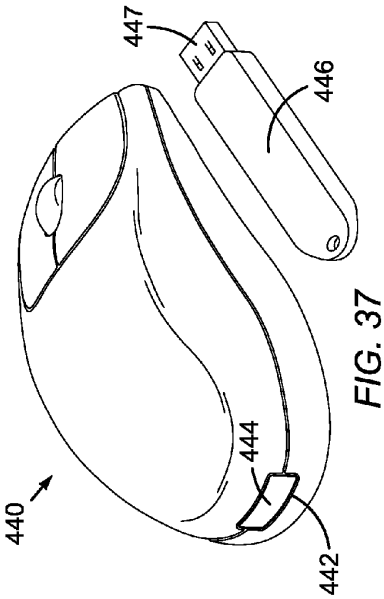

FIG. 37

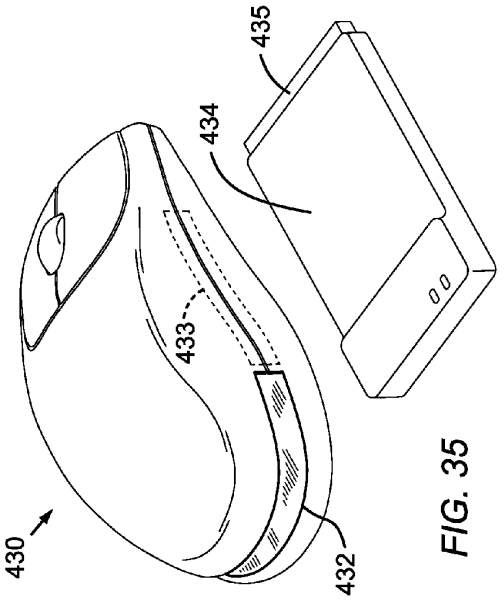

FIG. 35

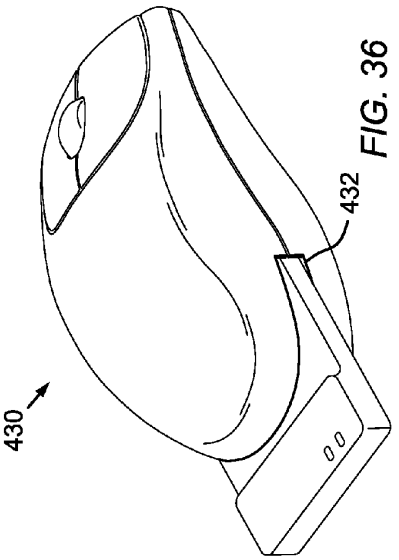

FIG. 36

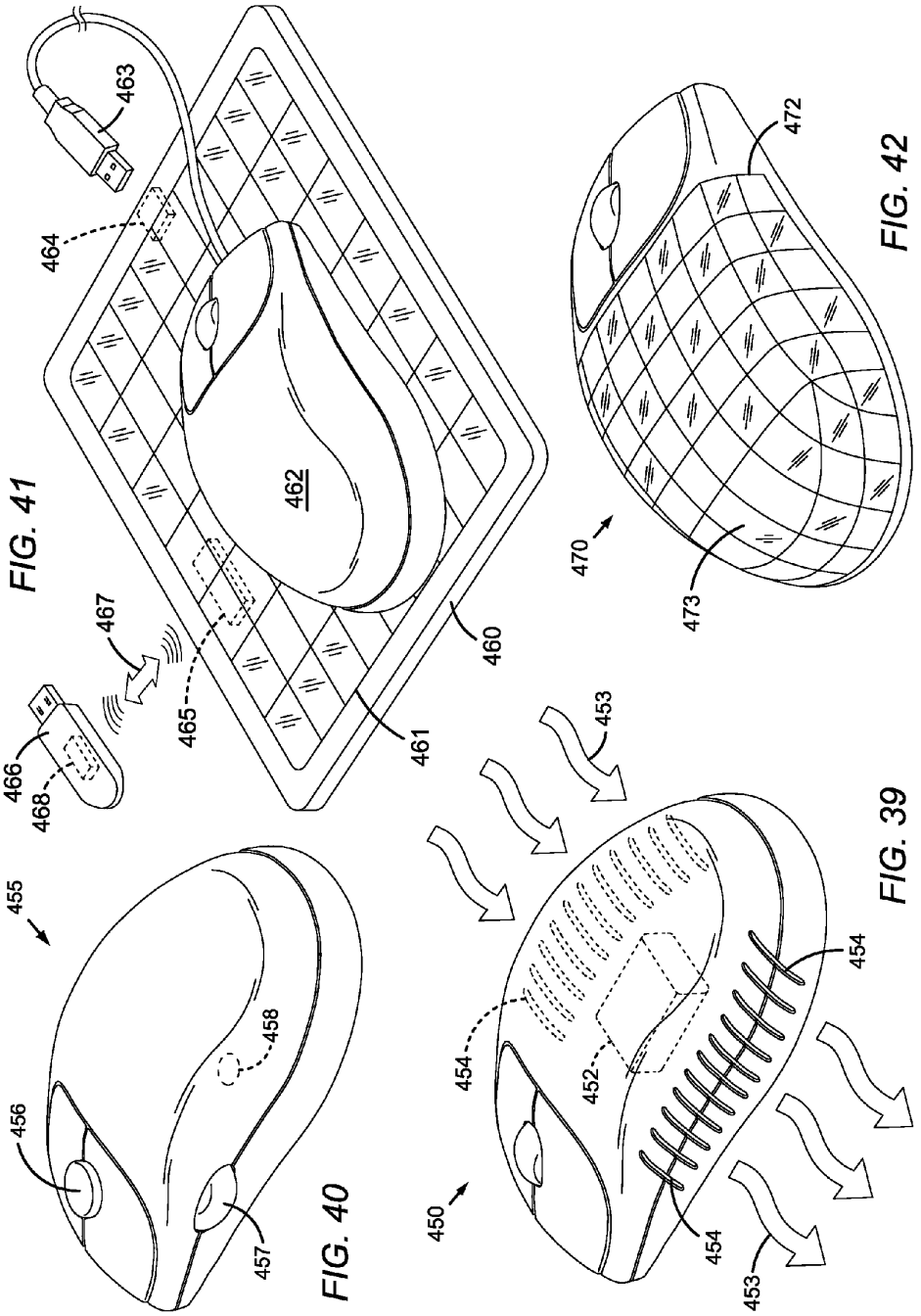

FIG. 41

FIG. 40

FIG. 39

FIG. 42

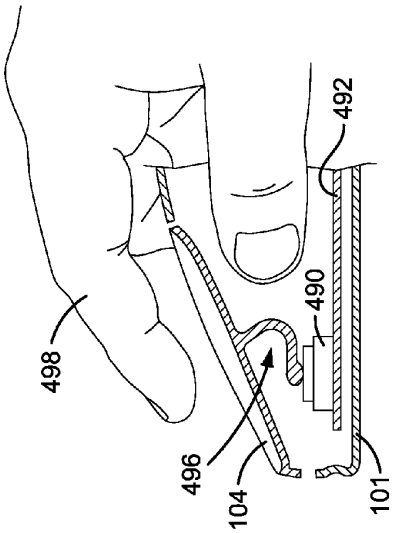

FIG. 44B

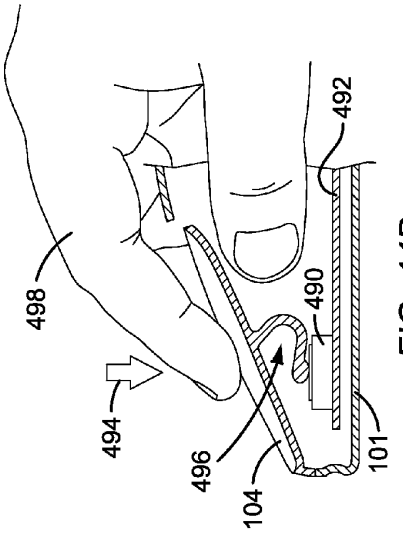

FIG. 44A

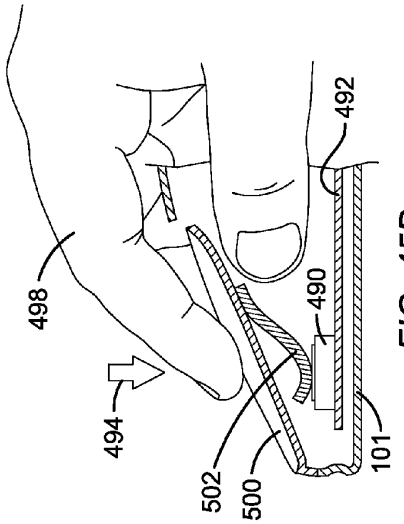

FIG. 45B

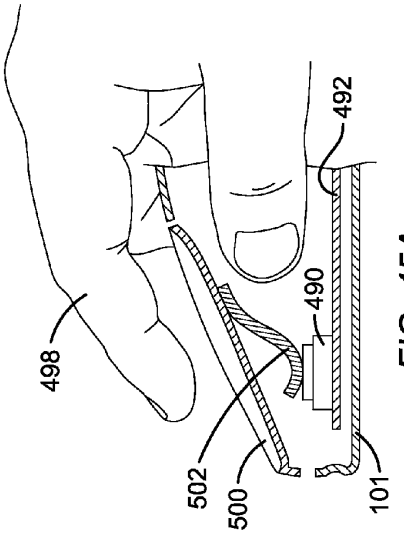

FIG. 45A

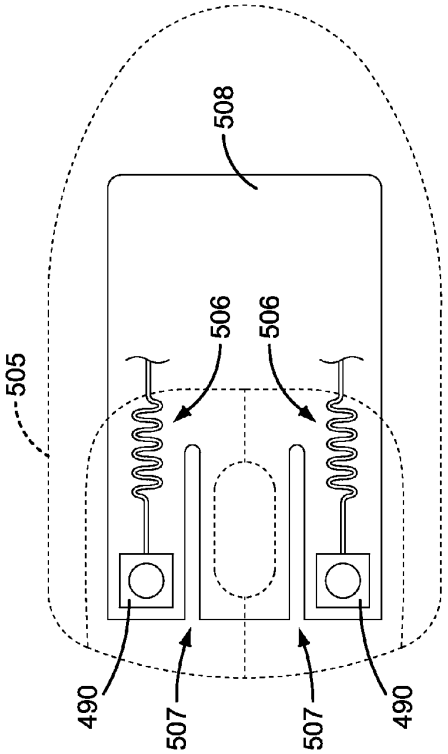

FIG. 57

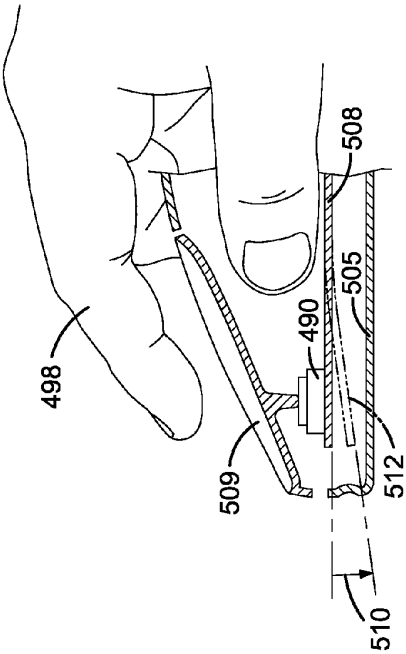

FIG. 58

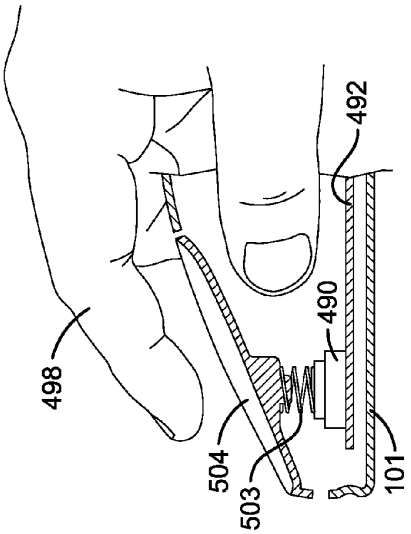

FIG. 46A

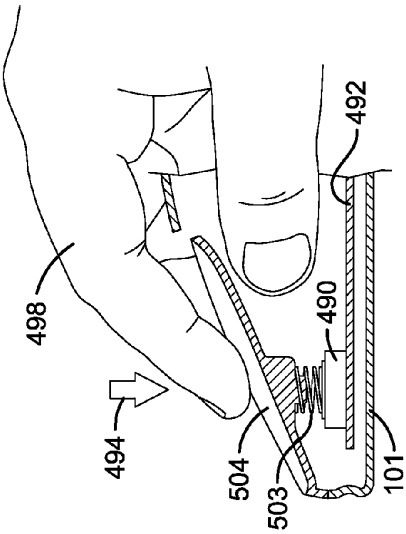

FIG. 46B

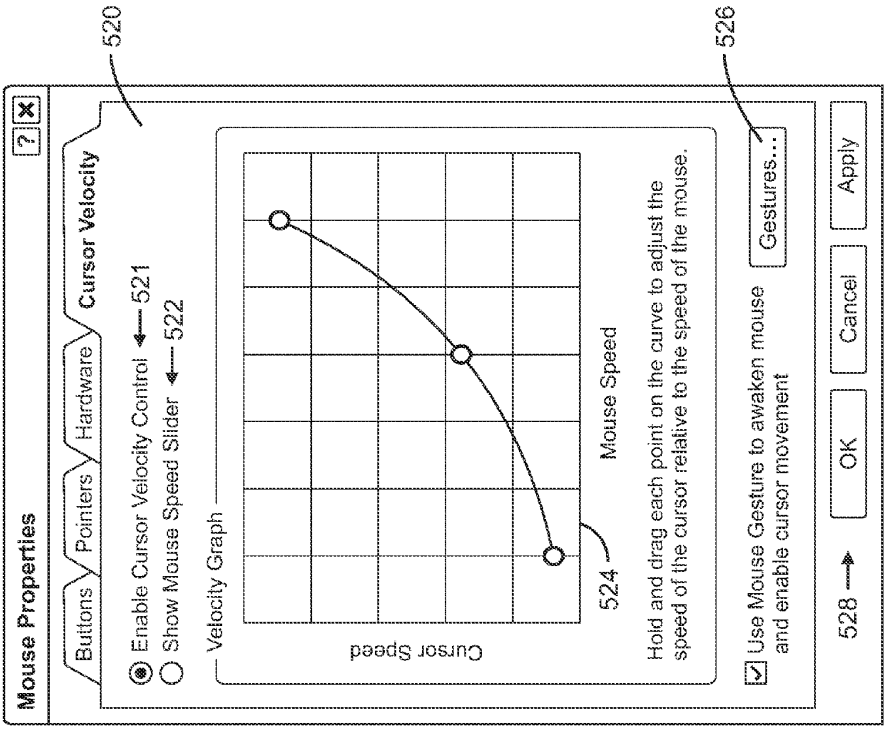
Mouse Properties
Buttons
Pointers
Hardware
Cursor Velocity
Enable Cursor Velocity Control
Show Mouse Speed Slider
521
522
520
Velocity Graph
Cursor Speed
Mouse Speed
524
Hold and drag each point on the curve to adjust the speed of the cursor relative to the speed of the mouse.
526
Gestures...
Use Mouse Gesture to awaken mouse and enable cursor movement
528
OK
Cancel
Apply

FIG. 47

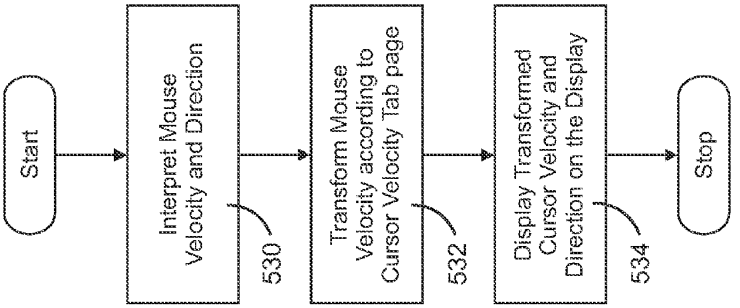
Start
Interpret Mouse Velocity and Direction
530
Transform Mouse Velocity according to Cursor Velocity Tab page
532
Display Transformed Cursor Velocity and Direction on the Display
534
Stop

FIG. 48

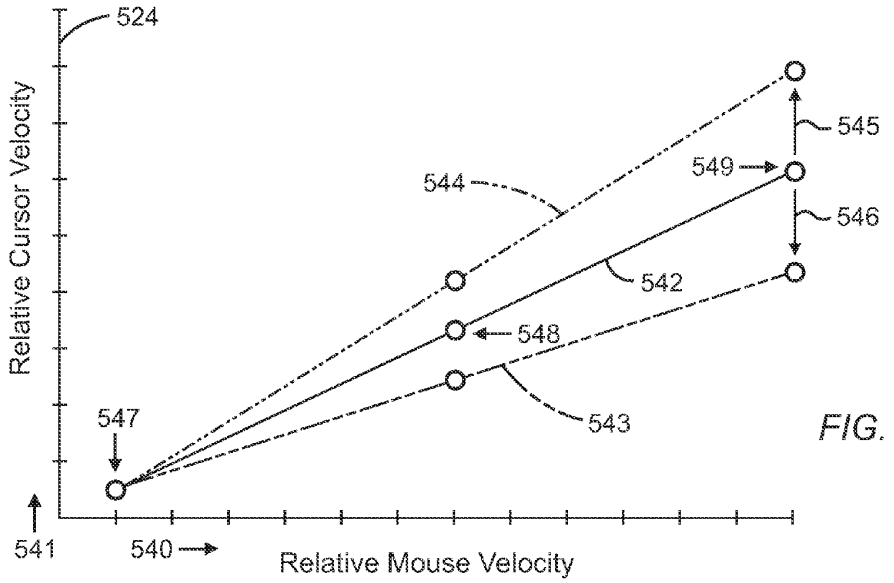
524
Relative Cursor Velocity
545
549
544
546
542
548
547
543
541
540
Relative Mouse Velocity

FIG. 49

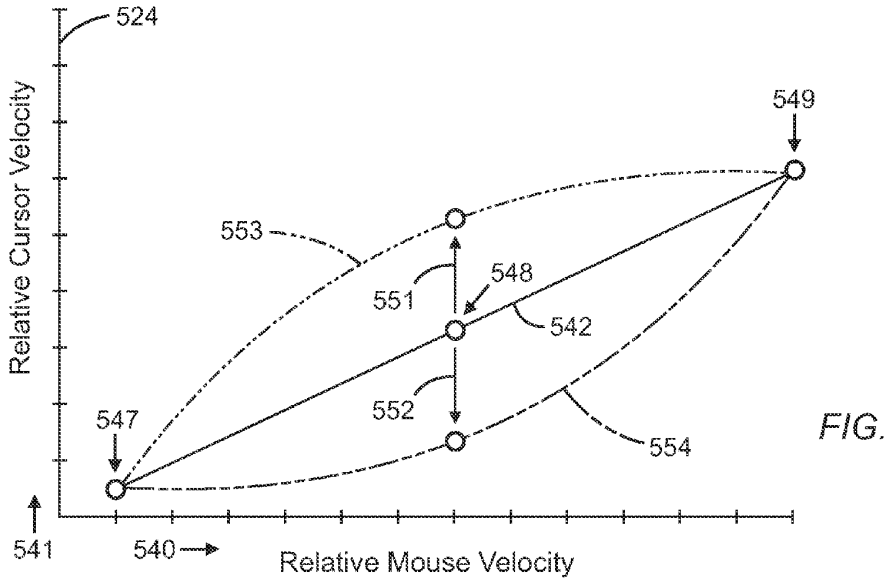
524
Relative Cursor Velocity
549
553
548
551
542
552
547
554
541
540
Relative Mouse Velocity

FIG. 50

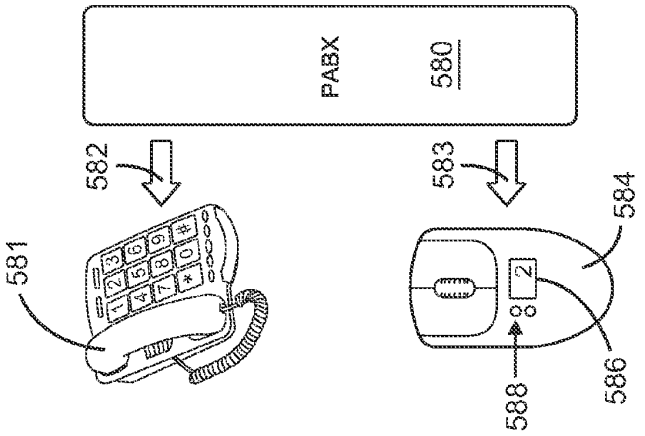
PABX
580
581
582
583
584
586
588

FIG. 52

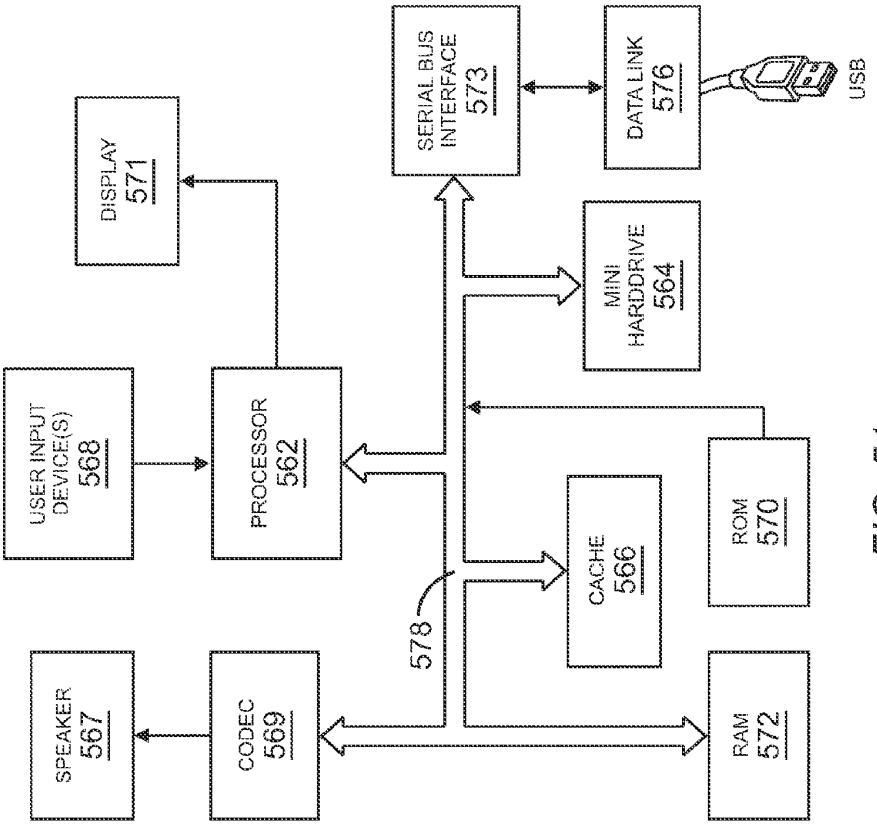
USER INPUT DEVICE(S) 568
DISPLAY 571
PROCESSOR 562
SERIAL BUS INTERFACE 573
DATA LINK 576
USB
MINI HARDDRIVE 564
SPEAKER 567
CODEC 569
578
CACHE 566
ROM 570
RAM 572

FIG. 51

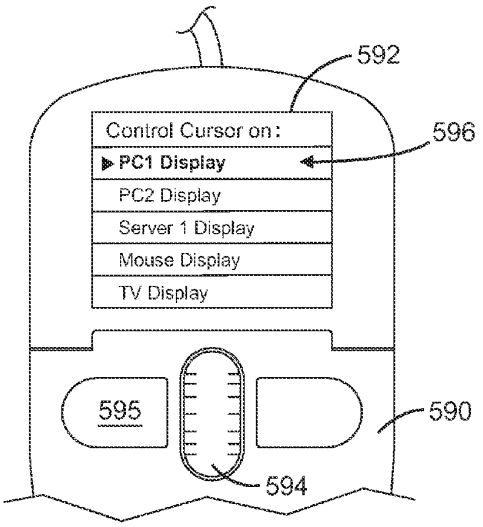

FIG. 53a

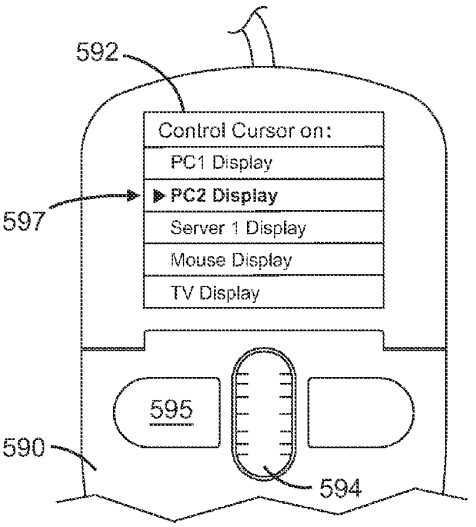

FIG. 53b

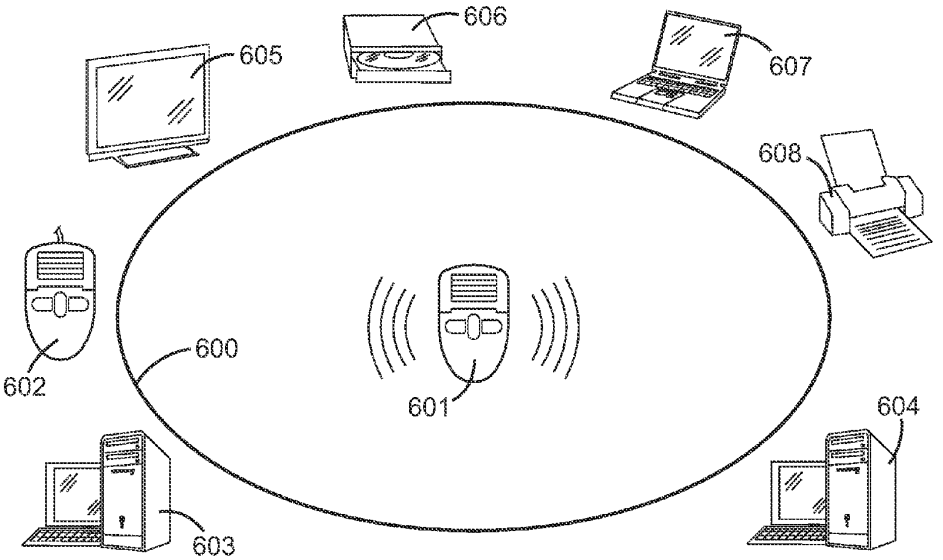

FIG. 54

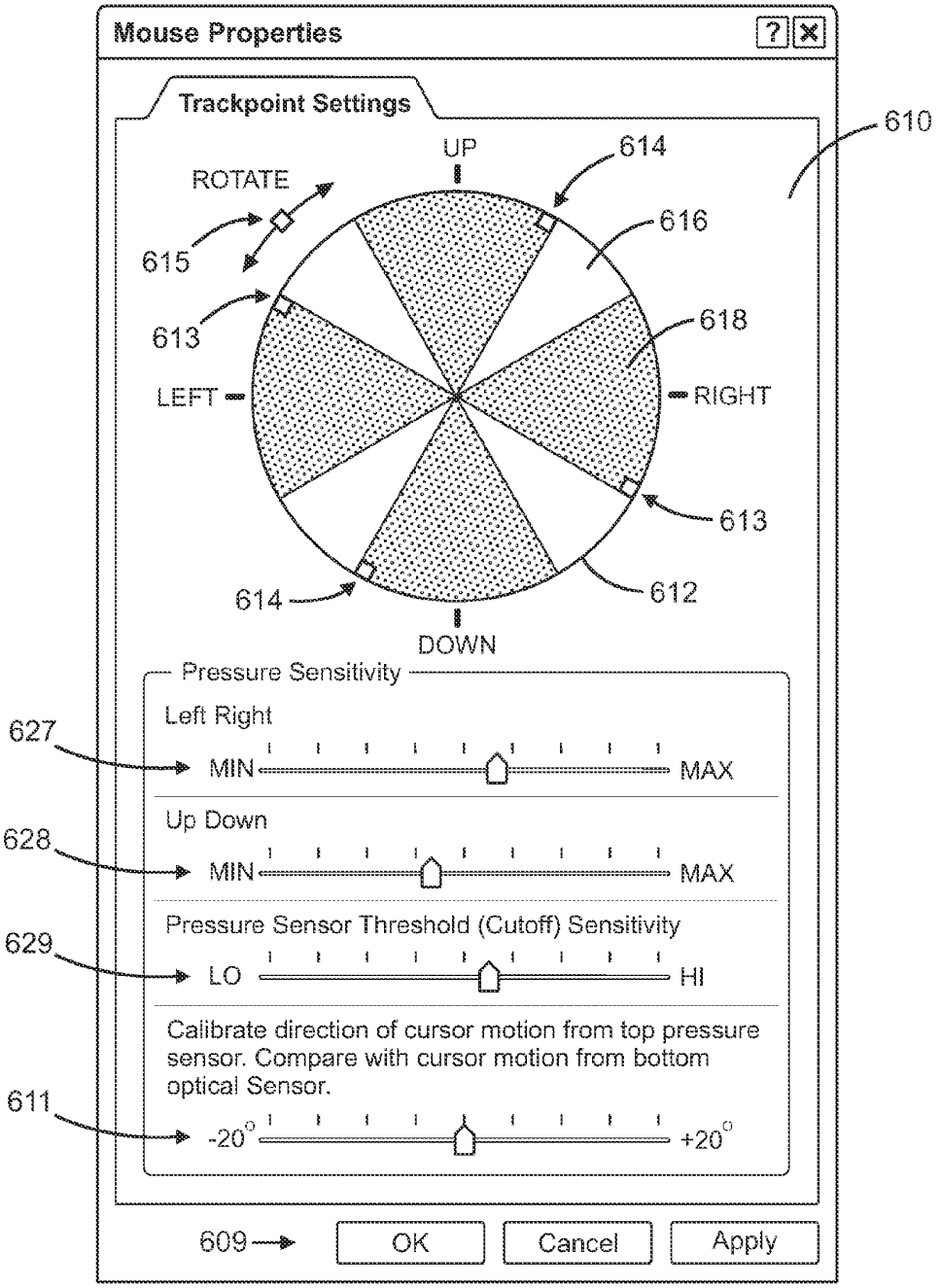
Mouse Properties
Trackpoint Settings
610
UP
614
ROTATE
616
615
613
618
LEFT
RIGHT
613
614
612
DOWN
Pressure Sensitivity
Left Right
627
MIN
MAX
Up Down
628
MIN
MAX
Pressure Sensor Threshold (Cutoff) Sensitivity
629
LO
HI
Calibrate direction of cursor motion from top pressure sensor. Compare with cursor motion from bottom optical Sensor.
611
-20°
+20°
609
OK
Cancel
Apply

FIG. 55

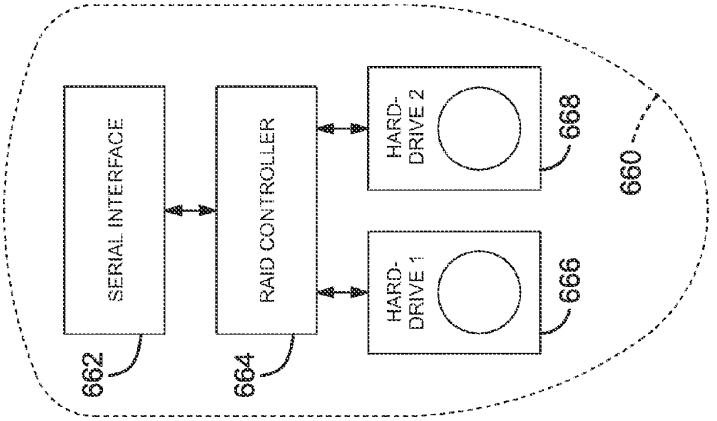
SERIAL INTERFACE
RAID CONTROLLER
HARD-DRIVE 1
HARD-DRIVE 2
662
664
666
668
660

FIG. 60

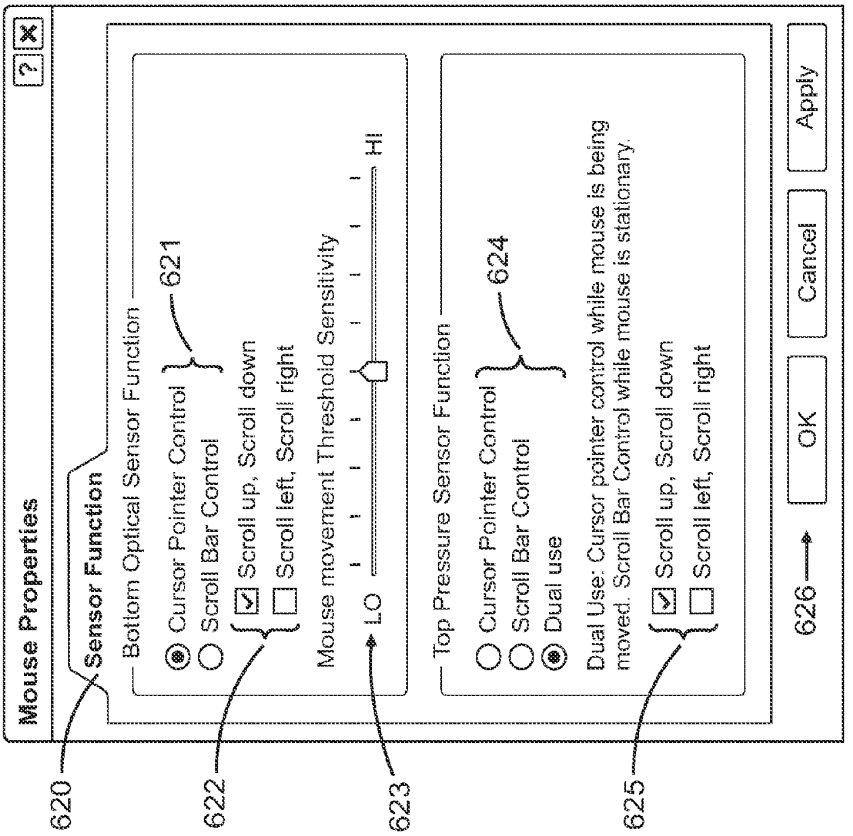
Mouse Properties
Sensor Function
Bottom Optical Sensor Function
Cursor Pointer Control
Scroll Bar Control
Scroll up, Scroll down
Scroll left, Scroll right
Mouse movement Threshold Sensitivity
LO
HI
Top Pressure Sensor Function
Cursor Pointer Control
Scroll Bar Control
Dual use
Dual Use: Cursor pointer control while mouse is being moved. Scroll Bar Control while mouse is stationary.
Scroll up, Scroll down
Scroll left, Scroll right
OK
Cancel
Apply
620
621
622
623
624
625
626

FIG. 56

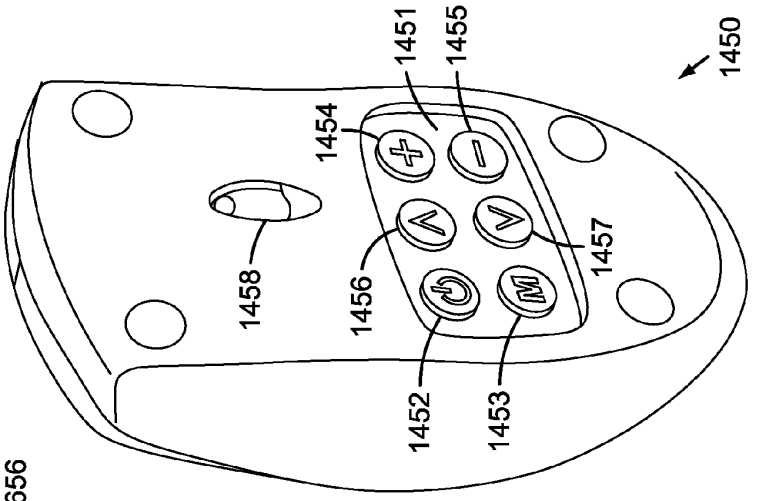

FIG. 66

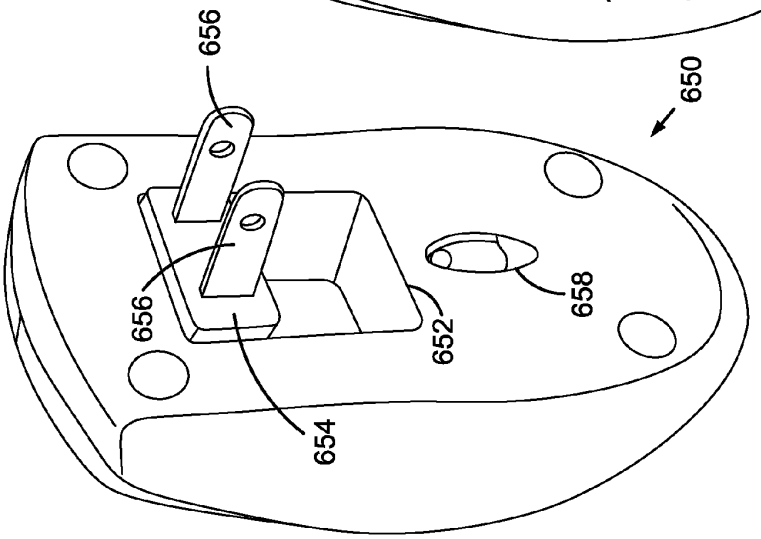

FIG. 59B

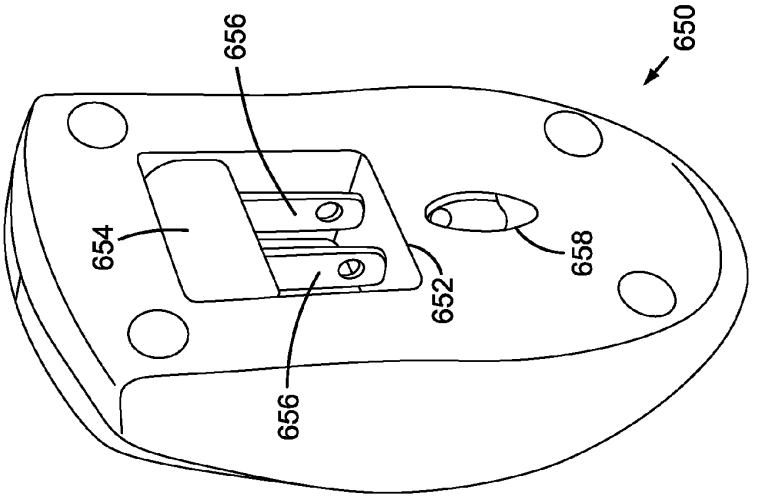

FIG. 59A

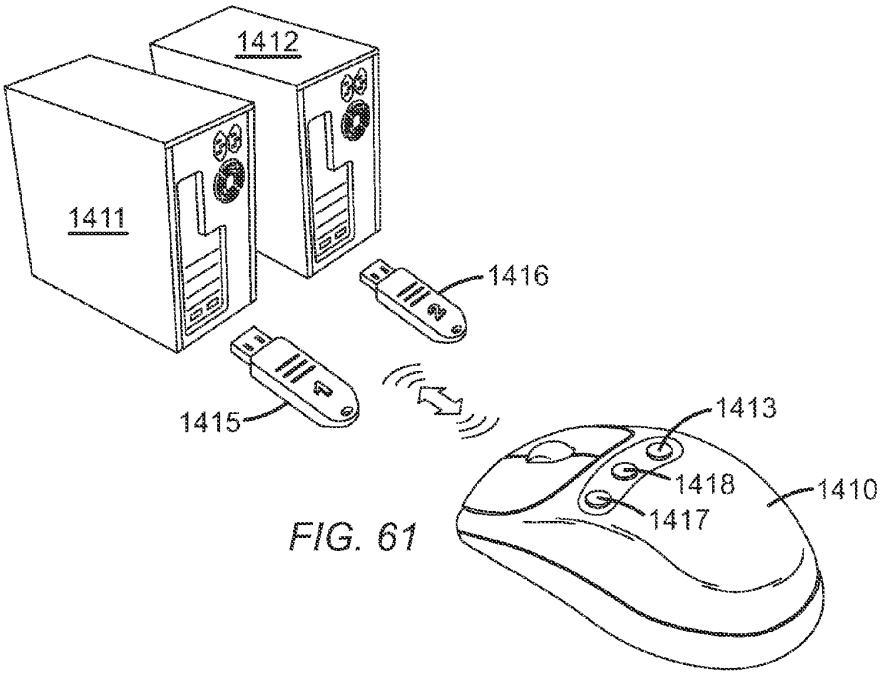
1412
1411
1416
1415
1413
1418
1417
1410

FIG. 61

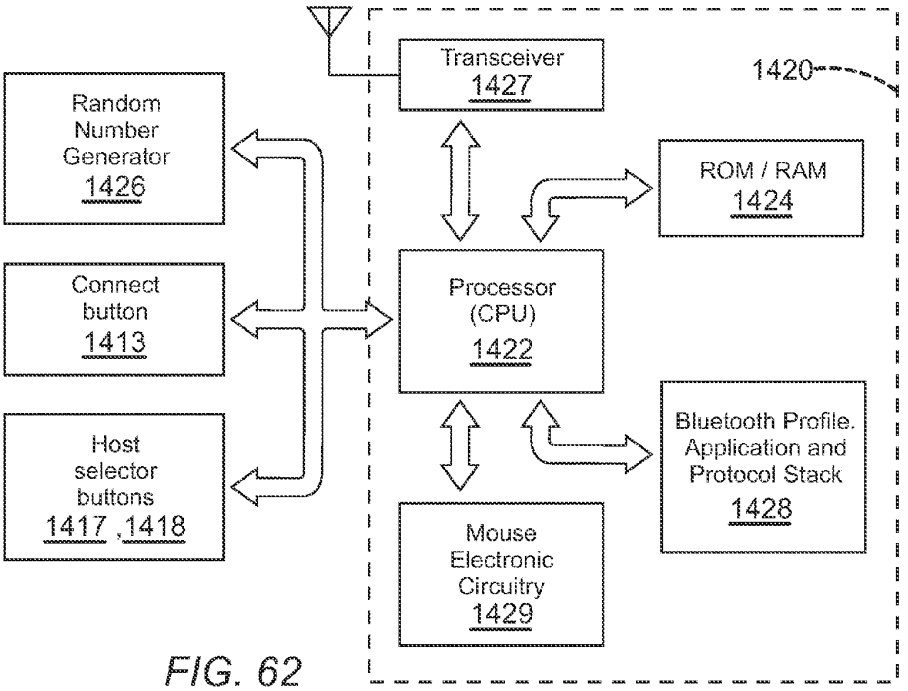
Transceiver
1427
1420
Random Number Generator
1426
ROM / RAM
1424
Connect button
1413
Processor (CPU)
1422
Host selector buttons
1417 ,1418
Bluetooth Profile. Application and Protocol Stack
1428
Mouse Electronic Circuitry
1429

FIG. 62

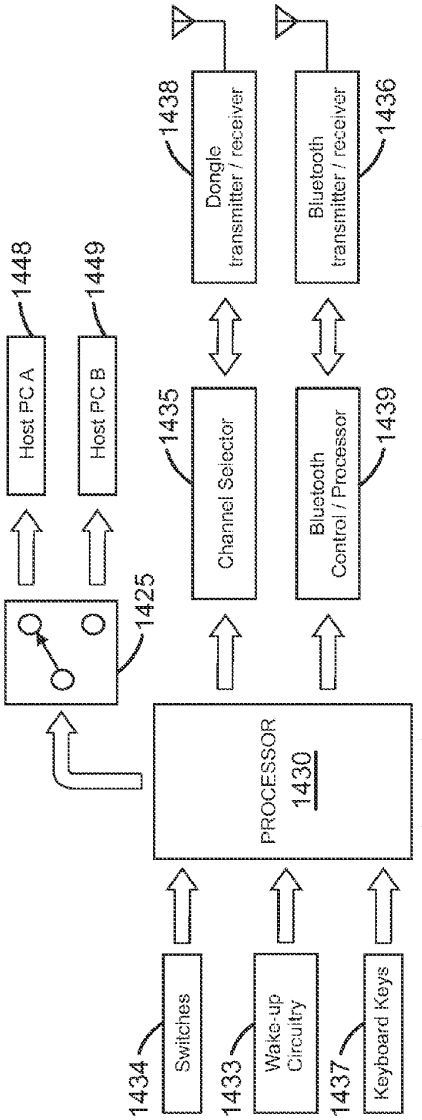

FIG. 63

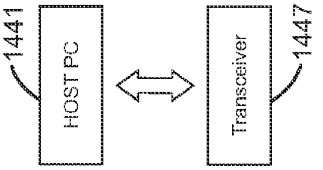

FIG. 65

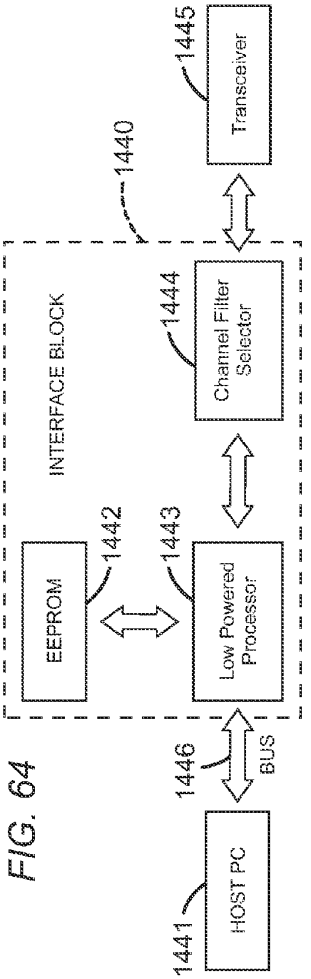

FIG. 64

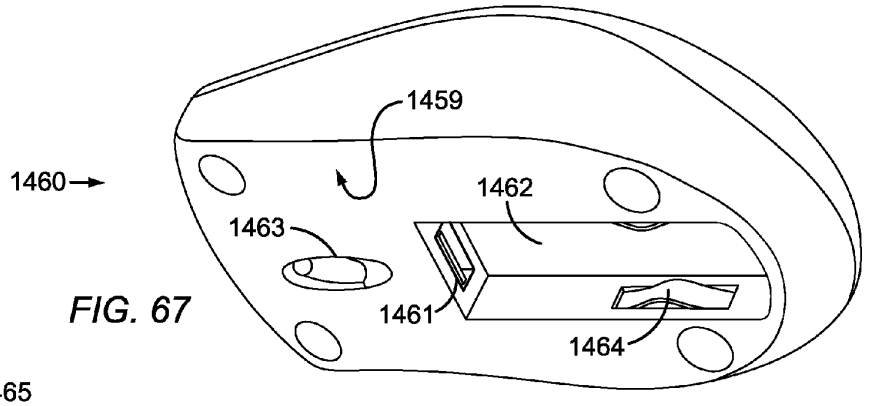

FIG. 67

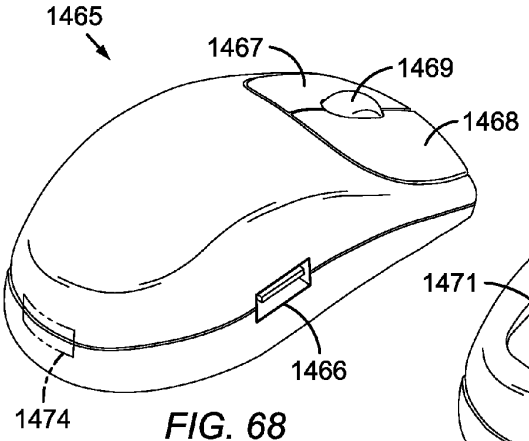

FIG. 68

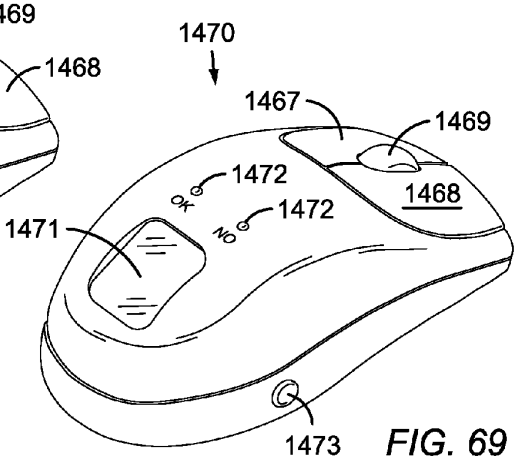

FIG. 69

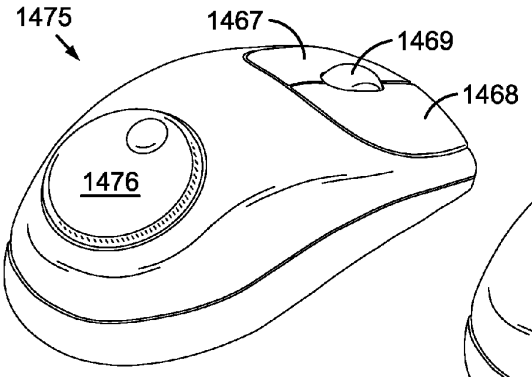

FIG. 70

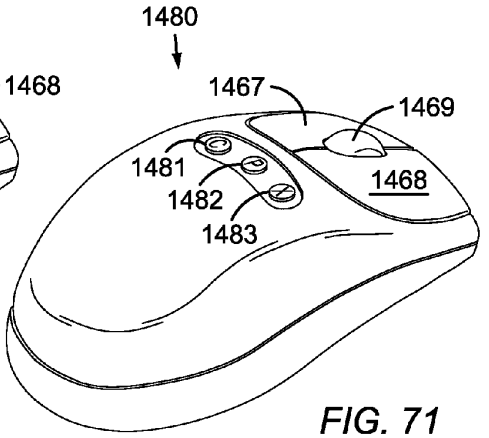

FIG. 71

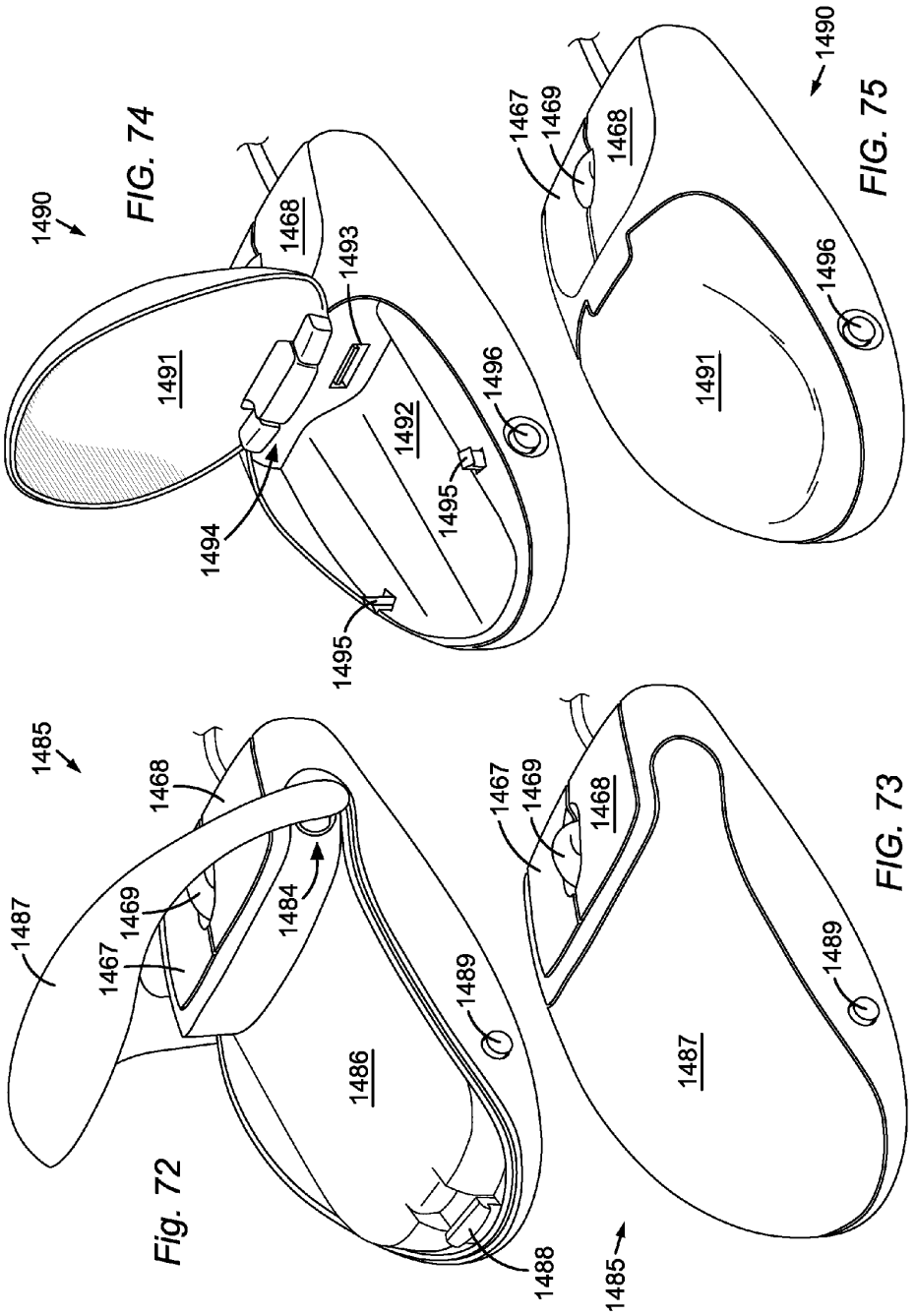

FIG. 74

FIG. 75

Fig. 72

FIG. 73

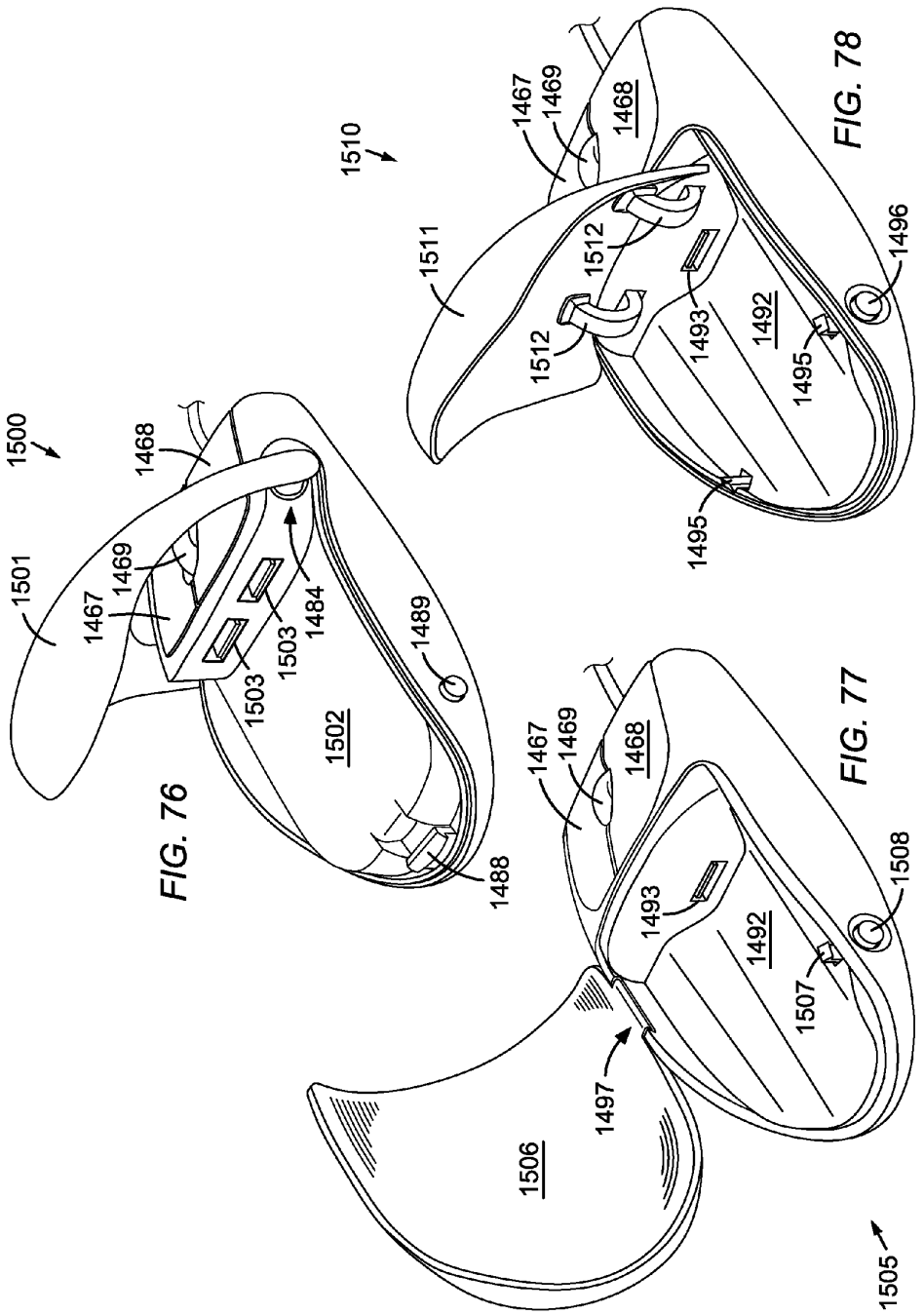

FIG. 76

FIG. 77

FIG. 78

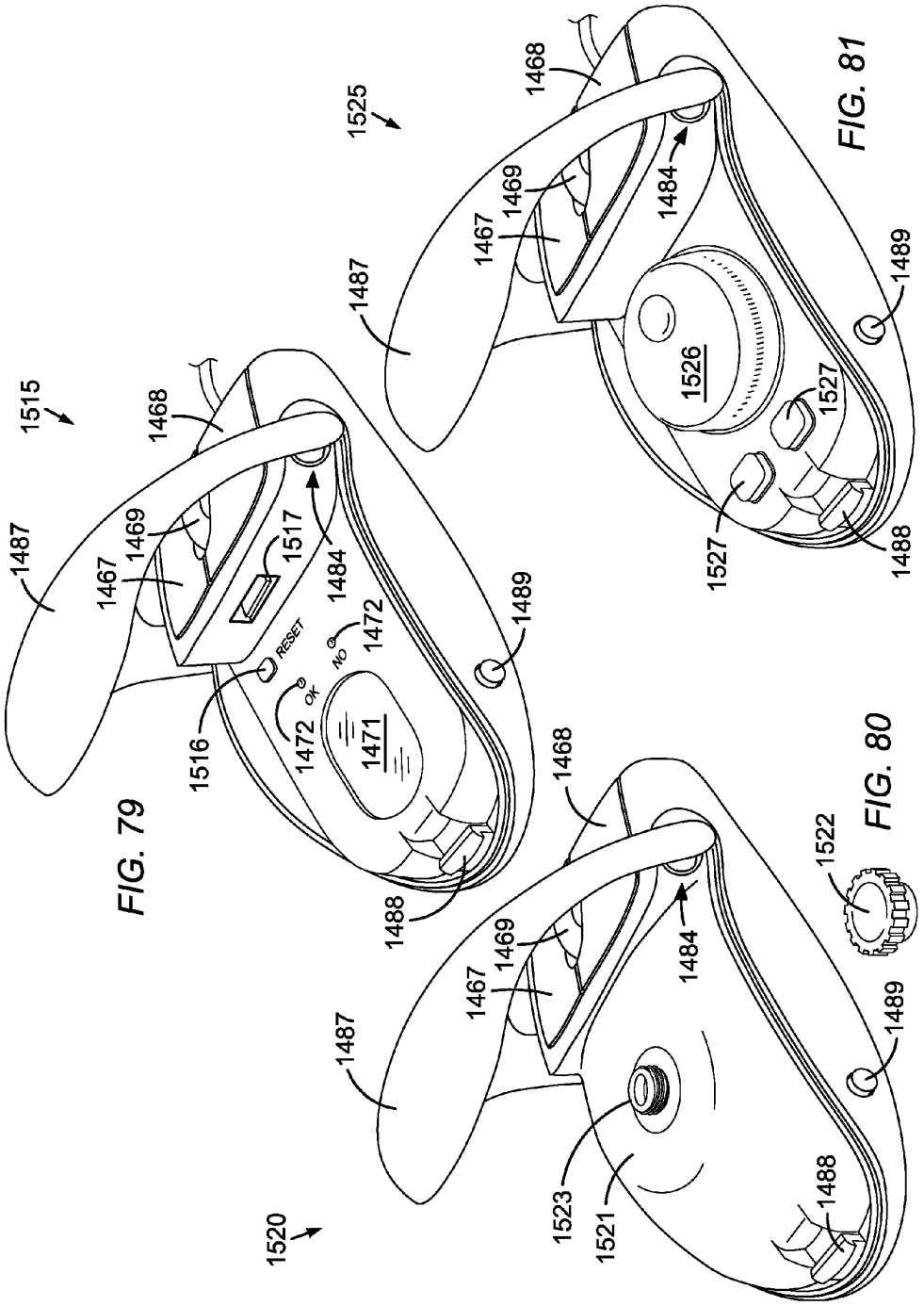

FIG. 79

FIG. 80

FIG. 81

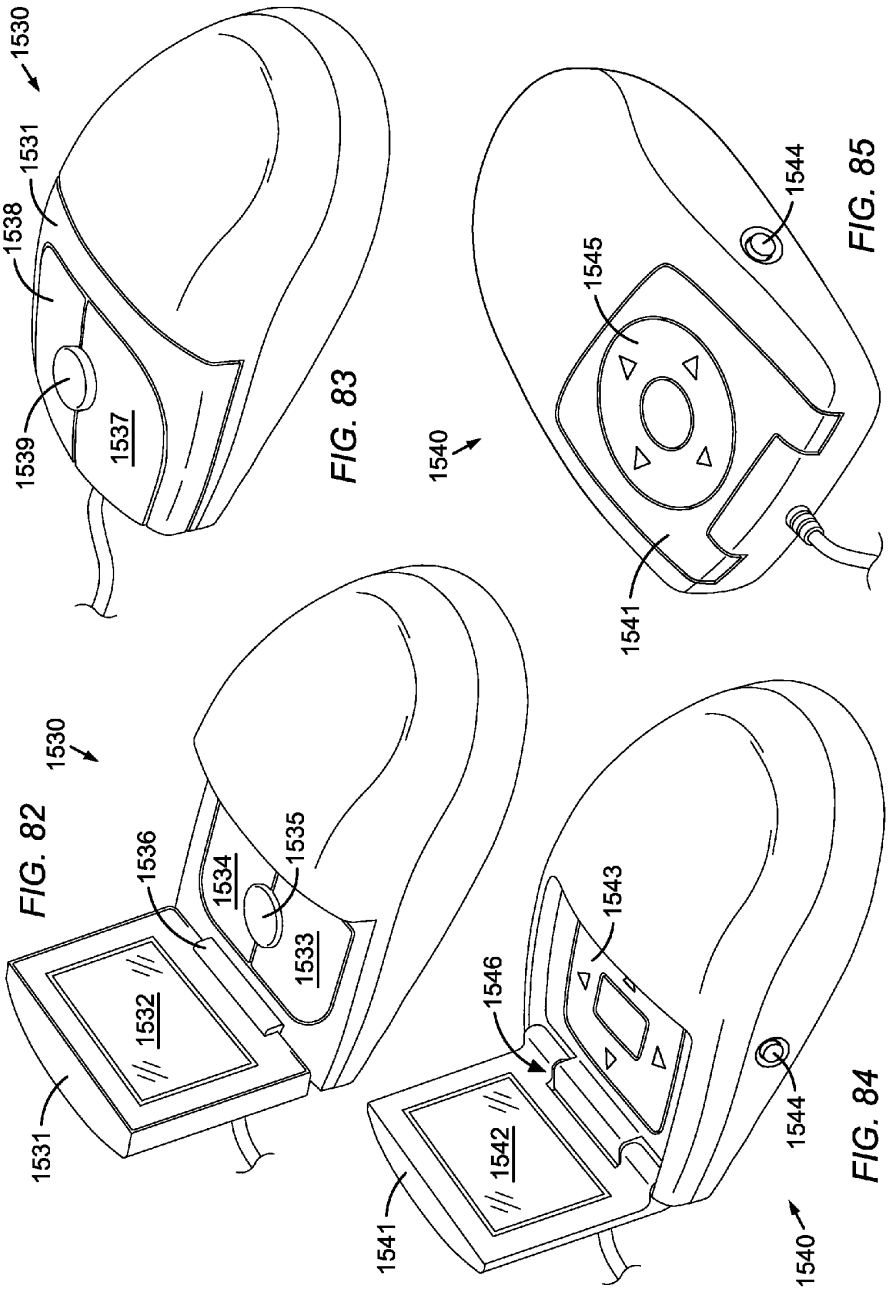

FIG. 82

FIG. 83

FIG. 84

FIG. 85

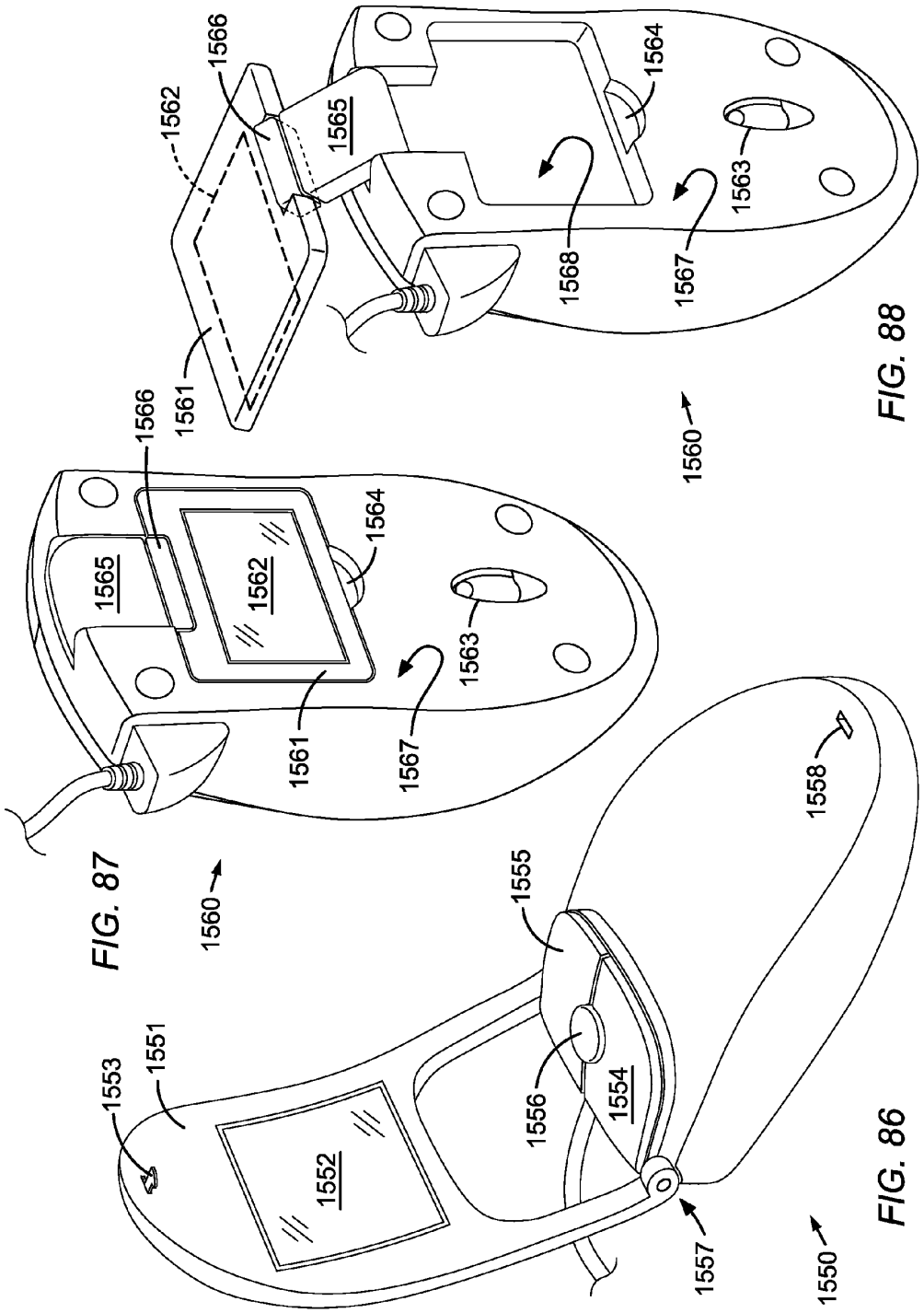

FIG. 88

FIG. 87

FIG. 86

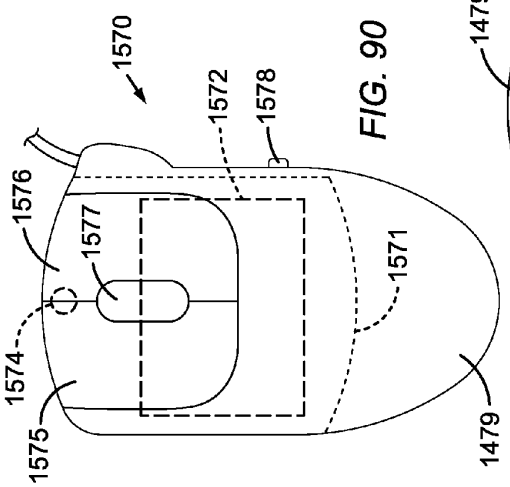

FIG. 90

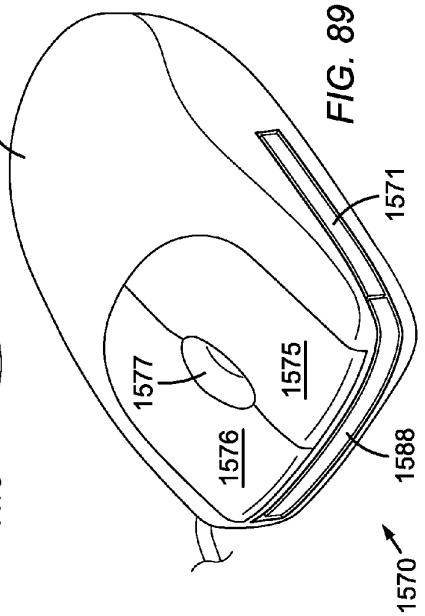

FIG. 89

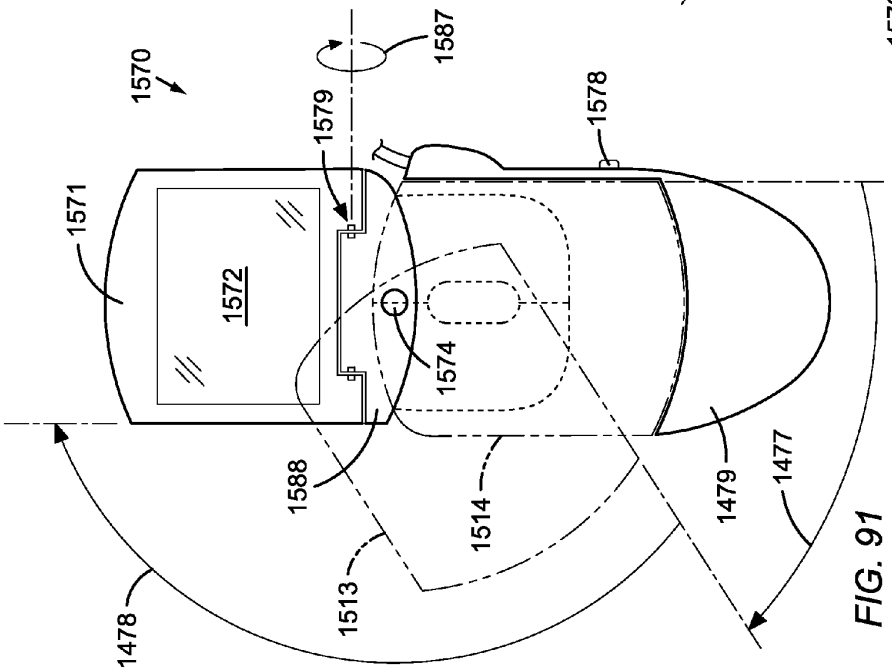

FIG. 91

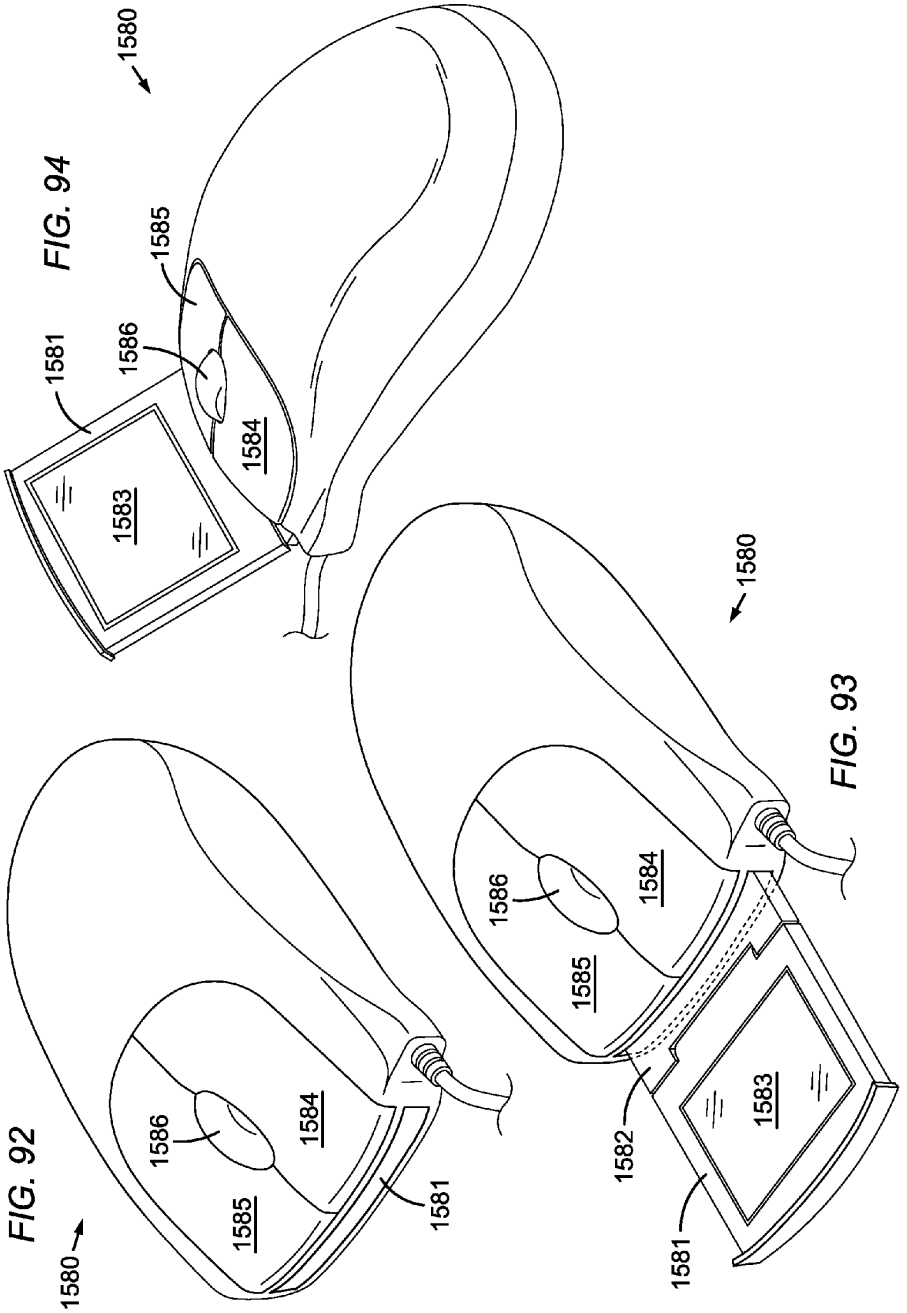

FIG. 92

FIG. 93

FIG. 94

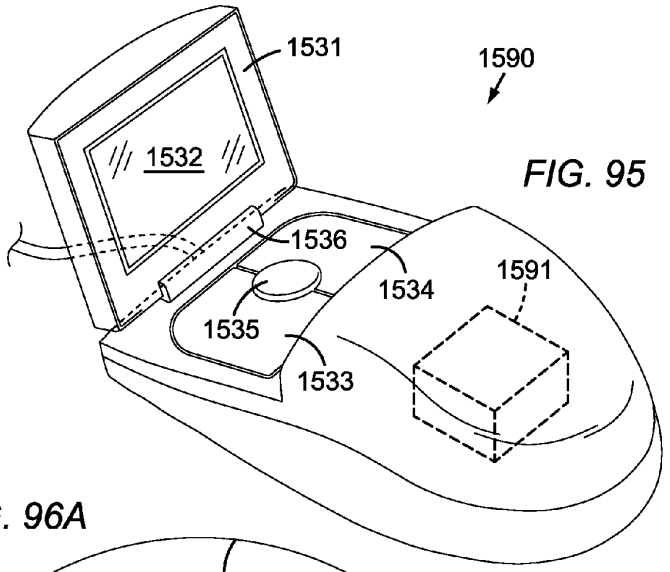

FIG. 95

FIG. 96A

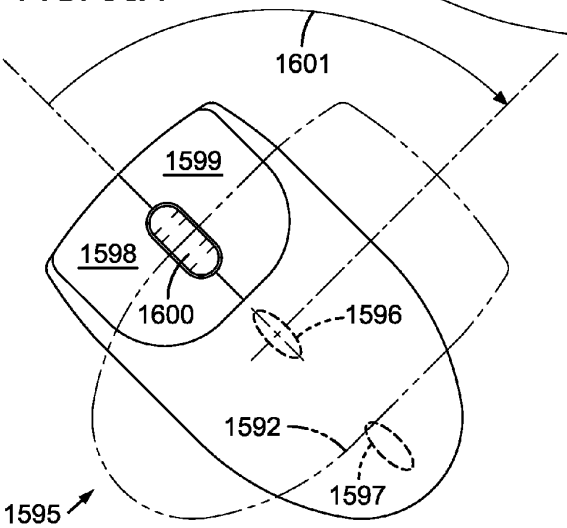

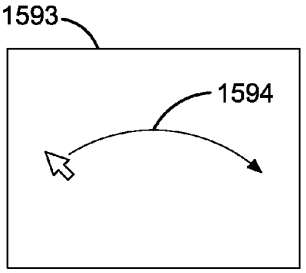

FIG. 96B

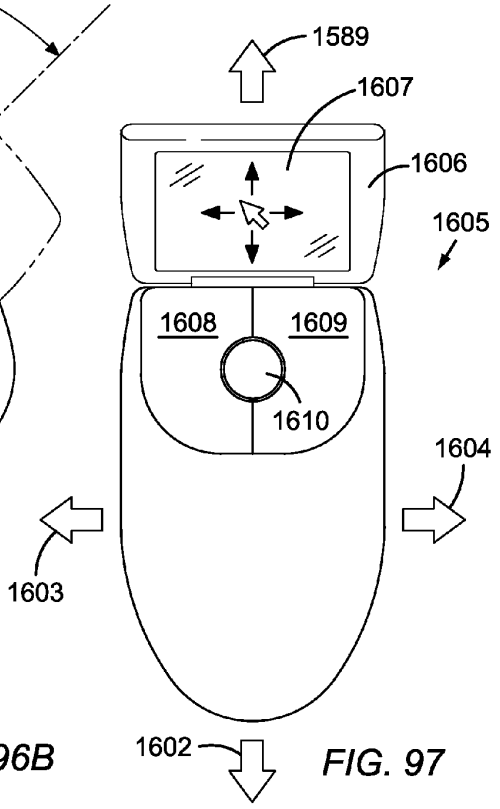

FIG. 97

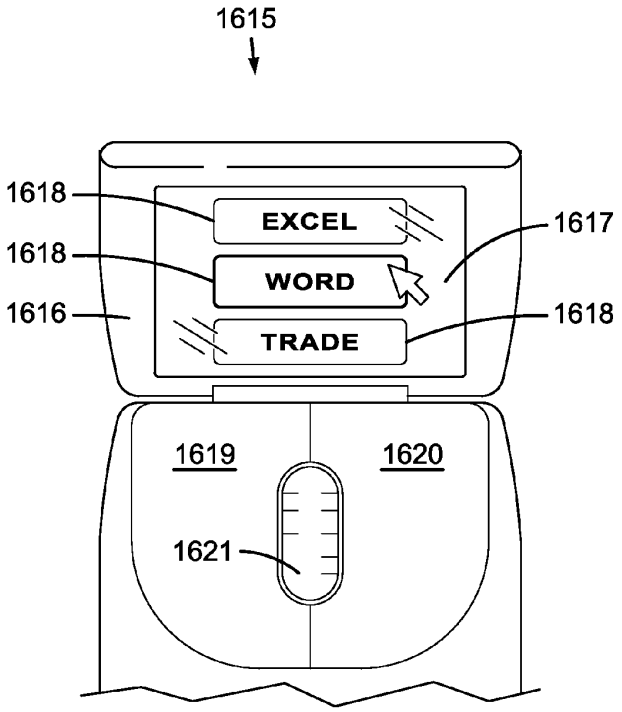

FIG. 98A

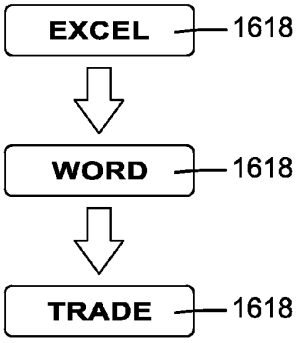

FIG. 98B

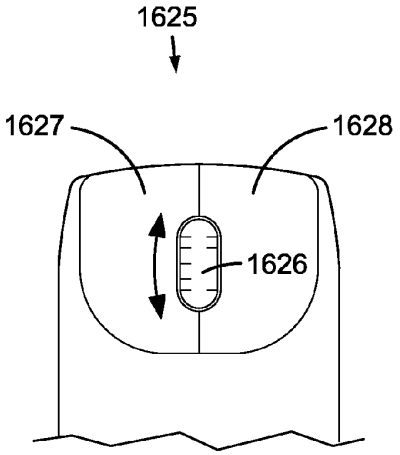

FIG. 99A

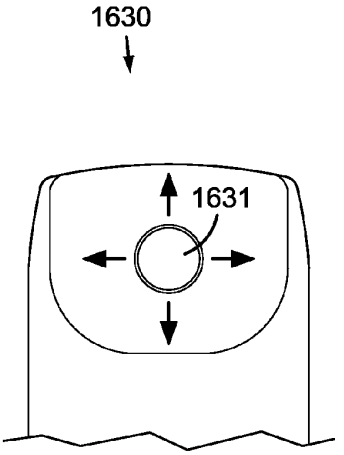

FIG. 99B

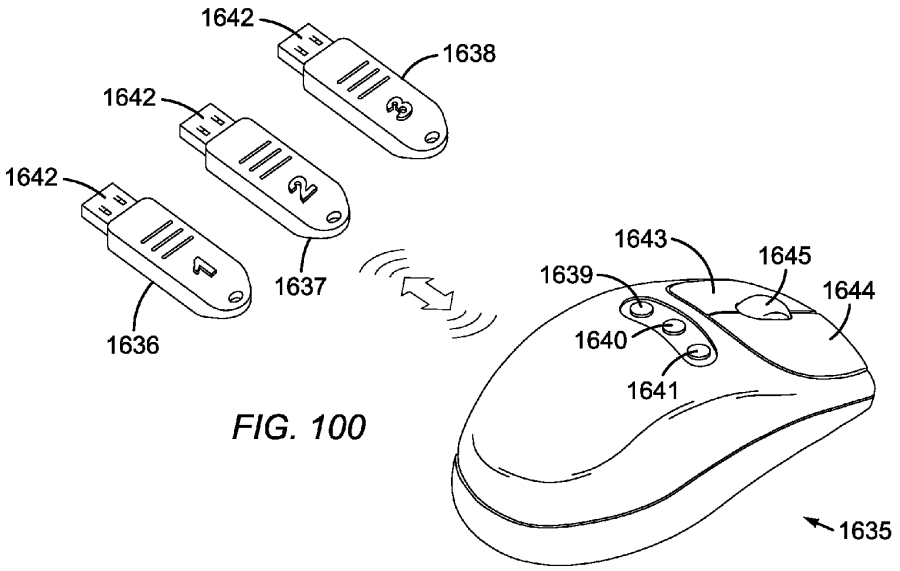

FIG. 100

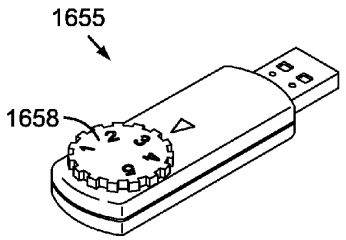

FIG. 102A

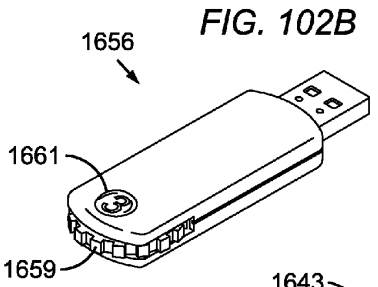

FIG. 102B

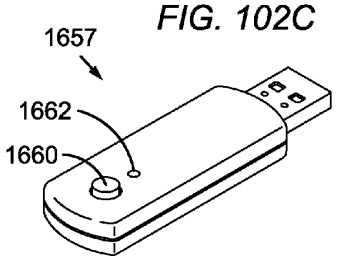

FIG. 102C

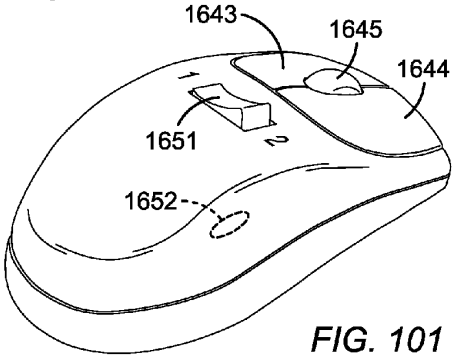

FIG. 101

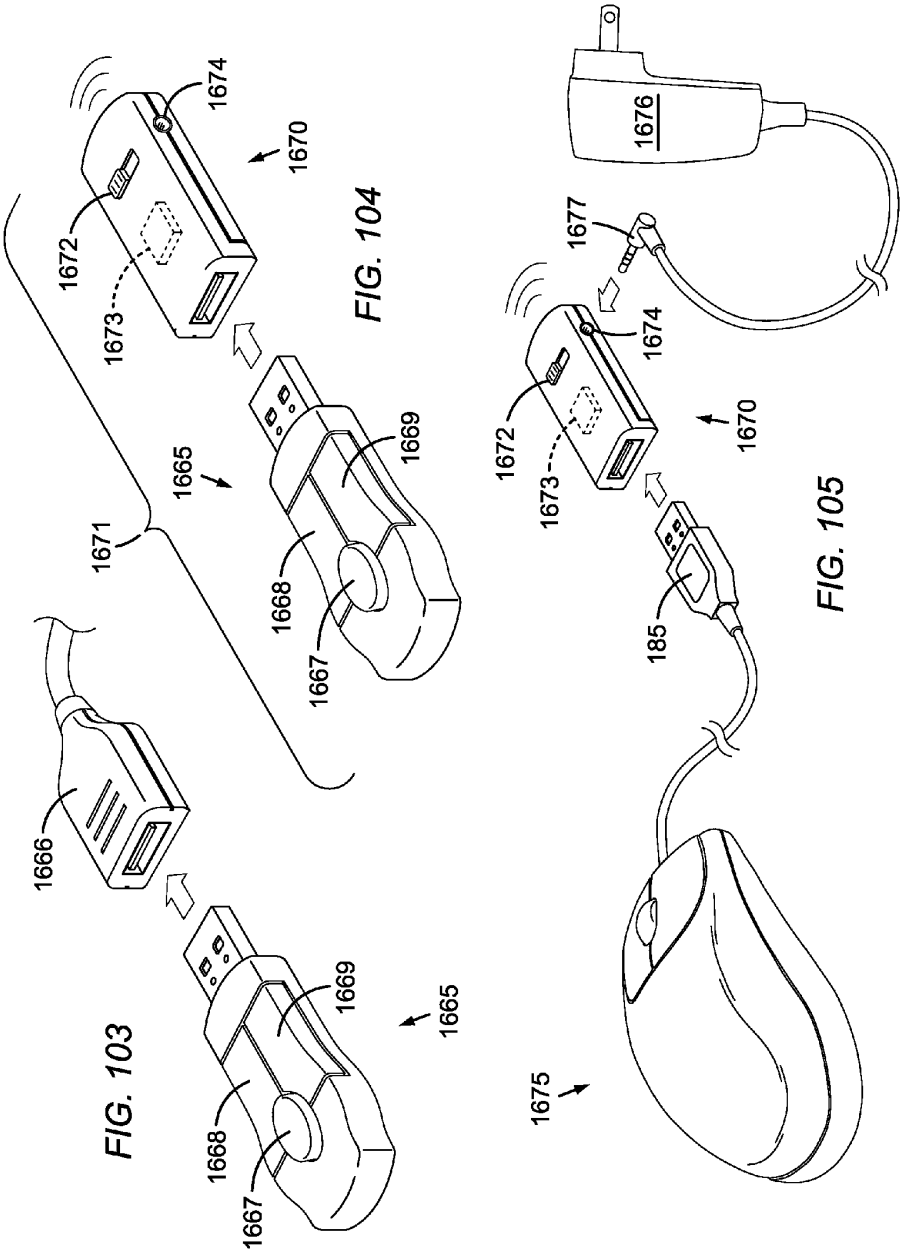

FIG. 103

FIG. 104

FIG. 105

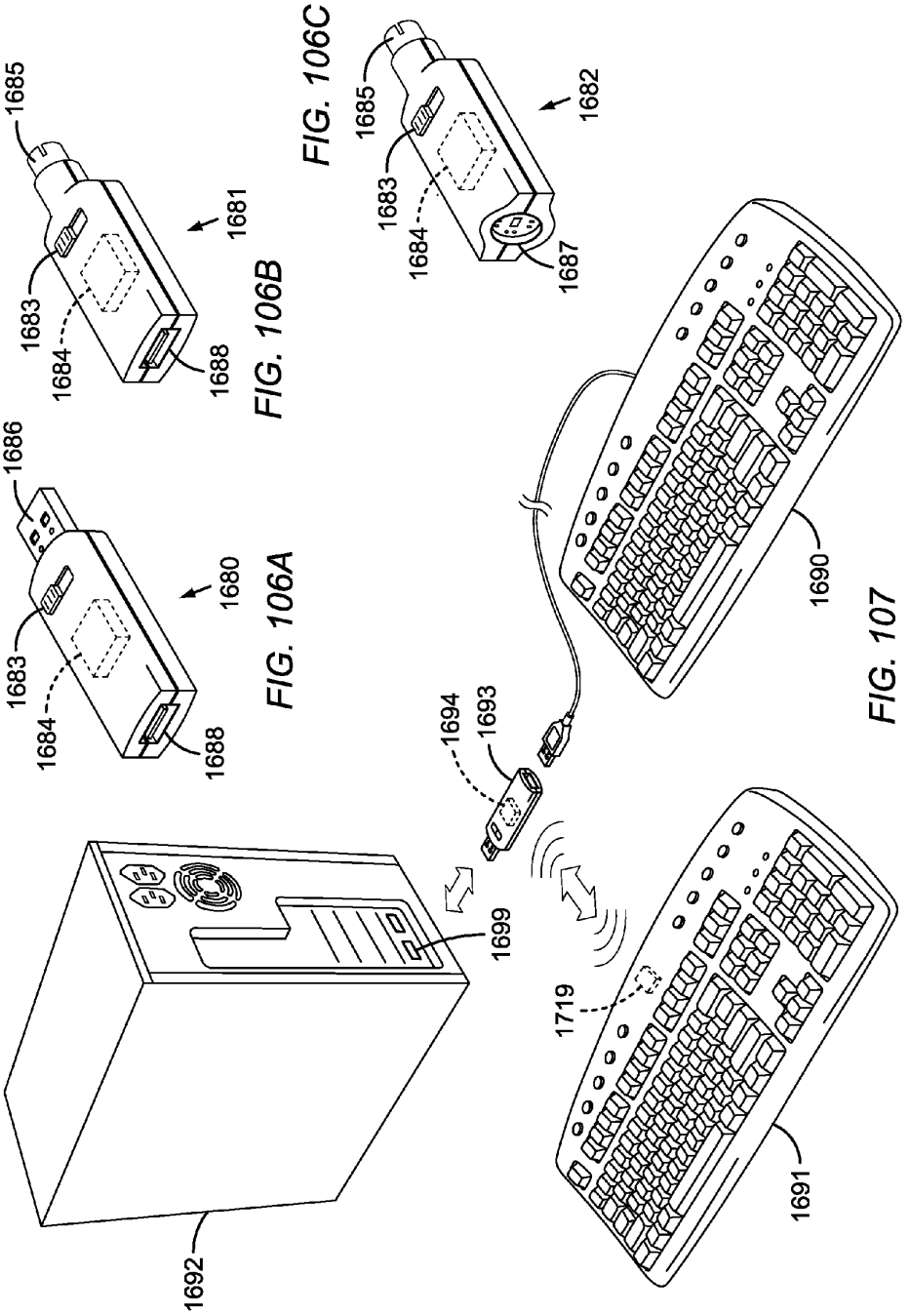

FIG. 106A

FIG. 106B

FIG. 106C

FIG. 107

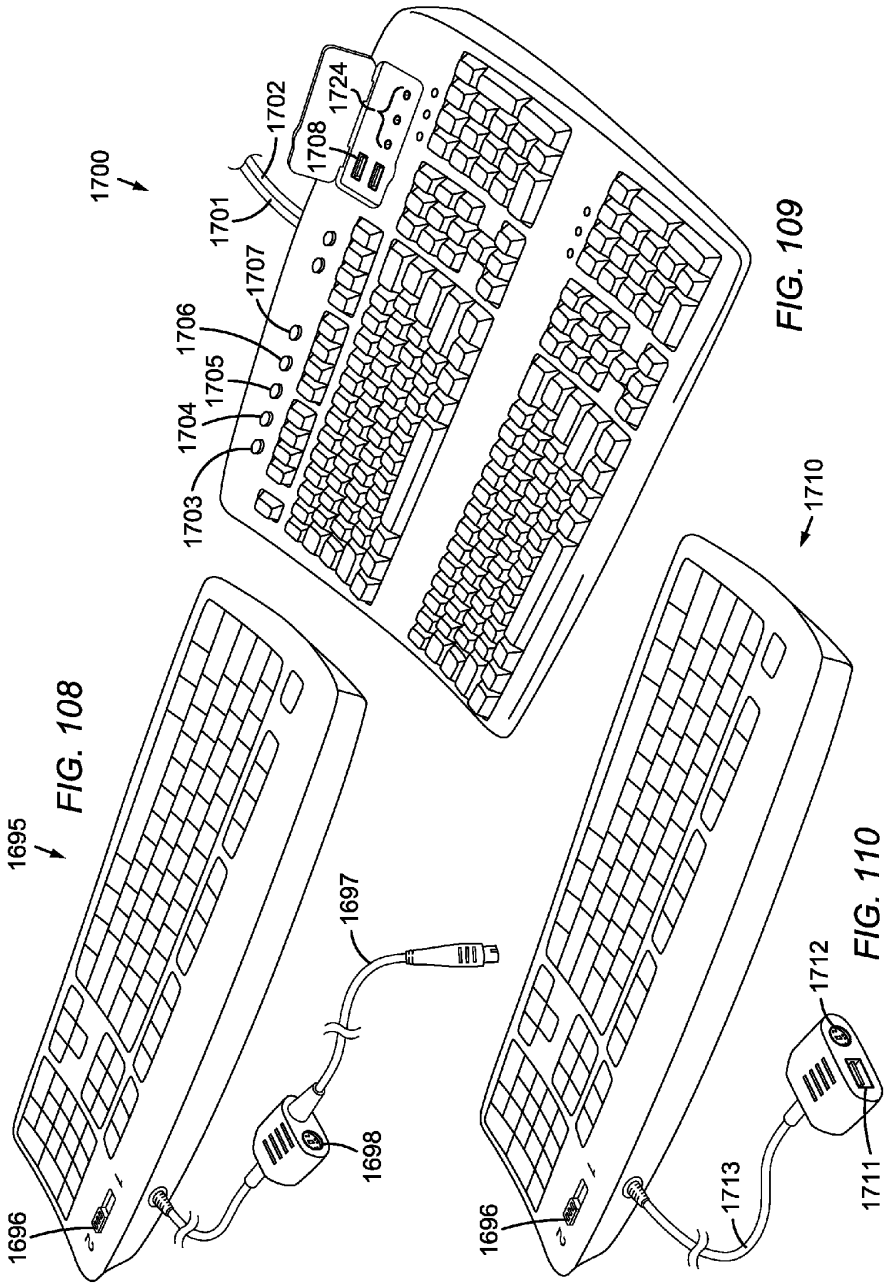

FIG. 108

FIG. 109

FIG. 110

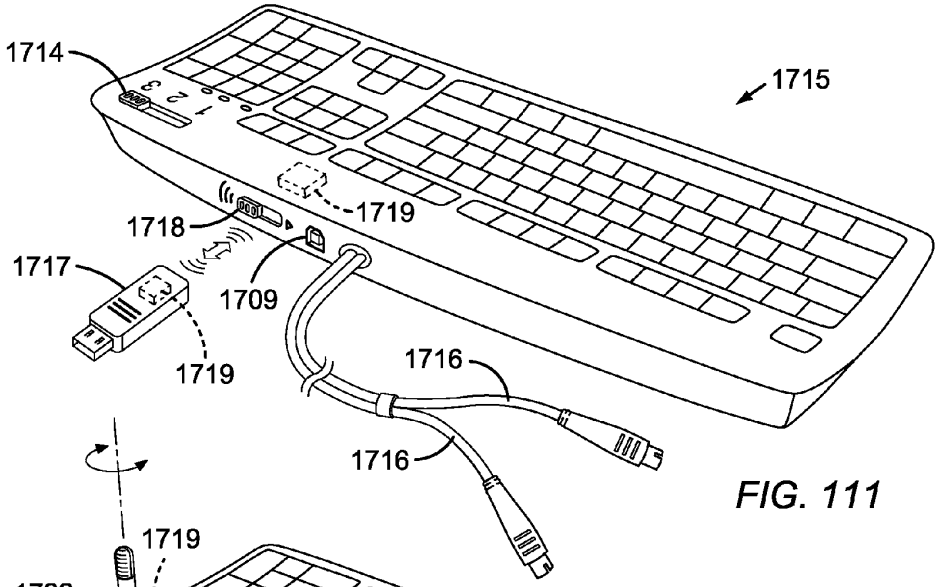

FIG. 111

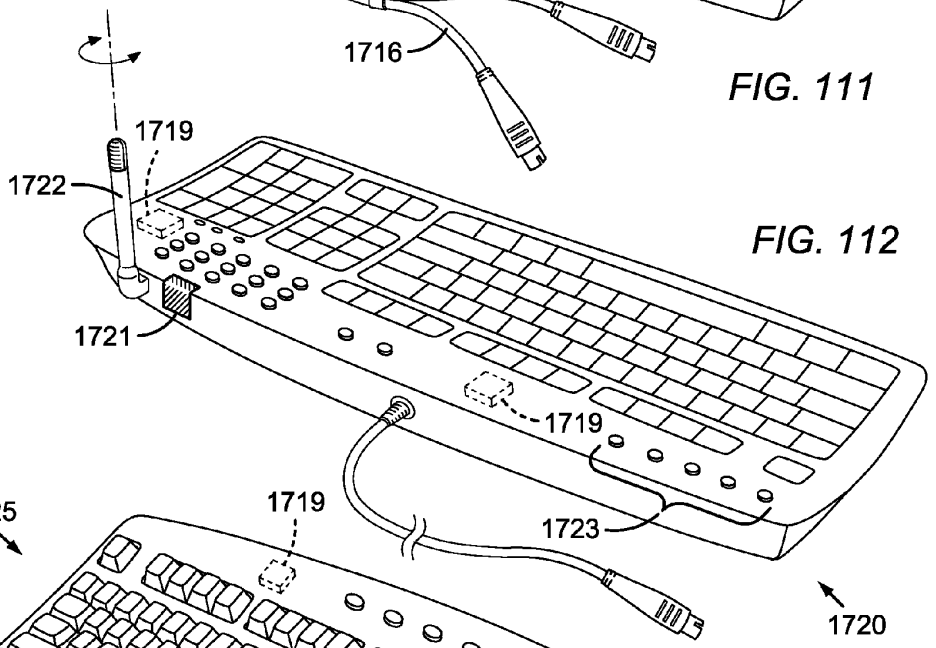

FIG. 112

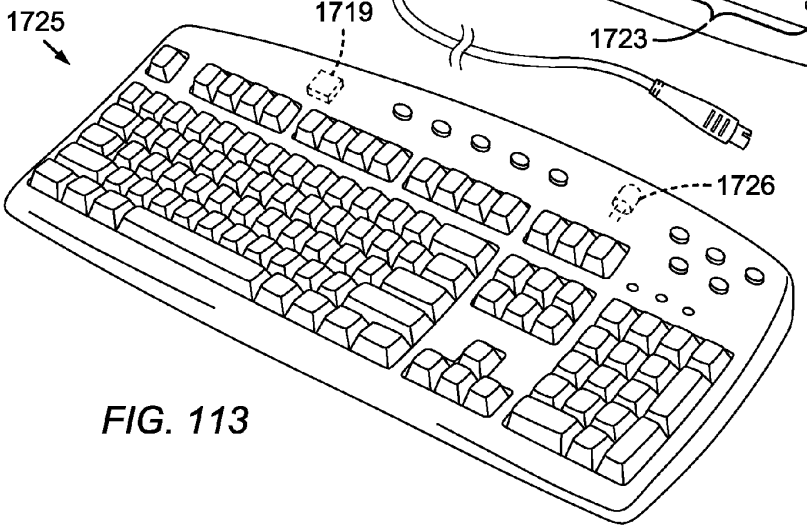

FIG. 113

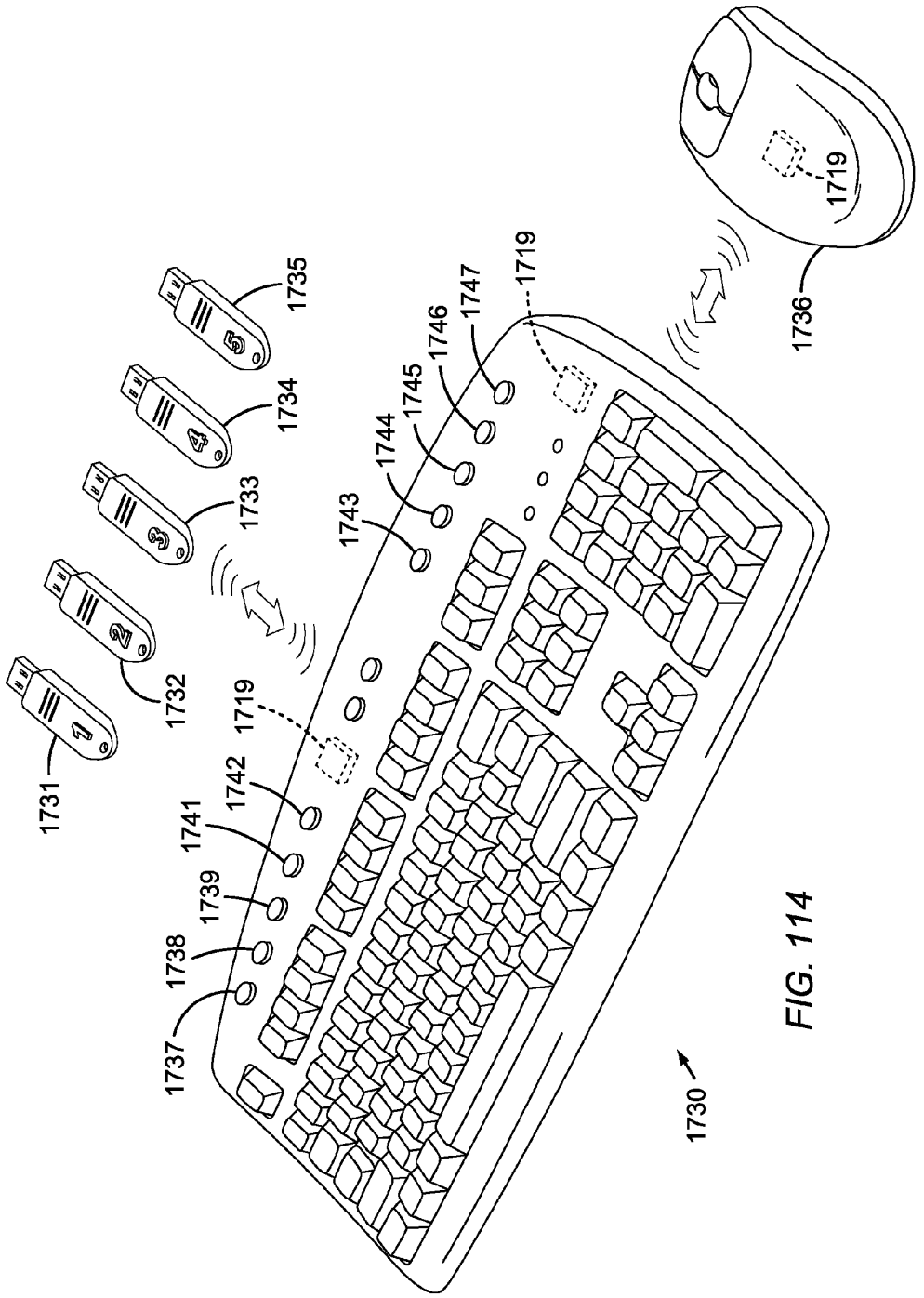
1731
1732
1733
1734
1735
1719
1742
1741
1739
1738
1737
1743
1744
1745
1746
1747
1719
1736
1719
1730

FIG. 114

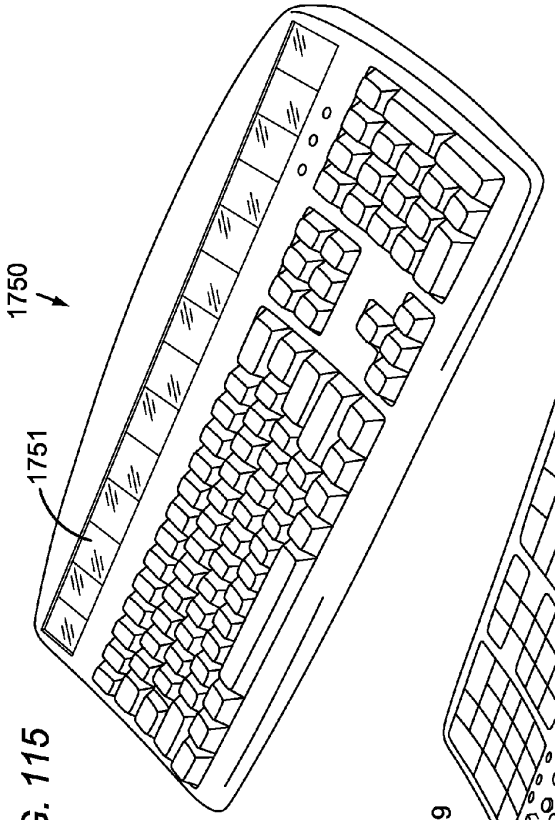

FIG. 115

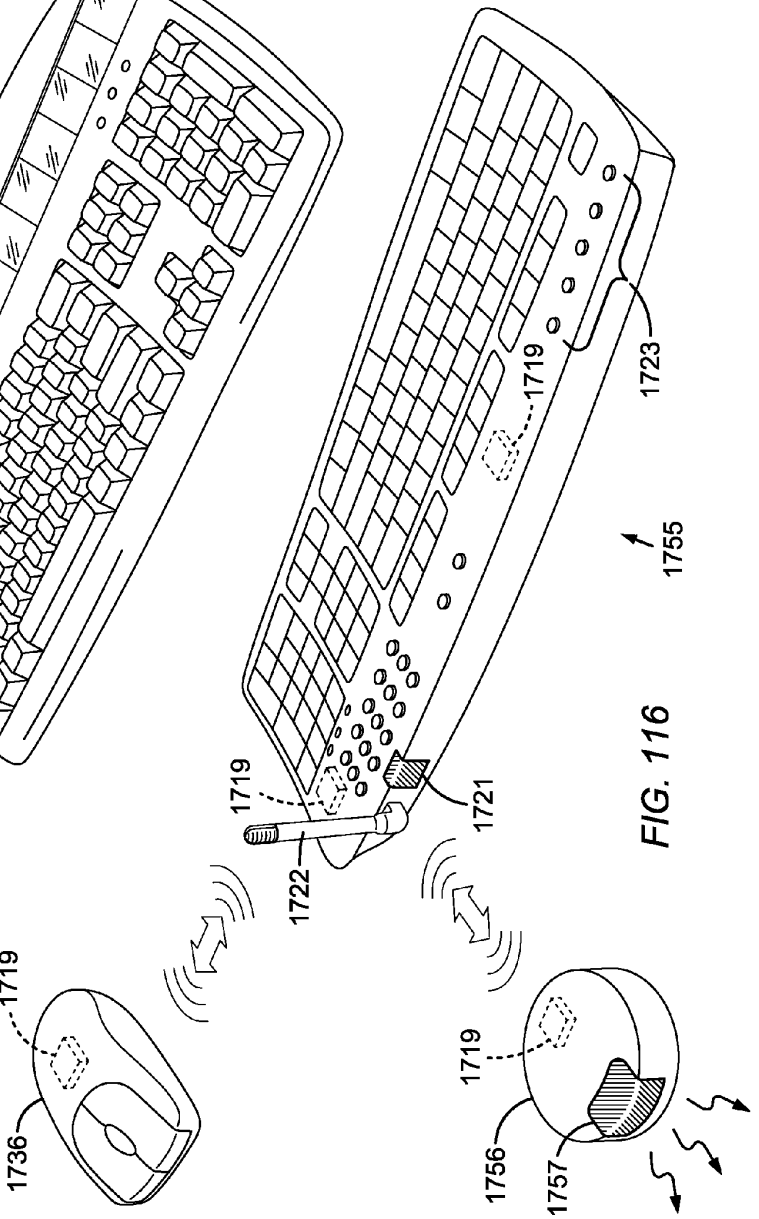

FIG. 116

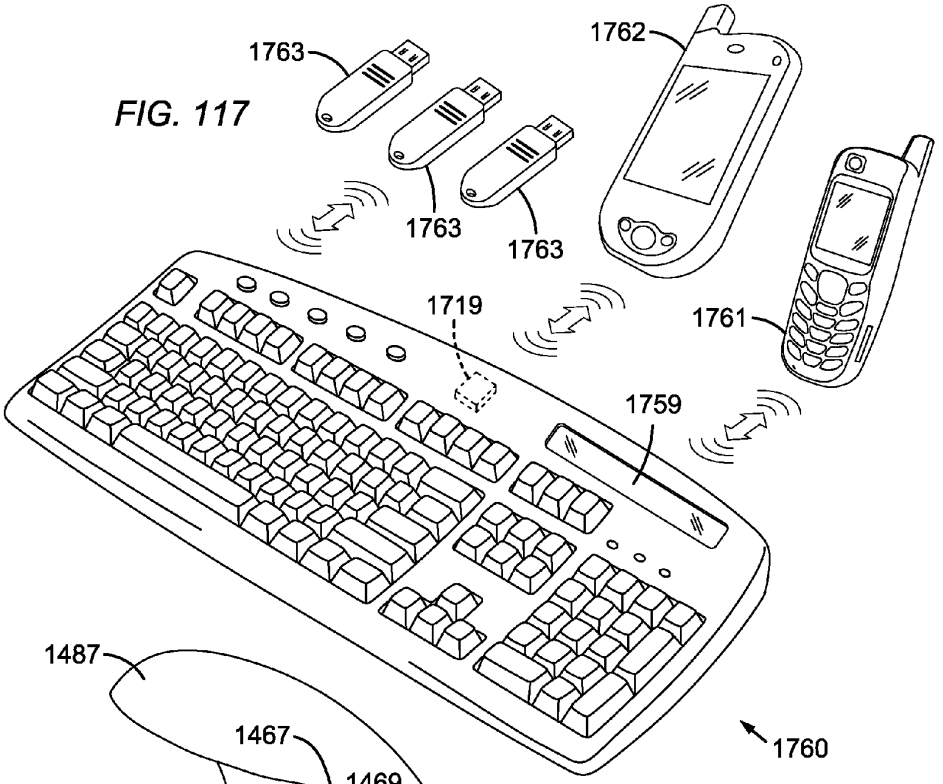

FIG. 117

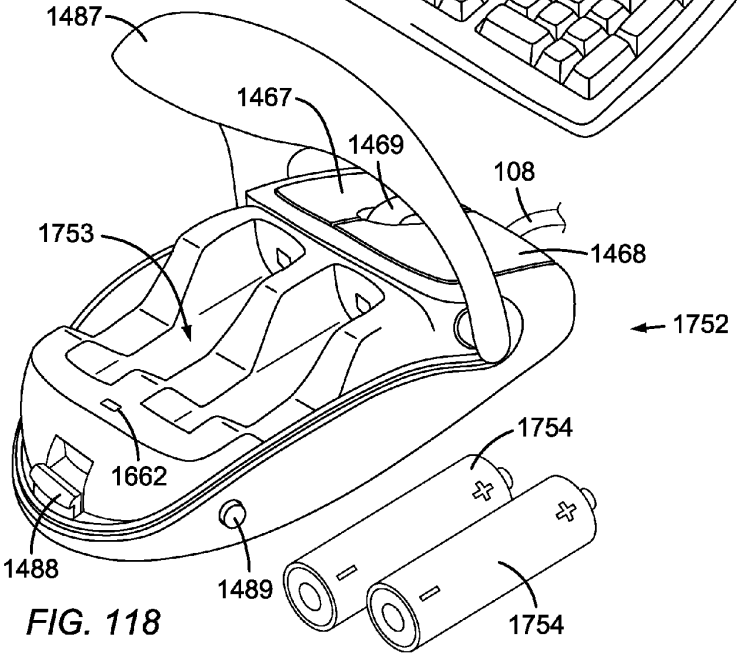

FIG. 118

COMPUTER APPARATUS WITH ADDED FUNCTIONALITY

CROSS-REFERENCE TO RELATED APPLICATIONS

[0001] This application is a continuation of U.S. patent application Ser. No. 11/609,991, filed Dec. 13, 2006, and entitled "Computer Apparatus with added functionality" which is a continuation-in-part of U.S. patent application Ser. No. 11/160,090, filed Jun. 8, 2005, and entitled "Computer Apparatus with added functionality" which claims the benefit of priority to U.S. Provisional Patent Application Ser. No. 60/577,593, filed Jun. 8, 2004. U.S. patent application Ser. No. 11/609,991 filed Dec. 13, 2006 further claims the benefit of priority to U.S. Provisional Patent Application Ser. No. 60/597,601, filed Dec. 13, 2005, and U.S. Provisional Patent Application Ser. No. 60/597,745, filed Dec. 19, 2005. Each of the applications referred to above are incorporated by reference in their entirety into this application.

COPYRIGHT NOTICE

[0002] This document contains material that is subject to copyright protection. The applicant has no objection to the facsimile reproduction of this patent document, as it appears in the U.S. Patent and Trademark Office (PTO) patent file or records or in any publication by the PTO or counterpart foreign or international instrumentalities. The applicant otherwise reserves all copyright rights whatsoever.

FIELD OF THE INVENTION

[0003] This invention relates generally to computer peripherals such as a computer mouse apparatus and keyboard apparatus, and more particularly, to incorporating additional devices, functionality, or features within such computer apparatus.

BACKGROUND OF THE INVENTION

[0004] The computer mouse has become an essential component of desktop computing since graphical user interface was popularized in the 1980s with by the introduction of the Apple Macintosh.

[0005] In the succeeding 20 years, the computer mouse has undergone a series of innovations including the addition of a right- and left-click button, a scroll wheel, an optical sensor, a track ball sensor, a laser sensor, and wireless communication to the host PC.

[0006] A mouse requires an ergonomic shape to fit comfortably into the hand, which is one factor that has kept its size relatively stable. However, the internal electronics of the mouse follows a trend to become miniaturized with many circuits integrated within a single chip, perhaps in an attempt by manufacturers to reduce costs as well as size. Computer peripherals are often distributed as stand alone products, with the cost of manufacturing and distribution to retailers is a significant portion of the retail cost.

[0007] There is room within a typical mouse enclosure, as well as the enclosures of other peripheral devices, for added functionality. With so many standalone devices connected to a host PC, there is a need to combine devices within a single device or apparatus for reasons of economy, practicality, and convenience. Thus, it is an objective of the present invention to combine one or more additional devices within a mouse apparatus, or a related computer peripheral such as a keyboard, to obtain additional functionality and convenience for the user without the need to carry multiple stand alone products that add clutter and bulk.

BRIEF SUMMARY OF THE INVENTION

[0008] A computer apparatus of the present invention include a mouse apparatus or a keyboard apparatus with additional functionality or features disposed within the apparatus enclosure. Each additional functionality enhances the overall functionality of the computer apparatus. In the preferred embodiments, the additional devices include a remote control, a multiple host mouse apparatus, a multiple host keyboard apparatus, various trackpoint-style control devices, mouse apparatus with various integrated displays and various means of extending or retracting said integrated displays, fingerprint readers, USB receptacles and hub devices, various mouse apparatus enclosure covers with various devices disposed within said enclosure cover, a fuel cell, a dual sensor mouse apparatus, miniature mouse apparatus and their associated wireless transmitters, keyboard apparatus with IR and IrDA remote control ports, solar panels as a power source, and the like.

[0009] The present invention provides an optical computer mouse with an embedded wireless adapter connected to its host PC by a USB connector. A USB hub or hub/bridge is also embedded within the mouse enclosure to allow the wireless adapter to share the single USB connection to the host PC.

[0010] A Trackpoint device or a Trackball may be incorporated into the mouse enclosure to function as a cursor-pointing device and/or a window scroll-control device. The trackball device serves as the mouse's motion sensor and is used for cursor-pointing function.

[0011] The computer mouse may be configured as a wired or wireless device. In a wired configuration, any wireless communications adapter may serve to add wireless capability to the host PC or a network device. In a wireless configuration, the wireless communications adapter serves to enable the devices embedded within the mouse enclosure to communicate with and support the host PC or a network device.

[0012] RAM memory and/or a flash memory card reader may also be incorporated into either the base USB connector unit or the mouse enclosure. There is no need to install a separate wireless network adapter to the host PC. The wireless or Wi-Fi adapter is built-in into the mouse apparatus.

[0013] The computer mouse apparatus also discloses how multiple devices, commonly purchased by computer users, may share a common mouse enclosure to reduce manufacturing, packaging, and distribution costs relative to individually packaged USB or PC Card devices.

[0014] In accordance with another aspect of the present invention, a computer mouse may serve as a network mouse attached to a host PC or computer device via a USB connection or similar cable connection. A multiple port USB hub device may be embedded within the mouse enclosure and serves to network the embedded devices to the host PC. The computer mouse may be configured to function as a wired or wireless network mouse. The mouse can have a network connection that can access or provide input to a number of target devices connected to the network, not just the host PC.

[0015] In accordance with another aspect of the present invention, a computer mouse may also contain one or more of the following devices which may be integrated or removable from the mouse enclosure: a USB or network hub, a connector, a module, a modem, a sensor, an on/off switch, a tem-

perature sensor, a USB on-the-go bridge controller device, an encryption chip or hardware, a digital signal processing device, a modem circuitry, a display device, a digital camera, a webcam, CPU and the like. Such devices may function individually and/or in combination with the other devices, sensors, and electronics to add to or enhance the function of the computer mouse apparatus. The additional components may share one or more wired or wireless paths to a host PC and to other devices, or to a network.

[0016] In accordance with an additional aspect of the present invention, a CPU and its associated chipsets or a system-on-a-chip device may be utilized within the computer mouse apparatus. Such a CPU or system chip may serve to manage computer processing tasks within the mouse enclosure rather than relying solely on the host PC's processing power. Such a mouse apparatus may run a proprietary OS, a Palm OS 3, 4 or 5, Pocket PC, SmartPhone, PalmSource, Symbian, Java, Microsoft, and Linux operating systems or any desktop O/S such as Windows XP. A built-in CPU or system chip would enable the mouse electronics and the remaining embedded devices to function as a small self-contained computer.

[0017] In accordance with yet another aspect of the present invention, the mouse apparatus may incorporate USB host capability that may store data to or retrieve data from the memory card utilizing the computer mouse's built-in wireless communications module.

[0018] The computer mouse apparatus of the present invention is environmentally friendly, as it reduces the manufacturing, packaging, and distribution costs of multiple discrete devices manufactured or sold as separate discrete devices.

[0019] Also disclosed, are software controls for mapping the mouse velocity to a cursor velocity and for controlling the function and settings of the Trackpoint device. Further disclosed is a method for assigning the mouse's data output to a variety of devices connected to a wired or wireless network.

[0020] The foregoing summary of the present invention is not intended to describe every implementation of the present invention. Additional aspects and advantages of the invention will be readily apparent from the following detailed description of preferred embodiments thereof, which proceeds with references to the accompanying drawings.

BRIEF DESCRIPTION OF THE DRAWINGS

[0021] FIG. **1** illustrates a top view of a computer mouse apparatus incorporating a Trackpoint™ device.

[0022] FIG. **2** illustrates a top view of a computer mouse apparatus with a Trackpoint sensor in an alternative location to that shown in FIG. **1**.

[0023] FIG. **3** illustrates a side view of the computer mouse apparatus as shown in FIG. **1**.

[0024] FIG. **4** illustrates a front view of the computer mouse apparatus as shown in FIG. **1**.

[0025] FIG. **5** illustrates a top view of a computer mouse apparatus with a Trackpoint sensor and a mouse scroll wheel.

[0026] FIG. **6** illustrates a top view of a cordless computer mouse apparatus with a mouse scroll wheel and a Trackpoint device in an alternative arrangement to that of FIG. **5**.

[0027] FIG. **7** illustrates a top view of a computer mouse apparatus with two Trackpoint devices, a button, and a flash memory reader slot.

[0028] FIG. **8** illustrates a top view of a computer mouse apparatus with a Trackpoint sensor and a built-in wireless communication adapter module with an internal antenna.

[0029] FIG. **9** illustrates a front view of a computer mouse apparatus with a mouse scroll wheel control, a USB plug, a USB jack, and a built in Wi-Fi adapter module with its associated external antenna.

[0030] FIG. **10** illustrates a side view of the computer mouse apparatus as shown in FIG. **8**.

[0031] FIG. **11** illustrates a perspective view of a wireless computer mouse apparatus with a Trackpoint device and an associated base unit having an integrated wireless communications adapter module and an internal antenna.

[0032] FIG. **12** illustrates a perspective view of a wired computer mouse apparatus with an embedded Trackpoint device and an in-line electronics housing and connection unit which incorporates an integrated wireless network adapter module and an external antenna.

[0033] FIG. **13** illustrates a top view of a computer mouse apparatus with a Trackpoint sensor and an internal group of peripheral devices which include a mini hard drive, a wireless adapter module, flash (RAM or ROM) memory, and a flash memory card reader.

[0034] FIG. **14** illustrates a top view of a computer mouse apparatus with a Touchpad cursor-pointing and/or scrolling device, and internal peripherals which include a mini hard drive, flash memory, and a flash memory card reader.

[0035] FIG. **15** illustrates a top view of a computer mouse apparatus with a 5-way navigation button.

[0036] FIG. **16** illustrates a block diagram of the representative system architecture for the computer mouse apparatus depicted in FIGS. **8** to **15**, and FIGS. **17** to **25**.

[0037] FIG. **17** illustrates a top view of a computer mouse apparatus with a Trackpoint sensor, a display, a flash memory card slot or SIM card reader, and a digital camera or webcam.

[0038] FIG. **18** illustrates a top view of a computer mouse apparatus with a Trackball cursor-pointing and window scrolling device, a display, a SIM card reader or flash memory card reader, and a digital camera or webcam.

[0039] FIG. **19** illustrates a side view of the computer mouse apparatus as shown in FIG. **17** with an integrated speaker or microphone element, a network connector, and a hinged display enclosure.

[0040] FIG. **20** illustrates a top view of a computer mouse apparatus with a Trackpoint cursor-pointing and window scrolling sensor, a display, a flash memory card slot, a digital camera, a number keypad or keyboard, and an optional recharging unit.

[0041] FIG. **21** illustrates a side view of the computer mouse apparatus as depicted in FIG. **20**, showing a representation of a printed circuit board, a flash memory card slot, and a hinged display assembly.

[0042] FIG. **22** illustrates a top view of a computer mouse apparatus with a mouse scroll wheel device, a display, a flash memory card slot, and a digital camera.

[0043] FIG. **23** illustrates a top view of a computer mouse apparatus with a 5-way navigation button, a display, a flash memory slot, a digital camera, and a numerical keypad or keyboard.

[0044] FIG. **24** illustrates a top view of a computer mouse apparatus with a Trackpoint sensor, a display, a flash memory card slot, a digital camera, a biometric fingerprint scanner, and an ID card or SIM card slot.

[0045] FIG. **25** illustrates a top view of a computer mouse apparatus with a Touchpad cursor-pointing and/or window scrolling device, a display, a flash memory card slot, a web-

cam camera, and a group of keys which are representative of function keys, a numerical keypad, or a keyboard.

[0046] FIG. **26** is a block diagram of a simplified USB hub integrated in the computer mouse apparatus.

[0047] FIG. **27** shows a simplified block diagram of an 802.11 networking chipset; the host interface implements functions that allow the chipset to interface with a host system such as a computer.

[0048] FIG. **28** shows a system block diagram of a wireless computer mouse apparatus with an integrated USB OTG bridge controller and USB hub chip, mouse electronics, a wireless communications adapter, and several embedded devices.

[0049] FIG. **29** illustrates a perspective view of a USB-based PC headset apparatus with added device functionality.

[0050] FIG. **30** illustrates a top view of a wired keyboard apparatus with added device functionality.

[0051] FIG. **31** shows a representative display of a Properties Settings dialog box suitable for the mouse apparatus depicted in FIGS. **8** to **15** and FIGS. **17** to **25**.

[0052] FIG. **32** illustrates a perspective view of a computer mouse apparatus with its enclosure door in an open position to show a mouse cavity with an integrated USB jack.

[0053] FIG. **33** illustrates a perspective view of a computer mouse apparatus as shown in FIG. **32**, with the USB module connected into the USB jack via its associated USB plug.

[0054] FIG. **34** illustrates a perspective view of a computer mouse apparatus, similar to that shown in FIGS. **32-33**, with its enclosure cover in an open position to show two module jacks of different sizes.

[0055] FIG. **35** illustrates a perspective view of a wireless computer mouse apparatus with an integrated PCMCIA slot.

[0056] FIG. **36** illustrates a perspective view of a wireless computer mouse apparatus as shown in FIG. **35**, with the PCMCIA module connected into the PCMCIA slot via the PCMCIA connector.

[0057] FIG. **37** illustrates a perspective view of a wireless computer mouse apparatus with an integrated USB jack and a spring-loaded cover.

[0058] FIG. **38** illustrates a perspective view of a wireless computer mouse apparatus as shown in FIG. **37**, with the USB module connected into USB jack via the USB plug.

[0059] FIG. **39** shows a computer mouse apparatus incorporating a gas sensor unit and its associated electronics.

[0060] FIG. **40** shows a computer mouse apparatus incorporating a dual cursor pointing device.

[0061] FIG. **41** shows a computer mouse apparatus on top of a companion solar panel or array of solar cells disposed within a mousepad.

[0062] FIG. **42** shows a computer mouse apparatus powered by solar energy.

[0063] FIG. **43** shows a computer mouse apparatus with an integrated optical drive disposed within the mouse enclosure and accessible through the enclosure cover.

[0064] FIGS. **44***a*-**44***b* are simplified partial cross sectional views of a computer mouse apparatus taken along lines **44-44** of FIG. **1** showing a molded pressure absorbing spring that functions to reduce the stress on a miniature switch caused by a user's clicking of the mouse button.

[0065] FIGS. **45***a*-**45***b* illustrate a fixedly attached pressure absorbing leaf spring, a variation of the spring design as shown in FIGS. **44***a*-**44***b*.

[0066] FIGS. **46***a*-**46***b* illustrate a pressure absorbing compression spring, a variation of the spring designs as shown in FIGS. **44***a*-**45***b*.

[0067] FIG. **47** shows a cursor velocity tabpage, which is used to control the relationship between the velocity of the mouse movement and the velocity of the displayed cursor associated with the mouse movement.

[0068] FIG. **48** shows a simple flowchart process to control cursor velocity.

[0069] FIGS. **49-50** show in detail the operation of the two-dimensional graph of FIG. **47**.

[0070] FIG. **51** shows a computer apparatus architecture typically associated with the mouse apparatus of FIGS. **17-25** in accordance with an embodiment of the present invention.

[0071] FIG. **52** shows one use of a mouse apparatus with added functionality in a PABX branch exchange telephone system located within an office environment.

[0072] FIGS. **53***a* and **53***b* show a partial view of a network mouse apparatus assigned to input data to a specific device.

[0073] FIG. **54** illustrates a typical operating environment for a network mouse apparatus.

[0074] FIG. **55** shows a configuration settings panel associated with a Trackpoint-style device present on a mouse apparatus, for example, the mouse apparatus of FIG. **40**.

[0075] FIG. **56** illustrates a sensor function tabpage.

[0076] FIG. **57** illustrates a top view of a cantilevered printed circuit board (PCB), a variation of the pressure absorbing spring designs as shown in FIGS. **44***a*-**46***b*.

[0077] FIG. **58** is a cross sectional view of the mouse apparatus as shown in FIG. **57** and a variation of the cross sectional views of FIGS. **44***a*-**46***b*.

[0078] FIGS. **59***a*-**59***b* show back views of a mouse apparatus with a built-in charger unit and a retractable wall plug located at its bottom side.

[0079] FIG. **60** shows a mouse apparatus architecture when the additional device is in a RAID system of mini hard drives.

[0080] FIG. **61** shows a block diagram of the two host PCs (host PC A and host PC B) in a wireless dual host mouse system.

[0081] FIG. **62** shows the electronic architecture block diagram of a dual host mouse apparatus enabled with Bluetooth technology.

[0082] FIG. **63** shows the schematic block diagram for the operation of the wired and wireless keyboard with multiple channels for different host PCs.

[0083] FIG. **64** illustrates the schematic block diagram of the interface of the keyboard transceiver to the host PC.

[0084] FIG. **65** shows the direct connection of the Bluetooth transceiver to the host PC.

[0085] FIG. **66** shows a perspective view of a mouse apparatus with an integrated remote control for controlling various electronic devices.

[0086] FIG. **67** shows a perspective view of a mouse apparatus with a USB port for receiving a small device such as a memory stick or flash memory device.

[0087] FIG. **68** shows a perspective view of mouse apparatus with an externally mounted serial port.

[0088] FIG. **69** shows a perspective view of mouse apparatus with an integrated biometric scanner located on the surface of the mouse apparatus.

[0089] FIG. **70** shows a perspective view of mouse apparatus with an integrated rotating control knob that may adjust the level of an assigned parameter.

[0090] FIG. **71** shows a perspective view of mouse apparatus with a Copy key, a Paste key, and a Cut key conveniently located on the top surface of the mouse apparatus.

[0091] FIG. **72** shows a perspective view of a mouse apparatus with an enclosure cavity for storing small items within the mouse apparatus, similar to the mouse cavity of FIG. **32** but without the USB jack.

[0092] FIG. **73** shows a perspective view of the mouse apparatus of FIG. **72** with its enclosure cover in the closed position.

[0093] FIGS. **74-75** show a perspective view of a mouse apparatus with enclosure cavity containing a USB jack with its enclosure cover in the open and closed position respectively.

[0094] FIG. **76** shows a perspective view of a mouse apparatus with two adjacent USB jacks contained within enclosure cavity.

[0095] FIG. **77** shows a perspective view of a mouse apparatus similar to the mouse apparatus of FIG. **74** but employing a side-mounted hinge design to secure the enclosure cover to the mouse apparatus body.

[0096] FIG. **78** shows a perspective view of a mouse apparatus similar to the mouse apparatus of FIG. **74** but employing a car trunk-style hinge design to secure the enclosure cover to the mouse apparatus body.

[0097] FIG. **79** shows a perspective view of a mouse apparatus with an integrated biometric scanner and a USB jack located within the mouse cavity.

[0098] FIG. **80** shows a perspective view of a mouse apparatus with an integrated fuel cell to power the mouse electronics.

[0099] FIG. **81** shows a perspective view of a mouse apparatus with an integrated rotating control knob similar to that depicted in FIG. **70** but located within the mouse cavity.

[0100] FIGS. **82-83** show a perspective view of the mouse apparatus with the integrated display enclosure in the open and closed position respectively.

[0101] FIG. **84** shows a perspective view of a mouse apparatus with an integrated display screen.

[0102] FIG. **85** shows a perspective view of the mouse apparatus illustrated in FIG. **84** with the display enclosure in its closed position.

[0103] FIG. **86** shows a perspective view of a mouse apparatus with an integrated clamshell-style display enclosure.

[0104] FIGS. **87-88** show perspective views of a mouse apparatus with the integrated display enclosure that is stored inside the body of the mouse apparatus in the closed and open position respectively.

[0105] FIG. **89** shows a perspective view of the mouse apparatus of FIG. **91** with its display enclosure in a closed or retracted position and stored within the mouse apparatus enclosure.

[0106] FIG. **90** shows a top view of the mouse apparatus of FIG. **89** showing the relative positions of the display enclosure and display screen in hidden outline.

[0107] FIG. **91** illustrates a schematic top view of the mouse apparatus of FIG. **89** depicting the display enclosure as it pivots from inside to outside the mouse apparatus enclosure.

[0108] FIGS. **92-94** show various views of a mouse apparatus with an integrated sliding display screen that is stored within the body of the mouse apparatus.

[0109] FIG. **95** shows a perspective view of a mouse apparatus with an integrated display enclosure and a built-in TV tuner.

[0110] FIG. **96**A shows a top view of a mouse apparatus with two integrated displacement sensors.

[0111] FIG. **96**B shows a representative host PC display screen and the resulting path of a GUI style cursor when the mouse apparatus of FIG. **96**A.

[0112] FIG. **97** shows a top view of a mouse apparatus with an integrated display screen similar to the mouse apparatus of FIG. **95**.

[0113] FIG. **98**A shows a partial top view of a mouse apparatus with an integrated display screen fixedly attached to pivoting display enclosure similar to the mouse apparatus of FIG. **94**.

[0114] FIG. **98**B shows a diagram of the display icon highlight sequence as each display icon is selected as the scroll wheel is scrolled down the list of available applications presented on the display screen.

[0115] FIG. **99**A shows a partial top view of a mouse apparatus with an integrated display screen (not shown) similar to the mouse apparatus of FIG. **92**.

[0116] FIG. **99**B shows a partial top view of a mouse apparatus with an integrated display screen (not shown) similar to the mouse apparatus of FIG. **86**.

[0117] FIG. **100** shows a perspective view of a wireless multiple host mouse apparatus that may operate across multiple host PCs.

[0118] FIG. **101** shows a perspective view of a multiple host mouse apparatus that uses a toggle switch to switch between two host PCs in a convenient and intuitive manner.

[0119] FIGS. **102**A-**102**C show isometric views of various wireless dongle designs, that may connect to a host PC when a multiple host mouse apparatus is used.

[0120] FIG. **103** shows an isometric view of a miniature USB mouse apparatus being connected to a USB extension cable.

[0121] FIG. **104** shows an isometric view of the miniature USB mouse apparatus illustrated in FIG. **103** being connected to a wireless dongle transmitter, the two components forming a wireless mouse.

[0122] FIG. **105** shows a perspective view of a cable-wired mouse apparatus being connected to a wireless dongle transmitter.

[0123] FIGS. **106**A-**106**C show an isometric view of hybrid (wired and wireless) dongle adapters, suitable for supporting the function of a multiple host mouse apparatus as shown in FIGS. **100-101** or a multiple host keyboard apparatus as shown in FIGS. **107-115** and FIG. **117**.

[0124] FIG. **107** shows a perspective view of a conventional keyboard attached to a host PC via a hybrid dongle.

[0125] FIG. **108** shows a perspective view of a wired multiple host keyboard apparatus with a switch to indicate the host PC to which the keyboard output (keystrokes) is directed towards.

[0126] FIG. **109** shows a perspective view of a dual keyboard apparatus containing two full sets of standard keys.

[0127] FIG. **110** shows a perspective view of a wired multiple host keyboard apparatus similar to the multiple host keyboard apparatus illustrated in FIG. **108** but with two different host PC connector ports.

[0128] FIG. **111** shows a perspective view of a hybrid multiple host keyboard apparatus that may support up to three (3) host PCs.

[0129] FIG. **112** shows a perspective view of a multiple host keyboard apparatus with an integrated remote control.

[0130] FIG. **113** shows a perspective view of a multiple host keyboard apparatus that can support multiple host PCs wirelessly.

[0131] FIG. **114** shows a perspective view of a multiple host keyboard apparatus that can support up to five (5) host PCs wirelessly.

[0132] FIG. **115** shows a perspective view of a multiple host keyboard apparatus with an integrated solar panel for powering the keyboard electronics and the wireless dongle transmitter (not shown).

[0133] FIG. **116** shows a perspective view of a multiple host keyboard apparatus similar to FIG. **112** with a wireless repeater puck that extends the range of the remote signal from the keyboard apparatus.

[0134] FIG. **117** shows a perspective view of a multiple host keyboard apparatus that supports Bluetooth and other mobile device wireless standards such as IR.

[0135] FIG. **118** shows a perspective view of a mouse apparatus with an integrated USB cable powered battery charger.

DETAILED DESCRIPTION OF INVENTION

[0136] Each mouse apparatus or keyboard apparatus shown in FIGS. **1-118** with a unique reference character should be understood to be an embodiment or further embodiment of the present invention.

[0137] The present invention discloses a computer mouse apparatus with an integrated Trackpoint™ device or a similar device that functions both as a cursor-pointing device or a scroll control device. The Trackpoint device may control both cursor and scroll movements in four directions: left, right, up, and down. As a scroll control device, the Trackpoint device may replace the scroll wheel mechanism common to computer mouse devices. As a cursor-pointing device, the Trackpoint device may function in conjunction with the optical motion sensor typically located at the bottom of computer mouse devices or it may replace the function of the optical motion sensor. The Trackpoint device used in the present invention may function similarly to any generic Trackpoint device available and not necessarily the Trackpoint device manufactured and used by IBM in its computers.

[0138] The present invention also discloses how multiple devices may share a common mouse enclosure, which may drastically reduce manufacturing, packaging, and distribution costs relative to individually packaged USB or PC card (PCMCIA slot) devices such as flash memory sticks, GPS receivers, mini hard drives, Wi-Fi adapters, and network hubs. Such use of a mouse enclosure saves on the overall costs since multiple separate devices commonly purchased by computer users can be integrated or built into the mouse enclosure. With the present invention, there is no need to install a separate wireless network adapter PCI card or PCMCIA card or standalone USB wireless adapter to the host PC. The wireless or Wi-Fi adapter is built-in into the computer mouse or keyboard.

[0139] In the present invention, USB-based devices can have embedded or removable memory in the keyboard or mouse to store, backup, update, and synchronize data files. For example, a RAM in the mouse with USB or wireless connection may be adapted as a convenient backup device to store data files. A flash memory reader or flash memory incorporated within a mouse may have 32-1024 Megs of memory for back-up and data portability. This approach enables the user to take a wireless adapter and mouse with a laptop to access additional devices without a lot of tangled cords or the inconvenience of attaching separate devices one at a time. Generally, connection to all devices will be through a common USB cable.

[0140] The computer mouse apparatus may be used by travelers who desire convenience and may also be made available in hotels, restaurants, parks, bars, and other public hotspots to allow patrons to access a wireless network.

[0141] The preferred embodiment of the present invention is an optical computer mouse with an embedded wireless adapter and with the computer mouse connected to its host PC by a USB connector. A USB hub or hub/bridge is also embedded within the mouse enclosure to allow the wireless adapter to share a single USB connection to the host PC. A Trackpoint device may be incorporated into the mouse enclosure to function as a cursor-pointing device and/or a window scroll control device. RAM memory and/or a flash memory card reader may also be incorporated into the mouse enclosure or the USB connector. The computer mouse apparatus, as a wireless device, incorporates the wireless adapter, memory, and memory card reader in either the base USB connector unit or the mouse enclosure.

[0142] It should be understood that the preferred embodiment of the present invention and the additional functionality as described and shown in the drawings may also be incorporated within a Keyboard Apparatus, a PC Speaker Apparatus, a PC Headset Apparatus, and similar devices. For example, the gas sensor of FIG. **39** may be similarly integrated into a Keyboard Apparatus, as may be the solar panel as depicted in FIG. **42**, the PMCIA slot of FIGS. **35-36**, the flash drive as shown in FIGS. **37-38**, the modules associated with FIGS. **32-34**, the device assignments control of FIG. **53**, the various architecture embodiments as shown in FIGS. **16**, **26-28**, **51**, the Wi-Fi adapter as shown in FIGS. **8-9**, and the like.

[0143] Although most of the figure drawings of the present invention display additional functionality related to a computer mouse apparatus, such additional functionality may be similarly integrated into a Keyboard Apparatus and other similar computer devices.

[0144] Turning now to FIG. **1**. FIG. **1** illustrates a top view of a PC compatible computer mouse apparatus **100** with an integrated Trackpoint™ or Trackpoint-style device **102**. The Trackpoint device **102**, with its associated hardware and software components, functions as a cursor-pointing device or a window scrolling device.

[0145] Also shown are a left-click button **104**, a right-click button **106**, and a wired connection **108** to a host PC, PDA, Tablet PC, or mouse-enabled device. The buttons **104**, **106** and Trackpoint device **102** are all embedded within the mouse enclosure **101**.

[0146] The Trackpoint device **102** resembles a finger pad visible on the surface of the mouse enclosure **101**, and four (4) strain gauges embedded within the mouse apparatus **100**, which serve as directional pressure sensitive sensors similar in function to the IBM Trackpoint device typically found on the keyboards of IBM branded laptop computers.

[0147] The direction and speed of the cursor on the display screen is controlled by the amount of pressure and its orientation on the non-slip Trackpoint-style device. The speed at which the cursor-pointer moves, or the window contents scroll, corresponds to the pressure applied by the user to the Trackpoint-style device. Pointing, selecting, and dragging

with the Trackpoint sensor are part of a single process that can be performed without the user moving his or her fingers away from the Trackpoint finger pad.

[0148] The smooth functioning of the Trackpoint device **102** is supported by a software control algorithm so users can move the cursor, select icons or texts, and scroll software contents within a window in a quick, accurate, and comfortable manner.

[0149] The Trackpoint device **102** may be based on any sensor capable of sensing force or pressure applied by the user (typically using fingertip pressure) in the four directions (left, right, up, and down) representative of movement on the display screen. The Trackpoint device **102** may also enable the use of buttons, left-clicks, right-clicks, and double-clicks of the types used in window-based graphical user interfaces.

[0150] The Trackpoint device **102** may function as a cursor-pointing device to complement the cursor-pointing function of the optical motion sensor **103** (shown in FIG. **3**) located at the bottom of the mouse enclosure **101**. The Trackpoint device **102** may also function as a window scrolling control device similar to the function of a scroll wheel in a conventional PC mouse. The Trackpoint device's function is chosen by adjusting the mouse configuration settings. A button (not shown) located on the mouse enclosure **101** may also toggle between the Trackpoint device's two functions.

[0151] The Trackpoint device **102** may also incorporate control software and/or additional sensors to control the display cursor movement or the window scroll direction of a 3D display and its associated graphical user interface.

[0152] FIG. **2** is a variation of the computer mouse apparatus as illustrated in FIG. **1**.

[0153] FIG. **2** illustrates a top view of a computer mouse apparatus **110** with a Trackpoint sensor **112** in a location alternative to that shown in FIG. **1**. The alternative location of Trackpoint device **112** permits the index fingertip of a right-handed user to easily reach the sensor. Another Trackpoint device alternative location **113** is also shown between the left-click button **114** and right-click button **116**.

[0154] Also shown are a left-click button **114**, a right-click button **116**, and a wired connection **118** to a host PC, PDA, or mouse-enabled device. The buttons **114**, **116** and Trackpoint device **112** are all embedded within the mouse enclosure **111**.

[0155] FIG. **3** illustrates a side view of the computer mouse apparatus **100** illustrated in FIG. **1**.

[0156] Electronic components for the Trackpoint device **102** and the remaining mouse electronics are located on a printed circuit board (PCB) **105** within mouse enclosure **101**. Also shown is a bottom motion sensor area **103** typically associated with an optical or mechanical mouse.

[0157] FIG. **4** illustrates a front view of the computer mouse **100** as depicted in FIG. **1**. It shows Trackpoint device **102**, a left-click button **104**, a right-click button **106**, and a wired connection **108** to a host PC, PDA, or a related computer device. The buttons **104**, **106** and Trackpoint device **102** are embedded within the mouse enclosure **101**.

[0158] FIG. **5** is a variation of the computer mouse apparatus as illustrated in FIG. **1**.

[0159] FIG. **5** illustrates a top view of a computer mouse **120** with a Trackpoint sensor **122** and a mouse scroll wheel **127**. Also shown are a left-click button **124**, a right-click button **126**, and a wired connection **128** to a host PC, PDA, or mouse-enabled device. The buttons **124**, **126** and Trackpoint sensor **122** are embedded within a mouse enclosure **121**.

[0160] The Trackpoint device **122** and the mouse scroll wheel **127** may be programmed to serve different functions. For example, the left Trackpoint sensor **122** may be programmed to scroll the contents of the active window left, right, up, and down. The mouse scroll wheel **127** may be programmed for application-specific tasks, such as rotating an image in Adobe Photoshop or zooming in or zooming out of an object in a CAD/CAM program.

[0161] FIG. **6** is a variation of the computer mouse apparatus as illustrated in FIG. **5**.

[0162] FIG. **6** illustrates a top view of a cordless computer mouse **130** with a mouse scroll wheel **137** and a Trackpoint device **132** in an arrangement alternative to that of FIG. **5**.

[0163] Also shown are a left-click button **134** and a right-click button **136**. The buttons **134**, **136** and Trackpoint device **132** are all embedded within a mouse enclosure **131**.

[0164] The mouse electronics includes a wireless connection to a host PC, PDA, or mouse-enabled device via a wireless communications technology. Such a technology may be proprietary or an industry standard such as Bluetooth, Wi-Fi, WiMax, or an optical IR infrared port.

[0165] FIG. **7** is a variation of the computer mouse apparatus illustrated in FIGS. **5** and **6**.

[0166] FIG. **7** illustrates a top view of a cordless computer mouse apparatus **140** with two Trackpoint devices **142**, **143**, a function button **145**, and a flash memory card reader slot **147**. The memory card is inserted into the card slot **147** and rests within the memory card housing **148** until it is removed by the user.

[0167] Also shown are a left-click button **144** and a right-click button **146**. The buttons **144**, **146** and Trackpoint devices **142**, **143** are all embedded within the mouse electronics housing **141**. The two Trackpoint devices **142**, **143** may be programmed to serve different functions. For example, the left Trackpoint device **142** may be programmed to scroll the contents of the active window left, right, up, and down. The right Trackpoint device **143** may be programmed for application-specific tasks, such as selecting a range of cells in Microsoft Excel, selecting a range of text in a Microsoft Word document, or moving the object nearest the cursor left, right, up, or down.

[0168] Removable digital memory products include memory card products such as Secure Digital (SD), mini SD, multimedia cards (MMC), compact flash and other flash memory products. Removable memory devices are typically utilized in digital cameras, mobile phones, music players and other consumer electronics that use the removable memory cards to store and transport data. Memory cards come in postage-stamp and matchbook sizes and currently use flash memory. However, other memory technologies such as magnetic random access memory (MRAM) are in development. MRAM will be able to store a substantial amount of data, consume little energy, and operate faster than conventional flash memory. The computer mouse apparatus of the present invention anticipates the use of this type of memory technology. Also becoming increasing popularly as a mass storage media for devices such as digital cameras, camcorders, and USB sticks, are non-volatile flash memories. The most advanced nonvolatile flash memory devices available today can permanently store one or two bits of information per memory cell without a supply voltage. Such memories have a feature size of around 90 nanometers, and shrinking this feature size to half using typical techniques has posed many problems because of nanoscale physical effects. The largest

flash memory chips currently available exceed 1 GB and as costs drop, such devices may be incorporated into more electronic devices.

[0169] FIG. **8** is a variation of the computer mouse apparatus as illustrated in FIG. **1**.

[0170] FIG. **8** illustrates a top view of a computer mouse **150** incorporating a Trackpoint sensor **152** and a built-in Wireless communications adapter module **155** with an internal antenna **153**.

[0171] Also shown are a left-click button **154**, a right-click button **156**, and a wired connection **158** to a host PC, PDA, or mouse-enabled device. The buttons **154**, **156** and Trackpoint device **152** are all embedded within a mouse enclosure **151**.

[0172] A module, as the term is used in the foregoing, refers to electronics circuitry designed to perform a specific function. Hence, a Wi-Fi module refers to electronics circuitry designed to transmit and receive a Wi-Fi signal and to communicate the processed input and output data to a secondary device or application on the host PC. Its electronics circuitry may require EMI shielding to prevent signals from the wireless adapter's internal or external antenna from disrupting the electronics of other devices within the mouse enclosure.

[0173] The wireless communications adapter module **155** enables the host PC to support and communicate in one or more wireless technologies such as Wi-Fi, Bluetooth, WiMax, 2G, 2.5G, 3G, GSM, TDMA, CDMA, PCS, GPRS, WAP, GPS, mesh networks, satellite radio & video, AM, FM, FRS, RFID, ZigBee, optical IR, and the like. The signals may be received from a cellular network or from nearby Wi-Fi, WiMax, or Bluetooth hotspots.

[0174] Typically, the wireless adapter **155** includes support for Wi-Fi connectivity. Wi-Fi is also known as 802.11 in the IEEE standards and comes in a number of evolved variants such as 802.11a, 802.11b, 802.11g and the like. The range of the Wi-Fi signal is typically 75-300 feet. Handheld devices and other computers with wireless networking capability can access the host PC via the Wi-Fi adapter **155** embedded within the computer mouse apparatus **150**. Intel manufactures chips that integrate the growing number of wireless technologies including Bluetooth, WiMax, and Wi-Fi, and permit detailed graphics on small devices.

[0175] A wireless adapter is used to establish a wireless network with other PCs and peripheral devices using at least one wireless standard. In order for the wireless communications module **155** to function as the wireless adapter for a host PC with no existing wireless communications ability, a wired connection **158** from the wireless adapter embedded in computer mouse apparatus **150** to the host PC or device is needed. This wired connection **158** may be based on any suitably supported connector type and data transfer standard. The various embodiments of a computer mouse with an integrated wireless adapter module will typically connect to its host PC via a single USB connector **175** (shown in FIG. **10**). Any suitable connector style or data bus standard may be used such as USB 2.0/1.1, FireWire 400/800/1394a/1394b, serial, and parallel connectors.

[0176] USB 2.0 and FireWire 800 are both backward compatible. Hence, if the computer mouse apparatus **150** is attached to a system with only USB 1.1 or legacy FireWire 400/1394a ports, the embedded devices will still be able to function at the fastest possible speed available.

[0177] A button or switch can be incorporated within the mouse enclosure **151** which functions to toggle the wireless connection to an enabled or disabled state for added convenience and security. A multi-colored LED may also be incorporated within the mouse enclosure **151** to indicate status information or whether or not wireless data is incoming, outgoing, or both (green, red, or yellow LED indicator light respectively) via the built-in wireless adapter **155**.

[0178] FIG. **9** is a variation of the computer mouse apparatus illustrated in FIG. **8**.

[0179] FIG. **9** illustrates a front view of a computer mouse apparatus **160** with a mouse scroll wheel control **162**, a USB plug **165**, a USB jack or port **167**, and a built-in wireless communications adapter module (not shown) with its associated external antenna **163**. An external antenna **163** may be more suitable to wireless environments where antenna orientation, size, and obstruction are important considerations. The external antenna **163** may be pivoted to help aim in the right direction.

[0180] Also shown are a left-click button **164**, a right-click button **166**, a wired connection **168** to a host PC, PDA, or mouse-enabled device. The buttons **164**, **166**, antenna **163**, and Trackpoint device **162** are all embedded within a mouse enclosure **161**.

[0181] Turning now to FIG. **10**. FIG. **10** illustrates a side view of the computer mouse apparatus **150** as illustrated in FIG. **8**. The electronics of the mouse and the wireless communications adapter module **155** may be on a common PCB board **179** or on separate printed circuit boards.

[0182] If the Trackpoint device **152** is not enabled to control the position of the cursor on the host PC's display, then a separate motion sensor **177** is needed to serve the cursor-pointing function of the mouse. Typically, a cursor-pointing motion sensor **177** on a PC mouse is based on optical sensors or mechanical sensors to detect the motion of the mouse.

[0183] In the computer mouse apparatus of the present invention, it is expected that both a dedicated cursor-pointing motion sensor **177** and a Trackpoint device **152** that may be configured (through hardware jumpers or miniature switches or software preference settings) to serve the same function in a complementary dual use manner are present. Furthermore, the Trackpoint device **152** and/or the separate motion sensor **177** may be assigned the window scroll function which permits the contents of the active window within a Windows-style operating system to be moved to the left, right, up, or down.

[0184] The Trackpoint device **152** and/or the separate motion sensor **177** may also be assigned a zoom control function which permits the contents of the active window to be zoomed in or out or magnified more or less. The flexibility of assigning specific functions to the Trackpoint pressure sensor **152** and the mouse motion sensor **177** gives the computer mouse apparatus **150** of the present invention added functionality. For example, either or both sensors may be assigned the task of rotating or moving an object in a CAD/CAM or 3D application, moving an active window or icon within the displayed area of a Windows-style operating system, and other tasks often accomplished via a drag-and-drop operation, a select operation, a cursor move, a mouse scroll wheel operation, or a scroll bar or slider operation.

[0185] The use of an optical sensor typically located at the bottom of a conventional mouse may reduce mechanical components and, thus, improve the mouse's performance and reliability. A cordless mouse using RF technology has been used to reduce the intermittent failures generally associated with the wear and tear on a corded or wired mouse. On the remaining surfaces, however, the buttons and wheel are still

mechanical. Optical sensors and strain gauges may be used to reduce the mechanical components. Optical- or LED-based switches may be used to replace mechanical contact style switches commonly used on a computer mouse. Where the conventional mechanical mouse is used, the switch can be mounted on a flexible circuit board or one with cut sections to reduce the amount of pressure that may be applied to such buttons, thus improving their time to failure or intermittent operation. This method is discussed further in FIGS. **57-58**. Other means for shock absorption is discussed in FIGS. **44***a*-**46***b*.

[0186] A control algorithm may be designed such that when a pressure is sensed at or above the threshold pressure, the switch will not move the mouse cursor until a period of time has passed to allow the mechanical motion of the mouse to not affect the cursor placement and its associated double click. The mouse may also sense the mechanical double click from the user but it will substitute a conditioned signal in lieu of the mechanical signal of the user.

[0187] FIG. **11** is a variation of the computer mouse apparatus as illustrated in FIG. **8**.

[0188] FIG. **11** illustrates a perspective view of a wireless computer mouse apparatus **182** with a Trackpoint device and a companion wired base unit **180** with an embedded wireless communications adapter module and its internal antenna **181**. The base unit **180** is connected to the host PC via a suitable connector such as a USB connector **185**.

[0189] A connect button **188** on the base unit **180** serves to reset wireless communications to the wireless mouse **182**. LED indicators **183**, **184** show status information and reception and transmission of wireless data. Extra serial bus ports such as USB 2.0 port **186**, and FireWire port **187** permit other devices such as flash memory devices to be connected to the host PC via the base unit **180** and its built-in USB hub/bridge.

[0190] The shared USB wired connection **158** permits a Wi-Fi, 3G, GSM, or Bluetooth wireless adapter to be embedded within the mouse enclosure **151** (as shown in FIG. **10**) rather than being installed in the host PC or connected externally to the host PC as a separate device. For the wireless computer mouse apparatus **182**, the wireless adapter can be built-in into the mouse's companion base unit **180**.

[0191] The wireless computer mouse apparatus **182** communicates to the wired base unit **180** using a wireless standard. The wired base unit **180** includes an embedded Wi-Fi adapter and antenna **181** and a USB hub connected to the host PC via a USB connector **185**. The wireless computer mouse apparatus **182**, thus, may use the same Wi-Fi standard signals to communicate mouse data to the base unit **180**.

[0192] The wireless computer mouse apparatus **182** communicates motion sensor, button, and Trackpoint pressure data to the wireless adapter **181** using a suitable wireless signal (such as a Wi-Fi standard signal). The wireless computer mouse apparatus **182** may also communicate to the base unit **180** using a proprietary wireless signal. If a separate wireless standard is used for communicating the wireless data **189** from the wireless computer mouse apparatus **182** to the base unit **180**, the wireless adapter **181** need not receive nor transmit the mouse specific data. Rather, separate communications circuitry associated only with the mouse data component are used.

[0193] FIG. **12** is a variation of the computer mouse apparatus as illustrated in FIG. **11**.

[0194] FIG. **12** illustrates a perspective view of a wired computer mouse apparatus **190** with an embedded Trackpoint device and an in-line electronics and connection unit **191**, which incorporates an integrated wireless network adapter module and its external antenna **193**.

[0195] As shown in FIG. **12**, the computer mouse apparatus **190** is attached to the in-line electronics and connection unit **191**. The wireless network adapter is built-in into the in-line connection unit **191** and is used to establish communications using a wireless network to PCs and peripheral devices. The wireless adapter and the mouse data share a single common point of connection to the host PC. A USB connector **194** is the preferred connection means to the host PC. The external antenna **193** may be rotated **195** essentially along the connection unit **191** for better signal strength or for convenient storage.

[0196] FIG. **13** is a variation of the computer mouse apparatus as illustrated in FIG. **8**.

[0197] FIG. **13** illustrates a top view of a computer mouse apparatus **200** with a Trackpoint sensor **202** and an internal group of peripheral devices which include a mini hard drive **205**, a wireless communications (for example, Wi-Fi standard) adapter module **203**, flash (e.g. RAM, ROM) memory **209**, and a flash memory card reader **207**. The various embedded peripheral devices **203**, **205**, **207**, **209** may be plug-and-play devices or the driver software may be stored on the embedded or removable memory within the mouse enclosure.

[0198] Also shown are a left-click button **204**, a right-click button **206**, and a wired connection **208** to a host PC, laptop notebook, PDA, Tablet PC, or SmartPhone. The buttons **204**, **206** and Trackpoint device **202** are all embedded on the mouse enclosure **201**. A PC card slot or PCMCIA slot may also be incorporated into the mouse enclosure **201**, thus allowing any device which functions in a PCMCIA slot to be conveniently attached to the host PC.

[0199] The mini hard drive was introduced by IBM in the mid-1990s. Recently, mini hard drives have been further popularized by Apple Computer as used in its iPod and iPod Mini portable music players. Mini hard drives from companies like Cornice, Hitachi, Toshiba and others hold lesser data than standard hard drives. Typical capacities range from 1.5 GB to 4 GB. They are also smaller, measuring 1-2 inches across. In the second quarter of 2005, Hitachi introduced a 2.5-centimeter wide hard drive found inside some portable music devices that can hold up to 6 GB or 6 billion bytes of data. The company appraises that a device of the same size will be able to store 60 GB using perpendicular recording. IBM has shown off a working prototype of a ultra-high density storage technology dubbed "Millipede" that could cram in the equivalent of 25 DVDs in a space no larger than a postage stamp. As with most memory devices, mini hard drive capacity is expected to increase over time. Such mini hard drives may be adapted to store data files over a USB cable or wireless connection.

[0200] FIG. **14** is a variation of the computer mouse apparatus as illustrated in FIG. **13**.

[0201] FIG. **14** illustrates a top view of a computer mouse apparatus **210** with a TouchPad™ cursor-pointing and/or scrolling device **212** or a similar device, and internal peripherals which include a mini hard drive **215**, flash memory **219**, and a flash memory card reader module **217**.

[0202] Also shown are a left-click button **214** and a right-click button **216**. The buttons **214**, **216** and Touchpad cursor-pointing and/or scrolling device **212** are all embedded within the mouse enclosure **211**. The Touchpad device used in the present invention may function similarly to any generic

Touchpad device available and not necessarily the Touchpad device manufactured by Synaptics.

[0203] The computer mouse apparatus **210** and its peripheral devices may communicate to the host PC, PDA, or computer device using a wired or wireless connection. Data from the mouse and the embedded peripheral devices to a single wired or wireless connection may be multiplex or may be received and transmitted according to a suitable network standard specification. When a mouse is being used in a multiplex transmission, the mouse functions may be given priority or additional resource time to increase its performance.

[0204] FIG. **15** is a variation of the computer mouse apparatus as illustrated in FIG. **14**.

[0205] FIG. **15** illustrates a top view of a computer mouse apparatus **220** with a 5-way navigation button **222**. Also shown is a group of internal peripheral devices housed within the mouse enclosure **221**, which includes a mini hard drive **225**, flash memory **228**, and a flash memory card reader module **227**. There are also a left-click button **224** and a right-click button **226** embedded on the mouse enclosure **221**. The computer mouse apparatus **220** and its peripheral devices may communicate to the host PC, PDA, or computer device using a wired or wireless connection.

[0206] The 5-way navigation button **222** may be used to scroll the contents of an active window, navigate menu items on a display, or serve as a cursor-pointing device. Such 4- or 5-way navigation buttons are also utilized on mobile phones, digital cameras & camcorders, and PDA devices such as the HP iPAQ Pocket PC h4350 Series. The navigation button also scrolls through lists, positions the cursor, accesses shortcuts, opens applications such as browsers, email, and Instant Messenger, and lists network devices.

[0207] The 5-way navigation button **222** contains a center button **223** which functions as a select or enter key. The center button **223** may also be assigned a specific function. A range of functions may also be programmed into the buttons **224**, **226**, **222**, **223** in a context-sensitive manner according to the program application the mouse actions are associated with.

[0208] Turning now to FIG. **16**. FIG. **16** illustrates a representative system architecture block diagram for the computer mouse apparatuses and their associated peripheral devices as depicted in FIGS. **8** to **15**, and FIGS. **17** to **25**.

[0209] Embedded within the mouse enclosure are electronics that serve the operational requirements of each embedded device such as the built-in memory (for example, flash RAM, ROM, and/or a mini hard drive) **233**, the external memory card or SIM card reader **234**, the computer mouse and its sensor electronics **236**, and the wireless communications adapter (for example, a Wi-Fi, WiMax, 3G, GSM, GPRS, and/or Bluetooth adapter module) which serves to enable the host PC to communicate with other wireless devices and computers.

[0210] If the computer mouse is attached to a host PC or computer device via a USB connection or similar cable connection **238**, a multiple port USB network hub module **232** is embedded within the mouse enclosure and serves to network the embedded devices to the host PC. The electronics and configuration of the hub/bridge device and/or the embedded peripheral devices may require modification to work optimally through the network hub/bridge module **232**. Typically, standalone mouse and scanners need to be connected directly to one of the host PC's USB ports and will fail to operate if connected through a hub.

[0211] Thus, for a USB or serial connector mouse, the wireless adapter module **235** serves to provide the host PC with the capability to communicate with other wireless devices and other computers within the wireless network. The wireless adapter **235** is connected to the host PC via the internal network hub module **232**. Settings for the mouse electronics and other embedded peripheral devices are adjusted through the host PC operating system and display device.

[0212] The operations of the wireless adapter module **235** and USB hub module **232** are different if the mouse is wirelessly connected to the host PC and no cable connection is present. If the computer mouse and the other embedded devices connect to the host PC or computer device using a wireless connection (for example, using a Wi-Fi, WiMax, Bluetooth, and/or a 3G standard), it is implied that the host PC already has some wireless capability to receive data from and to transmit data to the wireless mouse. Thus, the wireless adapter module **235** does not serve to give the host PC its basic wireless capabilities, but rather may enhance it by giving the host PC wireless capability at a different frequency band or with a different technology standard.

[0213] In the case of a wireless mouse, the primary function of the wireless adapter **235** is to enable the computer mouse data and the embedded peripheral device data to communicate wirelessly with the host PC or with other electronic devices within one or more established wireless networks.

[0214] In the case of a wireless mouse, the primary function of the USB network hub module **232** is to enable the computer mouse data and the embedded peripheral device data to communicate through the embedded wireless adapter module **235** with the host PC or other electronic devices within one or more established wireless networks. An On-The-Go USB bridge controller chip is used to give USB connectivity to embedded devices without the need for a USB connection to a host PC.

[0215] The USB On-the-Go chip such as Philips ISP1361, ISP1261, and ISP1262 enables portable devices to transfer data directly to another peripheral device without first having to connect to a PC. The USB On-the-Go spec, released in December 2001, is an addendum to the broadly implemented USB 2.0 standard. The supplemental spec allows direct connectivity between mobile handsets or portable consumer appliances without the aid of a host PC. Those conforming to the USB On-the-Go spec can dynamically set up a master-slave relationship between devices.

[0216] The power supply **237** provides a suitable voltage and current for the mouse electronics and the other peripheral electronic devices placed within the mouse enclosure. Power to the electronics may be from batteries housed within the mouse enclosure (if the mouse apparatus **230** is cordless) or may be supplied from the USB connector or an equivalent connector and its associated cable **238**. If the batteries are rechargeable, they may be recharged by an AC/DC recharger unit attached to a wall receptacle or from the powered USB connection cable. The multi-function mouse apparatus of the present invention incorporates USB host capability, for example, by utilizing an OTG bridge controller chip.

[0217] The OTG chip is incorporated in FIG. **16** and FIG. **28**. The 4 Port USB Hub/Bridge **232** in FIG. **16** and the USB Hub/Bridge **351** in FIG. **28** are equivalent. Normally, the USB Hub chip and the USB OTG chip (which acts as the USB bridge) are separate pieces of hardware (e.g. the Motorola USB Hub chip and the Philips USB OTG chip). However,

they are shown in the drawings as a single block **232**, **351** as the two functions (hub and bridge) may be integrated into a single piece of hardware such that there is no need to add a block for the USB OTG chip.

[0218] Note that the USB OTG chip (if packaged separately from the USB hub chip) only adds "bridging" capabilities to the mouse. Without the USB OTG chip, the mouse will still function as a USB hub and as a Wi-Fi access point. With the USB OTG chip, the mouse can function as a "bridge"—allowing two USB peripherals to communicate and transfer data without the need for a host computer.

[0219] Each computer mouse variation shown in FIGS. **1-15** and FIGS. **17-25** may contain one or more of the following devices: a mini hard drive, embedded or removable memory, flash memory, RAM, ROM, or MRAM, a wireless communications adapter suited for operation on one or more wireless standards, a USB or network hub, a USB on-the-go bridge controller device, an encryption chip or hardware, digital signal processing devices, audio/video components and processing circuitry, modem circuitry, and one or more CPU processors and supporting chipsets. Such devices may function individually and/or in combination with the remaining embedded devices, sensors, and electronics to add to or enhance the function of the computer mouse apparatus.

[0220] An encryption chip can be embedded within the mouse enclosure to decrypt and encrypt data files, store and manage such files on external or internal memory, and permit access to a network such as the Internet via proprietary and secure protocols which may be protected by software passwords, hardware, and biometric devices.

[0221] Other devices that may be embedded within the computer mouse apparatus include various connectors such as a RS-232 Port, an on/off switch, a temperature sensor, a gas sensor such as a CO, CO2 sensor, a smoke detector, a heat detector, a pulse monitor, a barometer, an equipment Status or Parameter status display, a blood pressure monitor, a network remote control, a microphone, a speaker, a telephone modem, a cable modem, a DSL modem, an IR remote control, a telephone keypad and headset connector, an RFID tag reader, a bar code reader, a printer port, a calculator, a timer, a mobile phone, an SMS/MMS text device, a pager, a clock, a TV monitor, a battery, a battery recharger, a voice-recognition chip, an MP3 player, a digital audio recorder, an AM/FM/SW radio, and a built in 916 MHz Transceiver. Further optional peripheral devices that may be embedded within the mouse apparatus are a solid state compass, atomic clock, super accurate clock, Wi-Fi module, PABX indicator, pager, mobile phone SIM, SMS device, projector, and smoke detector.

[0222] Turning now to FIGS. **17** to **25**. The computer mouse electronics and additional mouse-embedded devices (for example, the built-in memory, mini hard drives, and the wireless communications adapter depicted in FIGS. **13-16**) are typically connected to and seen by the host PC as a number of distinct peripheral devices. These devices are connected to the host PC using a USB cable connection or an equivalent wired or wireless network connection. The computer mouse's embedded peripheral devices support the function of the host PC by serving as distinct peripheral devices with distinct purposes such as a computer mouse, an external memory storage device, an external hard drive, and an external wireless adapter module.

[0223] It should be understood that a CPU processor and its associated chipsets or a system-on-a-chip device may be utilized within the computer mouse apparatus. Such a CPU processor or system chip may serve to manage computer processing tasks within the mouse enclosure rather than relying solely on the host PC's processing power. Thus, a mouse apparatus may run a proprietary OS, a Palm OS 3, 4 or 5, Pocket PC, SmartPhone, PalmSource, Symbian, Java, Microsoft, and Linux operating systems or any desktop O/S such as Windows XP.

[0224] In practical terms, a built-in CPU processor or system chip would enable the mouse electronics and the remaining embedded devices (for example, a mini hard drive, memory, input/output support and connectors, USB network hub or USB OTG bridge controller chip, wireless communications adapter, and the like) to function as a small self-contained computer. Such a device may store and run software applications, function as a distinct unit similar to a PDA, mobile phone, MP3 player, serve as a network device providing input or output support for other devices in a network, and still provide cursor-pointing and windows scroll control for an externally connected PC, PDA, or related computer device.

[0225] Similarly, the devices depicted in FIGS. **17-25** may be configured to function as a wired or wireless network mouse (as shown in FIGS. **53-54**). The mouse or keyboard can have a network connection and can therefore access or provide input to a number of target devices connected to the network, not just the host PC. The mouse cursor will appear on whichever target device/display the mouse controls have been assigned to.

[0226] A network mouse is capable of transmitting input signals to and receiving output signals from a range of network addressable (for example, Internet Protocol devices) devices within a wired or wireless network. The selection of the network device which the mouse actions may have immediate effect upon may be selected via a menu list displayed on the built-in integrated display **245** or on the monitor display associated with the host PC or network selected device. A button (not shown in FIG. **17**) on the network mouse enclosure **241** may toggle the mouse's target device between a default device such as the host PC and a second device (for example, a Server PC).

[0227] A wireless network mouse with an integrated display may use a number of wireless standards such as Bluetooth for short range networking and WiMax for wide-area networking. The display screen may, for example, display a list of target devices to which the mouse may interact within one or more wired or wireless networks. The user may select which target device in the displayed list the mouse will interact with and the buttons and display on the mouse are used to change the target to other devices on the list.

[0228] Conventional USB peripherals require a "host-peripheral" configuration wherein a computer acts as the host and USB peripherals act as passive devices. With the advent of the USB On-The-Go (OTG) specification, products that have been traditionally peripherals only (e.g. digital cameras, digital audio players, mobile phones, etc.) now have the capability to act as host to other USB peripherals. This means that devices compliant with the USB OTG specification can act as a "communication bridge" between two USB devices, without the need for a host computer. USB OTG capabilities can be added to current USB compliant products by adding a controller chip, such as Philips' ISP1261 and ISP1262 bridge controller chips, which can either be integrated on the circuit board or designed as an external "dongle".

[0229] Most computers, laptops, and late model PDAs have a built-in USB host capability. The multi-function computer mouse apparatuses of FIGS. **8-15** and **17-25** may incorporate USB host capability. Such capability can be provided, for example, by utilizing an OTG bridge controller chip. With USB host capability built-in into a computer mouse **200** (as in FIG. **13**), a flash memory card attached to a USB port or card reader **207** may store data to or retrieve data from the memory card utilizing the computer mouse's built-in wireless communications module **203**.

[0230] Turning now to FIG. **17**. FIG. **17** illustrates a top view of a computer mouse apparatus **240** with a Trackpoint sensor **242**, a small display **245**, a flash memory card slot or SIM card reader **247**, and a digital camera or webcam **249**.

[0231] Also shown are a left-click button **244**, a right-click button **246**, a hinged display enclosure **243**, and a wired connection **248** to a host PC, PDA, or mouse-compatible device. The buttons **244**, **246** and Trackpoint device **242** are all embedded on the mouse enclosure **241**.

[0232] The preferred display **245** is a small black & white or color display of the type found on mobile phones and digital cameras. The display may also be an LCD or LED multi-segment display of the type found on calculators. The display technology may be of any commercial type including OLED and e-Ink technology. The display **245** may also be a dual screen display, a transflective display, or incorporated with touch screen capability. Small 1.8 inch LCD screens are available from such companies as Samsung.

[0233] Where privacy is a concern, 3M has a screen technology that prevents the display contents from being seen from the side, thus, protecting data from the prying eyes of strangers. The 3M privacy screens may be installed over the mouse display **245** or built into the display itself.

[0234] A mouse with a display and webcam or a stand alone network mouse may also play a role in the intelligent home and home networks of today in order to control a number of devices from one convenient place. For example, computer mouse apparatus **240** may screen visitors at the front door and permit entry at the touch of a mouse button. The computer mouse apparatus **240** may also select home entertainment options from items and menus displayed on home TV monitors or on the mouse's own embedded display **245**.

[0235] The display **245** may be used in association with the digital camera/webcam **249** on the mouse **240** to initiate or receive video conference calls. A built-in microphone and speaker **263** on mouse **240** as shown in FIG. **19** (or the use of a PC/VOIP headset connector on the PC or mouse) enables audible communication.

[0236] The computer mouse apparatus **240** may display email and inter-office communication, images, and reminders, and may also serve as a pager and alert device. Such activities may be present on the mouse display **245** and interacted with even when the host PC or its monitor display is turned off.

[0237] The computer mouse apparatus **240** with the embedded Trackpoint device **242** may be configured as a wired or wireless device. In a wired configuration, the power may be supplied via the wired connection **248** or internal batteries. In a wireless configuration, the power may be supplied via an AC/DC adapter or by internal batteries. In a wired configuration, any wireless communications adapter may serve to add wireless capability to the host PC or a network device. In a wireless configuration, the wireless communications adapter serves to use this capability to enable the devices embedded within the mouse enclosure **241**, such as the mouse electronics and the built-in memory storage devices, to communicate with and support the host PC or a network device.

[0238] The computer mouse apparatus **240** may also contain any one or more of the following embedded devices: RAM memory, ROM memory, a mini hard drive, a wireless communications adapter, a network hub or bridge, a CPU and its associated circuitry, and a power supply. The embedded devices may function as peripheral devices connected via a USB or network connection to a host PC and under the control of a host PC. With the addition of a built-in CPU and its associated circuitry within the mouse enclosure **241**, the embedded devices and CPU may be integrated into an autonomous computing device with wired or wireless connectivity to other computing devices on a network.

[0239] FIG. **18** is a variation of the computer mouse apparatus as illustrated in FIG. **17**.

[0240] FIG. **18** illustrates a top view of a computer mouse apparatus **250** with a Trackball cursor-pointing and/or window scrolling device **252**, a display **255**, a SIM card reader or flash memory card reader **257**, a digital camera or webcam **259**.

[0241] Also shown are a left-click button **254**, a right-click button **256**, a hinged display enclosure **253**, and a wired connection **258** to a host PC, PDA, or mouse-compatible device. The buttons **254**, **256** and Trackball device **252** are all embedded on the top of mouse enclosure **251**.

[0242] When a Trackball device **252** is used in a mouse **250**, the Trackball device **252** serves as the mouse's motion sensor and therefore is used for the mouse's cursor-pointing function. When a Trackball device **252** is used, the mouse **250** position is typically held stationary as there is no motion sensor at the bottom of the mouse. However, with the added functionality present in the computer mouse **250**, a bottom-mounted motion sensor may be used for the cursor-pointing function to complement or replace the cursor-pointing function of the Trackball device **252**. This variation enables the Trackball device **252** to be used in other ways such as a scroll control device to move the contents of an active window, or as a menu selection device to select an item from a list displayed on the computer mouse display **255**.

[0243] The computer mouse **250** with the embedded Trackball device **252** may be configured as a wired or wireless device. In a wired configuration, the power may be supplied via the wired connection **258** or internal batteries. In a wireless configuration, the power may be supplied via an AC/DC adapter or by internal batteries. In a wired configuration, any wireless communications adapter may add wireless capability to the host PC or a network device. In a wireless configuration, the wireless communications adapter uses this wireless capability to enable the devices embedded within the mouse enclosure **251**, such as the mouse electronics and the built-in memory storage devices, to communicate with and support the host PC or a network device.

[0244] The computer mouse **250** may also contain any one or more of the following embedded devices: RAM memory, ROM memory, a mini hard drive, a wireless communications adapter, a network hub or bridge, a CPU and its associated circuitry, and a power supply. The embedded devices may function as peripheral devices connected via a USB or network connection to a host PC and under the control of a host PC. With the addition of a built-in CPU and its associated circuitry within the mouse enclosure **251**, the embedded devices and CPU may be integrated into an autonomous com-

puting device with wired or wireless connectivity to other computing devices on a network.

[0245] FIG. **19** illustrates a side view of computer mouse apparatus **240** as depicted in FIG. **17** showing an integrated speaker and/or microphone element **263**, a network connector **260**, a printed circuit board for the mouse apparatus electronics **262**, and a cursor-pointing motion sensor area **261**.

[0246] Also shown are a Trackpoint device **242**, a display **245**, a flash memory card reader or a SIM card reader **247**, a digital camera or webcam **249**, a left-click button **244**, and a wired connection **248** to a host PC, PDA, or computer-related device.

[0247] The display **245** is housed within a hinged display enclosure **243** which is attached to the mouse enclosure **241**. The hinged display enclosure **243** is normally positioned in a horizontal manner as indicated by phantom line representation **138**, but may be rotated or pivoted upward as indicated by direction arrow **139** depending on the user's preference or to reduce overhead glare and improve the quality of the display **245** image and the webcam **249** image capture.

[0248] The built-in network connector **260** enables the computer mouse apparatus **240** to access other devices on a network and receive output data from such devices which may be displayed and interacted with on the mouse's built-in display **245**. The computer mouse apparatus **240** may also interact with these network devices by sending control signals to the devices directly via the network connector **260**.

[0249] The network connector **260** may be any suitable network connector such as an Ethernet-style connector or a USB connector. Additional input and output connectors may be present, such as an IEEE 1394 FireWire or i.LINK connector, an S-Video input/output connector, a digital component video connector, a microphone input and/or a PC headset connector, and an optical audio/video input or output connector.

[0250] A built-in microphone and/or speaker **263** enables the computer mouse apparatus **240** to serve as a VOIP-enabled device to conduct or participate in audio and/or video teleconference calls and to communicate with colleagues without the use of a stand alone telephone. The microphone **263** may be disabled in instances where the user chooses to only monitor a conference call or in-house communication. Set-up and participation in such teleconference calls may be facilitated by software installed on the host PC or the computer mouse apparatus **240**. The Trackpoint device **242**, display **245**, and webcam camera **249** may facilitate the set-up and configuration process and provide video images to all the video teleconference participants.

[0251] The computer mouse apparatus **240** may be interfaced to audio and video conferencing services and avail of Internet Protocol for company-level collaboration. It may also be used with IP or non-IP end points to connect to real time inter-office or extra-office audio, video, Instant Messenger, VOIP, and webcam conferences.

[0252] FIG. **20** is a variation of the computer mouse apparatus as illustrated in FIG. **17**.

[0253] FIG. **20** illustrates a top view of a computer mouse apparatus **270** with a Trackpoint cursor-pointing and window scrolling device **272**, a display **275**, a flash memory card slot **277**, a digital camera or webcam **279**, a hinged display enclosure **273**, and a number keypad or keyboard **267**.

[0254] Also shown are a left-click button **274**, a right-click button **276**, a wired connection **278** to a host PC, PDA, or computer-related device, an optional AC/DC power supply or recharging unit **265**, and an optional wired USB connector **264** attached to the mouse enclosure **271**.

[0255] The computer mouse apparatus **270** can communicate to a PDA or mobile phone through a wired connection or a wireless connection such as Wi-Fi, WiMax, or Bluetooth using short range radio waves.

[0256] A typical key **266** on the mouse's embedded numeric keypad or keyboard **267** is of a size and shape similar to that found on mobile phones and embedded PDA keyboards. Numbers, letters, and/or symbols may be printed on each key **266**.

[0257] A projector may also be mounted on computer mouse apparatus **270**, which could be a dual or single LED projector on a thin panel or dual thin panel or projected on a wall. The projector lens may be located in front of the screen mounted adjacent to the keyboard or on the keyboard itself. Ostar, the latest high-performance LED from Osram, is 50 times brighter than comparable predecessor models, small in size at 3 cm.×1 cm., and has a high brightness of 120 lumens (lm), thus making it ideally suited for use in mini projectors. The LED itself takes up only a fraction of the device's surface area, generating an extremely bright and uniform light for its size.

[0258] FIG. **21** illustrates a side view of the computer mouse apparatus **270** depicted in FIG. **20** showing a representation of an electronic printed circuit board **268**, a flash memory card slot **277**, an upright hinged display enclosure **273**, and a motion sensor area **269** at the bottom of the mouse enclosure **271**. Also shown are a left-click button **274**, a Trackpoint device **272**, and an optional wired connection **278** from a host PC, USB connection, or a computer-related device.

[0259] The hinged display enclosure **273** is rotated or pivoted upright as indicated by direction arrow **133** to permit the user to view the display **275** according to his/her preference and in order for the webcam **279** (as shown in FIG. **20**) and keyboard **267** to be used. The hinged display enclosure **273** is folded closed as indicated by phantom line representation **135** when the computer mouse apparatus **270** is stored or operated without the need for its display **275** or keyboard unit **267**.

[0260] FIG. **22** is a variation of the computer mouse apparatus as illustrated in FIG. **17**.

[0261] FIG. **22** illustrates a top view of a computer mouse apparatus **280** with a mouse scroll wheel **282**, a display **285**, a memory card slot **287**, and a digital camera or webcam **289**.

[0262] Also shown are a left-click button **284**, a right-click button **286**, a hinged display enclosure **283**, and a wired connection **288** to a host PC, PDA, or mouse-compatible device. The buttons **284**, **286** and the mouse scroll wheel **282** are all embedded within the mouse enclosure **281**.

[0263] FIG. **23** is a variation of the computer mouse apparatus as illustrated in FIG. **20**.

[0264] FIG. **23** illustrates a top view of a computer mouse apparatus **290** with a 5-way navigation button **292**, display **295**, a flash memory card slot **297**, a digital camera or webcam **299**, and a numerical keypad or keyboard **321**.

[0265] Also shown are a left-click button **294**, a right-click button **296**, a hinged display enclosure **293**, and a wired connection **298** to a host PC, Pocket PC, or mouse-compatible device. The buttons **294**, **296**, the 5-way navigation button **292**, and each keyboard key **320** are all embedded within the mouse enclosure **291**.

[0266] FIG. **24** is a variation of the computer mouse apparatus as illustrated in FIG. **20**.

[0267] FIG. **24** illustrates a top view of a computer mouse apparatus **300** with a Trackpoint-style device **302**, a touch screen display **305**, a memory card slot **307**, a video camera **309**, a biometric fingerprint scanner **322**, and an ID chip or SIM card reader slot **323**. Also shown are a left-click button **304**, a right-click button **306**, a hinged display enclosure **303**, and a wired connection **308** to a host PC, Pocket PC, or mouse-compatible device which is embedded within the mouse enclosure **301**.

[0268] The fingerprint reader **322** may be used to authenticate a user's identification to allow access to confidential information, encrypted or password-protected data files or applications stored on the host PC or on the computer mouse apparatus **300**. A start scan button **326** and "pass", "fail" status indicator lights **324**, **325** enable the fingerprint reader **322** to function without the use of a GUI dialog box on the host PC or the display **305**. It should be understood that other biometric scanning devices may be embedded within the mouse enclosure **301** in lieu of the representative fingerprint reader **322** shown.

[0269] The fingerprint reader **322** embedded within the mouse enclosure **301** may also be placed on the surface of the mouse enclosure **301** to allow frequent verification of the person's fingerprint ID or similar biometrics. For example, the fingerprint reader **322** may be positioned near the thumb, index, or middle finger resting location on the mouse enclosure **301** so files requiring such a biometric authentication may be opened conveniently in one step.

[0270] FIG. **25** is a variation of the computer mouse apparatus as illustrated in FIG. **20**.

[0271] FIG. **25** illustrates a top view of a computer mouse apparatus **310** with a Touchpad cursor-pointing and/or window scrolling device **312**, a display **315**, a flash memory card slot **317**, a webcam or video camera **319**, and a group of keys **327** which serve as function keys, a numerical keypad, or a keyboard **328**.

[0272] Also shown are a left-click button **314**, a right-click button **316**, a hinged display enclosure **313**, and a wired connection **318** to a host PC, PDA, or mouse-compatible device. The buttons **314**, **316** and Touchpad device **312** are all embedded on the mouse enclosure **311**. The Touchpad **312** may also be used to input Graffiti-style characters which may be displayed on the built-in display screen **315**.

[0273] A computer mouse apparatus with an embedded or removable memory device (RAM, ROM, MRAM), a memory card reader, or a mini hard drive may be connected directly to a printer to print data or files from the embedded or removable memory of the computer mouse apparatus. Such a connection may be wired, with a USB cable for example, or wireless through a Bluetooth, Wi-Fi, IR connection, and the like. Where an application is necessary to facilitate the printing function, the application may be accessed on the network, host PC, or available from the memory of the computer mouse apparatus.

[0274] It should be understood that the following devices are packaged within a common mouse housing or enclosure: keyboard, the display, the hard drive, other memory (such as RAM, ROM, MRAM, and/or its equivalents), a memory card reader, the power source, the CPU and its associated chipsets and circuitry, the Wi-Fi module, the GPS receiver module, the modem module, the network connection and its associated circuitry, the RFID tag reader, the 3G module and/or any wireless or wired electronics designed to provide data bus connectivity according to any proprietary or industry standard communication specification or protocols. Such embedded devices may function in an integrated manner with features that complement and add value to the functioning of the other embedded devices within the computer mouse apparatus.

[0275] A GPS module refers to electronics circuitry designed to receive a GPS signal and communicate the processed output data to a secondary device or application within the mouse enclosure or the host PC. A GPS receiver module may be embedded within the mouse enclosure and used by a user to locate its position on a map and search for nearby companies and services.

[0276] It should also be understood that any one or more of the embedded devices may function independently of the other devices packaged within the mouse enclosure. For example, in FIG. **20**, the integrated keyboard **267** within the mouse enclosure **271** may be an independently functioning keyboard device with its own input and output data stream provided by the USB bus port. It need not be associated with the embedded display **275** and hence, may function independently of such a display. In such a case, the two devices share only a common enclosure and network connection to the host PC and the host PC treats each device as a separate peripheral device without regard to their proximity.

[0277] The computer mouse apparatus is environmentally friendly as it reduces the manufacturing, packaging, and distribution costs of multiple discrete devices manufactured or sold as separate discrete devices.

[0278] FIG. **26** is a block diagram of a simplified USB Hub **330** integrated into the computer mouse apparatus.

[0279] A USB hub **330** is essentially a "wiring concentrator" that makes possible the multiple device attachments characteristic of USB technology. USB hubs are typically implemented as a single physical chip, such as the Motorola MC141555.

[0280] A USB hub **330** consists of two core components: the hub controller **333** and the hub repeater **335**. The hub controller **333** incorporates circuitry for controlling the communication between the host system (i.e. the computer) and USB peripherals or other USB hubs. The hub controller **333** also implements the serial interface engine which manages the serialization of data packets to and from the upstream port **331** and the downstream ports **339**, **340**, **341**.

[0281] The hub repeater implements a "data switch" or "data bus" that manages the flow of data packets to and from the upstream port **331** and the downstream ports **339**, **340**, **341**. The hub repeater typically also implements support for reset, suspend, and resume signaling.

[0282] Port interfaces **332**, **336**, **337**, and **338** implement circuitry for interfacing with USB peripherals, USB hubs, or the host system. The power supply and regulator circuits **334** supply the chip electronics with power.

[0283] FIG. **27** shows a simplified block diagram of an 802.11 networking chipset **344**. The host interface **346** implements functions that allow the chipset to interface with a host system **345** such as a computer. The host interface **346** typically uses USB, PCI, or PCMCIA technology to interface with the host system **345**.

[0284] The OFDM/DSSS/MAC controller **347** is typically packaged as a single physical chip and implements the core functions of the various 802.11 versions such as 802.11g networking standard. These functions are Orthogonal Frequency Division Multiplexing (OFDM), Direct Sequence Spread Spectrum (DSSS) signal processing, and Media

Access Control (MAC). In addition, encryption and Quality of Service (QoS) functions may also be implemented on the same controller chip **347** (or on a separate chip).

[0285] The radio transceiver **348** implements circuitry required for RF and other analog functions. It typically incorporates the signal amplifier, oscillator, RF filters, and frequency synthesizer.

[0286] The antenna **349** may be a directional or omni-directional Wi-Fi antenna. The antenna **349** may also be packaged as a chip antenna. An omni-directional antenna transmits a wireless signal across a 360-degree range, while a directional antenna increases the signal strength and range in a focused direction. The mouse apparatus may typically have an omni-directional antenna.

[0287] FIG. **28** shows a block diagram of a computer mouse apparatus **350** with an integrated USB OTG bridge controller and USB hub chip **351**, mouse electronics **354**, a wireless communications adapter **353**, a portable power supply system **358**, and several embedded devices such as a mini hard drive **355**, integrated flash memory **356**, and a flash memory card reader **357**. The wireless communications adapter **353** also includes a suitable antenna(s) to transmit and receive the RF signals.

[0288] The computer mouse apparatus of the present invention incorporates USB host capability if necessary, for example, by utilizing an OTG bridge controller chip. A USB OTG bridge controller chip or chipset typically consists of the following:

1) Port interfaces, which implement circuitry for interfacing with USB peripherals. Typically, two USB peripherals will be "bridged" together by the chipset through the port interfaces. The two USB peripherals will be logically connected in a "master-slave" configuration.

2) The USB host component, which implements circuitry that allows one of the two USB peripherals to act as host. This function has traditionally been performed by a computer, because the USB host circuitry is integrated into the computer's motherboard.

3) The USB OTG controller, which contains circuitry that implements the USB OTG specifications. Typically this component contains a protocol engine which facilitates (through data translation) the exchange of data between the USB peripherals that are "bridged" together, memory for buffering data during read/write operations, as well as circuitry that allows the chip to also function as a USB peripheral.

[0289] Regardless of whether the computer mouse **350** is wired or wireless, the USB OTG chip interfaces directly to the USB Hub chip **351** and it is shown in FIG. **28** as a single block **351**. The USB OTG chip utilizes the USB Hub chip because the hub chip controls the USB port interfaces on the mouse. USB peripherals that need to be "bridged" together must connect though the ports. The USB OTG chip may have its own dedicated USB ports that could remove the need to connect the USB OTG chip to a separate USB Hub chip.

[0290] It should be understood that other peripheral devices may also incorporate embedded devices which add utility beyond the basic device functionality. For example, RAM memory or a mini hard drive may be incorporated within a VOIP headset, a keyboard, a USB compatible mobile phone, a Wi-Fi or wireless communications adapter, a PC speaker system, a graphics tablet, an external display, a DSL modem, a cable modem, and the like. Data from the embedded or removable memory component of such devices may be transferred to and from the host PC, PDA, or related computer device via a wireless connection such as a Wi-Fi connection or via a wired connection such as a USB connection.

[0291] FIG. **29** illustrates a perspective view of a USB-based PC headset apparatus **360** with added functionality. It shows a wireless communications adapter and antenna **369**, built-in flash memory **368**, voice recognition circuitry **366** for application control and biometric authentication, a noise cancellation microphone **362**, and headphone earpieces **342**. The PC headset apparatus **360** plugs directly into the USB port of a host computer or device.

[0292] Also shown are in-line volume, power and mute controls **361**, a USB connector **365**, an in-line electronics enclosure **364** which contains a digital signal processor and circuitry **343** to digitize the analogue audio signal and send it through the USB bus to a VOIP application, a mini hard drive **367** that may serve as a digital call recorder or provide music on hold, and a flash memory card slot **363**.

[0293] FIG. **30** illustrates a top view of a wired keyboard apparatus **370** with added functionality and its internal electronics circuitry. It shows an embedded wireless communications adapter **383** and associated antenna(s) **371**, built-in flash memory **375**, microphone & voice recognition circuitry **374** for application control and biometric authentication, keyboard electronics **384**, a mini hard drive **372**, and a USB hub and bridge controller chip **373**.

[0294] Also shown are a wired connection **382** to a host device, a flash memory card slot **381**, an external USB or FireWire port **380**, status and power LEDs **378**, **379**, a back-up power source **376**, and a voltage regulator **377**.

[0295] Thus we have seen from FIG. **29** and FIG. **30** that headsets and keyboards may also benefit from the additions of embedded devices which enhance the basic device and wireless capability to their host systems.

[0296] FIG. **31** shows a representation of a Properties Settings dialog box **390** suitable for the mouse apparatus depicted in FIGS. **8** to **15** and FIGS. **17** to **25**. Each functional device embedded within the mouse apparatus **350**, as shown in FIG. **28**, may be controlled from a single tabbed dialog box **390**.

[0297] The mouse tab **391** contains a control and settings area **397** for the mouse electronics and software similar to that found in a computer mouse in the Control Panel area of a typical Windows operating system. Additional tabs shown include tabs associated with the wireless adapter function **392**, the mini hard drive device **393**, a GPS chipset **394**, power management **395**, and general user settings **396**.

[0298] Changes to any device settings are effected using the apply button **400**. Also shown are a cancel button **399**, an OK button **398**, a help button **402**, a dialog box title bar **401**, and a dialog box close button **403**.

[0299] It should be understood that upcoming technological advances may affect or may cause to replace the embedded devices of the computer mouse apparatus with future equivalent devices, standards, and connection means. These may also be similarly embedded and utilized within the mouse apparatus without departing from the spirit and scope of the present invention.

[0300] FIG. **32** is a perspective view of a computer mouse apparatus **410** with its enclosure cover **412** in an open position showing a mouse cavity **415** with an integrated USB jack **414**, and with USB module **406** removed and shown beside computer mouse apparatus **410**.

[0301] In FIG. **32**, the removable USB module **406** is shown fixedly attached to USB plug **408** and removed from

the mouse cavity **415** as the bottom surface **411** of mouse cavity **415** is shown bare. A cavity is formed by the walls of the bottom surface **411** and the bottom of enclosure cover **412** when closed. Mouse cavity **415** can receive and house various types of modules such as USB module **406** and other USB-based devices, examples of which are flash memory drive, Wi-Fi adapter module, GPS module, USB-connected mini hard drive, gas sensor, temperature sensor, vibration sensor, accelerometer, humidity sensor, gas and smoke sensor, keypad, touchpad, speaker, camera, network card, display, light meter, magnetic sensor, fingerprint reader, web cam, light sensor, altimeter, custom module, scientific module, USB hub, indicator module, and the like.

[0302] FIG. **33** illustrates a perspective view of a computer mouse apparatus **410**, as shown in FIG. **32**, but with USB module **406** connected into USB jack **414** via its associated USB plug **408**.

[0303] The various types of modules, such as USB module **406**, may be fixedly attached to a USB plug **408**, which in turn is slidably received by USB jack **414** as shown in FIG. **33**. The modules rest on bottom surface **411** when inserted. The various module types may be manufactured in such a form that the enclosure cover **412** can be sufficiently closed and secured against the bottom surface **411** using the securing hook **416**. USB module **406** is protected by enclosure cover **412** and can be secured by pulling down enclosure cover **412** via enclosure hinge **418** and fastened by securing hook **416**. A release mechanism (not shown) is provided for manually releasing enclosure cover **412**.

[0304] In keeping with the present invention, USB module **406** may be integrated or built into the mouse cavity **415** or it could be separated from the computer mouse apparatus **410**. USB module **406** rests on the bottom surface **411** as USB plug **408** (partly shown) is locked into its associated USB jack **414**. Inserting a USB module **406** permits a convenient storage and allows ready access for back-ups or to store data files. For example, a flash USB module may have sufficient memory for back-up and data portability. Generally, connection to the host PC is via a common USB cable or via wireless as previously described. The removable modules may have internal power supply or it may be powered externally via a USB connector.

[0305] FIG. **34** illustrates a perspective view of a computer mouse apparatus **420**, similar to that shown in FIGS. **32-33**, with its enclosure cover **421** in an open position showing module jack A **423** and module jack B **425**, which are of different sizes. Module A **422** with fixedly attached module plug **427** and Module B **424** with fixedly attached module plug B **429** are shown beside computer mouse apparatus **420**.

[0306] The mouse apparatus **420** illustrated in FIG. **34** differs from the mouse apparatus **410** illustrated in FIGS. **32-33** in that the two module jacks **423**, **425** are built-in into the mouse cavity **426**. The two module jacks slidably receive respective module A plug **427** and module B plug **429**, which are associated with various connectors and modules. Mouse cavity **426** may contain one or more module jacks and which can slidably receive various forms of connectors and modules, such as module A **422** and module B **424**. Typically, such modules may be memory modules of various standards such as: Secure Digital (SD), mini SD, Multimedia cards (MMC), Compact Flash, Sony memory stick, and other memory module products. These removable memory modules, which are inserted singularly, are typically utilized to store and transport data in digital cameras, cell phones, music players and other consumer electronics. The modules may also be specialized modules of the type associated and enumerated in FIGS. **32-33**. Enclosure cover **421** protects the modules in a closed position as the cover is secured and released via securing hook **428**.

[0307] Computer mouse apparatus **420** may contain suitable interface electronics to allow the modules and connectors to share information and content access to the host PC.

[0308] FIG. **35** illustrates a perspective view of a wireless computer mouse apparatus **430** with an integrated PCMCIA slot **432**, and a PCMCIA module **434** that is fixedly attached to a PCMCIA connector **435**, removed and shown beside wireless computer mouse apparatus **430**.

[0309] PCMCIA slot **432**, as depicted in FIG. **35**, may be made of sufficient height and size and may be positioned in a way to suitably and slidably receive PCMCIA connector **435** and the fixedly attached PCMCIA module **434** from the back or rear position as shown in FIG. **36** or from the side position alternate location of PMCIA slot **433**. A suitable connector may be located within the slot cavity (not shown) which connects to the PC card slot.

[0310] FIG. **36** illustrates a perspective view of a wireless computer mouse apparatus **430** as shown in FIG. **35**, but with PCMCIA module **434** connected into the PCMCIA slot **432** via PCMCIA connector **435**.

[0311] An associated internal PCMCIA jack (not shown) slidably receives PCMCIA connector **435** (shown in FIG. **35**) as PCMCIA module **434** is inserted into PCMCIA slot **432**. PCMCIA module **434** is fixedly attached to PCMCIA connector **435**.

[0312] PCMCIA modules perform a variety of functions and are readily available, such as USB 2.0 adapters, Wi-Fi adapters, 3G adapters, memory drives, flash memory sticks, GPS receivers, mini hard drives, network hubs, modems, Ethernet, and the like.

[0313] FIG. **37** illustrates a perspective view of a wireless computer mouse apparatus **440** with an integrated USB jack **442**, the latter protected by a spring-loaded cover **444**. Also shown also is a USB module **446** with fixedly attached USB plug **447**, removed from and shown beside wireless computer mouse apparatus **440**.

[0314] Wireless computer mouse apparatus **430** may also be connected to the host PC via a USB cable. If it is wired, power is supplied via the USB connector. The PCMCIA module **434** has suitable interface electronics to communicate to the host PC via Wi-Fi or W-USB (wireless USB) connection, provided that communication capability is built-in into the mouse apparatus and its associated base and that a suitable portable power supply is available.

[0315] The slot formed by USB jack **442** is protected by a visible spring-loaded cover **444** to prevent entry of foreign bodies such as dust and pests when USB module **446** is removed from wireless computer mouse apparatus **440** as shown in FIG. **37**. The tensioning of the spring-loaded cover **444** is accomplished by a metallic or plastic spring or by a magnet. The door may contain a compressed or stretched spring pressing one part against the other so that it is able to retract into the mouse apparatus when a module is inserted and slidably received by a USB jack.

[0316] FIG. **38** illustrates a perspective view of a wireless computer mouse apparatus **440** as shown in FIG. **37**, but with USB module **446** connected into USB jack **442**.

[0317] USB plug **447**, which is fixedly attached to USB module **446**, is inserted into and slidably received by USB

jack **442** in such a way that spring-loaded cover **444** is moved out of the way and hinged internally. The size and height of USB jack **442** and spring-loaded cover **444** may be made to match a specific type of module. Alternatively, they may be made to accommodate a variety of module sizes.

[0318] The wireless computer mouse apparatus **440** may communicate with the host PC via an integrated USB wireless adapter such that there is no need to install a separate wireless network in the host PC. USB module **446** and other USB-based devices may have an embedded or removable memory in the mouse apparatus to store, back-up, update, and synchronize data files.

[0319] FIG. **39** shows a mouse apparatus **450** incorporating a gas sensor unit **452** and its associated electronics.

[0320] Ventilation holes **454** permit airflow **453** to the gas sensor unit **452**. A low vibration fan may be incorporated within the mouse enclosure to assist airflow and ventilation through the mouse apparatus **450**. The ventilation holes **454** are so designed as to prevent the entry of insects or other pests into the unit. Gas sensor **452** may detect specific gases such as carbon monoxide (CO), CO2, methane, and the like. Such a mouse apparatus may find use in an industrial environment to prevent possible suffocation risk from inadvertently inhaling odorless, colorless, and flammable gases. Incorporation of gas sensor **452** within a mouse apparatus permits the user to be protected from site to site without the need for a stand alone gas detector unit. The mechanical parts and electronic circuitry of the mouse, such as the optical sensor, scroll wheel, and buttons are unaffected by the operation of the gas sensor.

[0321] It should be understood that a smoke alarm or heat sensor with their associated electronics may also be embedded within the mouse apparatus. Such safety sensors and their associated electronics may obtain their power directly through the host PC USB cable connection or ideally, through a rechargeable battery with sufficient capacity to operate for several weeks without recharging.

[0322] FIG. **40** shows a mouse apparatus **455** incorporating a dual cursor pointing device.

[0323] A Trackpoint device **456** is located between the right-click button and left click button of the mouse apparatus. An optical sensor **458** (shown in hidden outline) is located on the bottom surface of the mouse apparatus **455**. A scroll wheel **457** is located on the left side of the mouse and operated with the thumb for scrolling purposes. A push button may be incorporated within the scroll wheel **457** as is the convention. The scroll wheel **457** may function similarly to the wheel mouse typically found in a Logitech mouse.

[0324] It should be understood, that the Trackpoint device **456** may be assigned a separate function from the optical sensor **458**. For example, the Trackpoint device may be configured through the Control Panel within Windows XP to scroll the contents of a window. The use of both the Trackpoint device **456** and the optical sensor **458** as cursor pointing devices would enable the user to move the cursor great distances without lifting the mouse off the surface of the table or desk. The mouse apparatus **455** may be connected to the host PC via a wired or wireless connector. If the mouse apparatus is wired, it will typically receive power through the wired connection as is the convention.

[0325] FIG. **41** shows a computer mouse apparatus **462** on the top of a companion solar panel or array of solar cells **461** disposed within a mousepad **460**.

[0326] The computer mouse apparatus **462** may be a generic mouse or one specifically designed for low power use with the solar panel mousepad **460**. The larger solar panel area of the mousepad **460** may provide a higher power output for continuous mouse operation than the computer mouse apparatus **470** shown in FIG. **42**.

[0327] A clear transparent or translucent polycarbonate material may be used to expose the solar cells **461** to solar energy. The top enclosure material may be finely patterned to permit the mouse sensor to detect mouse movement even when the sensor is an optical sensor. Such a pattern may include a crisscross arrangement of fine frosted lines or dots incorporated within the top polycarbonate material.

[0328] The solar panel mousepad **460** may be available in a range of functionalities. In its most basic form, the mousepad **460** contains a solar panel **461** with the necessary electronic components to serve as a power supply or battery recharger (not shown). Such a power supply or battery recharger may function to recharge other devices such as cell phones, MP3 players, and the like through a suitable connector jack or cable adapter. It is expected that the mouse will receive power from the solar panel mousepad **460** through its USB connector plug **463** that is plugged into the USB jack **464** on the side or rear of the mousepad. A specific battery charger connector may also be used to recharge the mouse batteries.

[0329] The mousepad may communicate through a wireless-USB, Bluetooth, Wi-Fi, or similar wireless connection **467** to the host PC. A wireless-USB (UWB), Bluetooth, Wi-Fi or similar wireless dongle **466** is connected to the host PC's mouse connector or USB connector to facilitate signal transfer from the mouse to the host PC with its wireless receiver chip **468**. Laptops or future PCs and wireless devices may have a built-in support for wireless-USB, Bluetooth, or Wi-Fi and thus, may not require the use of a separate USB dongle **466**.

[0330] The mousepad may also include appropriate electronics to serve as an external USB hub with its associated downstream USB connection ports (not shown). Similarly, for wireless networks such as mesh networks, the solar panel mousepad and its associated circuitry **465** may serve as a connection point or relay point to extend the range of wireless devices and networks.

[0331] FIG. **42** shows a mouse apparatus **470** powered by solar energy.

[0332] Disposed within the mouse enclosure and accessible to solar energy through a translucent or transparent enclosure cover **472** is a solar panel or array of solar cells **473**. The enclosure material **472** may be of a clear polycarbonate material to permit adequate access to solar radiation. The solar panel material may be of a rigid structure or a flexible structure. The solar cells **473** may be used to supplement the power needs of the mouse device and its additional components. For example, the solar cells may be used to recharge internal batteries for wired or wireless mouse operation. A booster circuit, DC to DC converter, and/or voltage regulators may be used to stabilize the voltage and operate the mouse electronics at a suitable voltage in a variety of lighting conditions.

[0333] The solar cells for the solar cell mouse apparatus **470** of FIG. **42** and the solar cell mousepad **460** of FIG. **41** may be made of a flexible material such as H-AS solar film panel or of the more rigid but common Polymorphous silicon.

[0334] FIG. **43** shows a mouse apparatus **480** with an integrated optical drive **482** located within the mouse enclosure and accessed by opening the enclosure cover **484**.

[0335] The optical drive **482** typically reads data from a mini CD-ROM disc **485**. It should be understood that optical drive **482** may also write data to a smaller version of CD-R, CD-RW, and various DVD disc formats. Push button **483** is pressed to release enclosure cover **484** to permit easy insertion and removal of the optical disc **485**. The enclosure cover **484** is spring-loaded and damped to gently lift it to an open position.

[0336] The mouse apparatus **480** may be connected to a host PC or similar electronic device through a shared USB cable connection facilitated by the hub architecture of FIG. **16** or FIG. **28**. The mouse and the optical drive electronics receive their power through the USB powered connection.

[0337] A smaller 1- or 2-inch form factor disc **485** is used with the optical device. The technology may be based on CD-ROM or DVD disc including the newer standards such as HD-DVD, Blu-Ray Disc, or Iomega's AO-DVD. The functionality supported allows such smaller discs to be used for data storage, video games, music, movie recording and playback, as a boot device, and for installing software programs. Optional Buttons (not shown) located internal or external of the mouse apparatus may permit the user to stop, start the device, and allow the device to play, rewind, and fast forward through presentations, music, or movie content.

[0338] Turning now to FIGS. **44***a* to **46***b*. It is not uncommon for a mouse apparatus and a keyboard apparatus to occasionally fail or become intermittent as a result of frequent and intense use of their associated mouse buttons and keyboard keys. This may result in putting too much stress on the miniature switch mounted on the printed circuit board (PCB) because of the continuous and heavy clicking and thus may eventually damage the said switch. Accordingly, to prevent or minimize such an occurrence, FIGS. **44***a*-**44***b* and **57**-**58** incorporate several shock absorbing means to reduce and dampen stress on the miniature switch.

[0339] FIGS. **44***a*-**44***b* are simplified partial cross sectional views of a computer mouse apparatus taken along lines **44**-**44** of FIG. **1**, showing a molded pressure absorbing spring **496** that functions to reduce the stress on a miniature switch **490** caused, for example, by frequent heavy clicking of a user.

[0340] In FIG. **44***a* the hand and the finger **498** (usually the index or middle finger) of the user are shown in a disengaged position. Molded pressure absorbing spring **496** is integrated into the bottom of mouse button **104** (such as a left-click button) and rested on a miniature push button switch or microswitch **490**. Also shown are a printed circuit board (PCB) **492** where the switch **490** is mounted, as well as a portion of mouse enclosure **101**.

[0341] FIG. **44***b* shows the hand and finger **498** in an engaged position as the tip of the finger **498** presses on mouse button **104**, as indicated by finger pressure direction arrow **494**. The stress caused by the continuous pressing down of mouse button **104** is borne by the molded pressure absorbing spring **496**. However, there is still enough force transmitted to the spring **496** to actuate miniature push button switch **490**.

[0342] FIGS. **45***a*-**45***b* illustrate a fixedly attached pressure absorbing leaf spring **502**, a variation of the spring design as shown in FIGS. **44***a*-**44***b*.

[0343] FIG. **45***a* shows a hand and finger **498** of the user in a disengaged position. The pressure absorbing leaf spring **502** is fixedly attached to the bottom of mouse button **500** as it rests on miniature push button switch **490**. The spring **502** may be of a different material from the mouse button **500** as it could be metallic or plastic and ultrasonically welded. Just as in FIGS. **44***a*-**44***b*, the fixedly attached pressure absorbing spring **502** also functions to reduce the stress caused, for example, by frequent heavy clicking of a user.

[0344] FIG. **45***b* shows the hand and finger **498** of the user in an engaged position as the tip of the finger **498** presses on mouse button **104**, as indicated by finger pressure direction arrow **494**. As the leaf spring **502** bears the stress caused by a continuous pressing down of mouse button **500**, the leaf spring **502** still transmits enough force to actuate the switch **490**.

[0345] FIGS. **46***a*-**46***b* illustrate a pressure absorbing compression spring **503**, a further variation of the spring designs as shown in FIGS. **44***a*-**45***b*.

[0346] The hand and finger **498** of the user are shown in a disengaged position in FIG. **46***a* with a pressure absorbing compression spring **503** in a rested position. The spring **503** may also utilize a traditional spring that may be compressed or stretched pressing one part against another to take in stress when finger **498** pushes down mouse button **504**.

[0347] FIG. **46***b* shows the hand and finger **498** of the user in an engaged position as the tip of finger **498** pushes down on mouse button **504** and flattens the compression spring **503**, as indicated by finger pressure direction arrow **494**. The stress caused by the continuous pressing down of mouse button **504** is borne by the compressed spring **503**. However, there is still enough force transmitted to the spring **503** to actuate miniature push button switch **490**.

[0348] It should be understood that the various spring designs illustrated in FIGS. **44***a*-**46***b* can limit or reduce the amount of force applied to switch **490** and printed circuit board (PCB) **492** when the mouse button is pushed down continuously but can still apply enough force to easily actuate the switch **490**.

[0349] FIG. **47** shows a cursor velocity tabpage **520**, which is used to control the relationship between the velocity of the mouse movement and the velocity of the displayed cursor associated with the mouse movement.

[0350] Shown in tabpage **520** is a two-dimensional graph **524** which maps the mouse's physical velocity (shown on the X axis **540** of FIGS. **49**-**50**) to the displayed cursor velocity (shown on the Y axis **541** of FIGS. **49**-**50**). The function of the graph and its control points is explained in more detail in FIGS. **49**-**50**.

[0351] A mouse gestures settings button **526** is also indicated. Specific mouse gestures may be used to enable the display cursor if the mouse has been inactive for some time. Examples of mouse gestures include circular clockwise or counter-clockwise movements, zigzag movements, and sideways movements. This is helpful in environments where there is vibration or accidental movements of the mouse and the user does not wish these accidental movements to move the display cursor.

[0352] The two-dimensional velocity graph is shown when radio button **521** is selected. If radio button **522** is selected, a more conventional one-dimensional slider velocity control appears (not shown). Any change to the settings of the cursor velocity tabpage **520** is effected by pressing the option buttons **528**.

[0353] FIG. **48** shows a simple flowchart process to control cursor velocity.

[0354] With each movement of the mouse, the optical, laser, or mechanical sensor that is associated with the mouse measures the displacement of the motion sensor and make this data available to the host or target device. The software under the control of the host or target device interprets the mouse displacement, for example the motion's velocity and direction **530**, and prepares to map this information to the display cursor **532** according to the settings of the cursor velocity tabpage. The mouse displacement data is then displayed as a cursor movement with a specific direction and an adjusted cursor velocity **534**.

[0355] FIGS. **49-50** show in detail the operation of the two-dimensional graph **524** of FIG. **47**. The graph **524** permits the user to adjust how the speed of the physical mouse maps to the speed of the mouse cursor on the display device. A line or curve **542** and curve control points **547**, **548**, **549** are shown on the graph **524**. Each curve point may be held and dragged up or down as indicated by direction arrows **545**, **546**, **551**, **552** to change the shape of the curve **542** to **544**, **543**, **553**, or **554** respectively. The function of the curve control points **547**, **548**, **549** are similar to the function of the curve control points in the Duotone Curve dialog box available in Adobe Photoshop CS.

[0356] The default straight line shape shown in FIG. **49** is consistent with the speed control function of a mouse apparatus set using the Control Panel in Windows XP. Two alternative curve shapes **553**, **554**, are shown in FIG. **50**. In the top curve **553**, a slow mouse speed results in exaggerated cursor speed movements in the same direction. Further increases in mouse speed result in a diminishing cursor speed response. In the bottom curve **554**, slow mouse speed results in slower cursor speed movements in the same direction. Further increasing mouse speed results in a more exaggerated cursor speed response. Thus the user can customize cursor speed response as a function of various mouse speeds.

[0357] The curve **542** shape may be constrained to prevent a negative slope in the curve **542** as this may confuse some users of the velocity control graph **524**. Similarly, the leftmost point **547** of the curve **542** should not cross the Y axis **541** (the relative cursor velocity axis). Otherwise, it would imply that the cursor should move when the mouse is stationary and there is no mouse velocity.

[0358] The leftmost point **547** may however, be placed on the X axis **540** (the relative mouse velocity axis) to imply that there is a certain threshold velocity necessary with the mouse in order for the display cursor to respond to the mouse movement. Although the controls shown in FIGS. **47**, **49-50** are shown for 2D mouse speed adjustment, it should be understood that the same graph technique may be used to control mouse speed to display cursor velocity in a 3D environment. Similarly, although the control is directed towards cursor velocity, it will be available when a 2D or 3D object is moved in a program or game. Cursor velocity control may also be adapted for use with a Trackpoint™ device, a Trackball™ device, or a Touchpad™ device. The following discussions are intended to provide a brief, general description of the computer apparatus architecture. Accordingly,

[0359] FIG. **51** shows a computer apparatus architecture typically associated with the mouse apparatus of FIGS. **17-25** in accordance with an embodiment of the present invention.

[0360] The mouse apparatus architecture permits the mouse to act as a network device in any wired or wireless network or USB connection. The computer mouse apparatus of FIG. **51** includes a processor **562** that pertains to a microprocessor or controller for controlling the overall operation of the mouse apparatus. This processor **562** is typically a low power consumption processor or a system-on-a-chip design. The mouse apparatus stores different kinds of data such as audio, media, documents, and the like in a mini hard drive **564**, cache **566**, or RAM **572**. The mini hard drive **564** is typically a small storage disk fitting within the form factor of a mouse apparatus. The mini hard drive **564** typically provides data storage capability for the mouse apparatus and back-up storage for other devices. However, since the access time to the mini hard drive **564** is relatively slow, the mouse apparatus may also include cache memory **566**. The relative access time to the cache **566** is substantially shorter than for the mini hard drive **564**. However, the cache **566** does not have the large storage capacity of the mini hard drive **564**. Furthermore, when active, the mini hard drive **564** consumes more power than does the cache **566**. Power consumption is particularly important when the mouse apparatus is a stand alone mouse powered by a battery (not shown). The mouse apparatus also includes random-access memory (RAM) **572** and read-only memory (ROM) **570**. The ROM **570** can store programs, utilities or processes to be executed in a non-volatile manner. The RAM **572** provides volatile data storage such as for the cache **566**.

[0361] The mouse apparatus also includes a number of user input device(s) **568** such as a scroll wheel, keypad, left-click and right-click buttons, touchpad input, Trackpoint device, and the like that allow a user to interact with the mouse apparatus.

[0362] Still further, the mouse apparatus includes a display **571** such as an LCD display that can be controlled by the processor **562** to display the output and other information to the user. A system bus **578** facilitates data transfer between at least the mini hard drive **564**, cache **566**, processor **562**, and CODEC **569**. The mouse apparatus also includes a serial bus interface **573** that couples to a data link **576** such as a USB connection. The data link **576** allows the mouse apparatus to couple to and become submissive to a host device. If the mouse apparatus detects that there are no host devices nearby, the mouse apparatus may serve as the host device itself. The audio CODEC **569** produces analog output signals for a speaker **567**. The speaker **567** can be a speaker internal or external to the mouse apparatus.

[0363] FIG. **52** shows one use of a mouse apparatus with added functionality.

[0364] A PABX branch exchange telephone system **580** is shown in an office environment setting. Incoming calls are routed to an extension telephone unit **581** through a wired connection **582**. However, if the recipient of the call is not present in their office (or does not wish to be disturbed), a message waiting indicator **586** or voicemail waiting indicator may be shown on the mouse apparatus **584**. Messages can be transmitted to the mouse using a wired or wireless connection **583**. The mouse apparatus may have additional buttons and lamps **588** to cancel or scroll through call data or to reset the indicator display. With the added functionality and processing capability of the mouse, keyboard, and PC headset apparatus depicted herein, it is desirable to network or assign the apparatus output to a specific device through a wired or wireless connection. Accordingly,

[0365] FIGS. **53***a* and **53***b* show a partial view of a network mouse apparatus **590** assigned to input data to a specific device.

[0366] The network mouse apparatus **590** may be connected to a network device, a host PC, or a peripheral device using a suitable wired connector or wireless communications standard such as Wi-Fi. The network mouse apparatus **590** includes a power supply, a right-click button and left click button **595**, a scroll wheel **594** with its associated button (located beneath the scroll wheel and not shown), an optical sensor (not shown) located at the bottom of the network mouse apparatus **590** for providing mouse displacement information, and an LCD display **592** or low power display accessible to the user with a form factor suitable for use on a mouse apparatus. Electronics circuitry to support the mouse function and the electronics and software to permit the network mouse apparatus **590** to interface with suitably configured network devices such as PCs and servers are self-contained within the mouse enclosure.

[0367] In FIG. **53***a*, the network mouse apparatus **590** is assigned to PC**1** as indicated in display **592** by direction arrow **596**. To change the target device for the mouse's displacement data, the user accesses the change target function of the network mouse (not shown) and uses the scroll wheel **594** to scroll down to the next target device, for example PC**2** as indicated in FIG. **53***b* by direction arrow **597**. To change the target device, the user has only to enter the new device on the mouse using the left-click on button **595**. After the target device for the network mouse is changed from PC**1** to PC**2**, the mouse movement or displacement data from the network mouse apparatus moves the cursor display associated with PC**2**, not PC**1**.

[0368] It should be understood that a network keyboard apparatus may also be assigned to input data to a specific device either on a network or through a direct connection. Similarly, both the network mouse apparatus and the network keyboard apparatus may be assigned to a single target device simultaneously for fast and convenient access.

[0369] The display **592** of the network mouse apparatus **590** may show a list of target devices accessible or assignable to the network mouse's data output, including its displacement data output. As detailed in FIGS. **53***a* and **53***b*, the mouse display **592** enables the network mouse apparatus to access key functions within a target device, such as to move the cursor associated with the target device, or to control various functions on the device through the interface or GUI menu displayed.

[0370] FIG. **54** illustrates a typical operating environment for network mouse apparatus **601**, **602**.

[0371] Network mouse apparatus **601** is a wireless device such as a wireless-USB device, while network mouse apparatus **602** has a wired connection to a network or a second device. Other devices on the representative network **600** include PC **603**, server PC **604**, printer **608**, laptop PC **607**, optical or magnetic storage device **606**, and a TV or LCD display **605**.

[0372] A network mouse apparatus may connect to different devices directly or via a network connection. Such connections may be enabled through a variety of wired or wireless standards and protocols such as USB, Ethernet ports, Wi-Fi, Bluetooth, wireless-USB, and the like.

[0373] Administrative permissions may be required to enable a device to accept input or displacement data from the network mouse apparatus **601**, **602**, either through a direct connection or through a network connection, be it wired or wireless. Such administrative access settings, permissions, and security restrictions or firewalls are typically on the target device side but may also be implemented on the network mouse apparatus. For example, the mouse may have the ability to exercise administrative control over one or more devices on a wired or wireless network. Once configured, the network mouse apparatus and the target device to which it directs its displacement data will have the necessary software, hardware, and drivers to communicate and exchange data in a seamless but secure environment.

[0374] FIG. **55** shows a Trackpoint settings tabpage **610** associated with a Trackpoint device should it be present on a mouse apparatussuch as mouse apparatus **455** of FIG. **40**.

[0375] The Trackpoint device possesses properties and characteristics that are different from the optical sensor typically located at the bottom of the mouse apparatus **455** of FIG. **40**. Thus, both the optical sensor and the Trackpoint device need to be calibrated separately and with respect to each other. For example, the pressure exerted by the index finger on the Trackpoint device may make the display cursor skew in a direction different from that of the optical sensor. Control **611** permits the user to rotate the Trackpoint device cursor direction relative to the optical sensor so that both sensors move the displayed cursor in a similar intended direction for a specific user.

[0376] Similarly, there are Trackpoint pressure sensitivity controls **627**, **628** for the left-right and up-down pressure respectively, exerted on the Trackpoint device by the index finger of the user. A threshold pressure level may be set with control **629** wherein the display cursor will not move if the pressure is below such a threshold. This control **629** is especially useful if the user rests his or her finger on the Trackpoint device during normal mouse operation.

[0377] The Trackpoint device controls may also be effected graphically using the circular graphical control **612**. For example, control **615** will rotate the direction of the displayed cursor travel when pressure is applied to the Trackpoint device. The square control point is held and dragged with a cursor similar to the circular control points shown in FIGS. **49**-**50**. The user should notice the changes to their cursor characteristics in essentially real time. Changes to any settings are effected by pressing button **609**.

[0378] Similarly, square control points **613** adjust the direction angle of pressure exerted on the Trackpoint device that results in a left-right scroll operation. Square control points **614** adjust the direction angle of pressure exerted on the Trackpoint device that results in an up-down scroll operation. As square control points **613**, **614** are held and dragged, the angle shown graphically by the dotted pattern **618** expands or contracts for the respective square control point. The empty space **616**, if present, will result in a no scroll action if pressure is exerted on the Trackpoint device in such a direction. It should be noted that a generic strain gauge with its associated control algorithm may be used in lieu of the Trackpoint device, and similar generic substitutions may be made in relation to the Touchpad device and other branded and trademarked devices.

[0379] FIG. **56** illustrates a sensor function tabpage **620**. The sensor function tabpage **620** assigns the function of each of the dual sensors on the mouse apparatus. For example, when displaced, the bottom optical sensor may function to scroll a window's contents or as a cursor pointing device. Such settings are made with radio buttons **621**. Checkboxes **622**, **625** permit the scroll bar movement to be limited to the up-down or left-right direction if desired. A threshold level sensitivity control **623** may be used to limit cursor movement

if vibration is present, such as in an industrial setting or when traveling. The top pressure sensor or Trackpoint™ device as depicted in FIG. **40** may be used as an additional cursor pointing device, a scroll bar control, or both, depending on whether the bottom cursor is detecting movement or a stationary mouse. Such settings are made with radio buttons **624**. Changes to any settings are effected by pressing buttons **626**.

[0380] FIG. **57** illustrates a top view of a cantilevered printed circuit board (PCB) **508** that serves as a means of pressure absorption, a variation of the pressure absorbing spring designs as shown in FIGS. **44***a*-**46***b*.

[0381] The cantilevered printed circuit board (PCB) **508** is partly mounted to the bottom of mouse enclosure **505** with two cut-out portions **507** to separate the two mouse buttons. Also shown are two copper wire conductors **506**, each one composed of two wires or conductors that serve as contact points. The wires are somewhat curved to reduce stress and prevent the wire from cracking when the printed circuit board (PCB) **508** is bent as a result of pushing down the mouse button **509**.

[0382] FIG. **58** is a cross sectional view of the mouse apparatus shown in FIG. **57** and a variation of the cross sectional views of FIGS. **44***a*-**46***b*.

[0383] In FIG. **58**, a hand and finger **498** are shown in a disengaged position as mouse button **509** rests on miniature push button switch or microswitch **490**. The cantilevered printed circuit board (PCB) **508** flexes when pressure is applied on mouse button **509** during, for example, continuous clicking by a user. The flexing action of the cantilevered PCB **508** reduces the amount of stress exerted on the switch **490** as the cantilevered PCB **508** moves down to its PCB flex position **512** as indicated by flexing direction arrow **510**. As the cantilevered PCB **508** reduces the force applied to the switch **490**, there is still enough force applied to easily actuate switch **490**.

[0384] FIGS. **59***a* and **59***b* show bottom views of a mouse apparatus **650** with a built-in charger unit and a retractable wall plug **654** at its bottom.

[0385] The retractable wall plug **654** is housed in a wall plug cavity **652** located at the bottom of the mouse unit near the mouse displacement sensor **658** (typically an optical sensor). When not in use, the wall plug's metallic prongs **656** are normally recessed within the mouse enclosure **650** and wall plug cavity **652** and do not touch the surface on which the mouse operates. When the unit requires charging, an indicator light (not shown) on the top surface of the mouse apparatus may indicate a low power condition. The mouse apparatus is charged by rotating the wall plug **654** essentially 90 degrees outward and pushing the wall plug's metallic prongs **656** into a power receptacle. Once fully charged, the mouse apparatus may be removed from the power receptacle and the wall plug retracted to its original stored position. An indicator lamp may indicate a fully charged condition. It should be understood that the mouse apparatus and its internal rechargeable batteries may be charged over a range of voltages, for example, from 110-220 volts, and may also be used to operate some of the devices on the mouse apparatus with relatively higher power consumption.

[0386] FIG. **60** shows a mouse apparatus architecture when the additional device is in a RAID system of mini hard drives. Redundant array of independent (or inexpensive) disks (RAID) system components include at least two hard drives **666**, **668** within the mouse apparatus enclosure **660**. The hard drives **666**, **668** are typically mini hard drives with performance suitable for use within a RAID system for faster read/write times or mirroring of data to both hard drives. The hard drives **666**, **668** are connected to the controller chip **664** that interfaces with the serial interface **662** to ultimately connect to the target device or host PC. The mouse architecture (not shown) also interfaces with the serial interface to share a common path to the target device or host PC.

[0387] It should be understood that with the rapid developments of wireless device technology, each device may have an independent wireless path or channel to the target device or host. In this arrangement, the bandwidth need not have to be shared among all the devices. For example, the mouse-specific data may be communicated via a USB cable that also supplies power to all devices within the mouse enclosure **660**. However, the RAID data may be received and transmitted wirelessly using a wireless adapter (not shown) integrated within the enclosure.

[0388] When multiple devices are networked or share a common wired or wireless bus connection, the mouse specific functions within the mouse apparatus may be given priority or additional bandwidth when the mouse is being used to increase its performance. When a mouse is used on a desktop PC, it is often connected directly to a USB port rather than through a hub to improve performance.

[0389] The present invention discloses how multiple devices may share a common mouse enclosure, which may drastically reduce manufacturing, packaging, and distribution costs relative to individually packaged USB or PC card (PCMCIA slot) devices such as flash memory sticks, GPS receivers, mini hard drives, Wi-Fi adapters, and network hubs. Such use of a mouse enclosure saves on the overall costs because multiple separate devices commonly purchased by computer users can be integrated or built into the mouse enclosure. With the present invention, there is no need to install a separate wireless network adapter PCI card, PCMCIA card, or standalone USB wireless adapter to the host PC. The wireless or Wi-Fi adapter is built-in into the computer mouse or keyboard.

[0390] In the present invention, USB-based devices can have embedded or removable memory to store, backup, update, and synchronize data files. For example, RAM in a mouse with USB or wireless connection may be adopted as a convenient backup device to store data files. A flash memory reader or flash memory incorporated within a mouse may have 32-1024 Megs of memory for back-up and data portability. This approach enables the user to take a wireless adapter and mouse with a laptop to access additional devices without a lot of tangled cords or the inconvenience of attaching separate devices one at a time. Generally, connection to all devices will be thru a common USB cable.

[0391] The computer mouse apparatus may be used by travelers who desire convenience and may be made available in hotels, restaurants, parks, bars, and other public hotspots to allow patrons to access a wireless network.

[0392] The preferred embodiment of the present invention is an optical computer mouse with an embedded wireless adapter and with the computer mouse connected to its host PC by a USB connector. A USB hub or hub/bridge is also embedded within the mouse enclosure to allow the wireless adapter to share a single USB connection to the host PC. A Trackpoint device may be incorporated into the mouse enclosure to function as a cursor-pointing device and/or a window scroll control device. RAM memory and/or a flash memory card reader may also be incorporated within the mouse enclosure or the

USB connector. As a wireless device, the computer mouse apparatus incorporates the wireless adapter, memory and memory card reader in either the base USB connector unit or the mouse enclosure.

[0393] It should be understood that the preferred embodiment of the present invention and the additional functionality as described and shown in the drawings may also be incorporated within a Keyboard Apparatus, a PC Speaker Apparatus, a PC Headset Apparatus, and similar devices. For example, the gas sensor of FIG. **39** may be similarly integrated into a Keyboard Apparatus, as may be the solar panel as depicted in FIG. **42**, the PMCIA slot of FIGS. **35-36**, the flash drive as shown in FIGS. **37-38**, the modules associated with FIGS. **32-34**, the device assignments control of FIG. **53**, the various architecture embodiments as shown in FIGS. **16**, **26-28**, **51**, the Wi-Fi adapter as shown in FIGS. **8-9**, and the like.

[0394] Although most of the figure drawings of the present invention display additional functionality related to a computer mouse apparatus, such additional functionality may be similarly integrated into a Keyboard Apparatus and other similar computer devices as mentioned herein.

[0395] There are four methods that a single USB device can use to present multiple devices to a host: Compound, Composite, Complex, and Common class. USB devices, whether wired or wirelessly connected to their host, should support such interface methods if they present multiple devices to their host or to multiple alternating hosts. Information on the USB standard are readily available: see "An Analysis of Wireless Device Implementations on Universal Serial Bus", USB Wireless White Paper, Jun. 3, 1997 and "USB Complete: Everything you need to developed custom USB peripherals", Axelson, J., 2005.

[0396] A compound device appears as a hub to the system. The individual devices supported by a compound device appear to the system as devices that are attached or detached from the ports on the hub. The key difference between a compound device and a hub is that individual devices supported by a compound device are made to attach or detach electronically rather than by physically inserting or removing a cable. The advantage of this approach is that full software support is in place. The attachment and removal of wireless devices would be the same to the system as the attachment and removal of wired devices on a standard hub. The disadvantage is that additional silicon would be required to present a 15-port compound device.

[0397] Another method of introducing multiple devices to a host through a single USB device is the composite method. A USB composite device is basically a device with multiple independent interfaces. It appears to the system as a single USB address that uses multiple interfaces to present the individual devices. These interfaces are defined by the interface descriptors stored in the device.

[0398] A composite device has one address on the bus but each interface has different function and specifies its own device driver on the host. For example, a composite device could have one interface for an audio device and another interface for the control panel. Comparing this to a compound device, a compound device includes both I/O and hub functionality. A keyboard apparatus that includes additional USB downstream ports is such an example. The advantage of this approach is that full software support is in place. The disadvantage is that individual devices can only be attached or removed by forcing a disconnect which takes down all the devices on the dongle and reconnecting with new configuration, interface, and Endpoint descriptors that define a new set of devices attached to the dongle.

[0399] Composite devices implement two or more sets of device functions. For example, an eye camera with a camera, dual audio channels, and a microphone is a composite device. Composite devices appear to the system as a single USB address that uses multiple interfaces to present the individual devices. A (Human Interface Device) HID class device requires 2 endpoints: Control and Interrupt In. The term endpoint is used to describe a point where the data enter or leave the USB system. When implemented as a Composite Device, the control endpoint (0) is shared by all the devices while separate interfaces need to be allocated to contain each interrupt endpoint.

[0400] The advantage of this approach is that full software support is in place. The disadvantage is that individual devices can only be attached or removed by forcing a disconnect, which takes down all the devices on the dongle, and reconnecting with new Interface (which is collection of endpoints and is directly related to the real-world connection), Configuration (which is a collection of interfaces and defines attributes and features of a specific model), and Endpoint Descriptors that defines the new set of devices attached to the dongle. The USB Endpoint Address is a 4-bit field, which limits the number of HID devices that can be supported by a composite implementation to 15. Typical silicon implementations support 4 endpoints therefore only 3 HID class devices.

[0401] Complex devices are defined only by the HID class. In the HID Report Descriptor, a complex device is created by declaring multiple top level Application Collections. This approach is similar to a Composite implementation. However, all devices defined in the Complex device share the same interrupt endpoint. The advantage of this approach is that full software support is in place. The disadvantage is that individual devices can only be attached or removed by forcing a disconnect that takes down all devices on the dongle and reconnecting with a new Report Descriptor that defines the new set of devices attached to the dongle. Another disadvantage is that a Complex Device is only defined within the HID specification. A general purpose solution should not assume that all wireless devices will be HID devices.

[0402] In general, the set-up of a wireless mouse is composed of an electronic mouse and a host adapter such as a dongle. The mouse communicates with the dongle by means of radio frequency ("RF") signals. The dongle is connected to a host system such as a personal computer ("PC") typically through the USB port. Some present configurations of a wireless mouse use the short-range RF technology that operates at 2.4 GHz called Bluetooth. In recent years, Bluetooth has become a popular solution for interfacing different PC peripherals such as trackballs, keyboards, and game joysticks. Bluetooth is also being used with mobile devices such as PDAs, smart phones, mobile phones, and laptops to wirelessly synchronize and transfer data among devices. Reasons behind the growing use of Bluetooth in different devices can be attributed to its key features: robustness, low complexity, low power, and low cost. These make Bluetooth very suitable for mobile devices and PC peripherals, especially human interface devices ("HID").

[0403] With these key features, HID devices enabled with Bluetooth wireless technology such as a keyboard or a mouse can be used to alternately control different computers or host

PCs without concern for connecting cables. In a particular embodiment, a Bluetooth-enabled mouse is used to control two host PCs. The user is provided with two manually-operated buttons that facilitate the host selection process. A user can select a particular host by pressing a button that makes the mouse "virtually-cabled" to one host PC. To select the other PC, a user presses the other button to "unplug" from the first host PC and "plug" to the second host PC. Accordingly, the invention is an implementation of a dual-host mouse by embedding host-selectors in the form of manually operated buttons on the present embodiment of a wireless mouse.

[0404] FIG. **61** shows a block diagram of the two host PCs (host PC one **1411** and host PC two **1412**) in a wireless dual-host mouse apparatus **1410** system. Two host adapters in the form of dongles **1415**, **1416** facilitate the communication between the wireless dual-host mouse apparatus **1410** and the two hosts, host PC one **1411** and host PC two **1412**. The dongles **1415**, **1416** are typically connected to the host PCs through the USB port. The wireless dual-host mouse apparatus **1410** includes a connect button **1413** that facilitates the temporary pairing procedure as part of the initialization process. After the hosts' system start-up, the user presses the connect button **1413** on the mouse to start the initialization process by putting the dual-host mouse apparatus **1410** into discoverable and connectable mode. Any of the two hosts may now discover the wireless dual-host mouse apparatus **1410** establish a virtual cable connection to it. However, only a single host connection is supported at a time. The first host PC that successfully initiates a pairing procedure with the wireless dual-host mouse apparatus **1410** is typically designated as host PC one **1411**. For now, the host PC designated as host PC two **1412** is not allowed to establish a connection to the mouse. The wireless dual-host mouse apparatus **1410** also includes two host-selector buttons **1417**, **1418**. The upper housing of the wireless dual-host mouse apparatus **1410** serves as the platform where the host-selector buttons **1417**, **1418** are located. The host-selector buttons **1417**, **1418** allow the user to select a desired host PC. The host-selector buttons **1417**, **1418** are disabled until after the initialization process and the user presses one of the host-selector buttons **1417**, **1418**. The connect button **1413** and the host-selector buttons **1417**, **1418** comprise the mechanical portion of the invention. Accordingly, FIG. **62** shows the block diagram of the electronic architecture of a dual-host mouse apparatus enabled with Bluetooth wireless technology. The electronic portion includes a processor **1422** that pertains to a dedicated processor or one that is shared with the other blocks on the wireless dual-host mouse apparatus **1410**. The processor can be a microprocessor or a microcontroller. The processor **1422** controls the overall operation of the invention for the case of a dedicated processor or the whole mouse system for a shared processor. The wireless dual-host mouse apparatus **1410** also includes storage for two different authentication sequences. An authentication sequence is composed of the ID code of the host and a key generated by random-number generator **1426**. The storage is typically RAM or Read-Only-Memory or ROM **1424**. Again, the ROM **1424** can be dedicated storage or can be shared with the entire mouse system. In a particular embodiment, both processor **1422** and ROM **1424** are shared by the invention. The invention is composed of the connect button **1413**, host-selector buttons **1417**, **1418**, and the random-number generator **1426** with the other components in the mouse apparatus system diagram **1420** such as the transceiver **1427**, the Bluetooth Profile, Application and Protocol Stack **1428** and the mouse electronic circuitry **1429**. The processor **1422** and ROM **1424** contain enough resources such as memory and I/O ports in order to support this set-up. The invention can either be connected directly to the processor or share a connection through a bus interface with one of the mouse components such as the transceiver **1427** as shown in FIG. **62**.

[0405] The authentication sequence stored in the ROM **1424** is used by the wireless dual-host mouse apparatus **1410** to authenticate a host after the host-initiated pairing procedure. Usually, only the host is required to authenticate a HID device. However, it is mandatory to have a two-way authentication process after the initialization procedure in order to distinguish the two hosts. The authentication sequences are transmitted and assigned to the two host PCs sequentially. The host designated as host PC one **1411** is assigned the first authentication sequence. Host PC one **1411** then initiates an unplug operation that removes the virtual cable from between the host and the wireless dual-host mouse apparatus **1410**. The wireless dual-host mouse apparatus **1410** returns to the discoverable and connectible mode after the unplug operation initiated by host PC one **1411**. At this point, the Host PC two **1412** may now discover the wireless dual-host mouse apparatus **1410** and establish a connection to it. The host PC one **1411** may still discover the wireless dual-host mouse apparatus **1410**. However, with the assignment of an authentication sequence, host PC one **1411** is expecting a two-way authentication process that is still not enabled during the initialization procedure and thus cannot establish a connection to the wireless dual-host mouse apparatus **1410**. After the pairing procedure of Host PC two **1412** and the wireless dual-host mouse apparatus **1410**, the other authentication sequence is assigned to Host PC two **1412**. Host PC two **1412** then immediately initiates an unplug operation and the initialization process completes.

[0406] The wireless dual-host mouse apparatus **1410** returns to the discoverable mode but not to the connectible mode. Any of the two hosts may now discover the mouse apparatus although no host is allowed to establish a connection to the mouse apparatus until the user presses the host-selector button **1417**, **1418** of a particular host. At this point, the one-way authentication process is still in effect such that both hosts, already configured as requiring two-way authentication process, are refused by the wireless dual-host mouse apparatus **1410**. When a user presses one of the host-selector buttons **1417**, **1418** to connect to a particular host, the two-way authentication process is enabled and the wireless dual-host mouse apparatus **1410** is in the dual-host mode. Upon the selection of a host, the processor **1422** decodes which button was pressed and fetches the corresponding authentication sequence from the ROM **1424**. The processor **1422** then loads the authentication sequence to the Bluetooth stack **1428** in order for the wireless dual-host mouse apparatus **1410** to authenticate the selected host after the host-initiated pairing procedures are completed. When the host is authenticated, a virtual-cable connection is established between the selected host and the wireless dual-host mouse apparatus **1410**. The selected host can now communicate with the wireless dual-host mouse apparatus **1410**. At this point, a typical PC-mouse relationship exists between the selected host and the dual-host mouse apparatus **1410**. To select a new host, the user presses the corresponding host-selector button **1417**, **1418**. It should be understood that the mouse electronic circuitry **1429** is exemplary of the prior art electronics associated with a

mouse. Thus, the dual use functionality may be implemented in other input and output devices such as a keyboard, a graphics tablet, a webcam, a PC headset, and the like.

[0407] FIGS. **63**, **64**, and **65** show an alternative architecture to that presented for a dual host mouse apparatus presented in FIGS. **61** and **62**. The descriptions of FIGS. **63-65** are directed to a multiple host keyboard apparatus. It should be understood that the architecture may be adapted and implemented in other devices such as a mouse, a graphics tablet, a webcam, and the like to give them multiple-host functionality.

[0408] FIG. **63** shows the schematic block diagram for the operation of the wired and wireless keyboard apparatus with multiple channels for different host PCs. The keyboard apparatus is able to communicate with different hosts whether wirelessly or through wired connection. A user is able to choose which host PC to direct the input of the keyboard apparatus through the host select switch **1425** which may be found on the top of the keyboard apparatus. In addition, it allows communication with Bluetooth-enabled devices such as PDAs and cellular phones. In FIG. **63**, the invention of the wireless keyboard apparatus with multiple channels consists mainly of a processor **1430**, nonvolatile memory **1431**, RAM **1432**, wake-up circuitry **1433**, switches **1434** for choosing between channels, the channel selector **1435** when data is transmitted wirelessly, and the Bluetooth transmitter/receiver **1436** for communicating with Bluetooth enabled devices. (NOTE: what's the difference between the switches and the channel selector? Difference is not explained very well.)

[0409] The keyboard apparatus' power is from the wired connection to a host PC or from a battery in the keyboard apparatus (not shown in FIG. **63**) if the keyboard apparatus is to be used wirelessly. When the keyboard apparatus is powered, the processor **1430** gets information from the nonvolatile memory **1431**, which includes the default data channel (for example the wired connection to either host PC A **1448** or host PC B **1449**), the available channels for transmission, instructions that control the flow of data on different channels, and other codes for identification of the hosts. The codes downloaded from the nonvolatile memory will be ID codes that correspond to the destination host PCs. The use of nonvolatile memory **1431** allows the storage of ID codes when the power is down.

[0410] Once the user selects one PC to be the host using the switches **1434**, the processor **1430** of the keyboard apparatus sends the data (pressed key) together with the ID code to the input/output block of the Bluetooth transmitter/receiver **1436** (wireless connection) or directly to the cable (wired transmission). When the user chooses to send information through a dongle transmitter/receiver **1438**, the Bluetooth transmitter/receiver **1436** and other transmitters will be in sleep mode. WUSB or any other proprietary standards may be used for the dongle transmitter/receiver. Multiple transceivers require a channel selector circuitry that can be hardwired or microprogram controlled. In case multiple wired connectors are used, a switch for choosing between the connectors may be added.

[0411] Preferably, power for the system will be provided by the cable to the host PC or an inexpensive power source such as a battery. If desired, a low voltage detector may be provided to signal low battery conditions to the user.

[0412] Power saving mode of the preferred embodiment adopts the power saving mode of the wireless mouse apparatus. The keyboard apparatus operates in three power modes—normal, standby and sleep—to conserve energy. In normal mode, the processor **1430** is clocked at its nominal speed and pressed key data is sent continuously to the host PCs. The keyboard apparatus enters standby mode when it is idle for a short period of time, such as 20 milliseconds. In this mode, the processor **1430** continues to work at normal speed. However, to further conserve power in standby mode, the processor **1430** switches off power to the Bluetooth transmitter/receiver **1436** and other transmitters. After a further period of nonuse, for example 10 seconds, the keyboard apparatus enters a sleep mode in which the processor **1430** enters a stop mode and the remainder of the circuitry is in full static condition.

[0413] Wake up circuitry **1433** periodically checks if any activity has occurred. If it senses any activity, it sends a signal that revives the processor **1430** out of its stop mode. If any activity (i.e. a pressed key or movement of the channel selector) does occur in either standby or sleep mode, the processor **1430** returns to normal mode and powers up the rest of the circuitry except for the inactive transmitters.

[0414] In wireless transmission from the processor **1430** to the input/output block of the dongle transmitter/receiver **1438** or Bluetooth transmitter/receiver **1436**, the data and ID code will be processed for framing, encryption and encoding. This will then be filtered and modulated to RF frequency for transmission. The use of Bluetooth, WUSB or any proprietary standard for the transmitter allows minimal collision and confusion on the data sent.

[0415] The keyboard project may come with its own transceiver **1445** dongle to communicate with the host PC **1441** or may use any available wireless interface of the host such as Bluetooth or wireless USB. Shown in FIG. **64** is the interface **1440** of the keyboard transceiver **1445** to the host PC **1441** (the wireless keyboard apparatus comes with its own dongle for the host PCs). The block diagram is composed of an EEPROM **1442**, a low-powered processor **1443**, a channel filter selector **1444**, and the compatible transceiver **1445**, which comprise the interface **1440** of the wireless device to the host PC **1441**. The transceiver **1445** may be any proprietary standard for wireless communication. The interface **1440** of the wireless device communicates to the host PC **1441** using a bus **1446**.

[0416] In powering the device, the low-powered processor **1443** downloads the instructions from the EEPROM **1442**. This includes the ID code for the keyboard apparatus and other transactions in order to decode and demodulate the signal from the device. Every time that the receiver of the host PCs **1441** receive and decode the signal from the transmitting keyboard, the processor identify the code and acknowledge the data when the code is correct. ID code determination of the host may be thru the installation software, data entry, or by out-of-band channel. Adding a channel filter selector **1444** to the interface **1440** of the transceiver **1445** to the host PC **1441** results in the user having the flexibility to select a particular channel.

[0417] FIG. **65** shows the direct connection of the Bluetooth transceiver **1447** to the host PC **1441**. This allows the wireless keyboard to connect to or use the built-in Bluetooth device in the host PC **1441** or the available Bluetooth dongle of the user. Software should be provided to allow the host PC **1441** to interpret the decoded data of the Bluetooth transceiver **1447** as the keyboard data.

[0418] FIG. **66** shows a perspective view of a mouse apparatus **1450** with an integrated remote control. The remote control functions are accessed through buttons or equivalent

control means which are typically located on the bottom surface of the mouse apparatus **1450** where they do not interfere with the placement of the user's hands on the mouse apparatus. The buttons are housed within a recessed cavity **1451** in such a manner that the buttons do not touch the surface on which the mouse apparatus **1450** rests or slides.

[0419] The integrated remote control may be used to control a variety of electronic devices such as TVs, DVD players, stereo systems, video recorders, fans, air conditioners, and the like. The mouse apparatus **1450** of FIG. **66** shows a limited number of exemplary buttons such as power on/off button **1452**, mute button **1453**, volume increase button **1454**, volume decrease button **1455**, channel up button **1456**, and channel down button **1457** for use on a television, radio, or stereo system. Depending on the target device, the integrated remote control may signal remote devices using IR or optical LEDs, radio frequency transmitters (general purpose RF, Bluetooth, w-USB, Wi-Fi, mesh, and the like), or both.

[0420] The integrated remote control is operated by inverting the mouse apparatus **1450** and pointing its optical sensor, remote control LED **1458** toward the device(s) it controls. The LED associated with the optical mouse displacement sensor may also serve as the LED signal source for the remote control. Alternatively, a separate LED for the remote control may be used and located on the mouse apparatus. If a separate LED is used, it would typically be located toward the front of the mouse apparatus to conveniently direct the LED signal toward its target device in a manner similar to a conventional remote control. The mouse apparatus **1450** housing the integrated remote control may be wired to a host device but is typically wireless, in keeping with the operation of a conventional remote control. A wireless USB connection or a Bluetooth dongle (not shown) connects the mouse apparatus to the host PC.

[0421] The remote control may be pre-programmed to operate a specific device or may be programmed to operate a variety of devices in a manner similar to programming a universal remote control. The remote control function may also be programmed from software resident on the host PC associated with the mouse function. If the integrated remote control is software programmable, its target device may be assigned by the user through a configuration settings panel displayed on the host PC's display screen. The remote control software may also have GUI buttons present on the display screen that modulate the optical sensor, remote control LED **1458** to send signals to a variety of target devices. Software buttons present on a display screen may extend the function of the remote control beyond the limited number of physical keys located on the mouse apparatus. With appropriate software, the remote control's users may also set and save preferences for different devices and different users.

[0422] The functionality associated with the integrated remote control requires electronic circuitry located within the mouse apparatus **1450** and may require optional software present on the host PC to support the extra functionality described. The power for the electronic circuitry associated with the integrated remote control and in general any device integrated within the mouse, keyboard, or computer apparatus of the present invention may be supplied from the cable (typically terminating in a USB connector) connecting the mouse apparatus to the host PC, from disposable or rechargeable batteries located within the mouse apparatus (in the case of a wireless mouse apparatus), from an external AC/DC adapter, and the like.

[0423] FIG. **67** shows a perspective view of a mouse apparatus **1460** with an integrated USB port **1461** for receiving a small device such as a memory stick or flash memory drive. The mouse apparatus **1460** of FIG. **67** is similar to the mouse apparatus **410**, **440** of FIGS. **32-33** and FIGS. **37-38**. However, the device cavity **1462** is disposed onto the bottom surface **1459** of the mouse apparatus **1460**. Thus, the memory device may be attached in a convenient and inconspicuous manner to a host PC for extended periods of time. A lid or cover attachment (not shown) may be fitted to the cavity to keep any ropes, key rings, or clasps attached to the memory device from dragging on the surface on which the mouse apparatus **1460** rests. As shown on FIG. **67**, the optical sensor **1463** is moved toward the front of the mouse apparatus **1460** from its conventional centered position to allow for the length required by the device cavity **1462** to accommodate the typical memory device form factor. Spring pads **1464** located on the sides of the device cavity **1462** are designed to press against most memory devices to help stabilize and secure them within the device cavity **1462**. The memory device is inserted into a USB port **1461** or Firewire receptacle (not shown) located on one side of the device cavity **1462**. It should be understood that more than one type of connector or port can be present within the cavity. For example, a USB connector and a Firewire connector may be located at opposite ends of the device cavity **1462**. Furthermore, the connector may be used with an extension cable to connect devices such as a camcorder or digital camera to the host PC. In addition, one or more types of memory card readers may be disposed onto the remaining surfaces of the device cavity **1462** to extend the functionality of the mouse apparatus without creating clutter near the desktop PC.

[0424] FIG. **68** shows a south-east perspective view of a mouse apparatus **1465** with an externally mounted USB serial port **1466**. The USB serial port **1466**, such as a USB or Firewire port, may be located on any surface of the mouse apparatus **1465**. Typically, the USB serial port **1466** is on the right side or rear portion of the mouse apparatus **1465** to reduce the chance of a connected device, such as a flash memory drive, from touching the right-side of a keyboard or bumping desktop clutter or beverages near the front of the mouse apparatus. Phantom line representation **1474** shows an alternative location for USB serial port **1466**. Multiple similar or different connector or port types may be disposed on the mouse apparatus surface as a convenient method of connecting occasional use devices to a host PC.

[0425] FIG. **69** shows a south-east perspective view of a mouse apparatus **1470** with an integrated biometric scanner **1471** disposed on the surface of the mouse apparatus **1470**. A biometric scanner **1471** such as a fingerprint reader or an iris scanner provides convenient means to enable access to files, programs, or services which require some form of biometric authentication. Indicator LEDs **1472** are provided on the mouse apparatus **1470** surface for a go, no-go verification indication. A reset button **1473** is also provided to abort a biometric scan or reset software on the host PC associated with the biometric scan. The biometric scanner **1471** may also provide authenticated access to files or data stored within the mouse apparatus **1470**. In such an implementation, the files or data may be stored in a restricted or partitioned section of memory requiring authentication or decrypted with the aid of the biometric scanner **1471**.

[0426] FIG. **70** shows a south-east perspective view of mouse apparatus **1475** with an integrated rotating control

knob **1476**. The rotating control knob **1476** may be based on an optical sensor (similar to the function of a scroll wheel on an optical mouse), on resistance (such as a potentiometer or a resistive polymer strip), or on inductance, capacitance, or magnetic changes. The rotating control knob **1476** may be rotated clockwise or counterclockwise, similar to the operation of a volume knob or tuner knob on a stereo receiver. The rotating control knob **1476** outputs a digital signal that may control the level of an assigned parameter and configured for a variety of tasks such as to adjust the volume of music, scroll up and down a window, adjust the speed of a process, increase the performance or resources assigned to an application, and the like.

[0427] FIG. **71** shows a south-east perspective view of a mouse apparatus **1480** with a Copy key **1481**, a Paste key **1482**, and a Cut key **1483** conveniently located on the top surface of the mouse apparatus **1480**. The keys **1481**, **1482**, **1483** may vary in size and location but are typically grouped together in an orderly arrangement and include words, letters, or symbols printed on or near each key that are consistent with the "copy", "paste", and "cut" functions in Windows, Linux, or Mac O/S applications. Similar copy, paste, cut, and other function keys may also be implemented on other computer apparatus. Although the mouse apparatus **1480** of FIG. **71** may be directed toward users who organize and edit considerable content from one application to another, it may be used to swap content between different host PCs. For example, the multiple host keyboard apparatus **1760** of FIG. **117** may use similar copy, paste, and cut keys to copy-and-paste or cut-and-paste data or content from one host device to other host devices connected to a mouse apparatus or keyboard apparatus that supports multiple host interoperability and connectivity. Content swapped between host devices, be it images, selected text or data, files, or folders, may be stored in the integrated memory present in the mouse apparatus or keyboard apparatus. The computer apparatus of the present invention that support multiple hosts may utilize a software program to manage the copying, storing, and movement of such content between hosts.

[0428] FIG. **72** shows a perspective view of a mouse apparatus **1485** with an enclosure cavity **1486** for storing small items within the mouse apparatus **1485** and close to the host PC. The enclosure cavity **1486** is similar to mouse cavity **415** of FIG. **32** but the USB jack **414** is omitted. An enclosure cover **1487** (shown in its open position) permits convenient access to any stored items. Examples of possible stored items include address books, keys, memory modules, password lists, stamps, coins, and the like. The enclosure cover **1487** is kept closed by the retaining hook **1488**. To open the enclosure cover **1487**, the release button **1489** is pressed.

[0429] FIG. **73** shows a perspective view of the mouse apparatus **1485** of FIG. **72** with its enclosure cover **1487** in a closed position. A transparent window made of glass, polycarbonate plastic, or other similar materials may be fitted onto the enclosure cover **1487** to permit the user to visually inspect the enclosure cavity **1486** without opening the enclosure cover **1487** to see if any items are present inside.

[0430] FIG. **74** shows a perspective view of a mouse apparatus **1490** with its enclosure cover **1491** open. The enclosure cavity **1492** contains a USB jack **1493** suitably positioned towards the front of the mouse apparatus **1490** to allow a USB flash memory drive or similar sized USB dongle to be inserted securely within the enclosure cavity **1492**. The mouse apparatus of FIG. **74** employs a different hinge **1494** design and two retaining hooks **1495** to secure the enclosure cover **1491** on the mouse apparatus **1490** body compared to the mouse apparatus **410**, **420** of FIGS. **32-34**. There is sufficient space within the enclosure cavity **1492** to permit most cords or ropes attached to the USB device to fit within the enclosure cavity. When pressed, the release button **1496** retracts the retaining hooks **1495** and permits the spring-tensioned enclosure cover **1491** to rise to its open position (shown). The enclosure cover **1491** is closed by pushing down the spring-tensioned cover down until the retaining hooks **1495** latch onto and retain the enclosure cover it in a closed position. FIG. **75** shows a perspective view of the mouse apparatus **1490** of FIG. **74** with its enclosure cover **1491** in a closed and latched position.

[0431] FIG. **76** shows a perspective view of a mouse apparatus **1500** similar to the mouse apparatus **410**, **420**, **1485** shown in FIGS. **32-33**, and **72** but employing two adjacent USB jacks **1503** within the enclosure cavity **1502**. It should be understood that having two USB jacks **1503** permits two USB devices to be inserted and accessed from the mouse apparatus **1500**. This may be convenient for moving or copying files from one flash memory device to another, for keeping backups of important data, or for having a second redundant USB port to the host PC. Similarly, one or both USB jacks **1503** shown may be replaced by other common or specialized connectors such as a Firewire jack, a microphone input jack, a headphone output jack, connectors for a PC headset, audio and/or video input or output jacks for digital downloads or uploads from a camcorder, digital camera, webcam, MP3 player, or other gadgets, a fiber optic connector, a digital audio input/output, an s-video connector, battery charger terminals, and the like. The enclosure cover **1501** serves to keep devices connected to the USB jacks **1503** out of reach or sight to prevent device damage or clutter in a work area.

[0432] FIG. **77** shows a perspective view of a mouse apparatus **1505** similar to the mouse apparatus **1490** shown in FIG. **74** but employing a side-mounted hinge **1497** design to secure the enclosure cover **1506** to the mouse apparatus **1505** body. Such a design may be convenient for users who may have to operate their mouse on occasion when the enclosure cover **1506** is open as shown. For example, the device inserted into the USB jack **1493** may require a visual readout from a display, or the user may need to frequently insert and remove several USB devices. It should be understood that the enclosure cover **1506** may be designed to be removed or detached from the mouse apparatus **1505** entirely. There may be one or more retaining hooks **1507** that secure the enclosure cover **1506** in its closed position (not shown).

[0433] FIG. **78** shows a perspective view of a mouse apparatus **1510** similar to the mouse apparatus **1490** shown in FIG. **74** but employing a different car trunk-style hinge **1512** design to secure the enclosure cover **1511** to the mouse apparatus **1510** body. Aside from user preference and aesthetics, the choice of a hinge design for the enclosure cover is also dictated by durability, manufacturing costs, the size of typical items placed within the mouse cavity, and the like. Similar to mouse apparatus **1490**, mouse apparatus **1510** also has an enclosure cavity **1492** where a USB jack **1493** is located. Two retaining hooks **1495** secure the enclosure cover **1511** and are released by pressing the release button **1496**.

[0434] FIG. **79** shows a perspective view of a mouse apparatus **1515** with an integrated biometric scanner **1471** and a USB jack **1517** within the mouse cavity. A biometric scanner **1471** such as a fingerprint reader is similar to that shown in

FIGS. **24** and **69**. Two indicator LEDs **1472** that indicate the device status (enabled, disabled) and/or the authentication status (go, no-go) are shown. A reset button **1516** associated with the biometric scanner **1471** is also shown. Such a computer apparatus is suitable for users who require occasional or frequent access to a biometric scanner **1471** and a USB or Firewire jack for authentication purposes and prefer that such access is inconspicuous or does not create desktop clutter.

[0435] FIG. **80** shows a perspective view of a mouse apparatus **1520** with an integrated fuel cell **1521** to power the mouse apparatus electronics. Such a mouse apparatus is typically cordless. The representative fuel cell shown implies that the fuel cell **1521** may be refilled with fuel through the fuel inlet **1523** as required. A fuel tank safety cap **1522** prevents the fuel from spilling or evaporating. An alternative approach is to use a detachable and/or disposable fuel cell cartridge that is fitted into the mouse cavity to power the mouse apparatus. Fuel cell technologies that cater to small mobile device continue to be developed and commercialized. Any fuel cell technology that is used within the mouse apparatus should operate at moderate or low temperatures, have minimal byproducts (water is a common byproduct of large fuel cells), and allow convenient replacement of the spent fuel cartridges or easy refueling of the fuel cell. Fuel cell technology from other small mobile devices may also be adapted for use in the mouse apparatus. Potential technologies include direct methanol fuel cells (DMFC), which have a small methanol cartridge that converts methane to power. DMFCs have the ability to cleanly power a cordless mouse or keyboard apparatus.

[0436] FIG. **81** shows a perspective view of a mouse apparatus **1525** with an integrated rotating control knob **1526** located inconspicuously within the mouse cavity. The function of the rotating control knob **1526** is similar to that depicted in FIG. **70**. Buttons **1527** or toggle switches incorporated within the mouse cavity permit the user to switch the function of the rotating control knob **1526**. For example, one button may toggle the rotating control knob **1526** from controlling speaker volume to radio station frequency, and the other button may toggle between AM or FM reception. The radio electronics may be incorporated within the mouse apparatus **1525**. Other uses for the rotating control include scrolling backwards or forwards in a video editing program, positioning an open order icon in a grid-based online trading program, or scrolling along the timeline of an audio or video editing program, and the like.

[0437] FIG. **82** shows a south-west perspective view of the mouse apparatus **1530** also shown in FIG. **83** but with the integrated display enclosure **1531** in its open position. The mouse apparatus **1530** of FIGS. **82-83** have a left click button **1533**, right click button **1534**, and a Trackpoint-style device **1535** located beneath the display enclosure **1531**. The buttons **1533**, **1534**, **1535** located beneath the display enclosure **1531** may be used when the display enclosure **1531** is in the open position. The display screen **1532** may be used to view video content such as IPTV content, podcast or videocast content, multimedia presentations, reminder notices, IM messages, inter-office communications, and the like. The display enclosure **1531** is attached to the mouse apparatus **1530** via a hinge **1536** that permits the user to adjust the angle of the display screen **1532** for optimum contrast and convenient viewing.

[0438] FIG. **83** shows a south-west perspective view of the mouse apparatus **1530** shown in FIG. **82** but with the integrated display enclosure **1531** in its closed position. In the closed position, the mouse apparatus **1530** operates as a conventional mouse. Shown on the closed side of the hinged integrated display enclosure **1531** are left and right click buttons **1537**, **1538** and a Trackpoint-style device **1539**. A scroll wheel mechanism is too thick to be placed on the display enclosure housing.

[0439] FIG. **84** shows a north-west perspective view of a mouse apparatus **1540** with an integrated display screen **1542**. A release button **1544** for the spring-loaded display enclosure **1541** is shown. A 5-way navigation button **1543** is used in place of the scroll wheel and left and right mouse buttons. The hinge **1546** allows the viewing angle of the display enclosure **1541** to be adjusted.

[0440] FIG. **85** shows a south-west perspective view of the mouse apparatus **1540** shown in FIG. **84** but with the display enclosure **1541** in its closed position. A 5-way navigation button **1545** is also used in place of the scroll wheel, while another 5-way navigation button **1543** is located beneath the display enclosure **1541**.

[0441] FIG. **86** shows a south-west perspective view of a mouse apparatus **1550** with an integrated clamshell-type display enclosure **1551**. A retaining hook **1553** and its corresponding hook cavity **1558** for securing the clamshell-type display enclosure **1551** are shown.

[0442] FIG. **87** shows a perspective view of a mouse apparatus **1560** with an integrated display enclosure **1561** stored on the bottom surface of the mouse apparatus **1560**. The bottom surface **1567** of the mouse apparatus **1560** is shown. The display enclosure **1561** may be manually opened and closed. Alternatively, a spring-loaded display enclosure with a release button (not shown) may be used to move the display enclosure in its open position.

[0443] FIG. **88** shows a perspective view of the mouse apparatus **1560** in FIG. **87** with the integrated display enclosure **1561** in its open position. The bottom surface **1567** of the mouse apparatus **1560** is shown. A finger indent **1564** is shown for conveniently lifting the display enclosure **1561** out of the display cavity **1568** when the display enclosure **1561** is in closed position. The display enclosure **1561** has two hinges **1565**, **1566** in two to permit the display enclosure **1561** to swivel back and forth and left and right for optimum viewing by the user.

[0444] FIGS. **89-91** show views of a mouse apparatus **1570** with an integrated display screen **1572** stored inside the body of the mouse apparatus **1570**. FIG. **89** shows a perspective view of the mouse apparatus **1570** with its display enclosure **1571** (shown in FIG. **91**) in a closed or retracted position and stored within the mouse apparatus enclosure **1479**. The left-click button **1575**, right-click button **1576**, and scroll wheel **1577** of mouse apparatus **1570** function in a conventional manner regardless of the position of the integrated display screen **1572**.

[0445] FIG. **90** shows a top view of the mouse apparatus **1570** of FIG. **89**. Shown in hidden outline are the relative positions of the display enclosure **1571**, display screen **1572**, and pivot hinge **1574** when the display enclosure **1571** is in a closed, retraced, or stored position. Release button **1578** unhooks the display enclosure **1571** and causes it to spring out of its storage cavity so that a user may further extend and position the display into its operating position. The operating position (not shown) of display enclosure **1571** is similar to the operating position of display enclosure **1581** shown in FIG. **94**.

[0446] FIG. **91** illustrates a schematic top view of the mouse apparatus **1570** of FIG. **89** depicting the display enclosure **1571** as it pivots from inside to outside the mouse apparatus enclosure **1479**. The display enclosure **1571**

[0447] The display enclosure **1571** is shown in its stored position within the mouse apparatus **1570** as indicated by phantom line representation **1514**. When released, the display enclosure **1571** may be pivoted outward as indicated by phantom line representation **1513** and pivot direction arrow **1477**. The display enclosure **1571** is further pivoted and extended to its operating position as indicated by pivot direction arrow **1478**.

[0448] The hinge enclosure **1588** is a part of the display enclosure **1571**. The display enclosure **1571** is pivotably attached to the hinge enclosure **1588** via hinge pins **1579**. The hinge enclosure **1588** is further pivotably attached to the mouse apparatus **1570** via pivot hinge **1574**. The display enclosure **1571** has a pivot hinge **1574** that allows it to rotate in and out of the mouse apparatus **1570**. Hinge pins **1579** allow the display enclosure **1571** to pivot upward as indicated by pivot axis direction arrow **1587** for optimum viewing by the user. The display screen **1572** is fixedly attached to display enclosure **1571**. The display screen is typically the size of a cell phone display screen and may be color or black and white and available in a variety of resolutions and display technologies such as color active-matrix LCD, OLED, and the like.

[0449] FIGS. **92-94** show various views of a mouse apparatus **1580** with an integrated display screen **1583** stored inside the body of the mouse apparatus. FIG. **92** shows a north-west perspective view of a mouse apparatus **1580** with its integrated display enclosure **1581** in a closed or retracted position. FIG. **94** shows a perspective view of a mouse apparatus **1580** with its integrated display enclosure **1581** extended from within the mouse apparatus **1580**. FIG. **93** shows a south-west perspective view of a mouse apparatus **1580** with its integrated display enclosure **1581** in an open, extended, and pivoted forward operating position. A hinge enclosure **1582** on the display enclosure **1581** permits the display enclosure **1581** to pivot upward for optimum viewing by the user.

[0450] FIG. **95** shows a south-west perspective view of the mouse apparatus **1590** with an integrated display enclosure **1531** and a built-in TV tuner **1591**. The TV tuner **1591** and its associated circuitry allow the integrated display screen **1532** and/or the host PCs' main display to present analog or digital radio and television programming. The TV tuner **1591** may also support reception of mobile cellular phone 3G, video, or television subscription content.

[0451] In conventional prior art mouse apparatus, a single displacement sensor cannot sense the rotation of the mouse about a pivot point. In a further embodiment of the present invention, mouse apparatus may incorporate two or more motion sensors or displacement sensors. Typically, each sensor is an optical sensor and each sensor is capable of providing X and Y displacement information to its host PC or host device. The two or more displacement sensors are physically separate to allow the mouse apparatus or host PC to adequately resolve a rotation component (if one is present) in the mouse apparatus movement. The two or more displacement sensors also provide redundancy in the motion sensing function of the mouse apparatus.

[0452] Accordingly, FIG. **96**A shows a top view of a mouse apparatus **1595** with two integrated displacement sensors **1596**, **1597**. Also shown are a conventional left-click button **1598**, right-click button **1599**, and scroll wheel **1600**. Typically, the representative displacement sensors **1596**, **1597** are optical sensors. With data from two or more displacement sensors, and a suitable control algorithm, rotating the mouse apparatus **1595**, as indicated by phantom line representation **1592** and pivot direction arrow **1601**, on or about a stationary spot will result in the cursor (shown in FIG. **96**B) on the host PC display screen **1593** to trace an arch or curve, as indicated by direction arrow **1594**.

[0453] FIG. **96**B shows a representative host PC display screen **1593** and the resulting path of a GUI style cursor, as indicated by direction arrow **1594**, when the mouse apparatus **1595** is rotated as indicated by phantom line representation **1592** and pivot direction arrow **1601**. When the mouse apparatus **1595** is moved left, right, up, and down in a linear fashion, the display cursor moves in a corresponding linear left, right, up, and down motion on the display screen **1593**. When the mouse apparatus **1595** is rotated or pivoted about a pivot point on a physical surface, the display cursor moves in an arch or curve corresponding to the arch or curved path of the physical mouse apparatus **1595**.

[0454] A mouse apparatus capable of detecting rotational motion and effecting such motion on the display cursor allows for more natural curved movements of the mouse apparatus when locating and interacting with icons or other GUI objects on the display screen **1593**. A natural pivot point for the mouse apparatus is the user's wrist area. In such a case, the pivot point is located below the mouse apparatus. It should be understood that the pivot point associated with any rotational motion may exist within the mouse apparatus enclosure, for example, at the center of the mouse apparatus. The pivot point may also exist to the left, right, or above the mouse apparatus.

[0455] Preference settings on the mouse control panel allow each user to configure the speed of the cursor motion and the apparent radius of the cursor arch or curve. The second displacement sensor also provides a measure of redundancy and precision for interpolating or averaging the displacement data from both displacement sensors **1596**, **1597** into one common value.

[0456] FIG. **97** shows a schematic top view of a mouse apparatus **1605** with an integrated display screen **1607** similar to the mouse apparatus of FIG. **95**. If the integrated display screen **1607** is configured to show a cursor, the displayed cursor may be moved by a Trackpoint-style device **1610** which is accessible when the display enclosure **1606** is in its open or extended position, as shown in FIG. **97**. The left-click button **1608** and right-click button **1609** are used, in such a case, to interact with and select items on the display screen **1607**.

[0457] An alternative approach to controlling the cursor on the display screen **1607** is to calibrate the cursor control algorithm for the display screen **1607** to move in the opposite direction to the mouse apparatus **1605** movement or motion. The resulting effect is such that the display cursor appears stationary with respect to the physical surface the mouse apparatus rests or moves on.

[0458] For example, if the mouse apparatus **1605** moves left, as indicated by direction arrow **1603**, by 1 cm, the display screen **1607** cursor may move right by 1 cm, thus appearing to be stationary relative to the surface on which the mouse apparatus **1605** moves. Similarly, a mouse apparatus up motion as indicated by direction arrow **1589**, a down motion as indicated by direction arrow **1602**, and a right motion as

indicated by direction arrow **1604**, result in the display screen **1607** cursor moving in an opposite motion down, up, and left direction respectively.

[0459] The display cursor motion need not correspond 1:1 with physical the mouse apparatus physical motion. The cursor motion may be a multiple or fraction of the physical motion. Such settings would be configured on the mouse configuration panel. The apparent stationary cursor (with respect to the physical surface) on a moving display screen **1607** permits the user with an alternative approach to using the display cursor to select items from menus, drop down lists, and the like, present on the display screen **1607**. It should be understood that in a conventional host PC monitor, the monitor is stationary with respect to the desktop surface and the display screen cursor moves in the same direction as the mouse apparatus on its physical surface.

[0460] FIG. **98**A shows a partial top view of a mouse apparatus **1615** with an integrated display screen **1617** fixedly attached to pivoting display enclosure **1616**. The mouse apparatus **1615** of FIG. **98**A is similar to the mouse apparatus **1580** of FIG. **94**. Several display icons **1618** with their associated text labels are shown on the display screen **1617**. Each display icon **1618** is selected, in sequence, by rotating the scroll wheel **1621**. The selection may be effected by pressing the buttons associated with the scroll wheel **1621**, left-click button **1619**, and right-click button **1620**. In such a manner, the display screen **1617** may be used to facilitate opening applications, or switching between applications, to select files stored on the host PC or the mouse apparatus, or to activate functions within applications without interrupting the primary host PC's display screen. Such an arrangement may be used, for example, to play movies or in gaming applications where it is undesirable to have windows or control panels pop into view on the host PC's display screen.

[0461] FIG. **98**B shows a diagram of the display icon **1618** highlight sequence as each display icon **1618** is selected as the scroll wheel **1621** is scrolled down the list of available applications presented on the display screen **1617** of FIG. **98**A.

[0462] FIG. **99**A shows a partial top view of a mouse apparatus **1625** with an integrated display screen (not shown). The mouse apparatus **1625** of FIG. **99**A is similar to the mouse apparatus **1580** of FIG. **92**. When a scroll wheel **1626** is present, the scroll wheel **1626** may be used to scroll or toggle between choices presented on the integrated display (not shown) of mouse apparatus **1625**. Choices are effected by pressing the buttons associated with the scroll wheel **1626**, the left-click button **1627**, or the right-click button **1628**.

[0463] FIG. **99**B shows a partial top view of a mouse apparatus **1630** with an integrated display screen (not shown). The mouse apparatus **1630** of FIG. **99**B is similar to the mouse apparatus **1550** of FIG. **86**. When it is present, the Trackpoint-style device **1631** may be used to scroll up and down, or left and right, or used to toggle between choices presented on the integrated display of the mouse apparatus **1630**. Direction arrows near the scroll wheel **1626** of FIG. **99**A or near the Trackpoint-style device **1631** of FIG. **99**B indicate how GUI objects, icons, or items are scrolled or how a cursor is moved on such integrated displays.

[0464] FIG. **100** shows a perspective view of a wireless multiple host mouse apparatus **1635** which may operate across multiple host PCs. A dongle **1636**, **1637**, **1638** is attached to one or more host PCs. The user presses a button **1639**, **1640**, **1641** on the mouse apparatus associated with a specific dongle that is attached to a specific host PC. Content buttons may also be present to reset or change the frequency used to communicate with each dongle. Typically, the dongle **1636**, **1637**, **1638** connects to the host PC using a USB plug **1642**. When the user switches the wireless multiple host mouse apparatus **1635** to a different host PC, the previous host PC does not warn of a missing mouse apparatus but merely shows the mouse cursor in a stationary position on the host PC display.

[0465] FIG. **101** shows a south-east perspective view of a multiple host mouse apparatus **1650** using a toggle switch **1651** to switch between 2 host PCs in a convenient and intuitive manner. The LED sensor **1652** is shown in hidden outline. Although a wireless approach is preferred, a multiple host mouse apparatus **1650** may also utilize a wired connection to the host PCs. In a wired arrangement, the cable used will branch out and connect to the desired host PCs. Similarly, a combination wired (cable attached to one host PC) and wireless approach (using a dongle attached to the other host PCs) may be used.

[0466] FIGS. **102** (A, B, and C) show isometric views of various wireless dongles **1655**, **1656**, **1657** that may connect to a host PC when a multiple host mouse apparatus is used. FIG. **102**A illustrates a dongle **1655** with a selection knob **1658**. The selection knob **1658** is rotated until the desired button on the multiple host mouse apparatus to control the host PC is selected. FIG. **102**B illustrates a dongle **1656** with a selection knob **1659**. The selection knob **1659** is rotated until the desired button on the multiple host mouse apparatus to control the host PC is seen through the selection indicator window **1661**. FIG. **102**C illustrates a dongle **1657** with a selection button **1660**. The selection button **1660** controls whether a multiple host mouse apparatus can or cannot communicate with the dongle **1657**. Communication to and from the multiple host mouse apparatus to the dongle **1657** may be indicated by the status LED **1662**.

[0467] FIG. **103** shows an isometric view of a miniature USB mouse apparatus **1665** being connected to a USB extension cable **1666**. The miniature USB mouse apparatus **1665** may utilize an optical sensor (not shown) as the displacement element or a Trackpoint-style device **1667** to move the cursor on a host PC display. The miniature USB mouse apparatus **1665** may be powered by internal rechargeable batteries (not shown) or via the USB extension cable **1666**.

[0468] FIG. **104** shows an isometric view of the miniature USB mouse apparatus **1665** of FIG. **103** being connected to a wireless transmitter module **1670**. Used together, the miniature mouse apparatus **1665** and the wireless transmitter module **1670** function as a wireless mouse apparatus **1671**. The wireless transmitter and interface electronics circuitry are shown as a wireless module **1673** in representative hidden outline. The transmitter sends the mouse's displacement data to a wireless dongle connected to a host PC. Examples of such wireless dongles are shown in FIGS. **100**, **102**, and **106**. The wireless transmitter module **1670** has an on/off switch **1672**. The wireless transmitter module **1670** may also accept input from a cable-wired mouse apparatus shown in FIG. **105** or cable wired keyboard apparatus. The wireless transmitter module **1670** may be powered by internal rechargeable batteries or via the USB connection. A power supply jack **1674** is included on the wireless transmitter module **1670** for power charging purposes. A left-click button **1668**, right-click button **1669**, and a Trackpoint-style device **1667** are included in the miniature USB mouse apparatus for basic mouse operations like cursor pointing and icon selection.

[0469] FIG. **105** shows a perspective view of a cable-wired mouse apparatus **1675** with a corresponding USB plug **185** being connected to a wireless transmitter module **1670**. An AC/DC adapter **1676** with a power supply plug **1677** is available for connection to the wireless transmitter module **1670** through the power supply jack **1674** and supplies power to both the cable-wired mouse apparatus **1675** and the wireless transmitter module **1670** if necessary. The wireless transmitter and the interface electronics circuitry is shown as an wireless module **1673** in representative hidden outline.

[0470] FIGS. **106**A-**106**C show an isometric view of hybrid dongle adapters **1680**, **1681**, **1682** (either wired and wireless) suitable for supporting the function of a multiple host mouse apparatus as shown in FIGS. **100** and **101** or a multiple host keyboard apparatus as shown in FIGS. **107**-**115**, and **117**. The hybrid dongle adapters **1680**, **1681**, **1682** permit a conventional wired keyboard or mouse to be used on a host PC and also permit signals from a wireless multiple host mouse or keyboard apparatus to communicate with the host PC to which a hybrid dongle is attached. Typically, the host PC system cannot detect if the keyboard signal or mouse signal is arriving from the conventional wired keyboard or mouse or from the wireless multiple host mouse or keyboard apparatus. The hybrid dongle adapters **1680**, **1681**, **1682** feature an on/off switch **1683** to disable the wireless dongle circuitry. A representative wireless module **1684** (shown in hidden outline) defines the circuitry of the wireless dongle receiver and the interface and switching electronics associated with a hybrid dongle adapter **1680**, **1681**, **1682**. The hybrid dongle adapters **1680**, **1681**, **1682** may connect to the host PC using a PS2 connector **1685** or USB connector **1686**. A PS2 port **1687** or USB port **1688** may be provided on the hybrid dongle adapters **1680**, **1681**, **1682** to permit a variety of conventional keyboards or mouse apparatus to be attached to the host PC through the hybrid dongle adapters **1680**, **1681**, **1682**. The hybrid dongle adapter **1680**, **1681**, **1682** takes its power from the host PC.

[0471] FIG. **107** shows a perspective view of a conventional keyboard apparatus **1690** attached to a host PC **1692** through a hybrid dongle **1693**. The hybrid dongle **1693** connects to the host PC **1692** via a USB port **1699**. A multiple host keyboard apparatus **1691** is also shown communicating wirelessly with the host PC **1692** via representative wireless transmitting and receiving wireless module **1719** shown in hidden outline. As mentioned previously, the host PC **1692** generally cannot distinguish between keyboard input arriving from the conventional keyboard apparatus **1690** or the multiple host keyboard apparatus **1691**. The wireless module **1694** shown in hidden outline represents the buffer memory and switching circuitry within the hybrid dongle **1693** necessary to prevent the two keyboard signals from interfering with each other. Generally, only one keyboard is used with each host PC **1692** at one time.

[0472] FIG. **108** shows a perspective view of a wired multiple host keyboard apparatus **1695**. A switch **1696** is provided to indicate the host PC to which the keyboard output (keystrokes) is directed toward. Although two separate PS2 keyboard cables **1697** (one for each host PC) may attach to the multiple host keyboard apparatus **1695**, FIG. **108** indicates only one PS2 keyboard cable **1697** is provided. If a second host PC connection is desired, the user may obtain an extension cable to connect to the second host PC from the PS2 port **1698** on the cable connector. Although a PS2 keyboard cable **1697** and PS2 port **1698** are shown, the multiple host keyboard apparatus **1695** may connect to each host PC through other means, such as a USB jack and connector.

[0473] FIG. **109** shows a perspective view of a dual keyboard apparatus **1700**. The dual keyboard apparatus **1700** shown contains two full sets of standard keys, one for each host PC or host PC group. The two cables **1701**, **1702** from the keyboard apparatus are inserted into their respective host PCs. The top keyboard may also connect to other host PCs via wireless dongles. Each of the five (5) buttons **1703**, **1704**, **1705**, **1706**, **1707** on the top row of the first keyboard is associated with a specific wireless dongle. Also shown are USB jacks **1708** for connection of additional devices to extend the functionality of the keyboard apparatus. Headset and speaker jacks **1724** are included on the dual keyboard apparatus **1700** for additional connectivity to devices such as earphones, speakers, and microphones.

[0474] FIG. **110** shows a perspective view of a wired multiple host keyboard apparatus **1710** similar to FIG. **108** but with two different host PC connector ports. A USB port **1711** and a PS2 port **1712** are shown terminating a single cable **1713** from the multiple host keyboard apparatus **1710**. Such an arrangement may be desirable for mixing different host PCs to the multiple host keyboard apparatus **1710**. A switch **1696** is used to indicate which host PC the keyboard output is directed toward.

[0475] FIG. **111** shows a perspective view of a hybrid multiple host keyboard apparatus **1715** having wired and wireless functionality. The hybrid multiple host keyboard apparatus **1715** supports three (3) host PCs. A 3-way switch **1714** is provided on the hybrid multiple host keyboard apparatus **1715** to indicate to which host PC the keyboard output is directed. Two host PCs may be connected to the hybrid multiple host keyboard apparatus **1715** by standard PS2 keyboard cables **1716**. A third host PC may be connected either using a wireless dongle **1717** or a USB-style extension cable (not shown). A switch **1718** is provided to indicate the manner of connecting to the third host PC. Representative wireless transmitting and receiving wireless module **1719** are shown in hidden outline. A USB port **1709**, which is a series "B" receptacle, is included for additional connectivity to other devices.

[0476] FIG. **112** shows a perspective view of a multiple host keyboard apparatus **1720** with an integrated remote control. The remote control device may use an RF approach, an IR approach, or both. The functionality of the multiple host keyboard apparatus **1720** of FIG. **112** is similar to the functionality of the mouse apparatus **1450** of FIG. **66**. The keyboard apparatus of FIG. **112** may also operate on multiple host PCs. The IR emitter **1721** is typically mounted on the forward edge of the multiple host keyboard apparatus **1720**. An antenna **1722** or swiveling optical waveguide may also be used to extend the range of the remote control transmitting element. Representative wireless transmitting and receiving wireless module **1719** are shown in hidden outline. A wired cable (not shown) is provided for the first host PC. Buttons **1723** on the keyboard apparatus allow the user to direct the keyboard output to other host PCs connected to the multiple host keyboard apparatus via a wireless dongle.

[0477] FIG. **113** shows a perspective view of a multiple host keyboard apparatus **1725** that can support multiple wireless host PCs. The multiple host PCs are connected to the multiple host keyboard apparatus **1725** via their respective wireless dongles. An IR emitter **1726** built into the device permits the multiple host keyboard apparatus **1725** of FIG.

113 to direct keyboard output or remote control signals to devices that accept IR input signals. Such devices include WebTV, televisions, home entertainment systems, DVD players, digital video recorders, and the like.

[0478] FIG. **114** shows a perspective view of a multiple host keyboard apparatus **1730**. Five (5) host PC wireless dongles **1731**, **1732**, **1733**, **1734**, **1735** and a multiple host mouse apparatus **1736** are also shown. The multiple host mouse apparatus **1736** may operate independently of the multiple host keyboard apparatus **1730** or in conjunction with it. For example, the keyboard apparatus host PC selection buttons **1743**, **1744**, **1745**, **1746**, **1747** that select which host PC the keyboard output is directed towards may also simultaneously switch the multiple host mouse apparatus **1736** output to the same host PC. In this arrangement, only one host PC button needs to be pressed to change both the keyboard apparatus and the mouse apparatus output. Otherwise, 2 sets of buttons will be needed. In FIG. **114**, the mouse apparatus host PC selection buttons **1737**, **1738**, **1739**, **1741**, **1742** are located on the top left side of the multiple host keyboard apparatus **1730** while the keyboard apparatus host PC selection buttons **1743**, **1744**, **1745**, **1746**, **1747** are located on the top right. Representative wireless transmitting and receiving wireless module **1719** are shown in hidden outline.

[0479] FIG. **115** shows a perspective view of a multiple host keyboard apparatus **1750** (for wireless operation) with an integrated solar panel **1751**. The solar panel **1751** powers the keyboard electronics and the wireless dongle transmitter (not shown). If the wired host PC connections are all powered off or shut down, the multiple host keyboard apparatus **1750** may still communicate with other wireless host PCs if it is able to provide a secondary means of obtaining power for the keyboard apparatus electronics. Such secondary means may include batteries, an AC/DC adapter, or solar power.

[0480] FIG. **116** shows a perspective view of a multiple host keyboard apparatus **1755** with an integrated remote control similar to the multiple host keyboard apparatus **1720** of FIG. **112**. However, the multiple host keyboard apparatus **1755** of FIG. **116** has an IR repeater puck **1756** that extends the range of the IR signal from the multiple host keyboard apparatus **1755**. The signal to the IR repeater puck **1756** is supplied from the multiple host keyboard apparatus **1755** by longer-range RF frequencies. When the IR repeater puck **1756** receives the RF signal, the signal is demodulated and re-modulated for the signal requirements of the IR emitter **1757** on the IR repeater puck **1756**. The IR repeater puck **1756** is positioned closer to the IR devices than the multiple host keyboard apparatus **1755** itself. With the multiple host keyboard apparatus **1755** of FIG. **116**, the user may control a TV or a home entertainment system at considerable distances from the multiple host keyboard apparatus **1755** without leaving their desk to adjust such units manually.

[0481] FIG. **117** shows a perspective view of a multiple host keyboard apparatus **1760** that supports Bluetooth and other mobile device wireless standards such as IR. The multiple host keyboard apparatus **1760** of FIG. **117** permits output keystroke data from the multiple host keyboard apparatus **1760** to be directed to cellular phones **1761**, PDAs **1762**, and other devices at the flick of a switch on the multiple host keyboard apparatus **1760**. Applications include using the multiple host keyboard apparatus **1760** to compose SMS messages, input PDA data, and copy and paste content from one host PC to the targeted mobile device. A display **1759** is included in the multiple host keyboard apparatus **1760** to monitor the current functions of the keyboard apparatus. A liquid crystal display (LCD) may be used for the display **1759**.

[0482] FIG. **118** shows a perspective view of a mouse apparatus **1752** with an integrated USB cable powered battery charger. The battery charger may be designed to charge different battery chemistry (Lithium Ion, Ni-MH, Ni—Cd, Alkaline, and the like) and different battery sizes, types, or models. Shown are exemplary rechargeable battery **1754** which are removably inserted into associated battery cavity **1753** for charging. A status LED **1662** disposed on or within the mouse apparatus **1752** indicate when battery charging is active or complete. The mouse apparatus **1752** and the integrated battery charger receive their power from a wired connection **108** to a USB port typically located on a host PC.

[0483] The battery charger may be adapted to charge several AA and/or AAA battery types simultaneously. The battery charger section may also be adapted to charge cell phone batteries, similar small battery types, or provide a dock to charge small devices with an embedded rechargeable battery. Examples of such small devices include MP3 players, cell phones, and iPod™ branded devices. An iPod Shuffle or small MP3 player may also dock to a host device for downloading music or recharging through such a mouse apparatus. Also shown are left-click button **1467**, right-click button **1468**, scroll wheel **1469**, enclosure cover **1487**, retaining hook **1488**, and release button **1489** which share a common purpose with the mouse apparatus embodiments shown in FIGS. **72**, **79**, **80**, **81**, and the like.

[0484] It should be understood that the various mouse apparatus and keyboard apparatus devices depicted in FIGS. **1-117** are sub-categories of the computer apparatus referred to within this specification as the present invention. Generally, the mouse apparatus, the keyboard apparatus, and other apparatus depicted in FIGS. **1-117** may establish a wired or wireless connection to their host PCs or other electronic devices. Although a single cable is preferred, a wired approach does not always imply a single cable from the computer apparatus terminating in a single wired connector, nor does a wireless approach imply a single wireless communications channel to a mobile device or dongle connected to a host PC. Rather, multiple wires or cables each terminating with a specific connector may be used as necessary or desirable. Similarly, multiple wireless frequencies, channels, and wireless standards such as Bluetooth, w-USB, or Wi-Fi may be used in the case of a wireless approach. Furthermore, one or more specific devices, modules, or electronic circuitry within the computer apparatus may communicate with their host device or other devices with a wired connection, while other devices, modules, or electronic circuitry within the computer apparatus may communicate using a wireless approach. In each case, the choice of a wired, wireless, or combination approach depends on many design considerations including manufacturing costs, performance, usability, set-up time, reliability, battery life, power consumption, repair times, software, drivers, and the like. A wired connection implies a physical connection from the computer apparatus to a host PC, network device, gadget, and the like. The wired connection also implies one or more metallic wires capable of conducting electricity, a fiber optic link, or both. A wireless connection implies either an RF approach using antennas, receivers, transmitters, and/or transceivers, an optical approach using

optical or IR emitters and/or detectors, or a magnetic, capacitive, or inductive approach, or some combination of all such wireless approaches.

[0485] As will be apparent to those skilled in the art, the present invention may be embodied in other specific forms and variations without departing from the essential characteristics and true spirit thereof. Accordingly, the foregoing description is intended to be illustrative, but not limiting. The intended scope of the invention may thus include other embodiments that do not differ from the literal language of the claims. The scope of the present invention is accordingly defined as set forth in the following claims.

[0486] The embodiments of the invention in which an exclusive property or privilege is claimed are defined as follows.

What is claimed is:

1. A computer mouse apparatus comprising an enclosure, at least two displacement sensors, electronics and software associated with the function of said at least two displacement sensors, a wired or wireless connection to a host device, and at least one button to select icons or GUI objects on a display screen; wherein said electronics and software associated with the function of said at least two displacement sensors detect mouse apparatus pivot or rotational movements and facilitate the plotting of said pivot or rotational movements on a display screen as a curved or arched cursor path.

2. A multiple host keyboard apparatus comprising an enclosure, electronics and software associated with the function of said keyboard apparatus, a wired or wireless connection to one or more host PCs or related devices, at least one button to select icons or GUI objects on a display screen associated with a specific host PC or related device, and one or more buttons to direct the keyboard apparatus data output to at least two different host PCs or related devices.

3. A multiple host mouse apparatus comprising an enclosure, at least one displacement sensor, electronics and software associated with the function of said mouse apparatus, a wired or wireless connection to one or more host PCs or related devices, at least one button to select icons or GUI objects on a display screen associated with a specific host PC or related device, and one or more buttons to direct the mouse apparatus data output to at least two different host PCs or related devices.

* * * * *