Universal Serial Bus
Micro-USB Cables and Connectors
Specification

Revision 1.01

April 4, 2007

Microchip Ex. 1070, p. 1
Microchip v. Aptiv
PGR2024-00011

Revision History

Revision	Issue Date	Comment
0.6	1/30/2006	Revisions to all sections
0.7	3/24/2006	Added revised Micro-USB drawings to Rev.0.8
0.8	4/19/2006	Editorial changes and additions by Jan Fahllund (Nokia)
0.8b	4/26/2006	Corrections to the 0.8 version (based by comments from contributors)
0.9	6/7/2006	Corrections based on comments from the 0.8b version
1.0RC	8/2/2006	Added lubricant recommendation, LLRC delta change specified
1.01RC	11/10/2006	Editorial changes and addition based on Oct-06 USB-IF CCWG meeting.
1.02RC	12/10/2006	Shell material thickness tolerances changed so that material can be 0.25 mm or 0.3 mm; edited three pictures (Figure 4-10, 4-11 and 4-12).
1.03RC	12/11/2006	Two pictures edited (Figure 4-8 and 4-9). In fig 4-8 max height to be 2.8mm MAX. In fig 4-9 R0.25mm MAX to be R0.30mm MAX.
1.0RC3	12/19/2006	For BoD approval
1.0	1/12/2007	Approved
1.0	1/22/2007	Cosmetic edits for publication
1.01	4/4/2007	Editorial corrections and additions to contributor list. Reinserted shell and plug material requirements as section 6.10. Clarified wording on Plating Recommendations.

Copyright © 2007 USB Implementers Forum, Inc. (USB-IF).
All rights reserved.

A LICENSE IS HEREBY GRANTED TO REPRODUCE THIS SPECIFICATION FOR INTERNAL USE ONLY. NO OTHER LICENSE, EXPRESS OR IMPLIED, BY ESTOPPEL OR OTHERWISE, IS GRANTED OR INTENDED HEREBY.

USB-IF AND THE AUTHORS OF THIS SPECIFICATION EXPRESSLY DISCLAIM ALL LIABILITY FOR INFRINGEMENT OF INTELLECTUAL PROPERTY RIGHTS, RELATING TO IMPLEMENTATION OF INFORMATION IN THIS SPECIFICATION. USB-IF AND THE AUTHORS OF THIS SPECIFICATION ALSO DO NOT WARRANT OR REPRESENT THATSUCH IMPLEMENTATION(S) WILL NOT INFRINGE THE INTELLECTUAL PROPERTY RIGHTS OF OTHERS.

THIS SPECIFICATION IS PROVIDED "AS IS" AND WITH NO WARRANTIES, EXPRESS OR IMPLIED, STATUTORY OR OTHERWISE. ALL WARRANTIES ARE EXPRESSLY DISCLAIMED. NO WARRANTY OF MERCHANTABILITY, NO WARRANTY OF NON-INFRINGEMENT, NO WARRANTY OF FITNESS FOR ANY PARTICULAR PURPOSE, AND NOWARRANTY ARISING OUT OF ANY PROPOSAL, SPECIFICATION, OR SAMPLE.

IN NO EVENT WILL USB-IF OR USB-IF MEMBERS BE LIABLE TO ANOTHER FOR THE COST OF PROCURING SUBSTITUTE GOODS OR SERVICES, LOST PROFITS, LOSS OF USE, LOSS OF DATA OR ANY INCIDENTAL, CONSEQUENTIAL, INDIRECT, ORSPECIAL DAMAGES, WHETHER UNDER CONTRACT, TORT, WARRANTY, OR OTHERWISE, ARISING IN ANY WAY OUT OF THE USE OF THIS SPECIFICATION, WHETHER OR NOT SUCHPARTY HAD ADVANCE NOTICE OF THE POSSIBILITY OF SUCH DAMAGES.

All product names are trademarks, registered trademarks, or service marks of their respective owners.

Microchip Ex. 1070, p. 2
Microchip v. Aptiv
PGR2024-00011

Contributors

Mark Rodda, (editor) Motorola
Jan Fahllund, (editor) Nokia
Jim Koser, (CCWG Chairman), Foxconn
Glen Chandler, Advanced-Connectek (Acon)
Charles Wang, Advanced-Connectek (Acon)
Toshinori Sasaki, Across Techno
Minoru Ohara, Allion
Brad Brown, ATL
Christopher Mattson, ATL
Marcus Darrington, ATL
Jaremy Flake, ATL Technology
George Olear, Contech Research
Roy Ting, Elka
Sophia Liu, ETC
Bill Northey, FCI
Tsuneki Watanabe, Foxconn
Jim Zhao, Foxconn
David Ko, Foxconn
Jong Tseng, Foxconn
Jack Lu, Foxlink
Tim Chang, Foxlink
Sathid Inthon, Fujikura
Toshi Mimura, Fujijura
Alan Berkema, Hewlett-Packard
Karl Kwiat, Hirose
Shinya Tono, Hirose
Kazu Ichikawa, Hirose
Ryozo Koyama, Hirose
Yousuke Takeuchi, Hirose
Tsuyoshi Kitagawa, Hosiden
Jim Eilers, Hosiden
Kazuhiro Saito, JAE
Ron Muir, JAE
Mark Saubert, JAE
Yasuhira Miya, JST
Takahiro Diguchi, JST
Yoichi Nakazawa, JST
Kevin Fang, Longwell Electronics
Morgan Jair, Main Super Co.
Tom Kawaguchi, Matsushita Electric Works
Ron Ward, Matsushita Electric Works
Satoshi Yamamoto, Matsushita Electric Works
Yasuhiko Shinohara, Mitsumi
Atsushi Nishio, Mitsumi
Hitoshi Kawamura, Mitsumi
Scott Sommers, Molex
Kevin Delaney, Molex
Kieran Wright, Molex
Padraig McDaid, Molex
Mikko Poikselka, Molex
Sam Liu, Newnex Technology Corp.
Richard Petrie, Nokia
Kai Silvennoinen, Nokia
Panu Ylihaavisto, Nokia
Arthur Zarnowitz, Palm
Douglas Riemer, SMK
Eric Yagi, SMK
Abid Hussain, Summit Microelectronics
Kaz Osada, Tyco
Masaru Ueno, Tyco
Yoshikazu Hirata, Tyco
Ed Beeman, USB Implementers Forum
Mark Paxson, USB Implementers Forum

Microchip Ex. 1070, p. 3
Microchip v. Aptiv
PGR2024-00011

Table of Contents

1 Introduction 6
1.1 General 6
1.2 Objective of the Specification 6
1.3 Intended Audience/Scope 6
1.4 Related Documents 6

2 Acronyms and Terms 7

3 Significant Features 8
3.1 USB 2.0 Specification Compliance 8
3.2 On-The-Go Device 8
3.3 Connectors 8
3.4 Compliant Cable Assemblies 8
3.5 Plug Overmolds 9

4 Cables and Connectors 10
4.1 Introduction 10
4.2 Micro-Connector Mating 10
4.3 Color Coding 11
4.4 Device, Cable and Adapter Delays 11
4.5 Compliant Usage of Connectors and Cables 12
4.5.1 Cables 12
4.5.2 Overmolds 12
4.5.3 Mechanical Interfaces 12
4.5.4 Surface mount standard version drawings 12
4.5.5 DIP-type and Midmount-type receptacles 12
4.5.6 Connector Keying 12
4.5.7 Right Angle Plugs 12
4.5.8 Adapters 13
4.6 Drawings 13

5 Electrical Compliance Requirements 33
5.1 Data Rates Beyond USB 2.0 (480Mb/s -->) 33
5.2 Low Level Contact Resistance 33
5.3 Contact Current Rating 33
5.3.1 Signal Contacts Only (2, 3, and 4) 33
5.3.2 With Power Applied Contacts (1 and 5) 33

6 Mechanical Compliance Requirements 34
6.1 Operating Temperature Range 34
6.1.1 Option I 34
6.1.2 Option II 34
6.2 Insertion Force 34
6.3 Extraction Force 34
6.4 Plating 34
6.4.1 Option I 35
6.4.2 Option II 35
6.5 Solderability 35
6.6 Peel Strength (Reference Only) 35
6.7 Wrenching Strength (Reference Only) 35
6.8 Lead Co-Planarity 35
6.9 RoHS Compliance 36
6.10 Shell & Latch Materials 36

Microchip Ex. 1070, p. 4
Microchip v. Aptiv
PGR2024-00011

Figures

Figure 4-1 Micro-A to Micro-B Cable 14
Figure 4-2 Standard-A to Micro-B Cable 15
Figure 4-3 Micro-A to Captive Cable 16
Figure 4-4 Micro-A Plug Overmold, Straight 17
Figure 4-5 Micro-B Plug Overmold, Straight 18
Figure 4-6 Micro-A Plug Interface 19
Figure 4-7 Micro-B Plug Interface 20
Figure 4-8 Micro-A/B Plug Interface (Cut-section) 21
Figure 4-9 Micro-AB receptacle interface 22
Figure 4-10 Micro-B receptacle interface 23
Figure 4-11 Micro-AB Receptacle Design 24
Figure4-12 Micro-B Receptacle Design 25
Figure 4-13 Micro-A Plug Blockage 26
Figure 4-14 Micro-B Plug Blockage 27
Figure 4-15 Micro-A Plug, Side Right Angle 28
Figure 4-16 Micro-A Plug, Down Right Angle 29
Figure 4-17 Micro-B Plug, Side Right Angle 30
Figure 4-18 Micro-B Plug, Down Right Angle 31
Figure 4-19 Adapter, Standard-A receptacle to Micro-A plug 32

Tables

Table 4-1. Plugs Accepted By Receptacles 10
Table 4-2. Micro-A Plug Pin Assignments 10
Table 4-3. Color Coding for Plugs and Receptacles 11
Table 4-4. Maximum Delay for Micro-Connector and Cable 11
Table 4-5. Maximum Delay for Standard Connector Cable 11

Microchip Ex. 1070, p. 5
Microchip v. Aptiv
PGR2024-00011

1 Introduction

1.1 General

USB has become a popular interface for exchanging data between cell phone and portable devices. Many of these devices have become so small it is impossible to use standard USB components as defined in the USB 2.0 specification. In addition the durability requirements of the Cell Phone and Portable Devices market exceed the specifications of the current interconnects. Since Cell Phones and other small Portable Devices are the largest market potential for USB, this specification is addressing this very large market while meeting all the requirements for electrical performance within the USB 2.0 specification.

1.2 Objective of the Specification

The purpose of this document is to define the requirements and features of a Micro-USB connector that will meet the current and future needs of the Cell Phone and Portable Devices markets, while conforming to the USB 2.0 specification for performance, physical size and shape of the Micro-USB interconnect.

This is not a stand-alone document. Any aspects of USB that are not specifically changed by this specification are governed by the USB 2.0 Specification and USB On-The-Go Supplement.

1.3 Intended Audience/Scope

Cell phone and Portable Devices have become so thin that the current Mini-USB does not fit well within the constraints of future designs. Additional requirements for a more rugged connector that will have durability past 10,000 cycles and still meet the USB 2.0 specification for mechanical and electrical performance was also a consideration. The Mini-USB could not be modified and remain backward compatible to the existing connector as defined in the USB OTG specification.

1.4 Related Documents

USB 2.0

USB OTG Supplement

Microchip Ex. 1070, p. 6
Microchip v. Aptiv
PGR2024-00011

2 Acronyms and Terms

This chapter lists and defines terms and abbreviations used throughout this specification.

A-Device	A device with a Type-A plug inserted into its receptacle. The A-device supplies power to VBUS and is host at the start of a session. If the A-device is On-The-Go, it may relinquish the role of host to an On-The-Go B-device under certain conditions,
Application	A generic term referring to any software that is running on a device that can control the behavior or actions of the USB port(s) on a device.
B-Device	A device with a Type-B plug inserted into its receptacle. The B-device is a peripheral at the start of a session. If the B-device is OTG, it may be granted the role of host from an OTG A-device.
DIP-type	A connector with contact and shield solder tails that are soldered through the printed circuit board
FS	Full Speed (max 12Mb/s)
Higher than HS	(480Mb/s ---> 5 Gb/s)
HS	High Speed (max 480 Mb/s)
Host	A physical entity that is attached to a USB cable and is acting in the role of the USB host as defined in the USB Specification, Revision 2.0. This entity initiates all data transactions and provides periodic Start of Frames.
HNP	Host Negotiation Protocol
ID	Identification. Denotes the pin on the Micro connectors that is used to differentiate a Micro-A plug from a Micro-B plug.
LS	Low Speed (max 1,5 Mb/s)
Midmount-type	A connector that is mounted in a cut-out in the printed circuit board between the top and bottom surfaces.
OTG	On-The-Go
OTG device	A device with the host and peripheral capabilities
Peripheral	A physical entity that is attached to a USB cable and is currently operating as a “device” as defined in the USB Specification, Revision 2.0. The Peripheral responds to low level bus requests from the Host.
PCB	Printed circuit board
USB	Universal Serial Bus
USB-IF	USB Implementers Forum

Microchip Ex. 1070, p. 7
Microchip v. Aptiv
PGR2024-00011

3 Significant Features

This section identifies the significant features of the Micro-USB specification. The purpose of this section is not to present all the technical details associated with each major feature, but rather to highlight its existence. Where appropriate, this section references other parts of the document where further details can be found.

3.1 USB 2.0 Specification Compliance

Any device with Micro-USB features is first and foremost a USB peripheral that is compliant with the USB 2.0 specification.

3.2 On-The-Go Device

Any OTG Micro-USB device shall conform to the OTG requirements as set forth in the On-The-Go Supplement to the USB 2.0 Specification.

3.3 Connectors

The USB 2.0 specification defines the following connectors:

- Standard-A plug and receptacle,
- Standard-B plug and receptacle, and
- Mini-B plug and receptacle.

The Micro-USB specification defines the following additional connectors:

- Micro-B plug and receptacle
- Micro-AB receptacle
- Micro-A plug.

The Micro-AB receptacle is only allowed on OTG products. All other uses of the Micro-AB receptacle are prohibited. The Micro-AB receptacle accepts either a Micro-A plug or a Micro-B plug.

It is recommended that the Micro-AB continue to support HNP as requested and support full functionality as a peripheral when a Micro-B plug is inserted.

3.4 Compliant Cable Assemblies

The USB 2.0 specification defines the following cables:

- Standard-A plug to Standard–B plug,
- Standard-A plug to Mini-B plug, and
- Captive cable with Standard-A plug.

The Micro-USB specification defines the following additional cables:

- Micro-A plug to Micro-B plug,
- Micro-A plug to Standard-A receptacle
- Micro-B plug to Standard-A plug, and
- Hardwired Captive cable with Micro-A plug. (Hardwired Captive cable is a cable, connected internally to a device, which is not designed to be removed by the end user of that device.)

No other types of cables are allowed by either the USB specification, or by the OTG supplement. Cables are not allowed to have receptacles on either end unless they meet the mechanical and electrical requirements of adapters defined in this document.

Microchip Ex. 1070, p. 8
Microchip v. Aptiv
PGR2024-00011

3.5 Plug Overmolds

The Micro-USB specification constrains the size and the shape of the overmolds for the Micro-A and Micro-B plugs.

The Micro-A plug's overmold has a rectangular shape, and the Micro-B plug's overmold is rectangular with chamfers. This allows easy recognition and differentiation of the two plugs by the consumer See pictures Figure 4-4 and Figure 4-5.

Microchip Ex. 1070, p. 9
Microchip v. Aptiv
PGR2024-00011

4 Cables and Connectors

4.1 Introduction

This chapter provides the mechanical and electrical specifications for the cables, connectors and cable assemblies used to interconnect devices as well as constraints on the design of the overmolds for the Micro-A and Micro-B plugs.

4.2 Micro-Connector Mating

The following table summarizes the plugs accepted by each of the receptacles.

Table 4-1. Plugs Accepted By Receptacles

Receptacle	Plugs Accepted
Standard-A	Standard-A
Standard-B	Standard-B
Mini-B	Mini-B
Micro-B	Micro-B
Micro-AB	Micro-A or Micro-B

The usage and wiring assignments of the five pins in the Micro-A plug are defined in the following table.

Table 4-2. Micro-A Plug Pin Assignments

Contact Number	Signal Name	Typical Wiring Assignment
1	VBUS	Red
2	D-	White
3	D+	Green
4	ID	<Ra_PLUG_ID
5	GND	Black
Shell	Shield	Drain Wire

The ID pin on a Micro-A plug shall be connected to the GND pin. The ID pin on a Micro-B plug is not connected or is connected to ground by a resistance of greater than Rb_PLUG_ID (100kΩ MIN). An On-The-Go device is required to be able to detect whether a Micro-A or Micro-B plug is inserted by determining if the ID pin resistance to ground is less than Ra_PLUG_ID (10Ω MAX) or if the resistance to ground is greater than Rb_PLUG_ID . Any ID resistance less than Ra_PLUG_ID shall be treated as ID = FALSE and any resistance greater than Rb_PLUG_ID shall be treated as ID = TRUE.

Microchip Ex. 1070, p. 10
Microchip v. Aptiv
PGR2024-00011

4.3 Color Coding

The following colors are mandated for the plastic inside the Micro-USB connectors defined in this specification.

Table 4-3. Color Coding for Plugs and Receptacles

Connector	Color
Micro-A plug	White
Micro-B receptacle	Black
Micro-B plug	Black
Micro-AB receptacle	Gray

4.4 Device, Cable and Adapter Delays

In Figure 7-11 of the USB 2.0 specification, four test planes are defined along the transmission path from the host transceivers to the peripheral transceivers. These test planes (TP) are as follows:

- TP1: pins of host transceiver chip
- TP2: contact points of host Standard-A receptacle
- TP3: contact points of peripheral Standard-B or Micro-B receptacle
- TP4: pins of peripheral transceiver chip

The maximum total delays are as follows:

- On-The-Go device - TP1 to TP2: 1 ns
- Adapter: 1 ns
- Any cable with a Micro-A or Micro-B plug: 10 ns

The maximum delays for the two worst cases of connection are shown in the following tables.

Table 4-4. Maximum Delay for Micro-Connector and Cable

Location	Delay Time
USB 2.0 Compliant Host – TP1 to TP2	3 ns
Standard-A receptacle to Micro-A plug adapter	1 ns
Micro-A plug to Micro-B plug cable	10 ns
USB 2.0 Compliant B-device – TP3-TP4	1 ns
Total	15 ns

Table 4-5. Maximum Delay for Standard Connector Cable

Location	Delay Time
On-The-Go Compliant Device – TP1 to TP2	1 ns
Micro-A plug to Standard-A receptacle adapter	1 ns
Standard-A plug to Standard-B plug cable	26 ns
USB 2.0 Compliant B-device – TP3 to TP4	1 ns
Total	29 ns

Microchip Ex. 1070, p. 11
Microchip v. Aptiv
PGR2024-00011

4.5 Compliant Usage of Connectors and Cables

Cable assemblies and connectors not described below or not allowed by other amendments to the USB specification are not compliant with the USB specification and may not be labeled as such.

4.5.1 Cables

The cables allowed by the Micro-USB specification are shown in Figure 4-1, Figure 4-2, and Figure 4-3. Cables must have a propagation delay of 10 ns or less, have a physical length of no more than 2.0 meters, and meet all other requirements of a USB cable.

4.5.2 Overmolds

The size and shape of the Micro-A and Micro-B plug overmolds must conform to the constraints shown in Figure 4-4 and Figure 4-5 .

4.5.3 Mechanical Interfaces

The mechanical interface dimensions for the Micro-A and Micro-B plugs are shown in Figure 4-6 and Figure 4-7. Mechanical interface dimensions for Micro-AB and Micro-B receptacles are shown in Figure 4-9 and Figure 4-10.

4.5.4 Surface mount standard version drawings

By following these instructions, receptacles from different manufacturers can be used interchangeably on the same printed circuit board (PCB). In the case of the “surface mount standard version”, the dimensions of the contact tail and shield tail must comply with figures 4-11 and 4-12.

Note: PCB-layout drawings are included for reference only.

Figure 4-11 and Figure4-12 shows designs for the Micro-AB and Micro-B receptacles respectively.

4.5.5 DIP-type and Midmount-type receptacles

DIP-type (contact and shield tails soldered through PCB) and Midmount-type (connector that is mounted in a cut-out in the printed circuit board between the top and bottom surfaces.) receptacle connectors are not defined in this standards document. These mounting styles are allowed under the standard as long as all intermating conditions are met. Mechanical dimensions and mechanical durability values may vary from the Surface mount standard connector but must comply with all minimum values.

4.5.6 Connector Keying

This Micro connector series has been designed so as to prevent the Micro-A and Micro-B plugs from being incorrectly inserted into a receptacle. The amount of metal blocking various possible incorrect insertions is shown in Figure 4-13 and Figure 4-14, and is always greater than 0.35 mm.

4.5.7 Right Angle Plugs

The overmolds for right / down angle plugs are required to comply with the same shape constraints that apply to straight plugs. Reference drawings for right / down angle plugs are shown in Figure 4-15, Figure 4-16, Figure 4-17 and Figure 4-18 .

Microchip Ex. 1070, p. 12
Microchip v. Aptiv
PGR2024-00011

4.5.8 Adapters

Requirements:

- The propagation delay of the adapter shall be less than 1 ns.
- The physical length shall not exceed 150 mm.
- The resistance of the adapter through VBUS and GND, including contacts, shall not exceed 70 mΩ.

4.5.8.1 Standard-A receptacle to Micro-A plug

This adapter is used to connect a cable with a Standard-A plug to an On-The-Go device that has a Micro-AB receptacle. A reference drawing for this adapter is shown in Figure 4-19.

4.6 Drawings

This section contains the mechanical drawings that are referenced in the previous section.

Microchip Ex. 1070, p. 13
Microchip v. Aptiv
PGR2024-00011

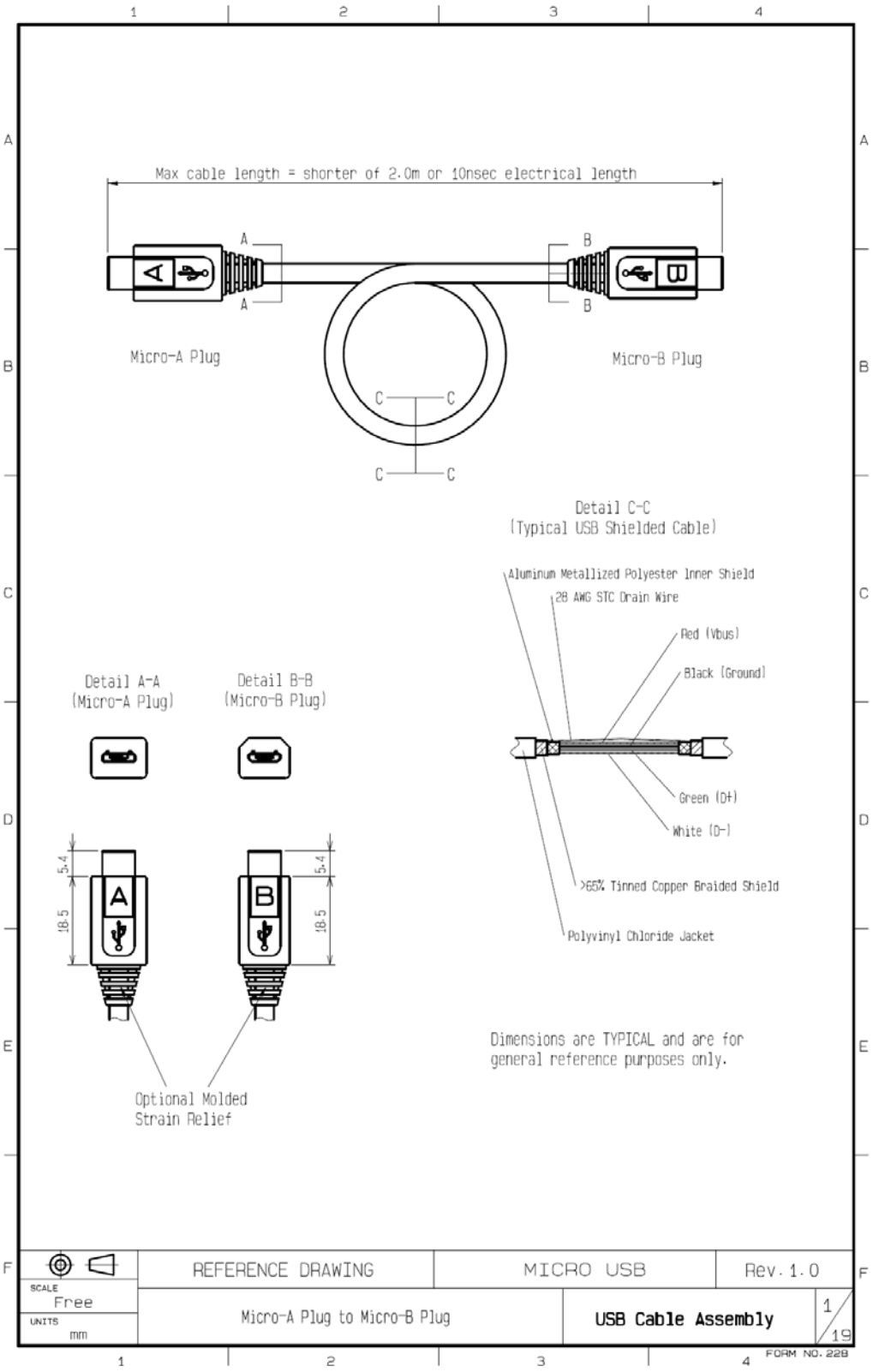

Figure 4-1 Micro-A to Micro-B Cable

Microchip Ex. 1070, p. 14
Microchip v. Aptiv
PGR2024-00011

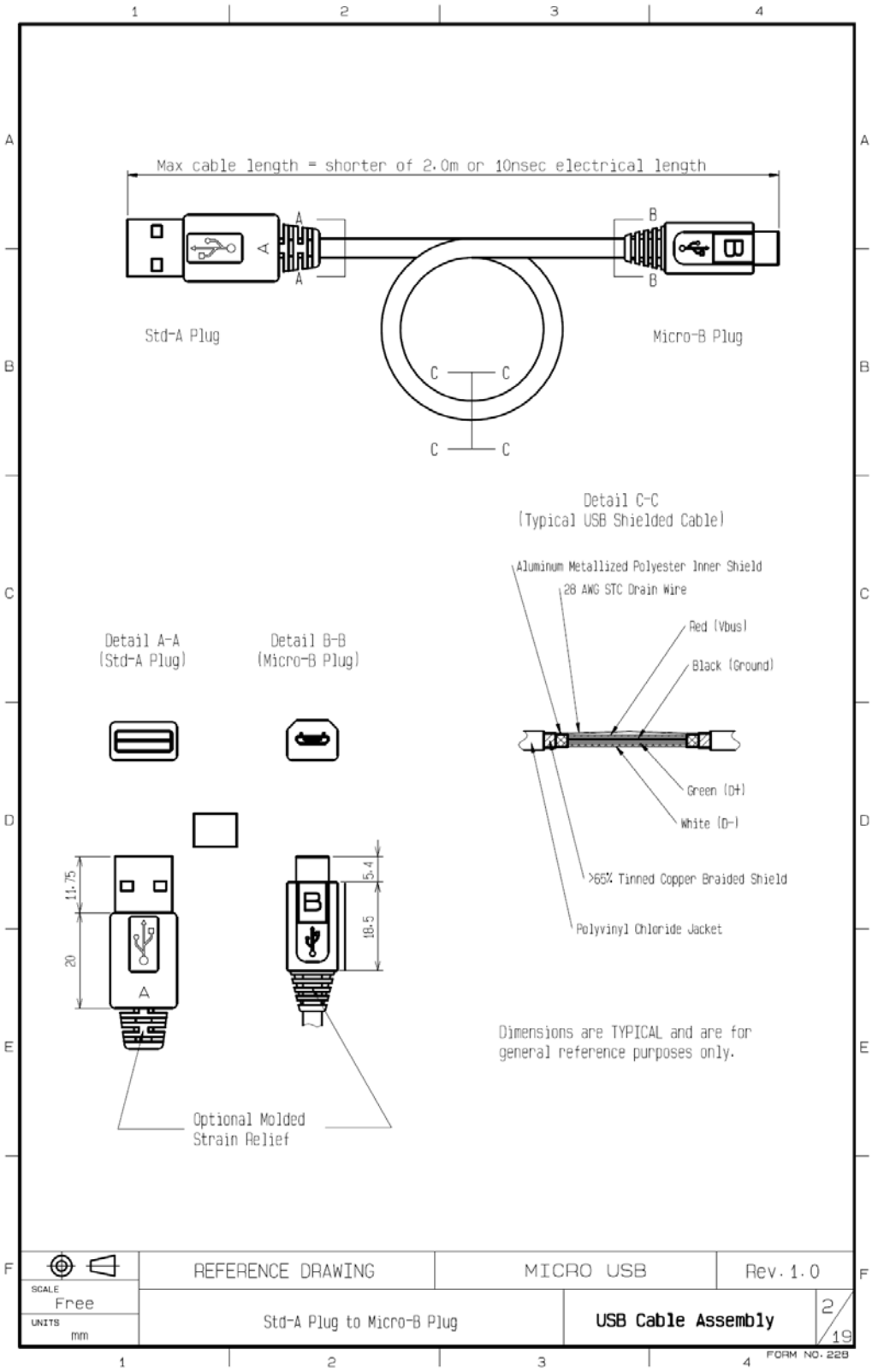

Figure 4-2 Standard-A to Micro-B Cable

Microchip Ex. 1070, p. 15
Microchip v. Aptiv
PGR2024-00011

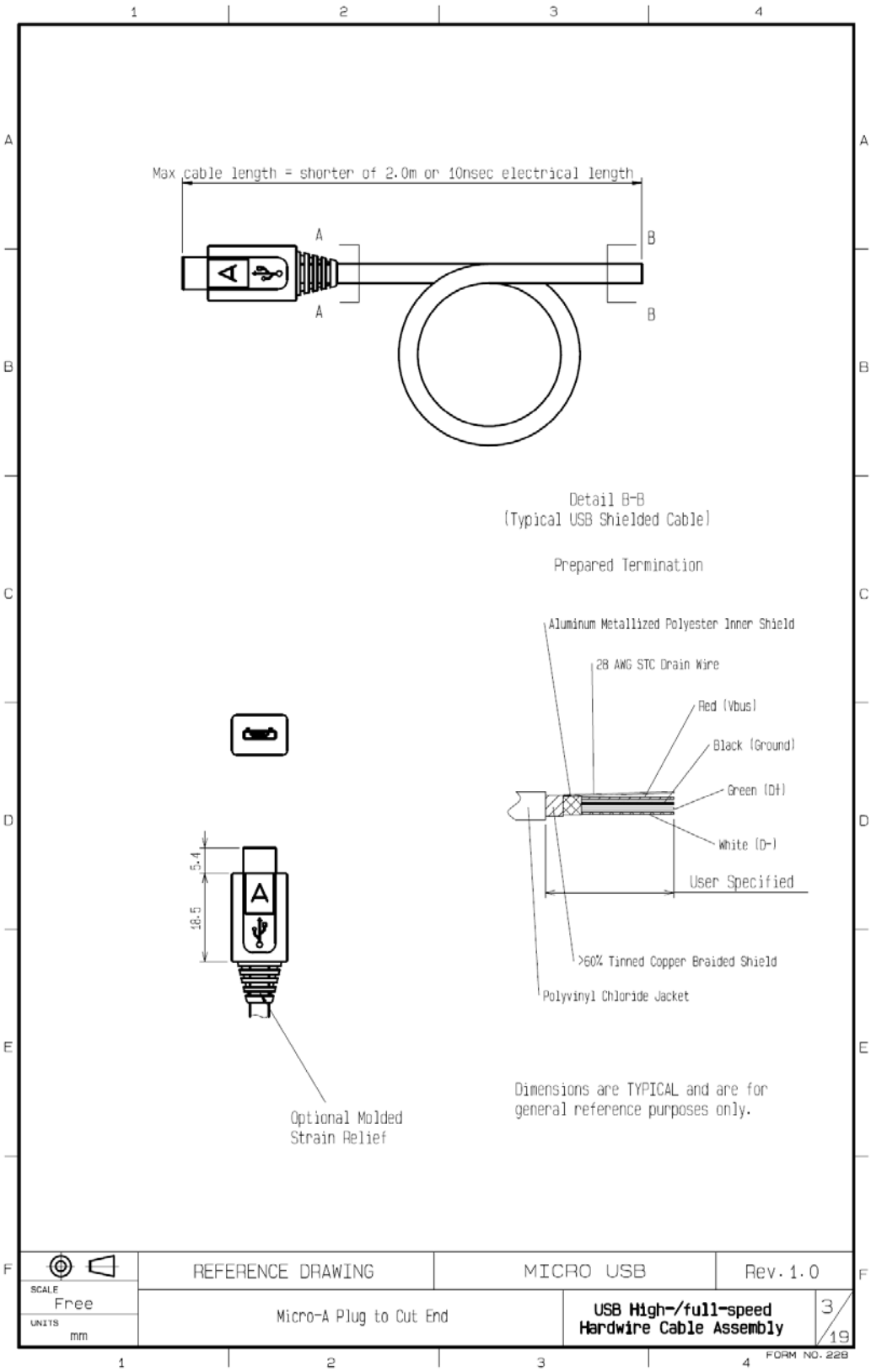

Figure 4-3 Micro-A to Captive Cable

Microchip Ex. 1070, p. 16
Microchip v. Aptiv
PGR2024-00011

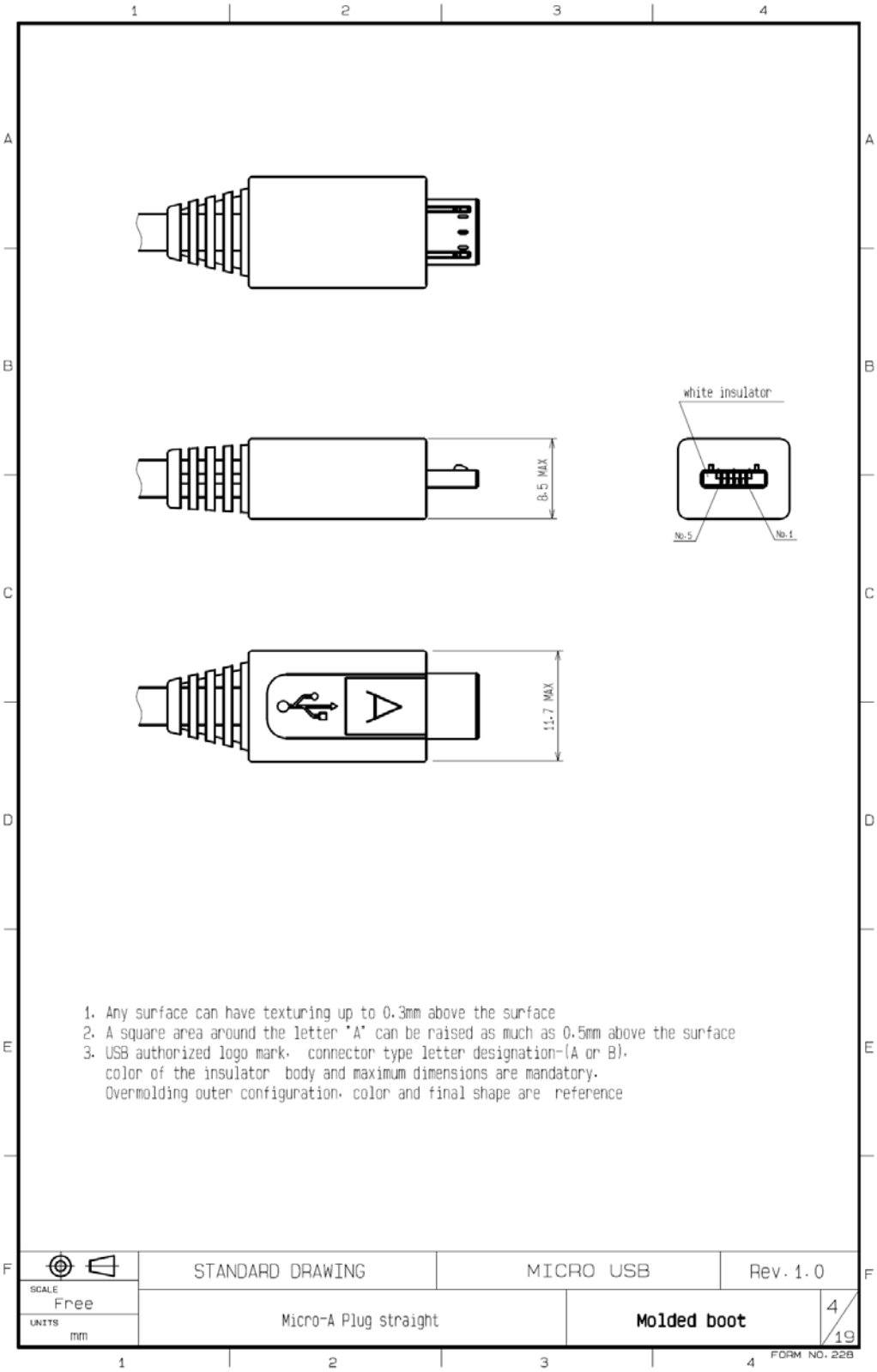

Figure 4-4 Micro-A Plug Overmold, Straight

Microchip Ex. 1070, p. 17
Microchip v. Aptiv
PGR2024-00011

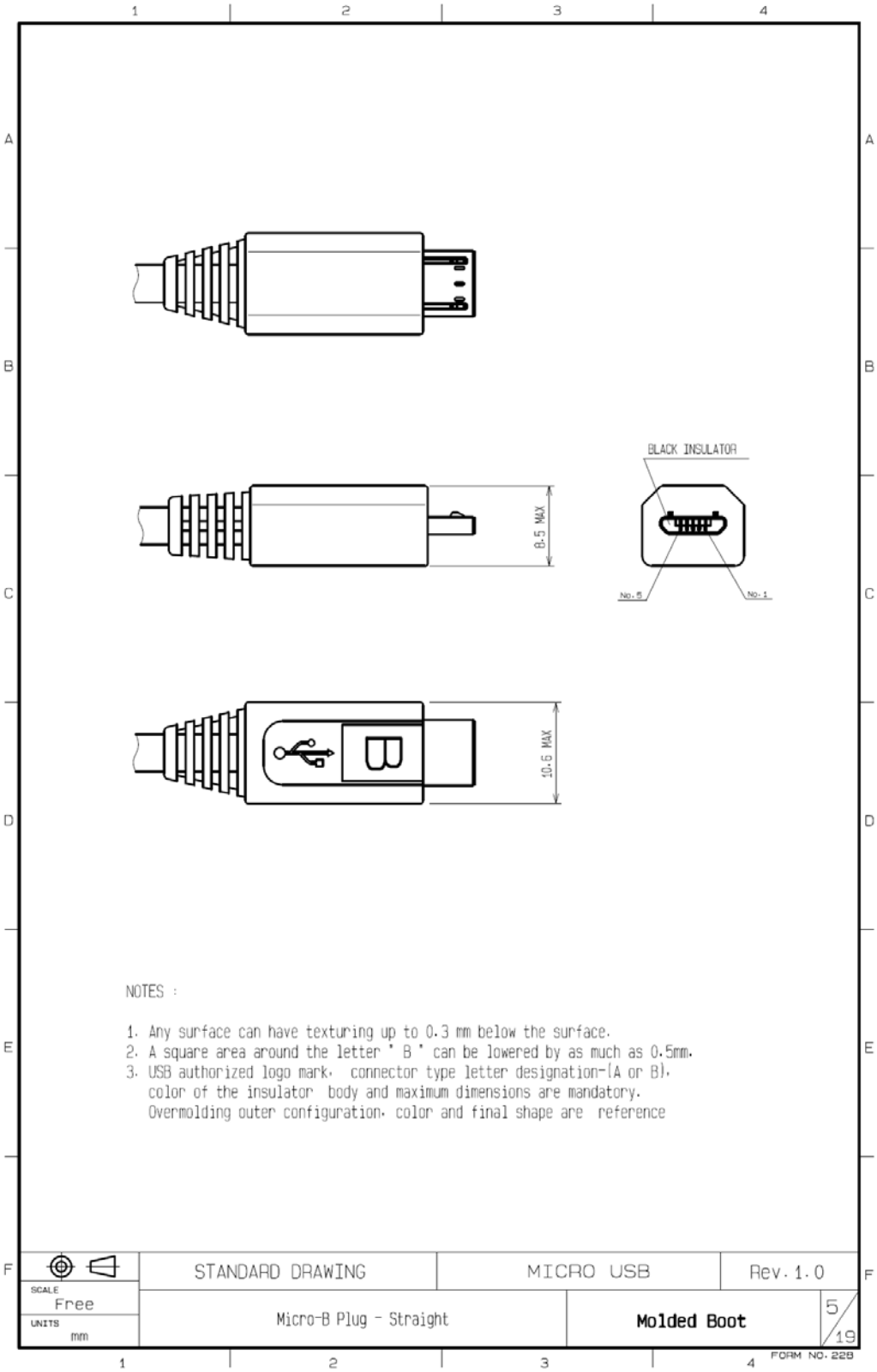

Figure 4-5 Micro-B Plug Overmold, Straight

Microchip Ex. 1070, p. 18
Microchip v. Aptiv
PGR2024-00011

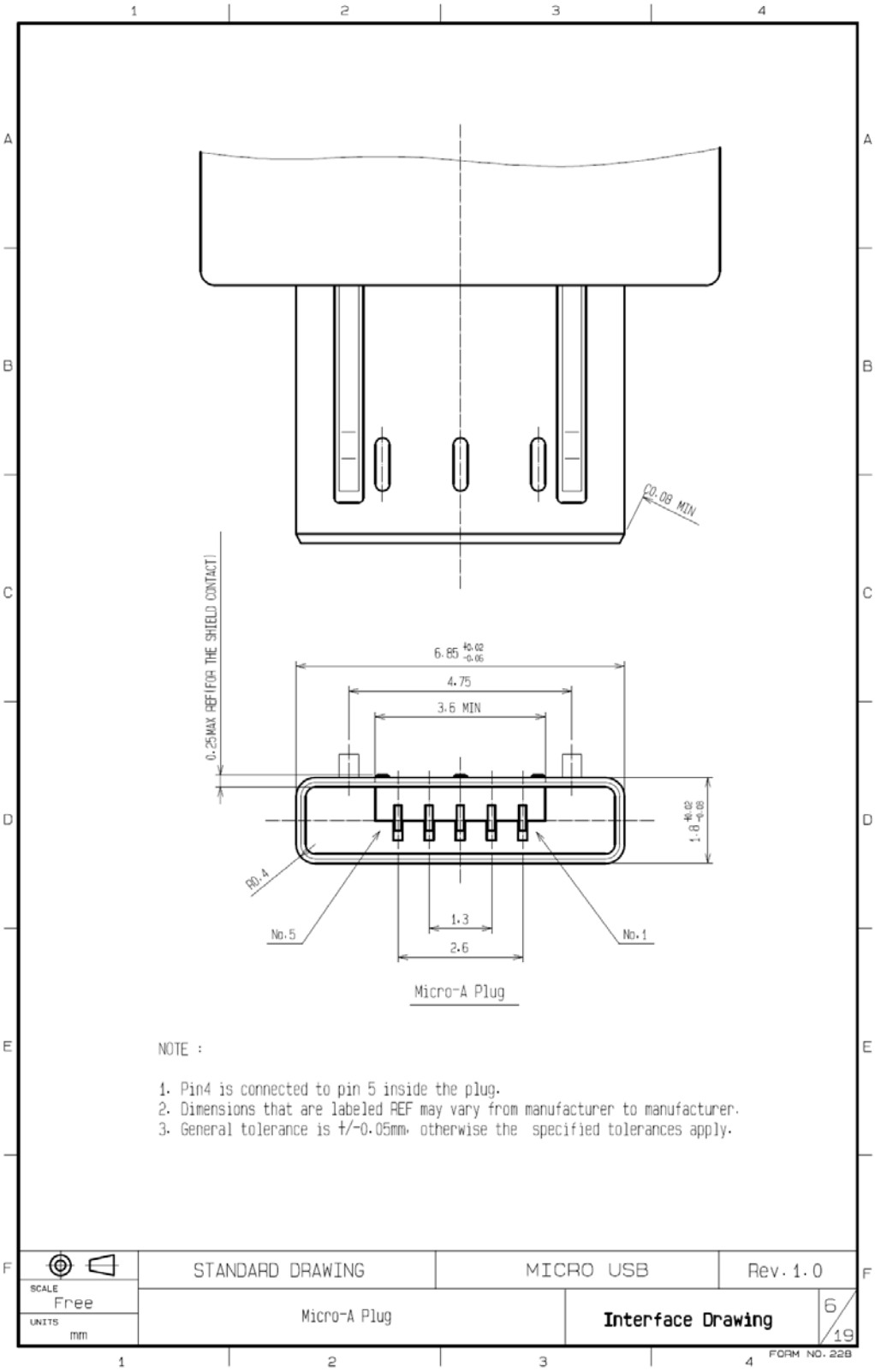

Figure 4-6 Micro-A Plug Interface

Microchip Ex. 1070, p. 19
Microchip v. Aptiv
PGR2024-00011

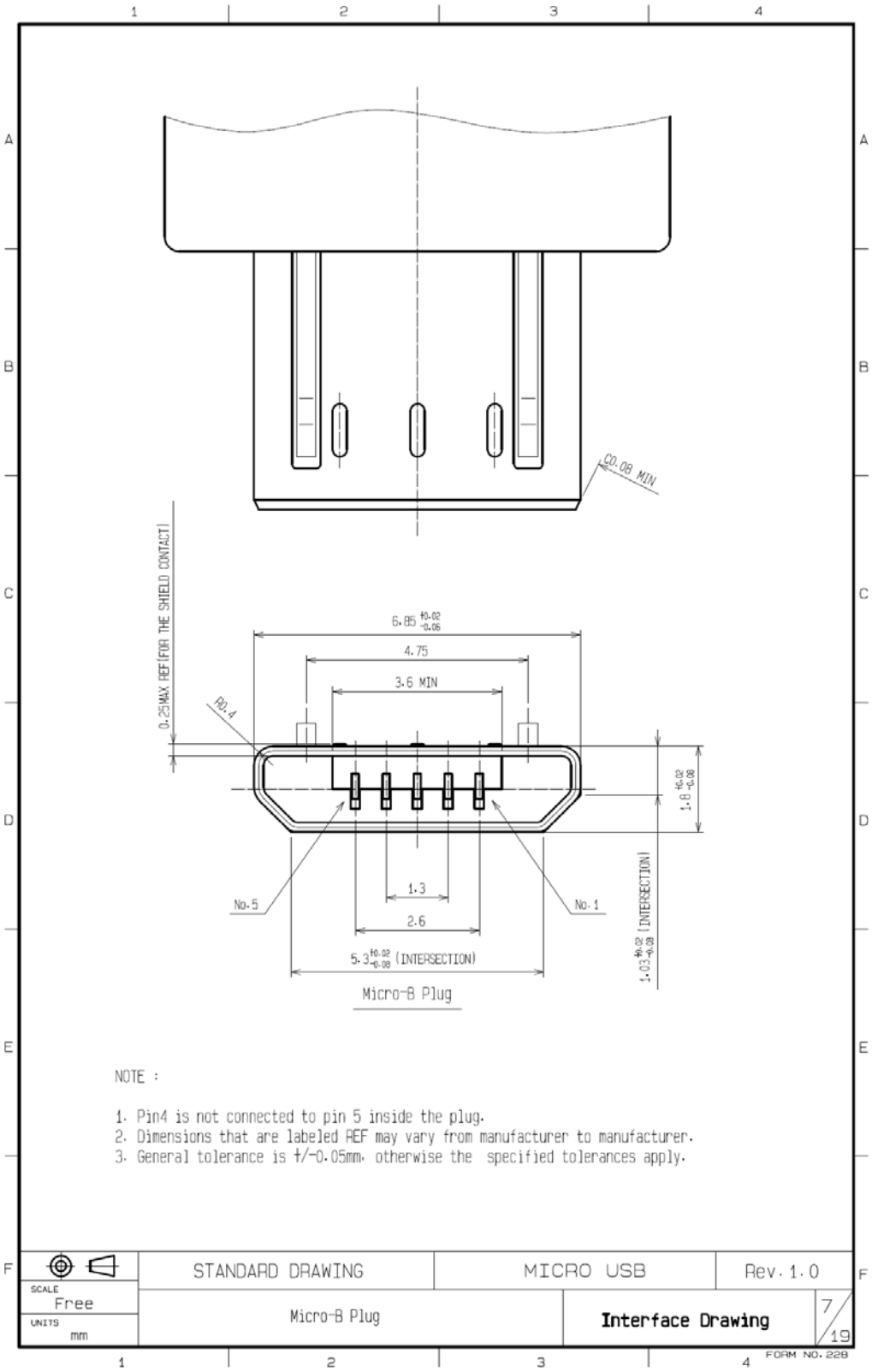

Figure 4-7 Micro-B Plug Interface

Microchip Ex. 1070, p. 20
Microchip v. Aptiv
PGR2024-00011

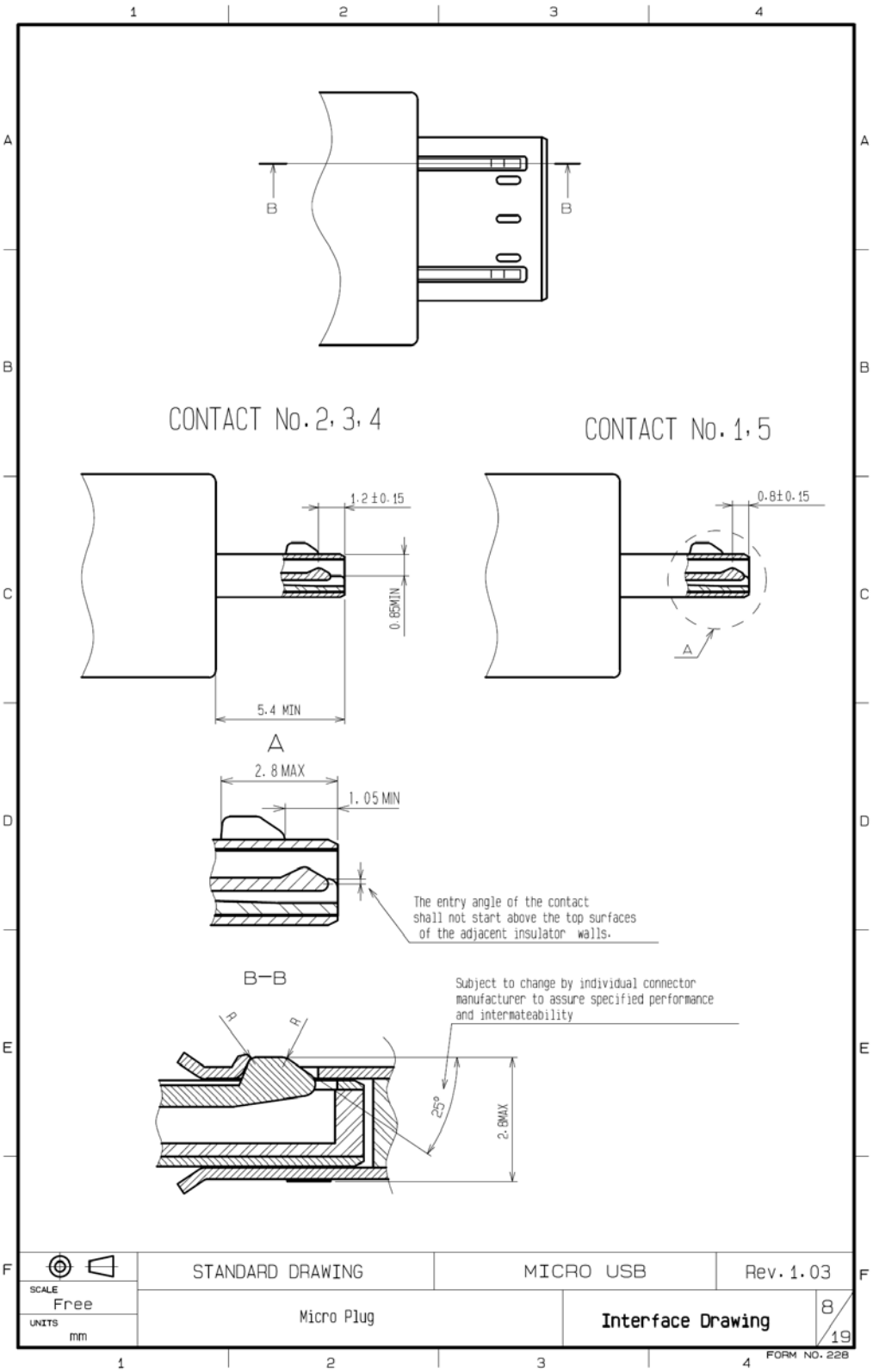

Figure 4-8 Micro-A/B Plug Interface (Cut-section)

Microchip Ex. 1070, p. 21
Microchip v. Aptiv
PGR2024-00011

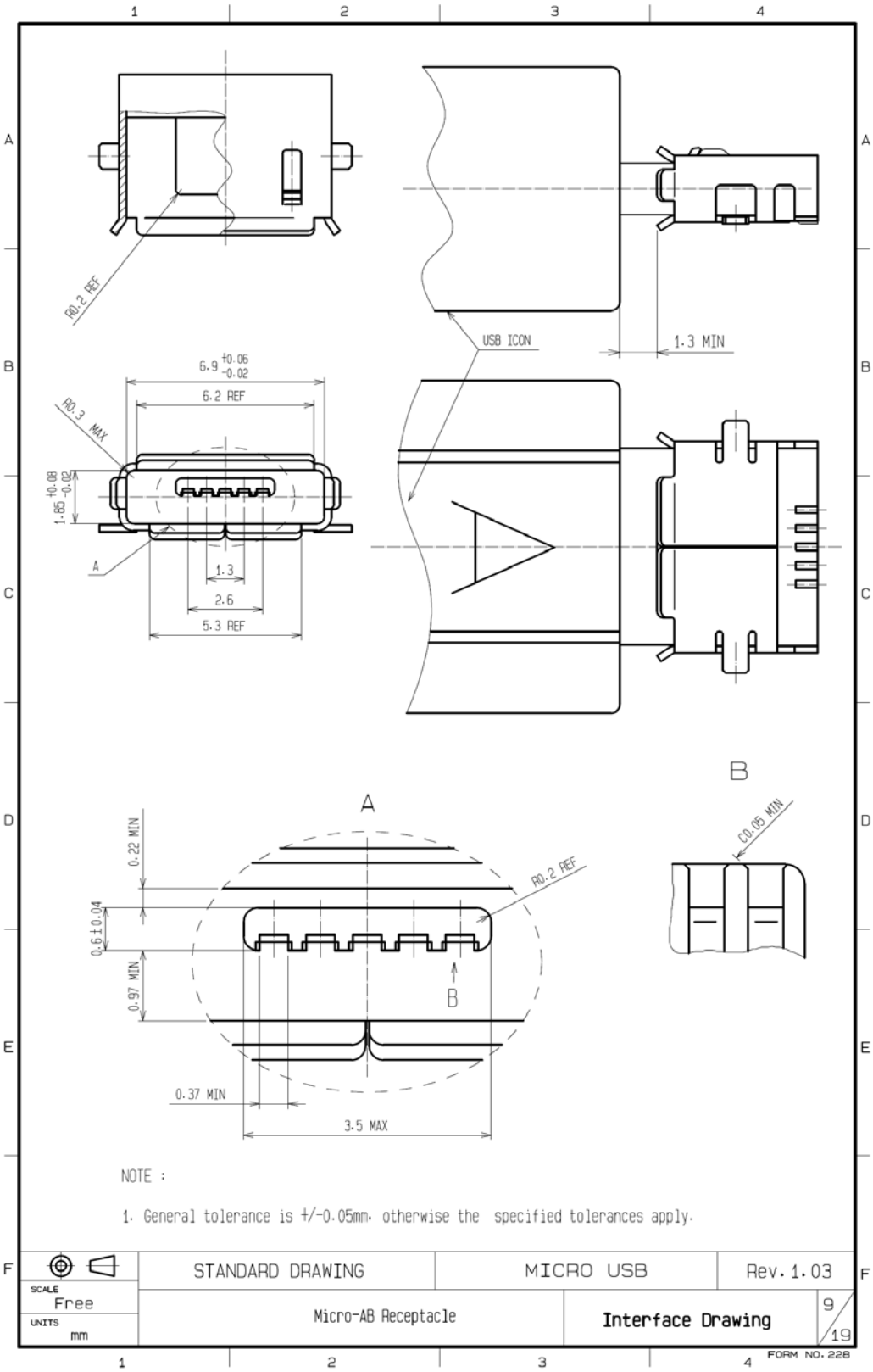

Figure 4-9 Micro-AB receptacle interface

Microchip Ex. 1070, p. 22
Microchip v. Aptiv
PGR2024-00011

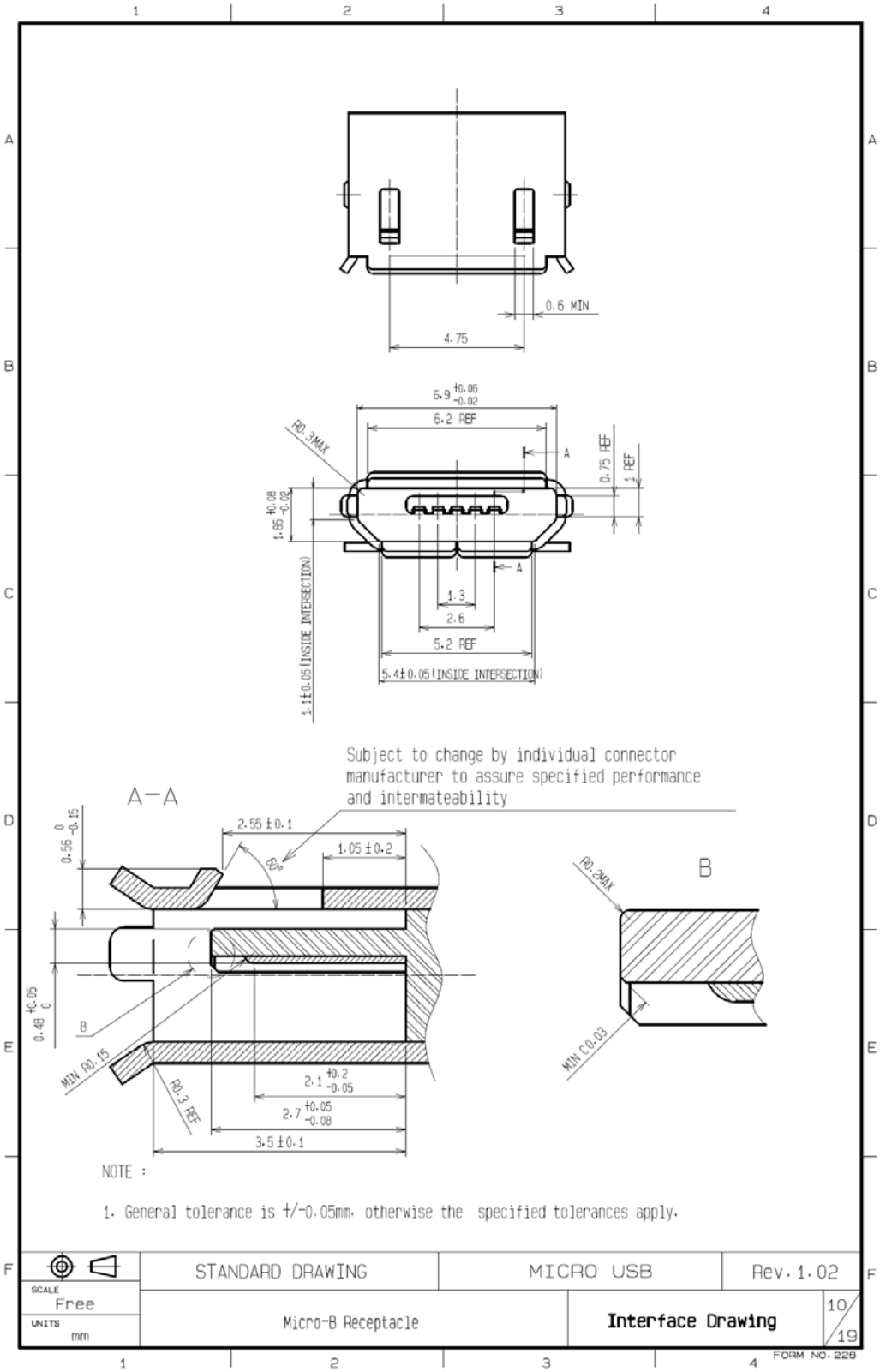

Figure 4-10 Micro-B receptacle interface

Microchip Ex. 1070, p. 23
Microchip v. Aptiv
PGR2024-00011

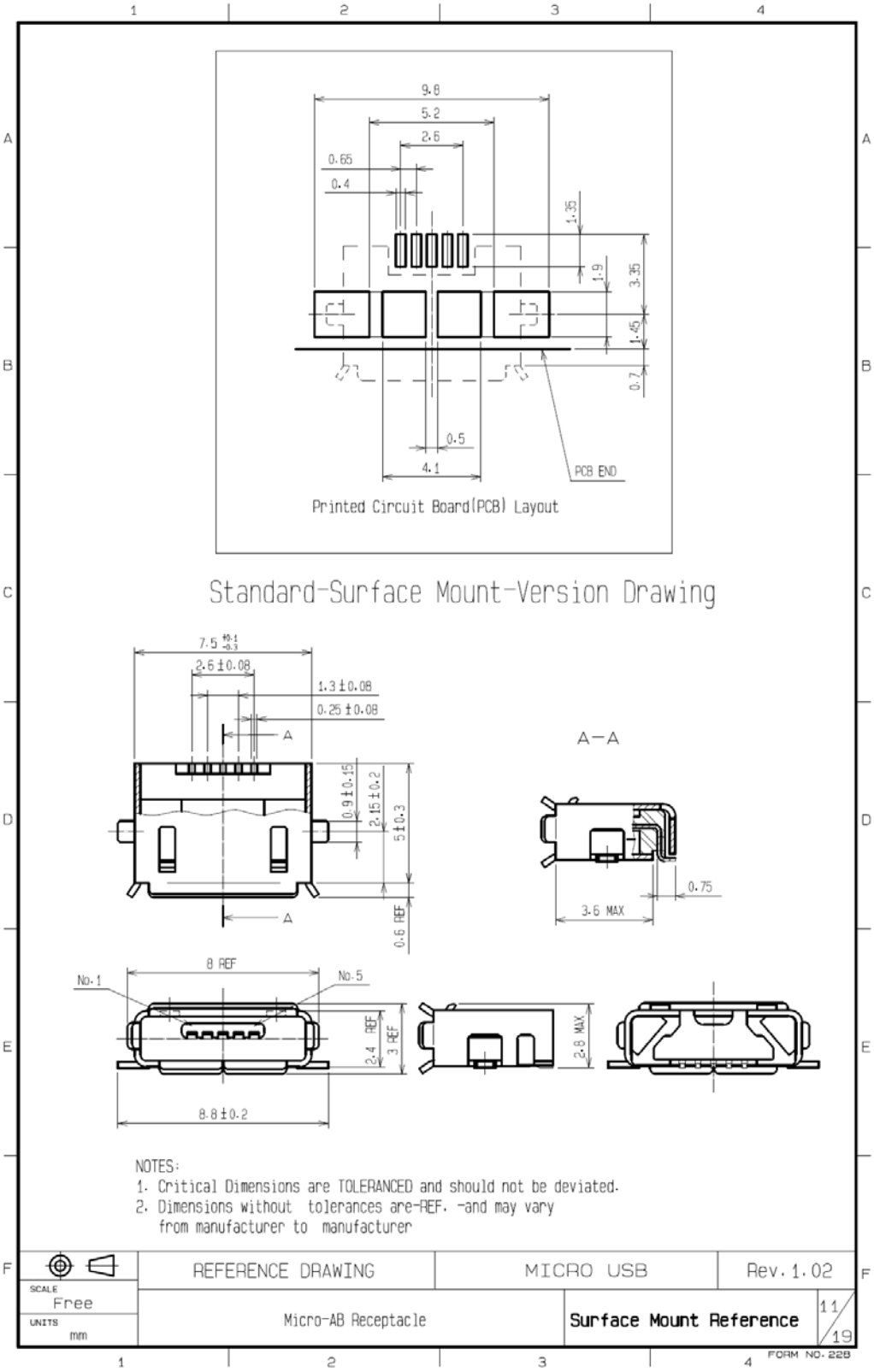

Figure 4-11 Micro-AB Receptacle Design

Microchip Ex. 1070, p. 24
Microchip v. Aptiv
PGR2024-00011

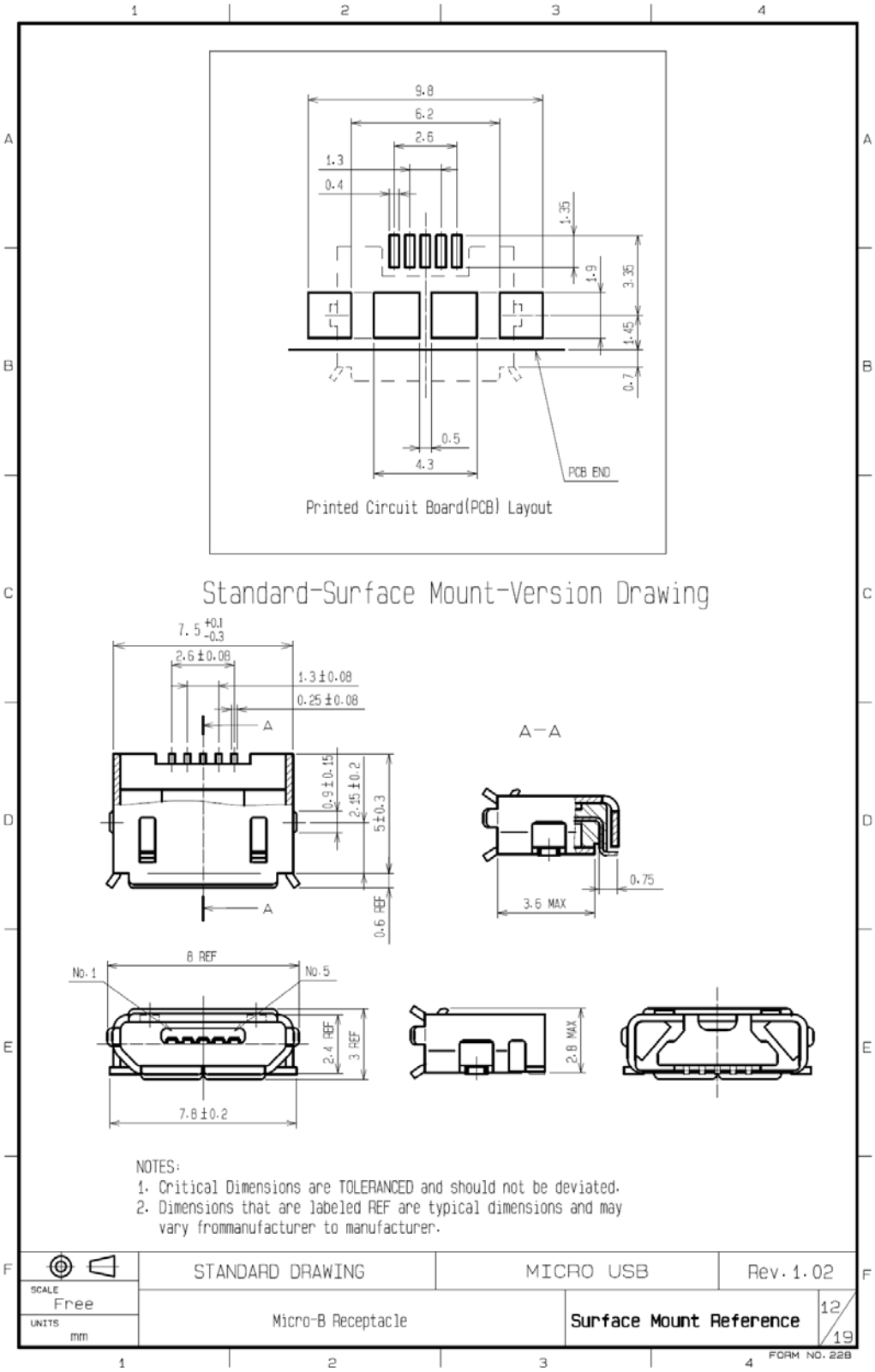

Figure4-12 Micro-B Receptacle Design

Microchip Ex. 1070, p. 25
Microchip v. Aptiv
PGR2024-00011

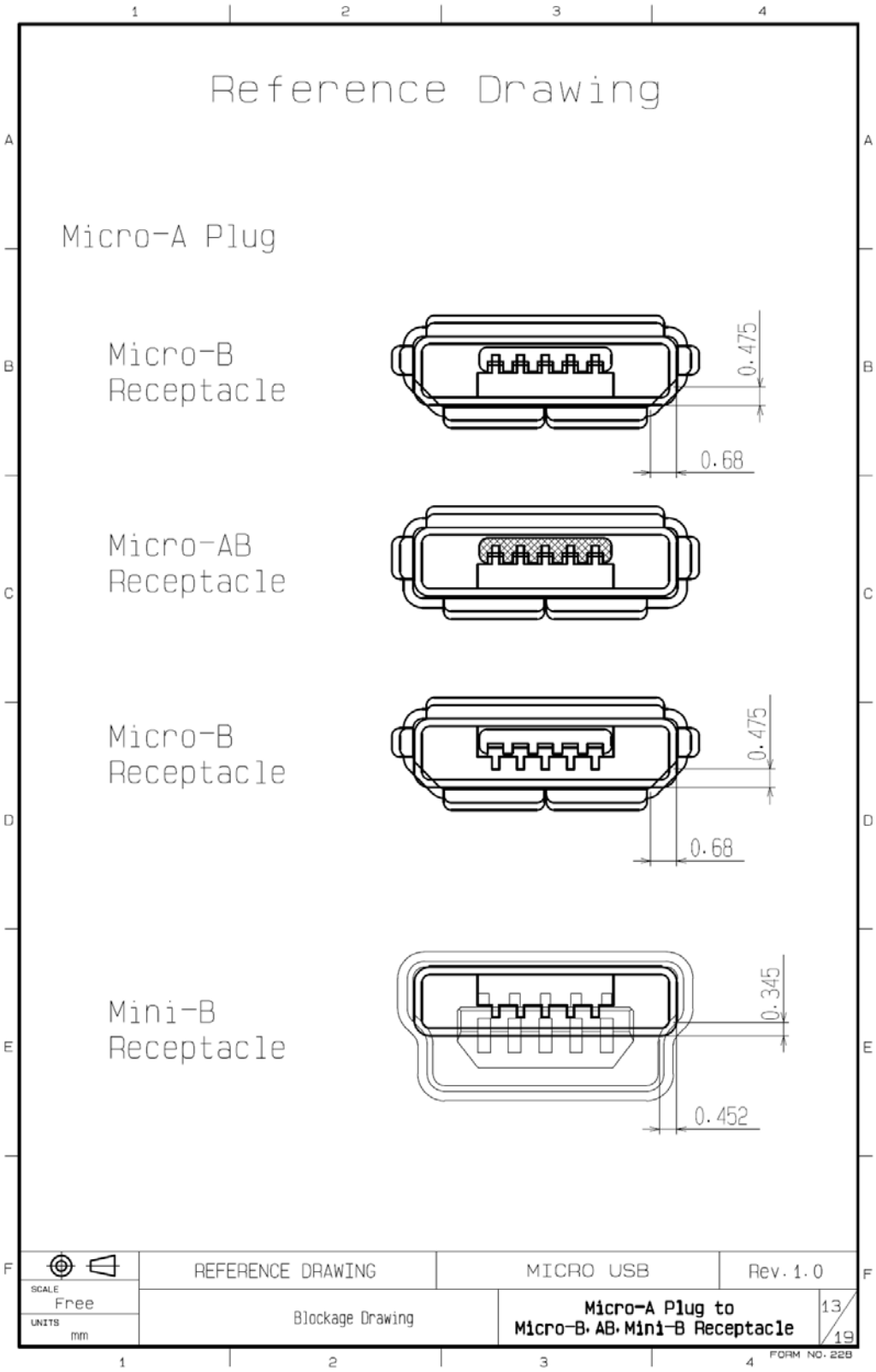

Figure 4-13 Micro-A Plug Blockage

Microchip Ex. 1070, p. 26
Microchip v. Aptiv
PGR2024-00011

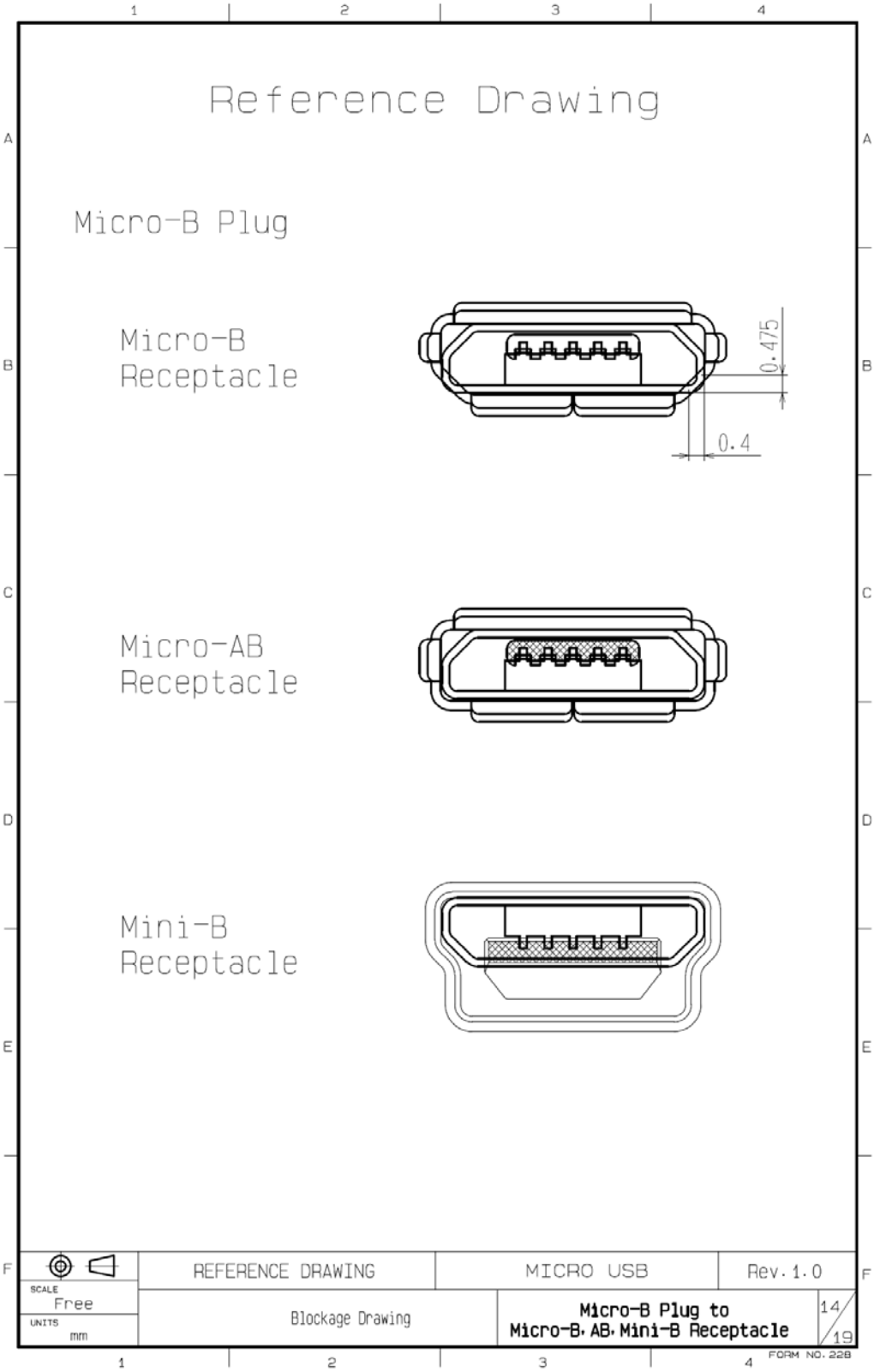

Figure 4-14 Micro-B Plug Blockage

Microchip Ex. 1070, p. 27
Microchip v. Aptiv
PGR2024-00011

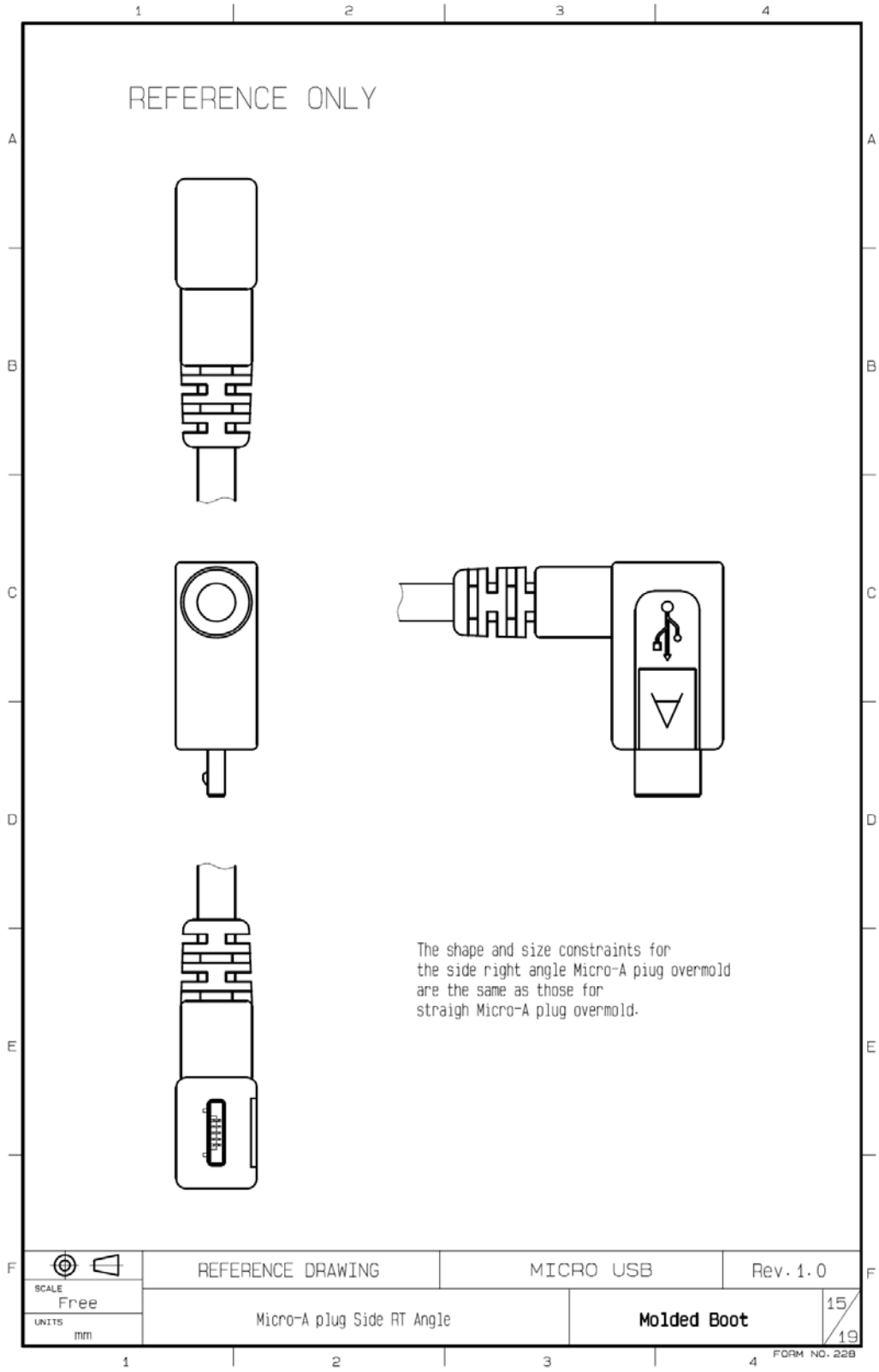

Figure 4-15 Micro-A Plug, Side Right Angle

Microchip Ex. 1070, p. 28
Microchip v. Aptiv
PGR2024-00011

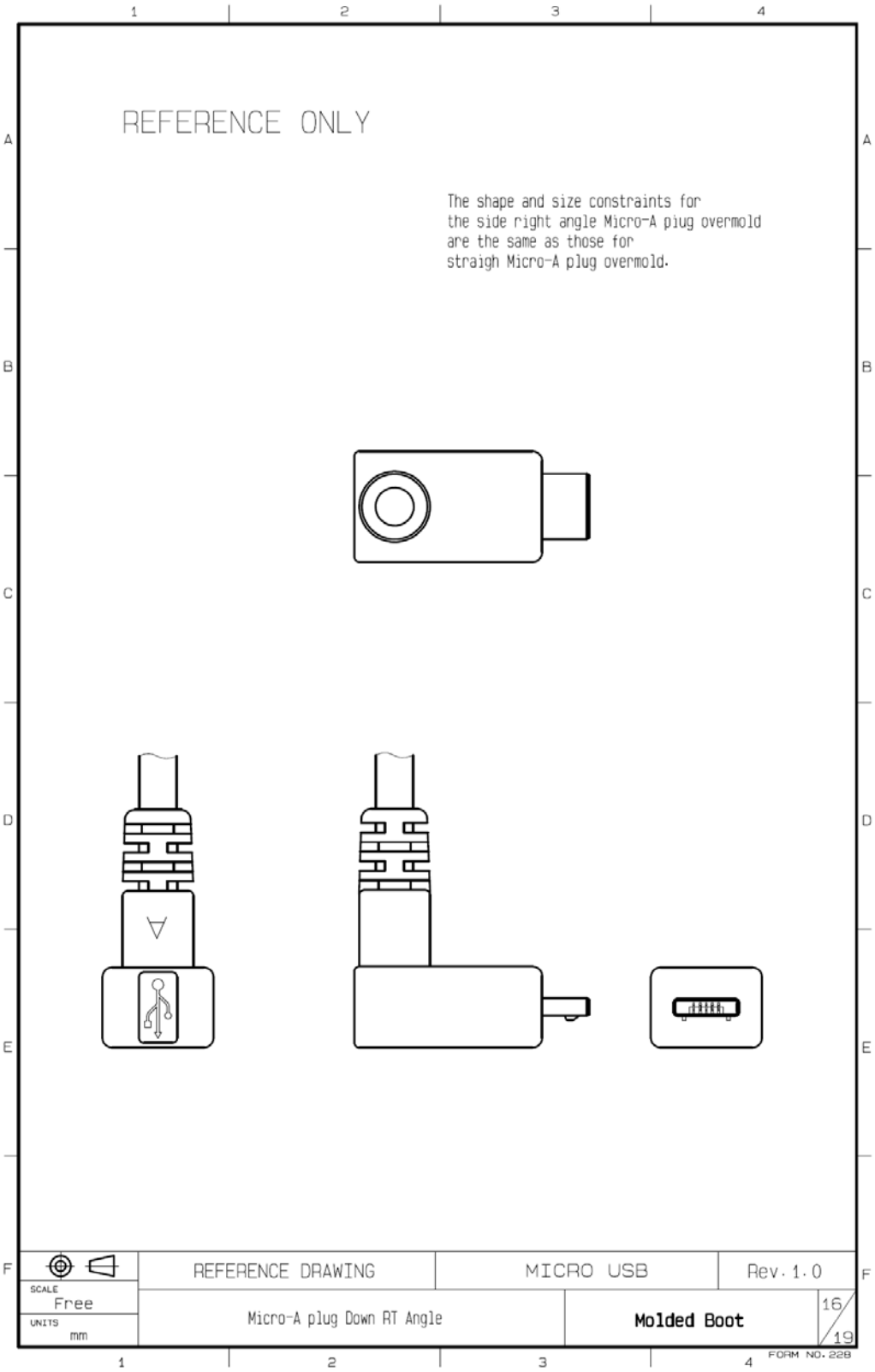

Figure 4-16 Micro-A Plug, Down Right Angle

Microchip Ex. 1070, p. 29
Microchip v. Aptiv
PGR2024-00011

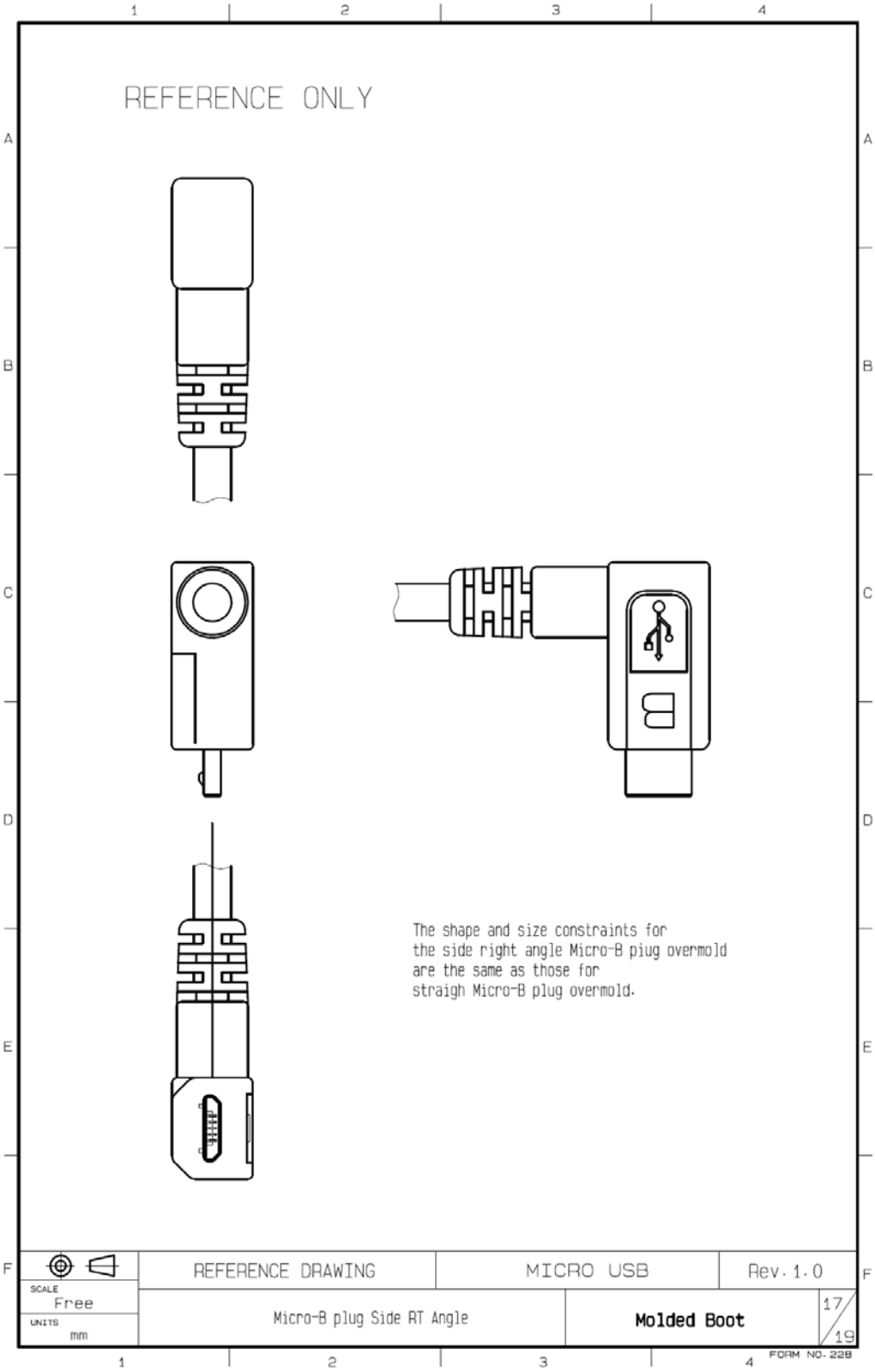

Figure 4-17 Micro-B Plug, Side Right Angle

Microchip Ex. 1070, p. 30
Microchip v. Aptiv
PGR2024-00011

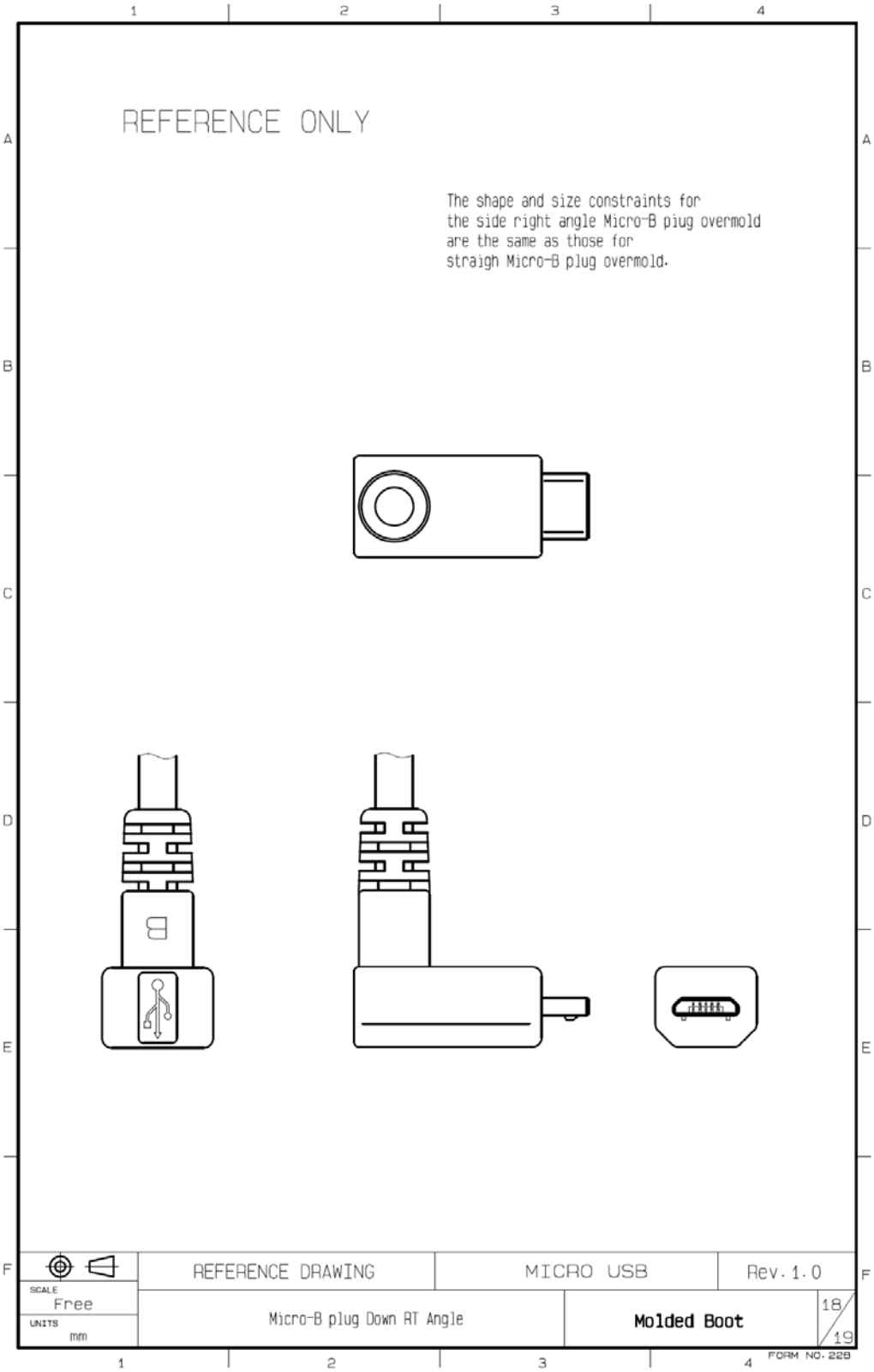

Figure 4-18 Micro-B Plug, Down Right Angle

Microchip Ex. 1070, p. 31
Microchip v. Aptiv
PGR2024-00011

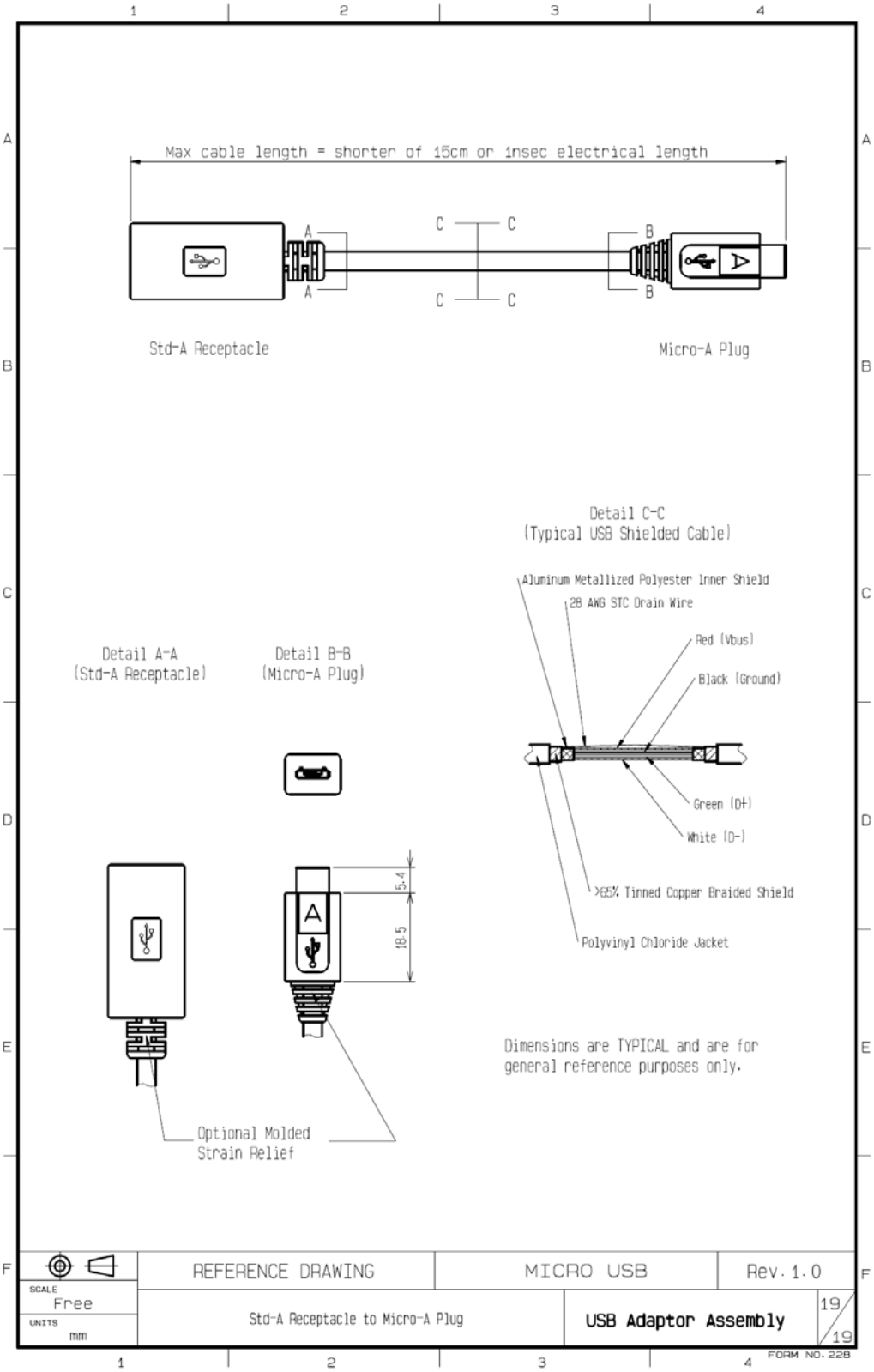

Figure 4-19 Adapter, Standard-A receptacle to Micro-A plug

Microchip Ex. 1070, p. 32
Microchip v. Aptiv
PGR2024-00011

5 Electrical Compliance Requirements

Electrical requirements are unchanged from the USB 2.0 specification (Chapter 6; Table 6-7) and the On-The-Go Supplement to the USB 2.0 Specification, unless otherwise specified here.

5.1 Data Rates Beyond USB 2.0 (480Mb/s -->)

This section will be amended as requirements for higher data rates (beyond the current USB 2.0 specification) become available.

5.2 Low Level Contact Resistance

30mΩ (Max) initial when measured at 20mV (Max) open circuit at 100mA. Maximum change (delta) of +**10 mΩ** after 10,000 insertion/extraction cycles at a maximum rate of 500 cycles per hour. (When manually operated, mating speed should be below 200 cycles per hour.)

5.3 Contact Current Rating

5.3.1 Signal Contacts Only (2, 3, and 4)

1A minimum when measured at an ambient temperature of 25 degrees Celsius. With power applied to the contacts, the delta temperature must not exceed +30degrees Celsius at any point in the USB connector under test.

5.3.2 With Power Applied Contacts (1 and 5)

1.8A for contacts 1 and 5 and at the same time 0.5A for contacts 2, 3 & 4, minimum when measured at an ambient temperature of 25 degrees Celsius. With power applied to the contacts, the delta temperature must not exceed +30degrees Celsius at any point in the USB connector under test.

Microchip Ex. 1070, p. 33
Microchip v. Aptiv
PGR2024-00011

6 Mechanical Compliance Requirements

The following requirements will take precedence over the requirements set forth in the USB 2.0 specification (Chapter 6; Table 6-8) and the On-The-Go Supplement to the USB 2.0 Specification.

6.1 Operating Temperature Range

6.1.1 Option I

-30°C to +80°C

6.1.2 Option II

-30°C to +85°C (and above)

6.2 Insertion Force

Recommendations**:**

- It is recommend to use a non-silicon based lubricant on the latching mechanism to reduce wear. If used the lubricant may not affect any other characteristic of the system.
- 35 Newton's maximum at a maximum rate of 12.5 mm(0.492") per minute.

6.3 Extraction Force

- 8N (MIN) after 10000 insertion/extraction cycles (at a maximum rate of 12.5mm (0.492") per minute).
- No burs or sharp edges are allowed on top of locking latches (hook surfaces which will rub against receptacle shield).
- It is recommend to use a non-silicon based lubricant on the latching mechanism to reduce wear. If used the lubricant may not affect any other characteristic of the system.

6.4 Plating

Recommendations:

- Contact plating should be done after stamping and forming
- Burrs should not be present on contact areas
- Contact area as smooth as possible before plating
- Use a sealing treatment to control plating porosity (contact area)

Microchip Ex. 1070, p. 34
Microchip v. Aptiv
PGR2024-00011

6.4.1 Option I

6.4.1.1 Receptacle

Contact area: (Min) 0.05 µm Au + (Min) 0.75 µm Ni-Pd on top of (Min) 2.0 µm Ni

Contact tail: (Min) 0.05 µm Au on top of (Min) 2.0 µm Ni

6.4.1.2 Plug

Contact area: (Min) 0.05 µm Au + (Min) 0.75 µm Ni-Pd on top of (Min) 2.0 µm Ni

6.4.2 Option II

6.4.2.1 Receptacle

Contact area: (Min) 0.75 µm Au on top of (Min) 2.0 µm Ni

Contact tail: (Min) 0.05 µm Au on top of (Min) 2.0 µm Ni

6.4.2.2 Plug

Contact area: (Min) 0.75 µm Au on top of (Min) 2.0 µm Ni

6.5 Solderability

Solder shall cover a minimum of 95% of the surface being immersed, when soldered at temperature 255℃ +/-5℃ for immersion duration 5S (component is to be lead-free component) using Type R flux.

6.6 Peel Strength (Reference Only)

Minimum 150N when soldered connector is pulled up from PCB in the vertical direction.

6.7 Wrenching Strength (Reference Only)

Perpendicular Force Test : This test shall be performed using virgin parts. Perpendicular forces (Fp) are applied to a plug when inserted at a distance (L) of 15mm from the edge of the receptacle. Testing conditions & method should be agreed with all parties. These forces are to four direction (left, right, up, down). Compliant connectors will meet the following force thresholds with the following results :

- No plug or receptacle damage: 0 - 25N

- The plug can be damaged, but in such a way that the receptacle does not sustain damage: 25 - 50N

6.8 Lead Co-Planarity

Co-planarity of all SMT leads shall be within 0.08mm range.

Microchip Ex. 1070, p. 35
Microchip v. Aptiv
PGR2024-00011

6.9 RoHS Compliance

Component is to be RoHS compliant. Lead Free plug and receptacle materials must conform to Directive 2002/95/EC of January 27, 2003 on Restriction of Hazardous Substances (RoHS).

6.10 Shell & Latch Materials

Shell and latch materials for both plug and receptacle shall be stainless steel or mechanically equivalent material.

Microchip Ex. 1070, p. 36
Microchip v. Aptiv
PGR2024-00011