Delphi/Unwired USB Hub
Apple CarPlay Overview

Nov 10th, 2014

EX.
12
C.A. No.17-1194-JDW

DELPHI

Delphi/Unwired Confidential

Purpose of Document

- Delphi agrees to share the high level functional overview with Apple for the sole purpose of joint exploration and discussion of the system design as it relates to Apple CarPlay implementation in OEM vehicle systems.
- Delphi desires to explore with Apple the system implications of their design to present and future CarPlay requirements.
- Delphi requires Apple to consider this information as Confidential and protected in the same manner as Apple requires their MFi documentation to remain confidential by development partners such as Delphi and Unwired.

Unique Benefits of Delphi/Unwired Hub

- Meets CarPlay Requirements with Zero Impact to Vehicle System Hardware.
  - Minimizes USB cables in vehicle wiring
  - No need for OTG capability in the Headunit
  - Fully compliant to CarPlay specification without modifications to iOS to allow hubs
- All USB Downstream Ports Support CarPlay.
  - Highest user satisfaction. All ports support CarPlay so there is no need to provide special port labels.
  - Headunit application software has control over system behavior at all time (eg what happens if two iphones are plugged in at once)
- Uninterrupted Use of all other Hub Functions/Ports During CarPlay Sessions.
  - User can simultaneously make use of other hub ports while CarPlay is active
  - Optimal user experience

Simplified System Concept

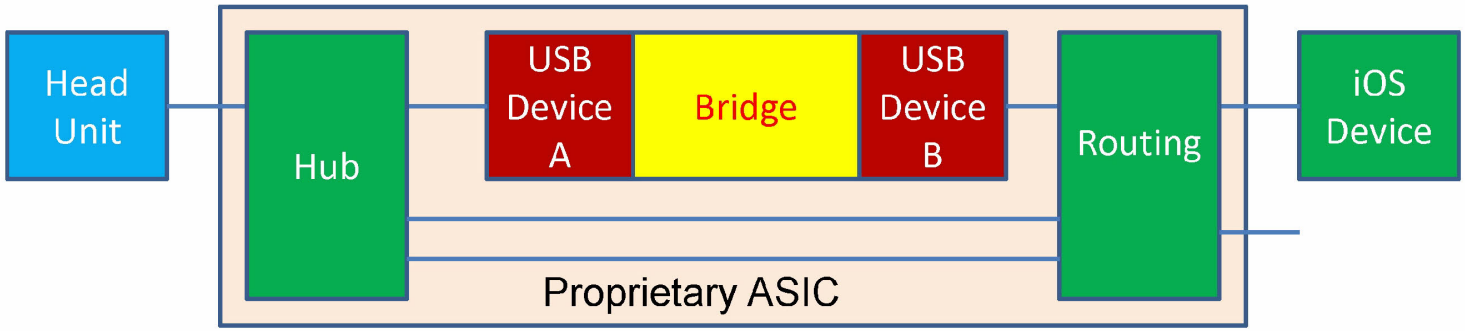

Operational Description :

At power up Head Unit detects a standard USB hub and a custom Bridge device

Head Unit loads a custom driver for the Bridge device supplied by Unwired/Delphi

Bridge driver has ability to control routing of any downstream port to either the Bridge or straight to the hub. Control over routing decisions resides in Head Unit software.

Default USB port routing is direct to the Hub for initial connection.

Upon connection to iPhone as USB device the hub will CDP handshake, the head unit will enumerate the iPhone, request iPhone to role reverse, and command the Hub port to be rerouted to the Bridge. Vbus to phone stays high during this period.

Simplified System Concept

Operational Description Continued :

iPhone now in host mode transfers data to Device B endpoints in the Bridge. Device B appears to the iPhone as if it is the Head Unit.

Bridge logic moves packets received on Device B endpoints to Device A endpoints.

The custom Bridge driver in the head unit will read the data from the endpoints in device A and pass it to Head Unit software.

The system implementation appears to both the iPhone and the head unit software as if the Head Unit and iPhone are directly connected to each other.

Descriptor requests from iPhone are passed to the head unit software for responses. Head Unit retains full control of system at all times.

Bridge hardware has ability to detect and communicate error conditions and iPhone disconnect to the Head Unit.

Bridge Functional Block Diagram

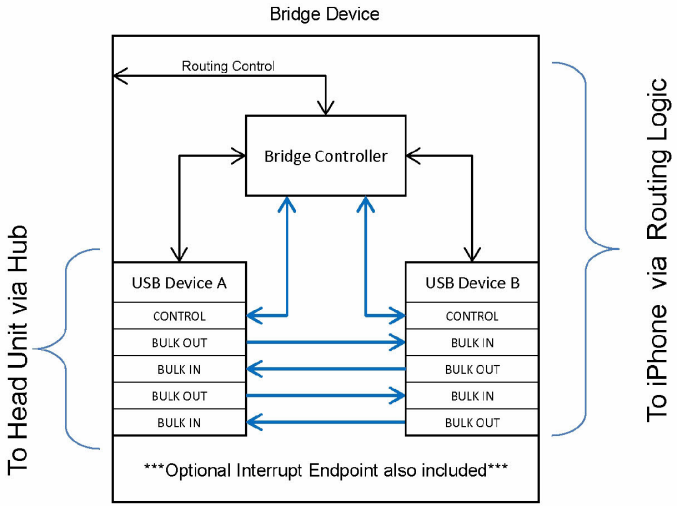

Operational Description:

The USB Device controllers in the Bridge Device are configured to contain all endpoints required by CarPlay.

Bulk pipe data transfers are moved quickly thru the system. iPerf tests show bidirectional data flow of greater than 100 Mbit/s

Control channel requests are passed to the Head Unit for determination of the responses

System Performance Tests

Thruput and latency requirements of CarPlay are met as measured by iPerf test.

CarPlay ATS tests have been run utilizing a mock Head Unit created internally at Unwired. All hardware dependent tests pass. A few failures are logged due to incomplete application level software in the mock Head Unit, unrelated to the Bridge, Hub or Driver.

Mock Head Unit demonstrates the ability for CarPlay sessions to run flawlessly while a second USB port on the hub is streaming video from a USB thumb drive to the headunit.

Head Unit OS can prioritize USB bandwidth for CarPlay over other hub functions.

Development Status

The Custom Hub ASIC is built on the concept Unwired first deployed with JLR NGI.

The ASIC is on it's third revision and has achieved full functionality.

Minor bug clean up in process. Final silicon in December.

First production USB modules using this ASIC will be production launched in 2Q15.

GM, Ford, and Chrysler/Fiat have sourced Unwired/Delphi to use this ASIC in their global corporate approach to supporting CarPlay in systems with Hubs. <u>This equates to over 5 million vehicles produced per year using Unwired/Delphi Hub ASIC with Carplay.</u>

Mulitple Tier 1 Head Unit providers have demonstrated working CarPlay systems to their OEM customers using the Unwired/Delphi reference drivers and hub modules.

Further driver porting ongoing to support new target HeadUnit hardware with QNX and Windows to support future OEM platforms.