UNITED STATES PATENT AND TRADEMARK OFFICE

BEFORE THE PATENT TRIAL AND APPEAL BOARD

MICROCHIP TECHNOLOGY INC.
Petitioner,

v.

APTIV TECHNOLOGIES AG
Patent Owner.

Patent No. 9,619,420

Inter Partes Review No. IPR2024-00495

SUPPLEMENTAL DECLARATION OF HENRY HOUH

I. INTRODUCTION

1. I have been retained by counsel for Aptiv Technologies AG ("Aptiv" or "Patent Owner") in the following matters:

Case No. IPR2024-00228 (Patent No. 9,619,420)
Case No. IPR2024-00229 (Patent No. 9,645,962)
Case No. IPR2024-000230 (Patent No. 11,176,072)
Case No. PGR2024-00011 (Patent No. 11,681,643)
Case No. IPR2024-00495 (Patent No. 9,619,420)

2. I have been asked to opine on the patentability of the challenged claims in U.S. Patents Nos. 9,619,420 (the "'420 Patent"), 9,645,962 (the "'962 Patent"), 11,176,072 (the "'072 Patent"), and 11,681,643 ("the '643 Patent") (collectively the "Challenged Patents").

II. QUALIFICATIONS

3. I am currently employed by Houh Consulting Inc. as an independent technical consultant. I also founded Einstein's Workshop, a company that provides supplemental science, technology, engineering, and mathematics ("STEM") education to children of all ages.

4. My professional career has spanned more than 25 years. I previously provided my CV as Exhibit A to my declaration (EX2001). During these years I

have gained extensive experience in communications systems, networking, distributed systems, protocols, and embedded systems.

5. I earned my Ph.D. degree in Electrical Engineering and Computer Science in February 1998 from the Massachusetts Institute of Technology (MIT). I also received a Master of Science (M.S.) in Electrical Engineering and Computer Science (February 1991), a Bachelor of Science in Electrical Engineering and Computer Science (June 1989) and a Bachelor of Science in Physics (February 1990) from MIT.

6. In 1987, I worked at AT&T Bell Laboratories as part of a five-year dual degree program at MIT. At Bell Labs, I first worked in a group supporting core telephony switching functions, then later I joined the Optical Computing group. In graduate school, I joined the Advanced Network Architecture (ANA) group at the Laboratory for Computer Science (LCS) at MIT, then headed by Prof. David Tennenhouse and senior research scientist David Clark. Dr. Clark is generally considered to be one of the fathers of the Internet Protocol, having acted as chief protocol architect for the development of the Internet. My research and work experience in distributed systems, networking, and network architecture dates back to around 1991 when I joined ANA.

7. Later, when Prof. Tennenhouse formed his own research group, the Telemedia Network Systems (TNS) group, I joined TNS. The TNS group built a

high-speed gigabit network and applications which ran over the network, such as remote video capture, processing, and display on computer terminals. I designed the core networking hardware and software, including the high-speed data links and the device drivers for the network interface cards.

8. TNS's research activities focused on high speed networking and the types of applications that require increased network bandwidth and computing power. One of the applications I investigated was live streaming video, and real-time processing of such video. My work was focused around the transport, switching, and routing of data (including video and audio streams), and the integration of TNS's network into the computing environment, including the protocols, IP/ATM integration, operating system software and device drivers.

9. While I was an undergraduate senior, I became a teaching assistant (normally a role at MIT reserved for graduate students) for a core electrical engineering/computer science course, Computation Structures. Later, as a graduate student, I became head teaching assistant for the course. After graduating, I was invited to guest lecture and work with several MIT courses, including in circuit design and web application development. I also worked with a team of students mentoring them on their web application development project.

10. I defended and submitted my Ph.D. thesis, titled "Designing Networks for Tomorrow's Traffic," in January 1998. As part of my thesis research, I

analyzed local-area and wide-area flows to show a more efficient method for routing packets in a network, based on traffic patterns at the time. My thesis also addressed real-time streamed audio and video.

11. From 1997 to 1999, I was a Senior Scientist and Engineer at NBX Corporation, a start-up that made business telephone systems for streaming packetized audio over data networks instead of using traditional telephone lines. NBX was later acquired by 3Com Corporation, and the phone system I worked on at NBX was widely used by numerous businesses. As part of my work at NBX, I designed the core audio reconstruction algorithms for the telephones, as well as the packet transmission algorithms. I also designed and validated the core packet transport protocol used by the phone system. The NBX system also supported TAPI, the Telephony Application Programming Interface, thus allowing other computer programs to integrate with our system telephony features.

12. From 1999-2004, I was employed by Empirix or its predecessor company, Teradyne. Empirix was a leader in test tools for telecommunications protocols and systems, providing functional testing tools as well as load testing tools. From 2000-2001, I conceived and built a test platform for testing Voice-over-IP (VoIP). The first application on this new test platform was a cloud emulator for simulating the effects of transmitting VoIP over a busy network.

13. I worked at BBN Technologies from 2004 to 2009. BBN Technologies, formerly known as Bolt, Beranek and Newman, was a pioneer of the Internet and a long-established leader in speech recognition and natural language processing. BBN received the first contract to build components of a packet switched network as part of the ARPANET, a U.S. Department of Defense effort funded through the Advanced Projects Research Agency (ARPA). While this effort preceded my time at BBN by many years, BBN continued to maintain a strong presence in network research and development, including in wireless networking, device discovery, and protocols for a "body area network."

14. In 2012, I founded Einstein's Workshop, a science, technology, engineering, and math enrichment program for kids of all ages. The Workshop teaches programming, robotics, "making" (akin to creating, building, and tinkering), engineering, 3D CAD, mobile application development and many other subjects. Einstein's Workshop teaches a variety of programming classes from Scratch to Java. We also teach game development for mobile devices, for which I evaluated a number of mobile application programming environments. I also developed a robotics programming class in which robots could be programmed to be autonomous or under direct wireless control.

15. Einstein's Workshop also created and developed BlocksCAD, a 3D CAD system for kids and adults. BlocksCAD is used world-wide and has more

than 110,000 registered users and 350,000 total users. BlocksCAD is being used in maker spaces worldwide and is integrated into school curriculum in various school systems in the U.S. at elementary, middle and high school levels. BlocksCAD was spun out into a separate company that was part of the LearnLaunch business accelerator program for educational technologies, MIT Playlabs 2018 and the 2018 MassChallenge Boston Cohort. BlocksCAD also received Phase 1 SBIR funding.

16. I have been awarded several United States patents, and I have several patent applications pending, including U.S. Patent No. 6,967,963, which originated in the work I did at NBX, and is titled "Telecommunication method for ensuring on-time delivery of packets containing time-sensitive data." A full list of my U.S. Patents, European Patents and Patent Publications is included in my attached C.V.

17. Additional details of my work experience, awards and honors, and publications that may be relevant to the opinions I am expressing are set forth in my C.V. attached as Exhibit A to the end of my declaration.

III. COMPENSATION

18. I am being compensated for my time at my standard consulting rate of $820/hr. I am also being reimbursed for expenses that I incur during my work. My compensation does not depend on the substance of my opinions or the outcome of any proceeding involving the Challenged Patents. I have no financial interest in the outcome of this matter or in any litigation involving the Challenged Patents.

IV. MATERIALS CONSIDERED

19. I considered the following materials, amongst other things, in preparing this declaration.

Exhibit No.	Description
1001	U.S. Patent No. 9,460,037 ("'037 Patent")
1002	Patent Prosecution History for U.S. Patent No. 9,460,037
1003	U.S. Patent No. 9,619,420 ("'420 Patent")
1004	Patent Prosecution History for U.S. Patent No. 9,619,420
1005	U.S. Patent No. 9,645,962 ("'962 Patent")
1006	Patent Prosecution History for U.S. Patent No. 9,645,962
1007	U.S. Patent No. 10,545,899 ("'899 Patent")
1008	Patent Prosecution History for U.S. Patent No. 10,545,899
1009	U.S. Patent No. 11,176,072 ("'072 Patent")
1010	Patent Prosecution History for U.S. Patent No. 11,176,072
1011	U.S. Patent No. 11,681,643 ("'643 Patent")
1012	Patent Prosecution History for U.S. Patent No. 11,681,643
1013	Declaration of Eric Welch
1014	U.S. Patent Publication No. 2006/0206650 ("Chang")
1015	U.S. Patent Publication No. 2009/0268743 ("Chang II")
1016	U.S. Patent Publication No. 2004/0019732 ("Overtoom")
1017	U.S. Patent Publication No. 2006/0195625 ("Hesse")
1018	*Universal Serial Bus Specification,* Revision 2.0, April 27, 2000 ("USB 2.0 Specification")
1022	*On-The-Go and Embedded Host Supplement to the USB Revision 2.0 Specification,* Revision 2.0 version 1.1a, July 27, 2012 (the "OTG Supplement")
1029	U.S. Patent No. 8,447,598 ("Chutorash")
1060	Fairchild Semiconductor FSUSB63 3:1 High-Speed USB 2.0 Switch / Multiplexer, dated November, 2010
1063	Maxim 4989 Datasheet (USB 2.0 Hi-Speed 2-of-4 Crosspoint Switch), dated August 2008
1064	Cypress Semiconductor AN96527 – Designing USB Type-C Products Using Cypress's CCG1 Controllers, dated June 3, 2015
1068	Fairchild Semiconductor FSUSB30 Low-power, Two-Port, High-Speed USB2.0 Switch, dated January 2007
1069	The ART of Electronics, P Horowitz and W. Hill, Cambridge

	University Press, 2nd Edition (1989)
1071	Fairchild Semiconductor FSA880 / FSA881 – USB Port 2:1 Switch with Accessory and Charger Detection, dated November 2011
1075	Joint Claim Construction Statement (Dkt. No. 115), dated December 6, 2023 in Aptiv Technologies AG, v Microchip Technology Inc., Case No. 1:23-cv-00307-JDW (D. Del.)
2002	Trial Transcript Excerpts, *Microchip Tech. Inc. v. Aptiv Servs. US, LLC*, No. 17-cv-1194 (D. Del. Apr. 6-13, 2022) – Testimony of Mitch Obolsky
2003	Trial Transcript Excerpts, *Microchip Tech. Inc. v. Aptiv Servs. US, LLC*, No. 17-cv-1194 (D. Del. Apr. 6-13, 2022) – Testimony of Robert Voto
2004	Complaint, *Aptiv Technologies Ltd. v. Microchip Technology, Inc.*, No. 23-cv-307-JDW (DED).
2005	Trial Exhibit No. 58 – Jun. 18, 2014 Mark Orlosky and Brigham Steele Email Chain re: CarPlay and forced DCP to external ports
2006	Trial Exhibit No. 62 – Oct. 1, 2014 Stefan Saenger, Chris Behal, and Ray Kamps Email Chain re: CarPlay - Fiat
2007	Trial Exhibit No. 66 – Nov. 26-Dec. 1, 2014 David Sroka, Eric Kawamoto, and Sal Canu Email Chain re: Media Hub Interim Update
2008	Trial Exhibit No. 246 – Jul. 20, 2014 Don Perkins Email re: UNG Detroit Sales Meeting and Training July 15 – 18
2009	Trial Exhibit No. 252 – Aug. 11, 2014 David Sroka, Don Perkins, Sal Canu Email Chain re: CarPlay compliance Strategy
2010	Trial Exhibit No. 262 – Dec. 2, 2014 Sal Canu Email re: Microchip Position for the Thursday Chrysler Meeting
2016	Robert Dezmelyk Declaration in Support of Microchip's Responsive Claim Construction Brief, *Aptiv Technologies AG v. Microchip Technology Inc.*, No. 23-cv-307-JDW (DED)
2017	Trial Transcript Excerpts, *Microchip Tech. Inc. v. Aptiv Servs. US, LLC*, No. 17-cv-1194 (D. Del. Apr. 6-13, 2022) – Testimony of Michael Dreon
2018	Redacted Version of Jury Verdict Form, *Microchip Tech. Inc. v. Aptiv Servs. US, LLC*, No. 17-cv-1194 (D. Del.), D.I. 357
2020	Corrected Joint Claim Construction Brief, *Aptiv Techs. AG. v. Microchip Tech. Inc.,* No. 1:23-cv-00307 (D. Del)
2021	Deposition Transcript of Eric Welch (Oct. 10, 2024)

2022	Trial Exhibit No. 5 – Oct. 23, 2013 Presentation Entitled "Digital iPod Out OTG Solution Dual Role USB HUB"
2023	Trial Exhibit No. 6 – Boston USB Hub with SD Card Port ASIC, Product Specification
2024	Trial Exhibit No. 7 – Functional Diagram of Boston 2 Chip
2025	Trial Exhibit No. 12 – Nov. 10, 2014 Presentation Entitled "Delphi/Unwired USB Hub Apple CarPlay Overview
2026	Trial Exhibit No. 25 – Product Business Plan for Sandia
2027	Trial Exhibit No. 124 – Jun. 9, 2017 Presentation Entitled "Delphi Data Connectivity"
2028	Trial Exhibit No. 143 – Oct. 7, 2015 Presentation Entitled "Delphi Data Connectivity"
2029	Trial Exhibit No. 192 – Jan. 2013 Presentation re: Apple Digital iPod Out Support
2030	Trial Exhibit No. 236 – USB4916 Product Specification
2031	Trial Exhibit No. 248 – Jul. 23, 2014 David Sroka, Brigham Steele, Andrew Rogers, Don Perkins Email Chain re: Debunking Unwired
2032	Trial Exhibit No. 268 – Jan. 5, 2015 David Sroka, Santosh Shetty, Mark Bohm Email Chain re: USB Multi Host Bridge Questions
2033	Trial Exhibit No. 273 – Jan. 12, 2015 Davis Sroka, Mike Pennell, Mark Bohm, Eric Kawamoto Email Chain re: Sparta and Tecvox
2034	Trial Exhibit No. 275 – Jan 26, 2016 Mitchel Obolsky, Steve Sanghi, Ganesh Moorthy Email Chain re: Initial Proposal for Tecvox (Chrysler and Fiat, too) with Attachment
2035	Trial Exhibit No. 287 – Jan. 21, 2016 Mark Bohm, Mitchel Obolsky Email Chain re: Analysis of Unwired Media Connectivity Module
2036	Declaration of Michael Dreon
2037	Dreon Decl. Ex. A – Trial Exhibit No. 18 – Jan. 27, 2016 Presentation Entitled "PACE Award Finalist Dual Role Hub"
2038	Dreon Decl. Ex. B – PACE Award Judge's Citation
2039	Dreon Decl. Ex. C – PACE Award Video Transcript
2040	Trial Transcript (Vol. 2)
2041	Trial Transcript (Vol. 3)
2042	Trial Transcript (Vol. 4)

V. UNDERSTANDING OF THE LAW

20. I am not a lawyer, and I will not provide any legal opinions. Rather, I have been asked to provide my technical opinions based on (1) how a person of ordinary skill in the art would have understood various references before the priority dates of the Challenged Patents and (2) how a person of ordinary skill in the art would understand disputed claims in the '420 Patent. Although I am not a lawyer, I have been advised to apply certain legal standards in forming my opinions.

A. Claim Construction

21. I have been informed that claims should be construed using the same standard as in district court. As such, claim terms generally receive their plain and ordinary meaning, *i.e.*, how a person of ordinary skill in the art would have understood the term at the time of the claimed invention.

22. I understand that in this proceeding, the Board has construed "connecting the consumer device via the second USB port to the USB ***hub*** via the first USB port" in claim 13 as "connecting the consumer device via the second USB port to the USB ***host*** via the first USB port". (DI (Paper 13), 14-15.) I understand further that in this proceeding, the Board declined to construe claims 18 and 19, and determined that no additional claim terms require express construction. (DI, 15.) I have applied the Board's claim construction ruling in my analysis.

B. Obviousness

23. I understand that a patent claim is unpatentable if it is obvious in view of the prior art. I further understand that obviousness must be considered from the perspective of a person of ordinary skill in the art at the time the claimed invention was made.

24. I have been informed that a patent claim is unpatentable if it would have been obvious to a person of ordinary skill in the art. In analyzing the obviousness of a claim, I understand the following factors may be taken into account: (1) the scope and content of the prior art; (2) the differences between the prior art and the claims; (3) the level of ordinary skill in the art; and (4) any so called "secondary considerations" of non-obviousness if they are present.

25. I have been informed that, in considering obviousness, one must not use hindsight reasoning derived from the patent-at-issue. Rather, references can only be combined if there would have been a motivation to combine them at the time of the invention and a person of ordinary skill in the art would have had a reasonable expectation of success in the combination.

C. Indefiniteness

26. I understand that a patent's claims are indefinite only if the claims, read in light of the specification delineating the patent and the prosecution history,

fail to inform, with reasonable certainty, those skilled in the art about the scope of the invention.

D. Level of Skill in the Art

27. In my opinion, a person of ordinary skill in the art in the field of the Challenged Patents, as of the date of invention (September 26, 2013) ("POSITA"), would have had a bachelor's degree in computer science, electrical engineering, or an equivalent, and two years of professional experience working with computer network protocols such as USB. Lack of work experience can be remedied by additional education, and vice versa.

28. I understand that for the claims of the '420 patent, a priority date of September 26, 2013 should apply.

29. I understand that the Petitioner contends that a heightened level of ordinary skill applies, including that the POSITA would have been well-versed in USB standards (including the USB 2.0 and 3.0 Specifications, the OTG Supplement, and the USB Power Delivery Specifications) and the design/deployment of USB hosts, USB devices, and USB hubs, including suitable environments for USB systems; and that the POSITA would also have had a working understanding of network/communication architectures (e.g., master/slave) and components (e.g., host-to-host bridges), computer hardware and peripherals, computer programming, and the design/implementation of

communication software/firmware/drivers in standard operating systems (e.g., Windows and Linux) and embedded systems. In my opinion, the Petition's proposed level of ordinary skill does not reflect the true ordinary level of skill applicable to the challenged patents. Specifically, it is my view that the level of ordinary skill would not include the specific documents and technologies identified above.

30. My opinions regarding the level of ordinary skill in the art are based on, among other things, my industry experience hiring and managing technical personnel in the computer networking field, and my understanding of the basic qualifications that would be relevant to an individual tasked with investigating methods and systems in the relevant area, and my familiarity with the backgrounds of colleagues, both past and present.

31. My education and my level of experience in electrical engineering exceeds that necessary for a person of ordinary skill in the art. My opinions on the Challenged Patents and the asserted prior art are from the perspective of a POSITA.

VI. THE STATE OF THE ART

A. Universal Serial Bus

32. Based on my review of the Challenged Patents, the patented technology relates generally to a novel way of allowing devices to communicate using the Universal Serial Bus (USB) protocol.

33. USB is a common data networking and computing device connectivity standard designed to allow a variety of devices to connect and communicate with one another using a standardized communication and power interface. Prior to the introduction of USB in the mid-1990s, there were a wide array of different interfaces for connecting various peripheral devices to personal computers. USB was conceived of as a way to reduce the number of different ports and cables required by consumers.

34. The first USB specification (version 1.0) was released in January 1996. The USB 2.0 specification was released in April 2000, and the USB 3.0 specification was released in November 2008. The core principles of USB I discuss here have remained consistent across each of these specifications.

35. USB is a serial bus standard. In computing, the term "bus" is used to refer to systems for transferring data between computing components, whether inside of a computer or between a computer and external components. A "serial" bus is one in which data is sent along a single pathway, with one bit following

another. This is in contrast with a "parallel" bus in which the bits comprising a single data transmission may be sent simultaneously along parallel communication lines.

36. In order to manage the data traffic on its serial bus, USB employs a strict, top-down topology. This means that the network has a single USB "host" which communicates with various USB "devices." The protocol requires that it is the host that must initiate all communication. While a USB host may request data from a USB device, USB Devices cannot initiate communication with the host and are limited to responding to a host's command. Because a host issues commands, it is not configured to receive them.

37. An example of a very simple USB system is provided below:

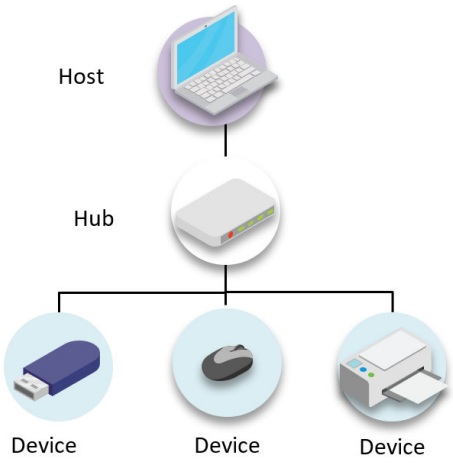

In this scenario, the computer serves as the USB host, while the thumb drive, mouse, and printer act as USB devices.

38. The direction of data flow in a USB network is described relative to the USB host. "Upstream" means the direction of data flow towards the host. "Downstream" means the direction of data flow away from the host. In our example, the PC would be described as upstream of the mouse and printer. Conversely, one could refer to the mouse and printer as downstream devices.

39. The components of a USB network connect via physical connection interfaces called ports. While these connections can be direct, it is common to employ an intermediate device called a hub. A hub is a device that routes multiple downstream ports to a single upstream port. Using a hub allows the host to have more downstream ports where devices can connect. Because multiple downstream ports are routed to a single upstream port, the hub also reduces the amount of wiring required as compared to a USB network using only direct connections. In our example, a hub could be used to allow a PC with only two built-in USB ports to have many downstream ports. Thus, the PC could simultaneously connect to a mouse, keyboard, printer, web camera, etc.

B. Issues with Certain Implementations

40. USB is used in many applications, including the automotive sector. By the early 2010's, it was common for automotive companies to use USB for interfacing devices within a vehicle. Typically, the car's computer or "head unit" would be configured as a USB host. The head unit could then communicate with

(1) non-removable parts of the vehicle, such as speakers, displays, or SD card readers (used for uploading maps) and (2) consumer devices, including memory sticks, tablets, and, of course, smart phones.

41. Smart phones changed the dynamics of USB communication. In traditional USB networks, a PC was commonly configured as a host with accessories acting as devices. But as smart phone technology advanced, smart phones became capable of acting as a USB host and supporting their own accessories. Thus, depending on the configuration, smart phones could act as either a USB device or a USB host.

42. Around 2013, Apple informed automakers of its plans to release a new technology known as CarPlay which was designed to create a seamless user experience in compatible vehicles. (EX2003, 49:17-53:9.) Specifically, when an iPhone connected to a vehicle's infotainment system, the iPhone applications would be displayed on the infotainment system's screen. Apple provided automakers with the technical requirements to make their vehicles compatible, described in an Accessory Interface Specification. To ensure the requirements were met, Apple implemented a certification process wherein only approved systems would be allowed to implement CarPlay. (EX2017, 199:21-200:8.)

43. Apple's specifications were not easy to implement. A particularly difficult constraint was that Apple required the iPhone to act as the USB host

during CarPlay. This proved problematic as existing vehicle infotainment systems were designed for an embedded host in the head unit to serve as the USB host and to control a variety of USB devices, such as the screen, speakers, and any external storage components (e.g., SD cards, CD players, etc). As discussed above, the USB specification only contemplates a single host in any USB network. In fact, in a standard USB network, two hosts cannot communicate since they are only configured to give commands, not receive them. Thus, existing designs could not implement CarPlay while also maintaining connectivity between the head unit and the vehicle's other USB devices such as speakers, displays, SD card readers, etc.

44. At the time of the invention, there were two imperfect approaches to implementing CarPlay (or other features requiring host-to-host communications in a USB system).

45. The first approach was to include a dedicated USB port for host-to-host communications. This solution was known as "dual lane" because the host-to-host communications and host-to-device communications were kept separate. But because the solution required dedicated host-to-host ports, it required consumers to connect their device to a different port depending on whether it was operating in host or device mode. Furthermore, the solution required additional wiring (compared to a hub-compatible network) and increased the cost and complexity of the USB system, something that most automakers were unwilling to accept.

46. The second approach was to effectively invert the USB communication network by swapping the existing host and device roles when a user connected a CarPlay-enabled iPhone. (EX1003, 3:18-21.) For example, when CarPlay was initiated, the iPhone would become the host and the head unit would become a device. This role-swapping could be accomplished via specialized "On-the-Go" ("OTG") ports which allowed compatible devices to negotiate a role reversal. (EX1003, 3:21-24.) Similarly, Microchip's proprietary "FlexConnect" feature dynamically changed a physical port from an upstream port to a downstream port, allowing the connected devices to change roles. (*Id*., 3:46-49.)

47. While role-reversal systems allowed the smart phone to act as a host, they contained a fundamental flaw. By inverting the topology of the USB network, the head-unit was forced to act as a device, not a host. (EX1003, 3:56-60.) As such, it could no longer support connections with the other downstream devices in the vehicle while CarPlay was in use. As a practical matter, this meant activating CarPlay might disrupt built-in functionality like navigation and audio playback. (EX1003, 3:60-3:64.) Thus, OTG and FlexConnect could not facilitate both host-to-host communication (e.g., CarPlay) and persistent downstream USB throughout the vehicle. (EX1003, 3:56-60.)

VII. THE CLAIMED INVENTIONS

48. In response to Apple's requirement that the iPhone act as a USB host during the use of CarPlay, Aptiv created an innovative solution that would allow both the iPhone and the head unit to act as a USB host. At its most basic, this involved the use of a "bridge" structure that would allow two separate hosts to send data back and forth. The car's head unit would then receive firmware that would allow its embedded host to respond to requests from and send data to the iPhone host.

49. The Challenged Patents claim systems, devices, and methods for providing host-to-host and host-to-device communications through a hub. (*E.g.*, EX1003, Abstract.) To accomplish this, the inventors modified a traditional USB hub module to work with a USB bridge, allowing host-to-host and host-to-device communications without interrupting normal hub functionality. In operation, when a consumer device operating in host mode is connected to a downstream port, the USB signal is routed to the vehicle's embedded USB host through the USB bridge, rendering the two hosts compatible. (*E.g.*, EX1003, Claim 1, 4:27-4:33.) But when a consumer device operating in device mode is connected, the USB signal is instead routed directly to the vehicle's embedded host, thereby bypassing the bridge. (*E.g.*, EX1003, 4:25-27.) Thus, the ports are "dual-role" such that the device can be connected regardless of its USB mode, or even handle the same

device changing modes. (*E.g.*, EX1003, 4:20-4:22.) The alternative paths for data transmission are shown below in an annotated version of Figure 4.

Figure 4

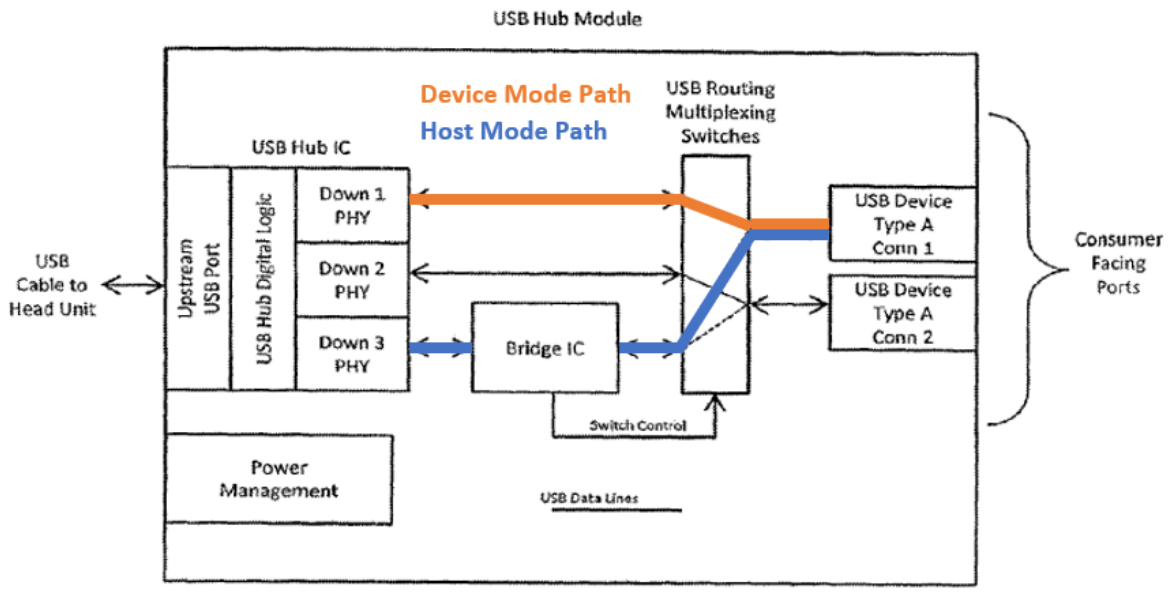

(*E.g.*, EX1003, Figure 4 (annotated).)

50. Unlike dual lane, the invention can be implemented with a single upstream line and allows consumer devices operating in either mode to connect to the vehicle using any port. Moreover, this design does not force the infotainment system to act as a device; instead, it continues to act as a host throughout its operation, allowing for persistent communication with downstream devices. (*E.g.*, EX1003, 8:59-9:4.) Notably, the invention also does *not* require OTG ports or

adapters; it instead takes an entirely different approach to solving the problem. (*See e.g.*, EX1003, 1:21-24.)

51. Below, I provide more detail on the Challenged Patents:

- **'420 Patent -** The '420 Patent is generally directed to devices, systems, and methods for facilitating host-to-host and host-to-device communications through a USB hub. (EX1003, Abstract.) The '420 Patent contains claims directed to a USB hub module (claims 1-6), an integrated circuit (claims 7-12), a method of operating a USB hub module (claims 13-14), a USB connectivity module (claims 15-17), and a communication system (claims 18-20).
- **'643 Patent -** The '643 Patent is generally directed to methods for facilitating host-to-host and host-to-device communications through a USB hub. (EX1011, Abstract.) Claims 1-15 are directed to methods.
- **'962 Patent -** The '962 Patent is generally directed to devices for facilitating host-to-host and host-to-device communications through a USB hub. (Ex. 1005, Abstract.) The '962 Patent contains claims directed to a USB hub module (claims 1-13) and an integrated circuit (claims 14-19). Dependent claims further describe implementing this functionality while also providing power to the connected device. (EX1005.)

- **’072 Patent -** The ’072 Patent is generally directed to a method for facilitating host-to-host and host-to-device communications through a USB hub. (EX1009, Abstract.) Its single claim recites a method wherein an embedded USB host is connected to the USB hub.

VIII. THE ASSERTED PRIOR ART

52. I understand that Petitioner contends that the Challenged Patents are obvious over various combinations of the following prior art. In addition to the summaries provided by Petitioner’s expert, the following teachings (or lack thereof) are notable.

A. Chang

53. Chang is an abandoned U.S. patent application that discloses a USB hub for implementing host-to-host USB transmission through a dedicated host port connected to a bridge. (EX1014, Abstract, [0020].) Chang’s hub addresses the express goal of “easily establishing a connection between a computer and another computer.” (EX1014, [0003].) In Chang’s hub, a USB host device (such as a computer) can connect to a dedicated host port (50), and communicate via a bridge (52) and hub control unit (46) to another USB host device—such as a second computer—connected to an uplink port (42). (EX1014, [0020].) FIG. 3 illustrates:

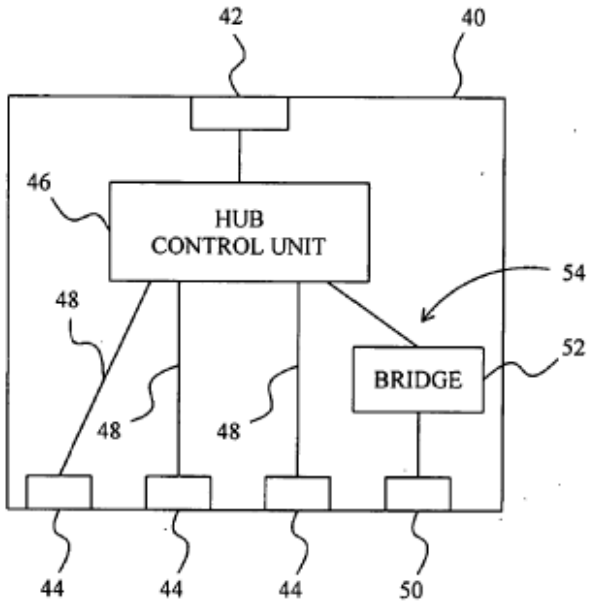

FIG. 3

(EX1014, FIG. 3.)

54. The Chang hub also comprises a number of downlink ports (44) for linking devices connected to the downlink ports to the uplink port. (EX1014, [0019].) The downlink ports allow for host-to-device transmission between USB devices (in a device mode) connected to the downlink ports and a host device connected to the uplink port. (EX1014, [0019].)

B. Chang II

55. Chang II[1] s an abandoned U.S. patent application that discloses a data transmission bridge device. (EX1015, Abstract.) The Chang II bridge device (1) has a first connection interface (11) and a second connection interface (12) connected by a control chip (13) in communication with a memory unit (14). (EX1015, [0023].) The bridge device permits data transmission between a first USB host device (2) connected to the first connection interface, and a second USB device connected to the second connection interface; the second USB device may be a device in a host mode (3) or a slave mode (4) (elsewhere referred to as a device mode). (EX1015, [0021]-[0022].) FIG. 1 illustrates:

[1] Chang and Chang II have different inventors, Ming-Te Chang and Chi-Tung Chang, respectively. (EX1014; EX1015.)

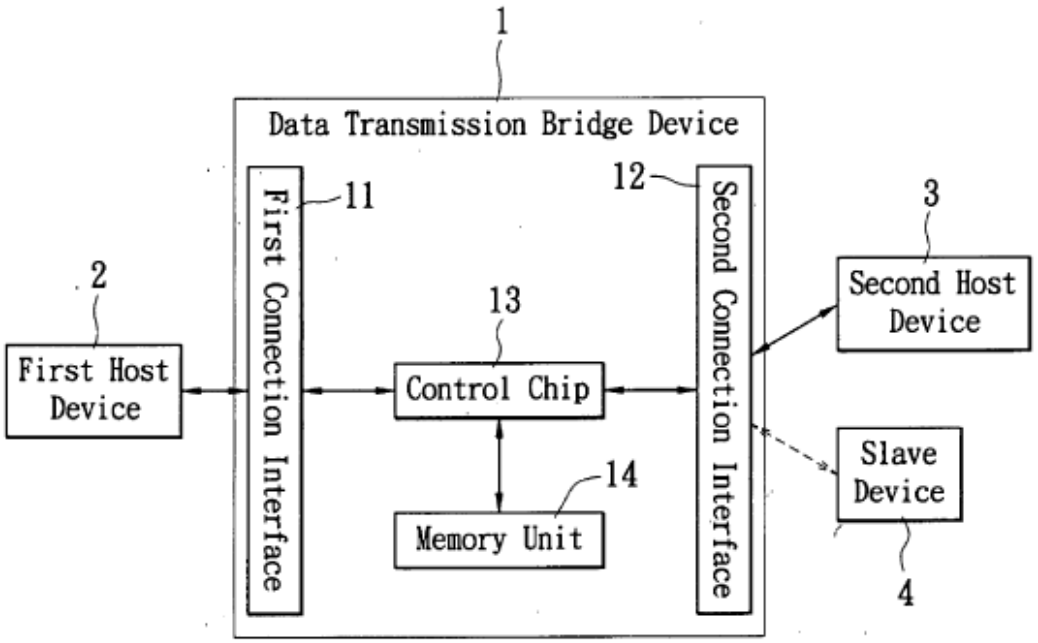

FIG. 1

(EX1015, FIG. 1.

56. Chang II's "main feature" is providing two different transmission paths, automatically detecting whether a host or "slave" USB device is connected to the second connection interface, and selecting one of two different transmission paths between the first and second connection interfaces accordingly. (EX1015, [0021].) Chang II's control chip implements this feature via a process shown in FIG. 6:

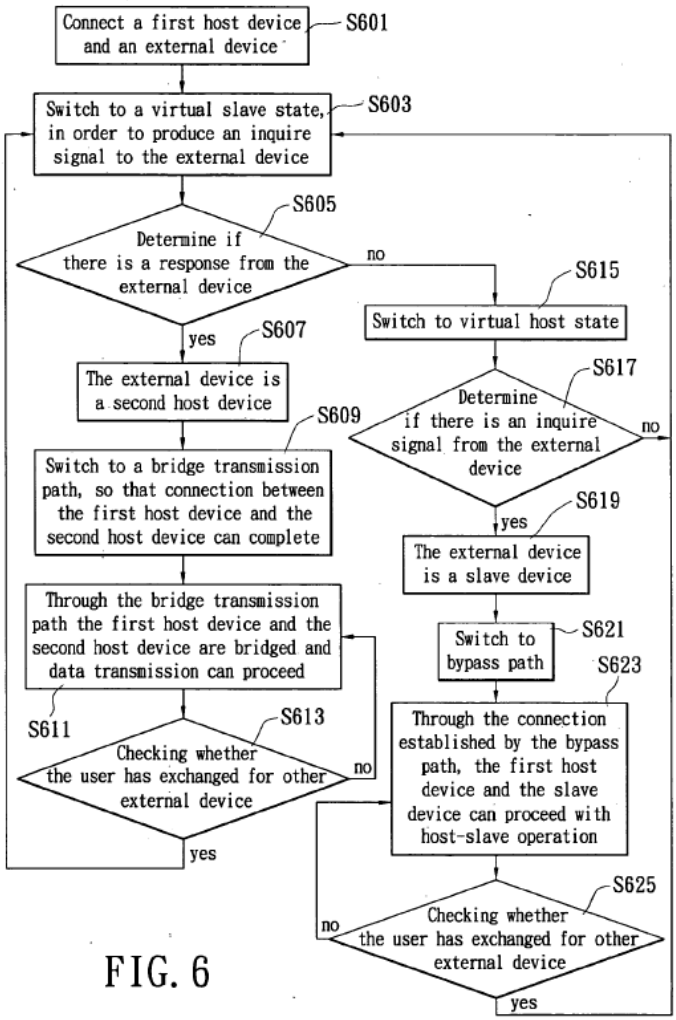

FIG. 6

(EX1015, [0023], [0042], FIG. 6.)

57. As shown in the figure, upon connection of an external device to the second connection interface (S601, S613, S625), a detection unit 134 of the control chip 13 switches to a virtual slave state (S603) and/or a virtual host state (S615), and detects a signal from the external device (S605, S617) on the second connection interface to determine whether the external device is a host device (S607) or a slave device (S619). (EX1015, [0042]-[0046], FIG. 6.) If the external

device is a host device, a CPU 135 of the control chip switches the device to the first connection interface via a bridge transmission path, which includes a first USB controller 131, a buffer unit 136, and a second USB controller 132. (EX1015, [0023].) FIG. 5 illustrates:

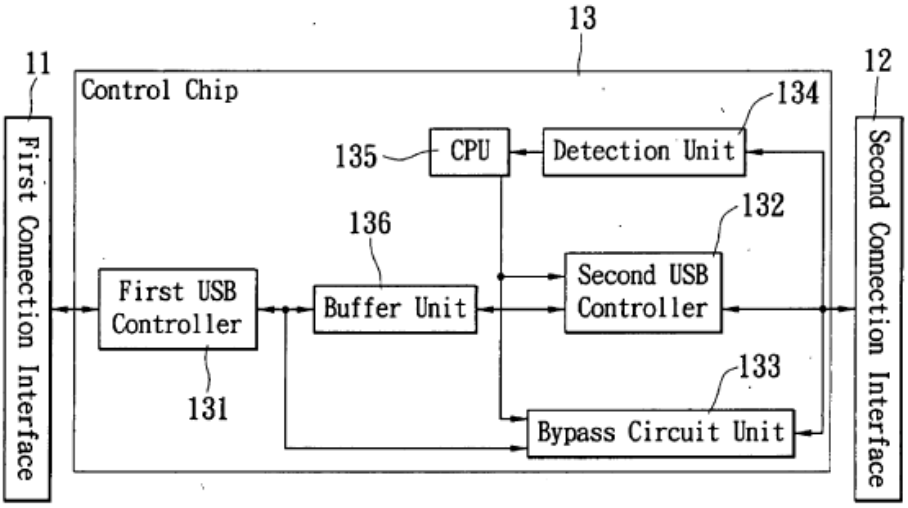

FIG. 5

(EX1015, FIG. 5.)

58. Conversely, if the external device is a host device, CPU 135 switches the device to the first connection interface via a bypass path, which includes the first USB controller 131 and a bypass circuit unit 133, bypassing the buffer unit 136 and the second USB controller 132. (EX1015, [0023].)

59. Upon connecting either the bridge transmission path or the bypass path, the control chip waits for the user to insert a different external device (S613, S625) before performing any additional detection or switching. (EX1015, FIG. 6.)

IX. GROUND I: CLAIMS 13-14 AND 18-20 ARE NOT RENDERED OBVIOUS BY CHANG IN VIEW OF CHANG II AND POSITA KNOWLEDGE

60. The Petition proposes in Ground I that claims 13-14 and 18-20 are met by combining the electronic circuit of Chang with the electronic circuit of Chang II; and by further modifying that combination by inserting circuit elements not found in or suggested by either reference, but which Petitioner claims were within the knowledge of the POSITA. (*See, e.g.*, Petition, 36-48.)

61. In my view, the challenged claims are not rendered obvious by the Petition's proposed combination at least because, as explained below, the proposed combination fails to meet all limitations of the challenged claims. I understand the proposed combination is additionally improper for relying on conclusory statements and unspecific expert testimony to supply missing claim elements, defying Federal Circuit precedent. Furthermore, as explained below, the hindsight-driven combination is technically unsound and would render the references more costly and inoperable for their intended purposes, thus failing to motivate the POSITA to make the proposed combination with any reasonable expectation of success.

A. The Petition's Proposed Combination

62. The Petition proposes three separate implementations of combining Chang, Chang II, and the POSITA's knowledge. (Petition, 36-49.) Each proposed

implementation offers a modification of Chang by Chang II, plus a switching element—either a multiplexer (mux) or a crossbar—inserted downstream of the purported bridge. (Petition, 36-49.)

63. Asked to explain why multiple implementations are proposed, Mr. Welch testified: "It was about if a specific claim had language which could be interpreted in order to have one of these rather than the other." (EX2021, 220:11-221:11.) This admitted claims-first approach to combining the prior art is precisely the type of hindsight reconstruction that is prohibited. Even so, the proposed combination is fundamentally defective and fails to meet the claim limitations as described herein.

1. The Mux Implementation

64. The Petition discloses a proposed implementation (the "mux implementation"), that inserts a multiplexer within Chang's USB hub 40. (Petition, 42-43.) Notably, the Petition does not identify the mux implementation as a basis for challenging any claim. (*See* Petition, 36-87; EX2021, 216:5-217:24 (Petitioner's expert explaining that he chose not to rely on the mux implementation for his claim analysis of a related patent).) The mux implementation is thus outside the scope of Ground I. (*See* 35 U.S.C. § 312(a)(3).)

65. In the Petition's mux implementation, Chang is modified by replacing its ports with dual-role ports; and inserting a 2:1 multiplexer between Chang's port

50 and bridge 52. (Petition, 37-45.) Chang's transmission paths 48 are rewired such that host port 50 is connected to the input of the multiplexer; and the multiplexer can connect host port 50 to either Chang's bridge 52 (Chang II's bridge device 1) or Chang's hub control unit 48, depending on its select lines:

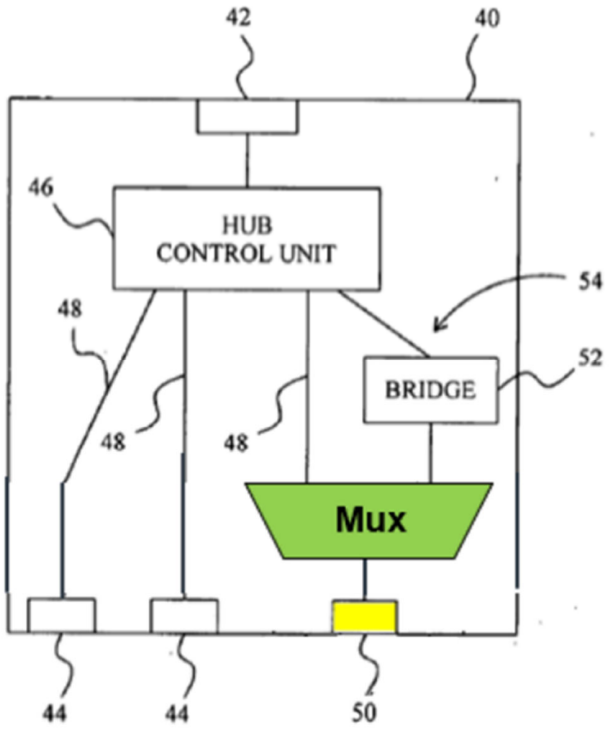

(Petition, 42.)

66. The Petition then modifies the combination further to incorporate Chang II's bridge device 1; the Petition supposes that Chang II's detection unit/bridge would generate signals that control the multiplexer's switching, surmising that doing so "would have been routine and obvious." (Petition, 41-42 n. 11.)

2. The Internal Crossbar Implementation

67. In two other proposed implementations (the "crossbar implementations"), Chang and Chang II are modified by inserting a crossbar switch. (Petition, 45-49.) In the "internal crossbar implementation," or "Hub 46 implementation," the crossbar is inserted within Chang's USB hub 40. (Petition, 45-46.) Various additional modifications are made to the combination of Chang and Chang II. Chang's host port 50 and downlink ports 44 are transformed into dual-role USB ports and connected to inputs of the crossbar; Chang's bridge 52 is decoupled from USB port 50 and instead connected to a first output of the crossbar; and Chang's transmission paths 48 are decoupled from their respective downlink ports 44 and instead connected to additional outputs of the crossbar:

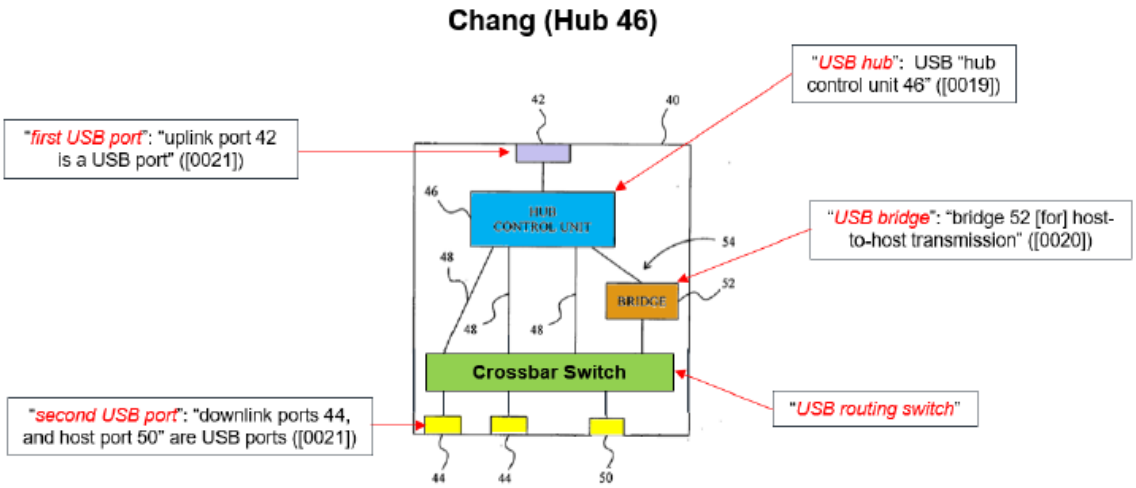

(Petition, 45-48, 57-58.)

sf-6167432

68. According to the Petition, the crossbar can switch a downstream USB port (44, 50) to the hub control unit 46 directly, bypassing bridge 52 (if a connected device is in device mode):

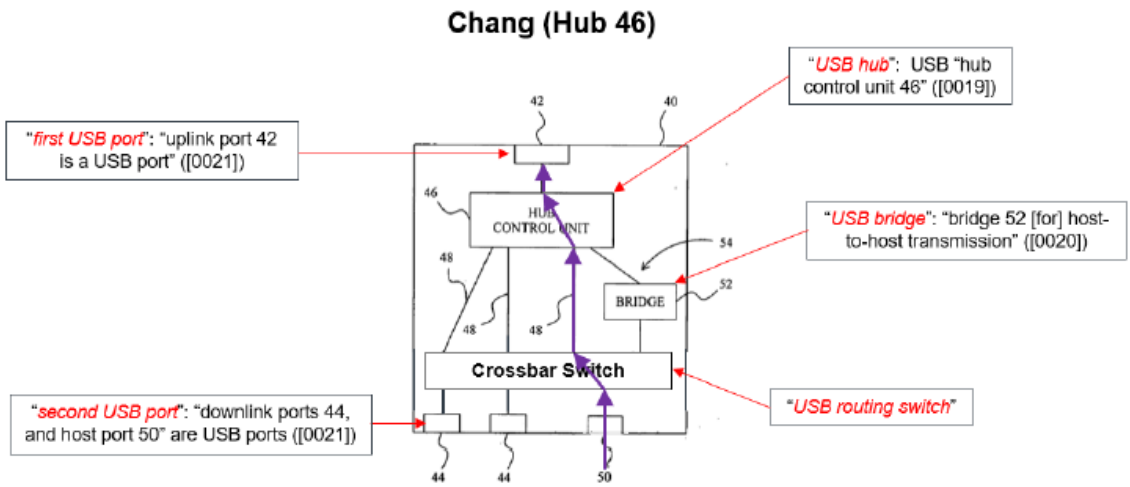

(Petition, 68.)

69. Alternatively, the crossbar can switch the downstream USB port to the hub control unit 46 through bridge 52 (if the connected device is in host mode):

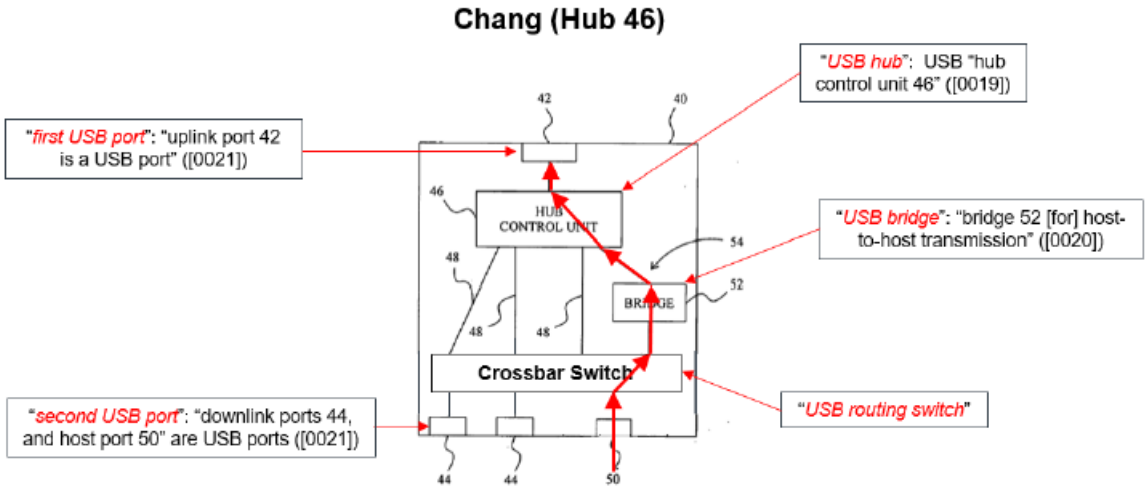

(Petition, 62.)

70. As with the mux implementation, the Petition does not rely on Chang II's internal switching between the bridge path or the bypass path; instead, "asserting the appropriate crossbar control signals connects the consumer product to the bridge (for host-to-host path 54) or directly to the hub (for host-device path 48)." (Petition, 41-42 n. 11, 58-65; EX1013, ¶189.) the Petition apparently relies on signals generated by Chang II's "bridge and/or detection unit" to meet these crossbar control signals, speculating that this proposed modification "would have been routine and obvious." (Petition, 41-42 n. 11.)

3. The External Crossbar Implementation

71. In the "external crossbar implementation," or "Hub 40 implementation," the crossbar is inserted external to Chang's USB hub 40. (Petition, 42-43.) Chang and Chang II are further modified by relocating Chang's bridge 52 outside the USB hub 40; adding new dual-role USB ports (44, 50) outside the USB hub 40; inserting a crossbar between the dual-role USB ports and the bridge 52; and connecting the outputs of the crossbar to the hub control unit 46:

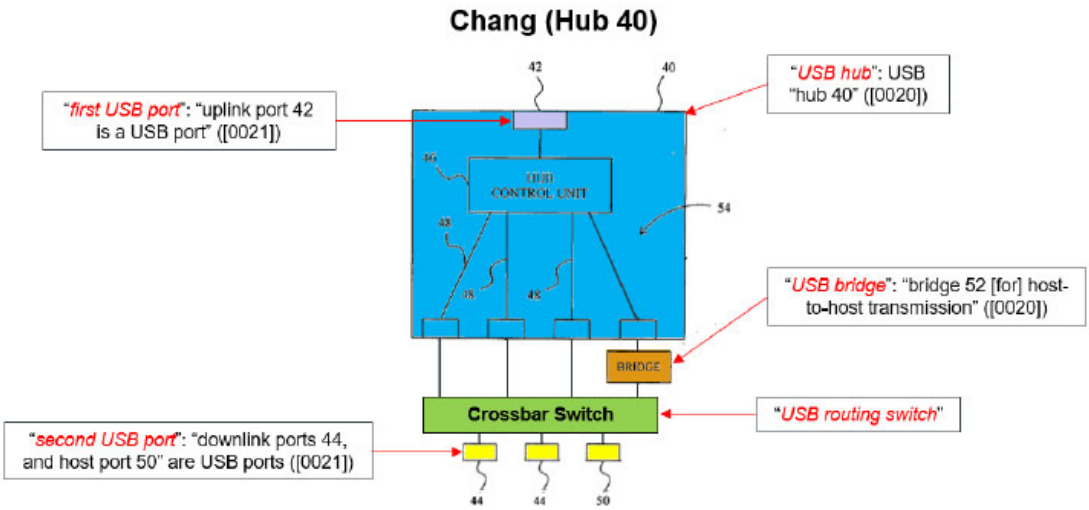

(Petition, 45-49, 58.)

72. According to the Petition, as above, the crossbar can switch a downstream USB port (44, 50) to the hub control unit 46 directly, bypassing bridge 52 (if a connected device is in device mode):

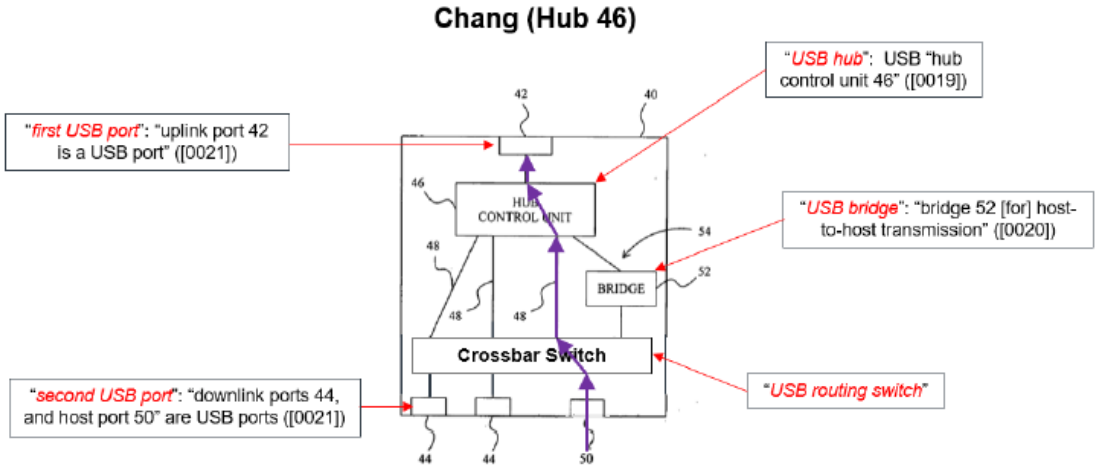

(Petition, 68.)

73. And as above, the crossbar can switch the downstream USB port to the hub control unit 46 through bridge 52 (if the connected device is in host mode):

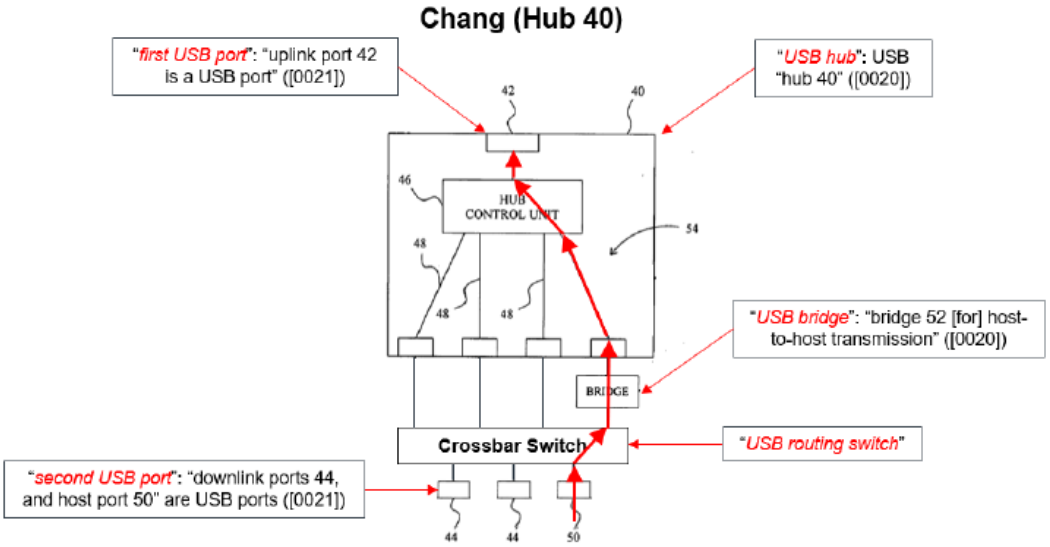

(Petition, 62.)

74. As above, the Petition does not rely on Chang II's internal switching between the bridge path or the bypass path; instead, the crossbar apparently performs the switching based on the signals generated by Chang II's bridge/detection unit. (Petition, 41-42 n. 11, 58-61, 64-65; EX1013, ¶189.) The Petition speculates that this proposed modification "would have been routine and obvious." (Petition, 41-42 n. 11.)

B. The Proposed Combination Is Incomplete and Technically Unsound

75. Petitioner's proposed combination—including all three implementations—is incompletely described in the Petition; and is technically

unsound and would not be operable in the manner set forth in the Petition. The proposed combination further is unsupported by the references, and relies solely on expert testimony that is contradictory and unreliable.

1. The Petition Fails to Show the Switching Limitations With Particularity For Any Challenged Claim

76. All challenged claims recite switching limitations (*e.g.*, a USB routing switch) having a particular configuration. As described above, the proposed combination relies on "off-the-shelf" switching elements—multiplexers or crossbar switches—to implement the claimed USB routing switch. (*See* Petition, 49-50.) These switching elements are absent from Chang and Chang II, and are instead supplied from the POSITA's alleged knowledge. (*See* Petition, 36-48, 41-42 n. 11, 58-61, 64-65.)

77. The claimed USB routing switch cannot be met by off-the-shelf switching components alone. The claims instead have particular requirements for the USB routing switch. *First*, as recited in independent claim 18 and its dependents, the claimed USB routing switch provides a first communication path between the second USB port and the USB host-to-host bridge, and a second communication path between the second USB port and the first USB port that bypasses the USB host-to-host bridge. (EX1003, claim 18.) *Second*, the USB routing switch connects the first communication path when the first consumer device is connected to the second USB port and is operating in a USB host mode,

thereby providing bidirectional initiation of communication between the USB host and the consumer device. (EX1003, claim 18.) *Third*, the USB routing switch connects the second communication path, thereby only responding to communication initiated by the USB host when the first consumer device is connected to the second USB port and is operating in a USB device mode. (EX1003, claim 18.) Independent claim 13 and its dependent claim 14 recite analogous limitations. (EX1003, claim 13.)

78. The Petition fails to show how generic switching elements—muxes or crossbars—would be combined with Chang and Chang II to meet these specialized requirements. As the Petition recognizes, switching components such as multiplexers and crossbars rely on "control signals" or "select lines" to configure which input(s) are routed to which output(s) within the switching element. (Petition, 77, 79-80; EX1013, ¶¶89, 91, 253 (citing EX1055, 284-288, EX1015, [0038]).) For example, as Mr. Welch provides, the switching paths of a crossbar are controlled by its control signals, as defined by a truth table:

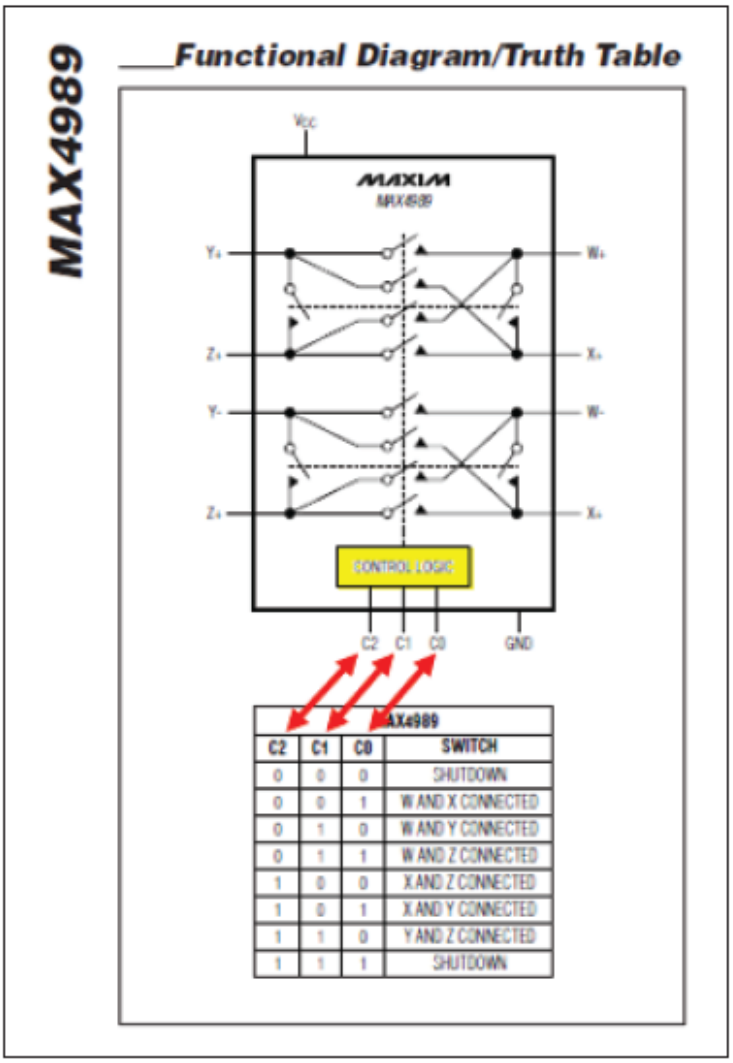

(EX1013, ¶¶252 (citing EX1063, 8), 228.)

79. But the Petition is incomplete, inconsistent, and erroneous about how those control signals would be supplied or implemented in the proposed combination. Instead of explaining with particularity how the control signals of the multiplexer or crossbar would implement the claimed switching configurations, the Petition relegates the required control signals to a footnote, speculating that "It

would have been routine and obvious for the detection unit and/or bridge [of Chang II] to control the switching functionality." (Petition, 41-42 n. 11.)

80. The Petition's evidentiary support is limited and nonspecific. The Petition identifies that "Chang II's bridge controls routing"; observes generically that the Chang II bridge includes a control chip and detection unit, and that Chang II discloses an "inquire signal" internal to the control chip; and cites to Mr. Welch's description of garden-variety multiplexers and crossbars. (Petition, 41-42 n. 11, 59, 64-65.) From this, the Petition surmises that "any known host/device detection technique could be (and would have been) used in the Crossbar Implementations" to determine when the consumer device is in a USB host mode and in a USB device mode. (Petition, 58-59.) The Petition further concludes, without explanation, that "Upon detection, asserting the appropriate crossbar control signals connects the consumer product to the bridge (for host-to-host path 54) or directly to the hub (for host-device path 48)." (Petition, 61.)

81. The Petition fails to set forth how the inquire signal of Chang II (or any other signal) would be utilized by the crossbar in the Crossbar Implementations to perform the claimed determining or connecting the USB ports in the specific configurations recited by the claims; or how any such modification to Chang and Chang II would be within the scope of the POSITA's general knowledge. To the contrary, while the POSITA's knowledge may include

multiplexer and crossbar components, it does not include the specific knowledge of how to use such generic switching components to modify Chang and Chang II to meet the specific switching requirements of the claims. And while Mr. Welch's declaration at paragraph 159 provides description of Chang II's detection unit, which "produces either a 'bridging detection signal' (after detecting a host) or 'slave detection signal' (after detecting a device)," Mr. Welch fails to explain how these signals could satisfy the claim limitations; and in any event, the Petition does not rely on this portion of Mr. Welch's declaration to meet any limitation of any challenged claim. (EX1013, ¶159.)

82. The Petition's generic and evidence-starved description of switching cannot meet the Petitioner's duty to identify, "in writing and with particularity … the grounds on which the challenge to each claim is based, and the evidence that supports the grounds for the challenge". (35 U.S.C. § 312(a)(3).) The Petition is deficient with respect to all challenged claims for at least this reason.

2. The Proposed Combination Is Technically Unsound Because the USB Routing Switch Would Disconnect Its Control Signals

83. The Petition's proposed combination simply would not operate as described, and the Petition is further deficient with respect to all challenged claims for at least this additional reason.

84. Even though Chang II provides its own mechanism for switching transmission paths based on the mode of a connected device, the proposed combination does not rely on Chang II's switching elements to meet the claimed USB routing switch. (*See* EX2021, 147:10-24, 148:11-25.) Instead, the Petition relies on a *crossbar* as the USB routing switch. (Petition, 56-58; EX1013, ¶¶185, 189-190.) As described above in Section IX.A, the crossbar (whether in the internal or external implementation) is used to switch between (1) connecting a downstream USB port directly to the hub control module 46, if a device on the downstream port is in device mode; and (2) connecting the USB port to the hub control module 46 via the bridge, if the device on the downstream port is in host mode.

85. Notwithstanding the Petition's deficient description of the crossbar control signals, discussed above, the proposed combination relies on Chang II's control chip 13 and detection unit 134 in the bridge to provide the control signals that cause the crossbar to route the downstream ports through the appropriate transmission path. For example, the Petition indicates that "*Chang II's bridge* controls routing, *viz.*, 'Bridge Device 1' in Fig. 1 includes 'control chip 13' (shown in Fig. 5) with 'detection unit' (134) and CPU (135)"; and further that "it would have been obvious for *Chang's bridge and/or detection unit* to control, *e.g.*, the switch's select lines." (Petition, 41-42 n. 11, 50; EX1013, ¶¶192-193, 227-228.)

Similarly, Mr. Welch clarifies that "Chang II's bridge includes [the] '*detection unit*' (in the control chip) that detects the mode of the downstream product for selection of the appropriate transmission path." (EX1013, ¶193 (citing EX1015, [0022]-[0023], [0034]); *see also* EX1015, [0016], [0022]-[0028], Fig. 2 (circuit diagram of bridge device and control chip).)

86. The Petition relies on the detection unit's control signals to connect the appropriate transmission path: "Upon detection, *asserting the appropriate crossbar control signals* connects the consumer product to the bridge (for host-to-host path 54) or directly to the hub (for host-device path 48)." (Petition, 61; EX1013, ¶254.) For instance, the Petition describes that "Chang II's control chip selects the bridge path upon detecting a downstream host and a bridge connection is made to 'complete the bridging.'" (Petition, 64-65 (citing EX1015, [0026], [0021], [0038].) The Petition further relies on Mr. Welch's declaration, which explains the mechanism by which the detection unit of the bridge provides the control signals: "the detection unit detects the connection of a host or device by (1) sending an 'inquire signal' and receiving a response (when a host connects) or (2) receiving an 'inquire signal' (when a device connects). The detection unit then produces either a 'bridging detection signal' (after detecting a host) or 'slave detection signal' (after detecting a device). These signals cause the switching to the appropriate transmission 'path' (to use the bridge or bypass the bridge)."

(EX1013, ¶¶159 (internal citations omitted), 80, 189-190, 259.) For instance, these detection signals "would be used to control the crossbar control signals and establish the appropriate routing connections" (*i.e.*, for a downstream port to use the bridge or to bypass the bridge). (EX1013, ¶¶252, 159, 190, 193, 265.)

87. In order to send or receive the inquire signal, and thus produce the bridging/slave detection signals, the detection unit 134 executes the process shown in FIG. 6 of Chang II, described above. (Petition, 32, 59; EX1015, FIG. 6, [0024]; EX1013, ¶¶159, 189 (citing EX1015).)

88. But the proposed combination includes a structural flaw. As Mr. Welch cautions: "the detection unit *must connect* to the downstream port to detect the mode, as shown in Chang II." (EX1013, ¶193 (emphasis added).) But in the proposed combination, the control chip and detection unit (in the bridge) are *separated* from the downstream ports (*i.e.*, 44, 50) by the routing switch—*i.e.*, a crossbar[2]. The Petition illustrates this separation, in both the Hub 46 and Hub 40 implementations:

---

[2] Because the Petition does not contend that its mux implementation meets any challenged claim, as noted above, the mux implementation is not specifically discussed here. However, the structural flaw described herein would apply equally well to the mux implementation.

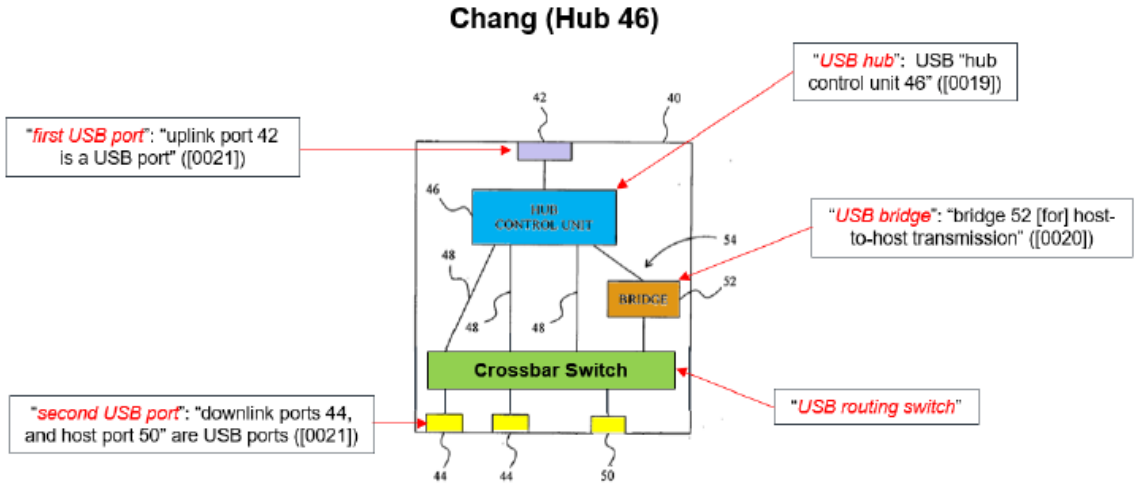

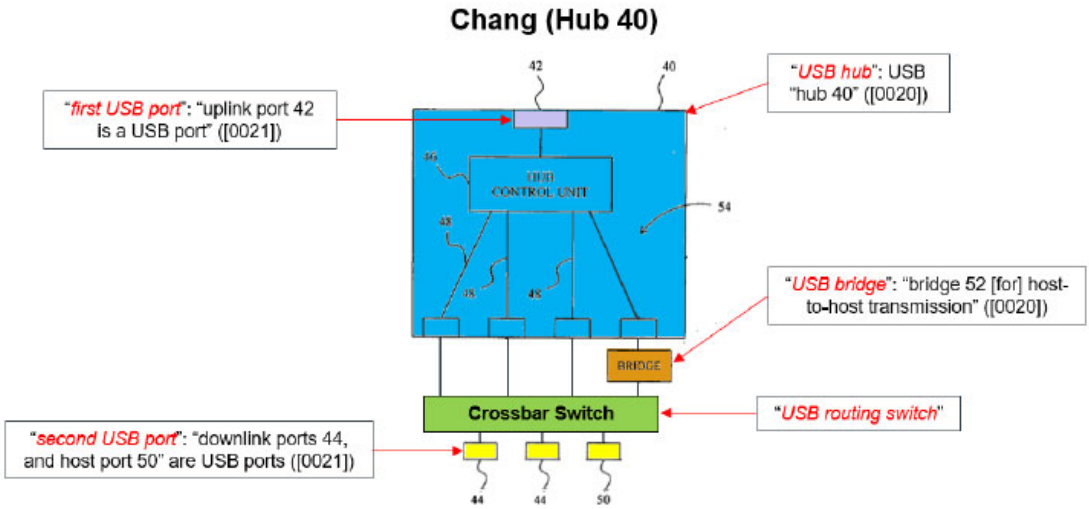

(Petition, 45-49.)

89. The behavior of the routing switch demonstrates the need for Mr. Welch's admonition. When the crossbar connects the downstream port 50 to the hub via the bridge 52, the bridge 52 is connected to the downstream port 50 through the switching element:

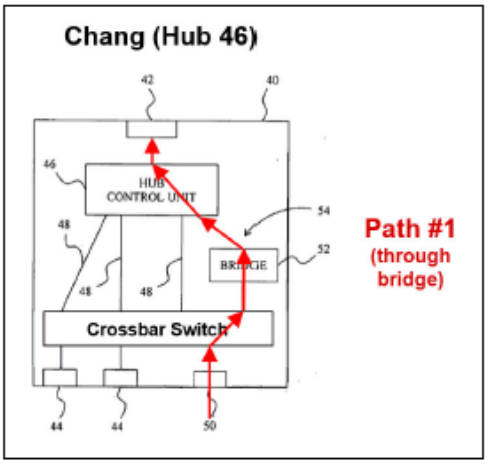

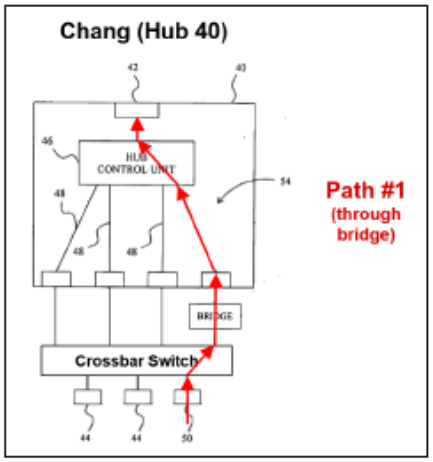

(Petition, 80, 58.)

90. But when the crossbar connects the downstream port 50 via the direct-to-hub path—*i.e.*, when the device on the port is in device mode—it "bypasses [the] bridge" entirely:

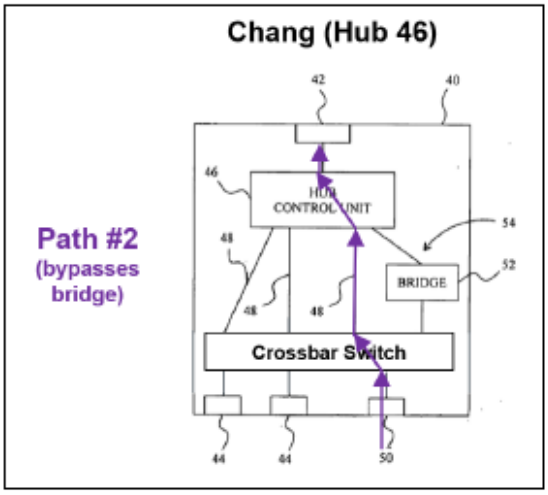

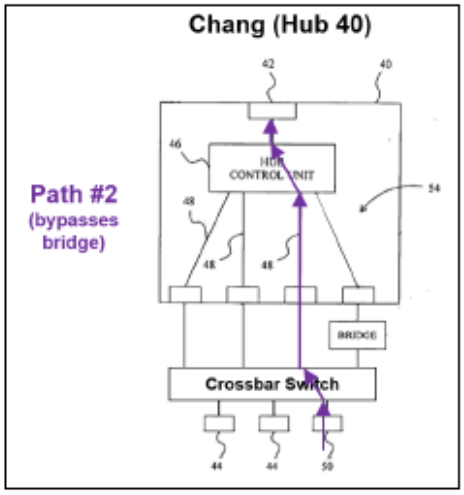

(Petition, 81, 63-64; *see* EX1013, ¶¶159 ("These signals cause the switching to the appropriate transmission '*path*' (to use the bridge or bypass the bridge)"), 179, 190, 247.)

sf-6167432

91. Consistent with Mr. Welch's description of crossbars and supporting evidence, the crossbar selecting the direct-to-hub path electrically disconnects the bridge device from all downstream USB ports. (*See, e.g.*, EX1013, ¶93.) For example, Mr. Welch explains that in a switch, a disconnected path "will be left floating (*e.g.*, tri-stated)." (EX1013, ¶188.) Similarly, a reference cited by Mr. Welch explains that transmission gates, such as those that connect a crossbar's inputs to its outputs, comprise transistors that switch between a closed circuit and an open circuit of "essentially infinite resistance." (EX1069, 23.) And the MAX4989 switch, on which Mr. Welch relies to illustrate a crossbar, indicates that the control logic operates to electrically connect and disconnect (via open circuits) its inputs and outputs:

MAX4989

Functional Diagram/Truth Table

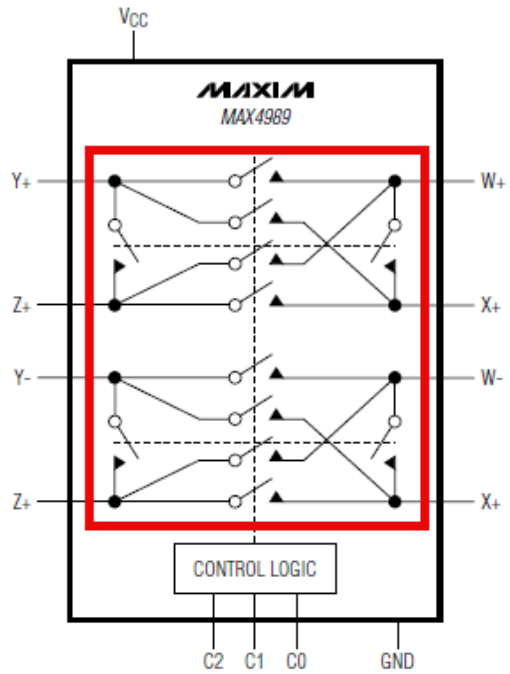

MAX4989			
C2	C1	C0	SWITCH
0	0	0	SHUTDOWN
0	0	1	W AND X CONNECTED
0	1	0	W AND Y CONNECTED
0	1	1	W AND Z CONNECTED
1	0	0	X AND Z CONNECTED
1	0	1	X AND Y CONNECTED
1	1	0	Y AND Z CONNECTED
1	1	1	SHUTDOWN

(EX1063, 8 (annotated); *see also* EX1013, ¶58.)

92. When the bridge device is bypassed by the crossbar, it is thus electrically disconnected from the downstream USB ports coupled to the crossbar. Because the bridge device and its control chip and detection unit cannot send or

receive signals (*e.g.*, "inquire signals") from a downstream USB port in this state, the bridge device is rendered incapable of detecting whether a device is in host or device mode, such as described above for FIG. 6 of Chang II. This, accordingly, prevents the bridge device and the control chip and the detection unit from generating the bridging detection signal, or otherwise providing control signals to the crossbar. Consequently, once the USB hub module in the proposed combination switches to the device mode, it is *incapable* of directing the crossbar to perform any further switching operations—including connecting or reconnecting any downstream ports to the bridge 52 or to the hub control unit 46 (*e.g.*, in response to a connected device switching to a host or device mode). (*See* Petition, 33-36; EX1013, ¶¶80, 159, 251.)

93. FIG. 6 of Chang II further demonstrates the flaw in the proposed combination. As described above, FIG. 6 illustrates the process performed by Chang II's bridge device (*i.e.*, control chip 13 and detection unit 134 of the bridge device) to detect whether a connected external device is in host mode or device ("slave") mode.

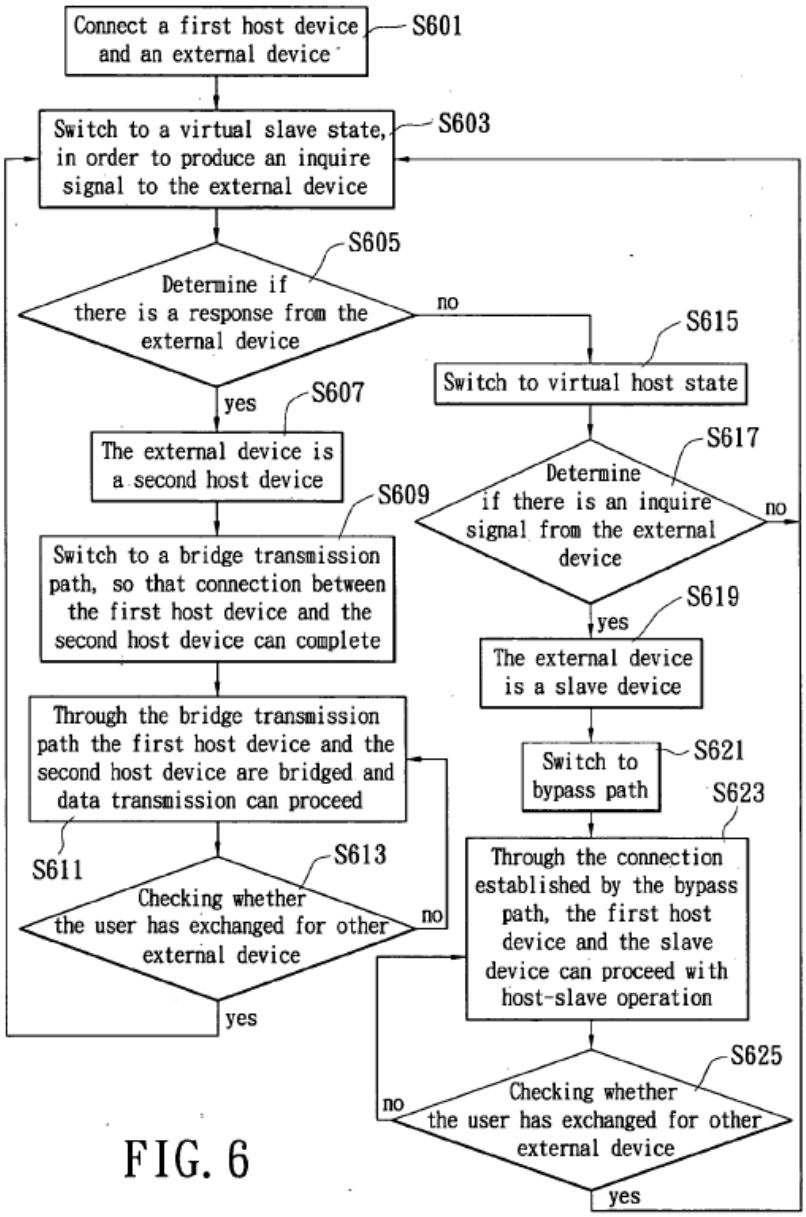

FIG. 6

(EX1015, FIG. 6.)

94. In the illustrated process, the control chip exchanges inquire signals with the external device at least at stages S603, S605, and S617; and checks for a newly inserted external device at stages S601, S613, and S625. (EX1015, FIG. 6.)

In the proposed combination, once a connected device is detected to be in device mode, the crossbar switches to a direct-to-hub path that bypasses the bridge device and disconnects it from downstream ports, as described above. In this disconnected state, the bridge device is unable to exchange signals with an external device; thus, the bridge device will never reach stages S607 or S619 in the FIG. 6 process and cannot direct the crossbar to switch paths accordingly. Moreover, because the bridge device is unable to detect a newly inserted external device, the Petition's USB hub module will remain in the device mode even if a new device is connected.

C. The Proposed Combination Does Not Meet the Claim Limitations

i. Claim 13

95. The Petition's proposed combination fails to meet the limitations of claim 13 and its dependent claim 14.

a. The Proposed Combination Does Not Meet the Claimed *Determining When the Consumer Device Is Operating In A USB Host Mode And In A USB Device Mode*

96. Claim 13, and its dependent claim 14, recite *determining when the consumer device is operating in a USB host mode and in a USB device mode*. (EX1003, claims 13, 14.) To meet this claim limitation, the Petition relies on its proposed Crossbar Implementations, in which Chang II's bridge and detection unit "automatically operate[s] … to determine the type of device connected with the

second connection interface, and a detection signal is produced accordingly." (Petition, 58-59 (citing EX1015, [0013], [0027], [0046]); X1013, ¶¶189, 193.)

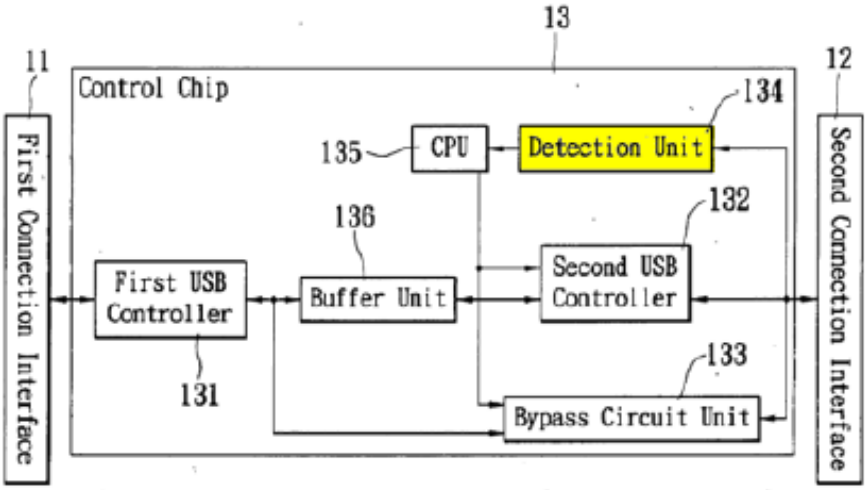

FIG. 5

(Petition, 58-59 (citing EX1015, Fig. 5).)

97. The Petition further relies on Chang II's description of "operational details of detection unit 134," such as by providing an inquire signal, with Fig. 6 of Chang II providing the host/device detection algorithm. (Petition, 58-59 (citing EX1015, [0038]-[0040], [0042]-[0045], Fig. 6).)

98. But as explained above in Section IX.B, the Petition's characterization of the proposed combination is inaccurate, and the Petition thus relies on faulty premises to meet these limitations. For example, the proposed combination is incapable of providing the claimed determining when the consumer device is operating in a USB host mode and in a USB device mode. Instead, it reaches a

state in which the crossbar routes the downstream consumer device directly to the USB hub, bypassing and disconnecting the bridge, control chip, and detection unit on which the Petition relies; and rendering it unable to detect the consumer device's operating mode. For example, once the consumer device has been routed directly to the USB hub, bypassing the bridge, the consumer device may operate in a USB host mode or in a USB device mode, but the detection unit will be unable to determine any such operation mode as described above in Section IX.B. Thus, the proposed combination cannot determine *when* the consumer device is operating in a USB host mode and in a USB device mode and thus cannot meet the claim limitation.

99. Further, the Petition relies for this element on the testimony of Mr. Welch, which is inaccurate and unreliable for the reasons described herein and should be afforded no weight. The Petition thus fails to show this claim element is met.

b. The Proposed Combination Does Not Meet The Claimed *Connecting The Consumer Device* Steps

100. The crossbar implementations similarly cannot meet the required steps of connecting the consumer device via the second USB port to the USB host via the first USB port through the USB routing switch and the USB bridge, thereby providing bidirectional initiation of communication between the USB host and the consumer device when the consumer device is determined to be in the USB host

mode; and connecting the consumer device via the second USB port to the USB host via the first USB port through the USB routing switch and the USB hub thereby bypassing the USB bridge to only respond to communication initiated by the USB host when the consumer device is determined to be in the USB device mode. (EX1003, claim 13.)

101. To meet these claimed steps, the Petition relies on its proposed Crossbar Implementations being able to "connect the appropriate transmission path upon detecting the downstream consumer product's operating mode (i.e., device/host)." (Petition, 60-63.) The Petition explains the limitations are met because "Upon detection, asserting the appropriate crossbar control signals connects the consumer product to the bridge (for host-to-host path 54) or directly to the hub (for host-device path 48)." (*Id.*) Further, the Petition apparently relies on the detection unit 134 of Chang II's bridge to meet these crossbar control signals. (Petition, 41-42 n. 11, 50; EX1013, ¶193; EX1015, [0022]-[0023], [0034].)

102. But as with the "determining" step described above, the Petition's characterization of the proposed combination is inaccurate, and the Petition thus relies on faulty premises to meet these limitations. For example, the proposed combination does not "connect[] said first communication path when the first consumer device is connected to said second USB port and is operating in a USB

host mode"; or "connect[] said second communication path … when the first consumer device is connected to said second USB port and is operating in a USB device mode."

103. Instead, as described above in Section IX.B, the proposed combination reaches a state in which the crossbar routes the downstream consumer device directly to the USB hub, disconnecting the bridge and detection unit that generates the crossbar control signals; and rendering it unable to detect the consumer device's operating mode, let alone "connect the appropriate transmission path" or assert "the appropriate crossbar control signals," as described above. The proposed combination is thus unable to connect the first/second communication path when the consumer device is determined to be in the USB host/device mode, as required by claim 13. Further, the Petition relies for this element on the testimony of Mr. Welch, which is inaccurate and unreliable for the reasons described herein and should be afforded no weight. The Petition thus fails to show this claim element is met.

ii. Claim 14

104. Claim 14 depends from claim 13. In addition to the reasons described above for claim 13, claim 14 is not rendered obvious because the Petition's proposed combination cannot meet claim 14's limitation that *the step of determining if when the consumer device is operating in the USB host mode or in*

the USB device mode is performed by the USB routing switch. (EX1003, claim 14.) This limitation is not taught by any reference, and further cannot be met while also satisfying the parent claim's requirement of *bypassing the USB bridge*.

105. To show that the "determining" limitation is performed by the USB routing switch, Petitioner speculates that it would have been obvious for the proposed combination to feature a single integrated circuit (IC) including both the alleged USB routing switch (*i.e.*, the crossbar) and the detection unit 134 of Chang II, which is alleged to meet the "determining" limitation. (Petition, 69-71, 58-59.)

106. This fails to show that claim 14 is met. First, the Petition points to no evidence of a single IC that includes both detection unit 134 and the crossbar relied upon by the Petition. Instead, the Petition apparently contends the POSITA would have known to design a custom IC, speculating that the POSITA "would have known how to easily do so," and that it would have been "common sense." (Petition, 69-71.)

107. But IC design is a complex field posing non-trivial technical challenges, and requiring specific electronic design expertise. These complexities are overlooked by the Petition, which fails to explain in any detail how the POSITA would have been able to combine the crossbar and Detection Unit 134 into a single IC, and to incorporate that IC into the proposed combination, with any reasonable expectation of success. This is particularly so given the level of skill in

the art, which under either party's formulation does not include any IC design experience. (*See supra* Section V.D; Petition, 22-23.) Moreover, as the Federal Circuit has explained, the Petition's appeal to "common sense" to supply missing claim limitations is proper only if supported by evidence and a reasoned explanation—both absent here. *Arendi S.A.R.L. v. Apple Inc.*, 832 F.3d 1355, 1363 (Fed. Cir. 2016).

108. Second, the Petition's proposed IC would defeat another limitation of claim 14: that connecting the consumer device to the USB host through the USB routing switch when the device is in USB device mode must *bypass* the USB bridge. (EX1003, claim 13.) As proposed by Petitioner, claim 14 is met by a single IC component that includes both the USB routing switch and Chang II's detection unit 134. (Petition, 69-70.) But as Petitioner and its expert recognize, the detection unit 134 is a component of the USB bridge. For example, the Petition observes that Chang II's "'Bridge Device 1' in Fig. 1 includes 'control chip 13' […] with 'detection unit' (134) and CPU (135)." (Petition, 41-42 n. 11.) And Mr. Welch explains that "Chang II's bridge includes [the] '*detection unit*' (in the control chip) that detects the mode of the downstream product for selection of the appropriate transmission path." (EX1013, ¶193 (citing EX1015, [0022]-[0023], [0034]); *see also* EX1015, [0016], [0022]-[0028], Fig. 2 (circuit diagram of bridge device and control chip).)

109. The Petition relies on this detection unit, and thus the bridge, to perform the determining step. (Petition, 58-59.) Thus, in the proposed combination, the same electronic component (the IC) comprises both the bridge and the USB routing switch. This IC makes it impossible for the proposed combination to connect the consumer device through the USB routing switch, and also to bypass the USB bridge, as required by claim 14. The proposed combination fails to satisfy claim 14 for at least this additional reason.

iii. Claims 18-20

a. The proposed combination does not meet the claimed *USB routing switch*

110. Claim 18, and its dependent claims 19 and 20, require a USB routing switch configured according to specific requirements. For example, the claimed USB routing switch provides a first communication path between the second USB port and the USB host-to-host bridge, and a second communication path between the second USB port and the first USB port that bypasses the USB host-to-host bridge. Further, the claimed USB routing switch connects the first communication path when the first consumer device is connected to the second USB port and is operating in a USB host mode, thereby providing bidirectional initiation of communication between the USB host and the consumer device. The USB routing switch also connects the second communication path, thereby only responding to communication initiated by the USB host, when the first consumer device is

connected to the second USB port and is operating in a USB device mode. (EX1003, claims 18-20.)

111. To meet this claim limitation, the Petition relies on its proposed Crossbar Implementations "automatically detecting the type of device connected (host or slave)," and thus "switch[ing] to the proper transmission path." (Petition, 77-82; *see* EX1013, ¶¶189, 193.) The Petition explains the limitation is met by "asserting appropriate crossbar control signals based on the downstream product's host/device mode." (Petition, 77; *see* EX1013, ¶¶189, 193.) Further, the Petition apparently relies on Chang II's bridge, including the control chip 13 and detection unit 134, to meet these crossbar control signals. (Petition, 41-42 n. 11; *see* EX1013, ¶¶189, 193.) But as the Petition illustrates, when the host-device path is selected, the bridge is bypassed entirely:

Chang (Hub 46)

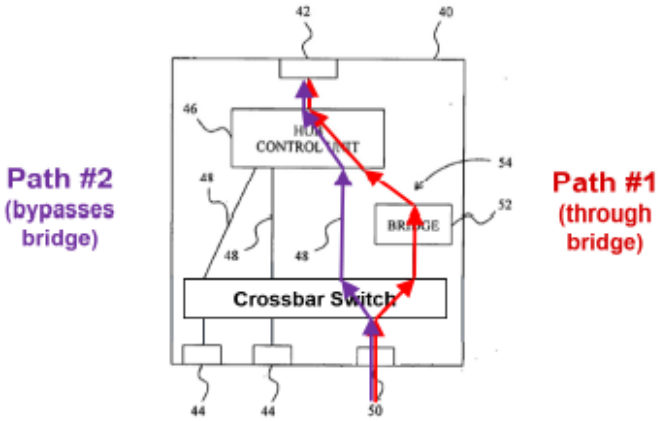

Chang (Hub 40)

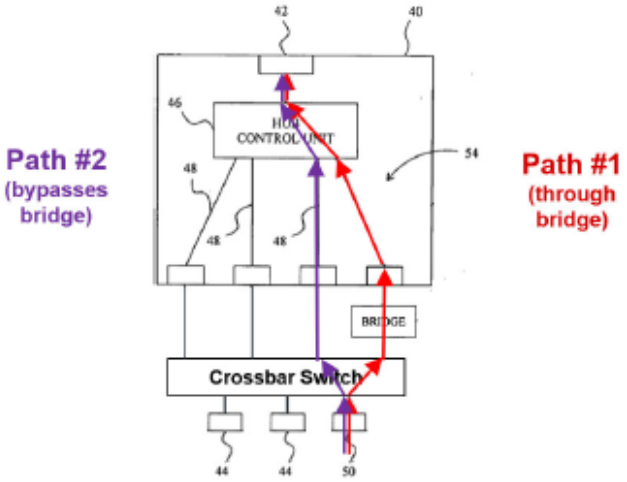

(Petition, 77-78.)

112. But as explained above in Section IX.B, and further with respect to claim 13, the Petition's characterization of the proposed combination is inaccurate, and the Petition thus relies on faulty premises to meet these limitations. For example, the proposed combination does not "automatically detect[] the type of

device connected (host or slave)," and thus "switch to the proper transmission path." (Petition, 77.)

113. Instead, as described above, the proposed combination reaches a state in which the crossbar routes the downstream consumer device directly to the USB hub, disconnecting the bridge, control chip, and detection unit that generate the crossbar control signals; and rendering it unable to detect the consumer device's operating mode. The USB routing switch of the proposed combination is thus unable to connect the first/second communication path when the consumer device is operating in a USB host/device mode, as required by claim 18. Further, the Petition relies for this element on the testimony of Mr. Welch, which is inaccurate and unreliable for the reasons described herein and should be afforded no weight. The Petition thus fails to show this claim element is met.

b. The proposed combination does not meet the claimed *USB hub including a first USB port and a second USB port*

114. As described above in Section V.A, the Board declined to adopt the proposed construction of claim 18 as *a USB hub* <u>*interconnected to*</u> *a first USB port and a second USB port*. (DI, 15.) Similarly, the Board declined to adopt the proposed construction of claim 19 as *wherein the USB hub* <u>*is interconnected to*</u> *a third USB port*. (DI, 15.) Accordingly, for the purposes of this proceeding, claim 18 and its dependent claims 19 and 20 require a USB hub <u>*including*</u> a first USB

port and a second USB port. Similarly, claim 19 (and its dependent claim 20) further require that the USB hub *includes* a third USB port.

115. In addition to the reasons discussed above, claims 18-20 are additionally not rendered obvious because the Petition's proposed combination cannot meet these claim limitations. That is, neither of the two crossbar implementations relied on by the Petition—the internal (Hub 46) and external (Hub 40) implementations—can meet the claimed USB hub that includes the claimed USB ports.

116. First, with respect to the internal crossbar implementation, the Petition relies on the USB hub control unit 46 of Chang as the alleged USB hub, as illustrated below:

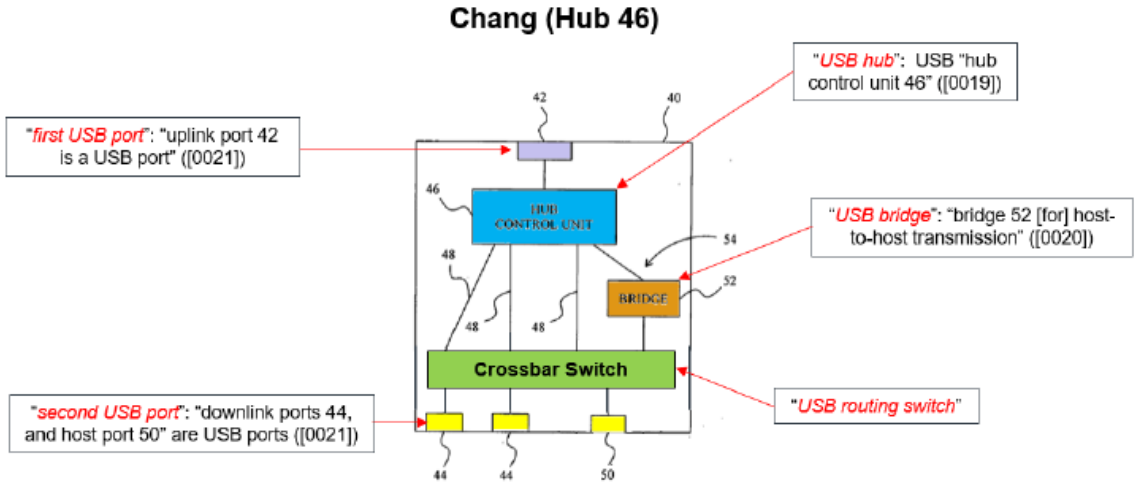

(Petition, 71-73 (citing EX1014, Fig. 3 (modified and annotated by Petitioner)), 51-53.)

117. The internal crossbar implementation of the proposed combination cannot meet the claimed USB hub at least because the alleged USB hub does not include the first USB port and the second USB port. Instead, the first USB port (identified as uplink port 42) and second USB port (downlink ports 44 and host port 50) are located entirely outside of the alleged USB hub 46, and are further separated from the alleged USB hub by the crossbar switch, as evident from the above figure and the Petitioner's annotations. Similarly, Chang discloses that the hub control unit 46 (the alleged USB hub) is separated from the host port 50 (the alleged second USB port) by bridge 52; this configuration is inconsistent with the hub control unit 46 including the host port 50. (EX1014, [0020]; Petition, 29.)

118. The Petition does not dispute that the USB hub does not include the first and second USB ports; to the contrary, the Petition contends only that the USB hub is *interconnected to* the first and second USB ports, without addressing whether the USB hub includes those ports. (Petition, 71-73, 51-53.)

119. Second, with respect to the external crossbar implementation, the Petition relies on the USB hub 40 of Chang as the alleged USB hub, as illustrated below:

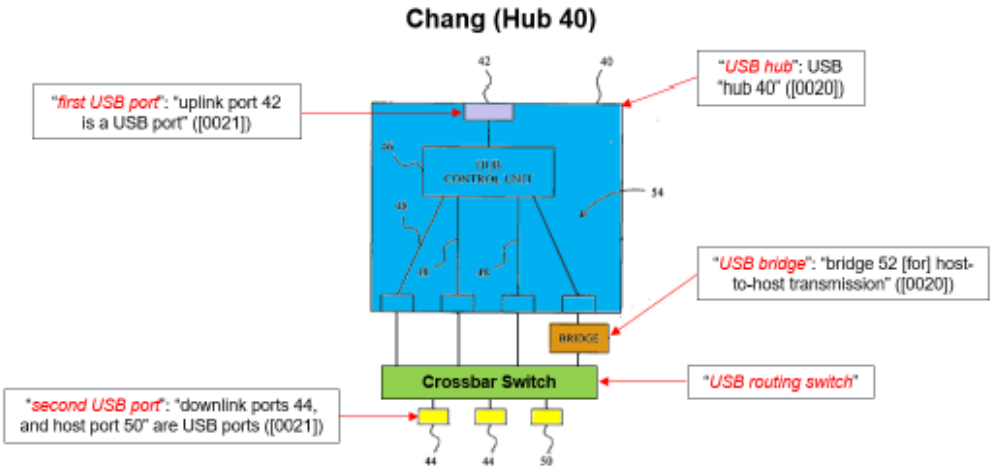

(Petition, 71-73 (citing EX1014, Fig. 3 (modified and annotated by Petitioner)), 53-54.)

120. The external crossbar implementation of the proposed combination cannot meet the claimed USB hub at least because the alleged USB hub does not include the claimed second USB port. Instead, the second USB port (identified as downlink ports 44 and host port 50) are located entirely outside of the alleged USB hub 40, and are further separated from the alleged USB hub by the crossbar switch, as evident from the above figure and the Petitioner's annotations.

121. The Petition does not dispute that the USB hub does not include the second USB port; to the contrary, the Petition contends only that USB hub is *interconnected to* the second USB port, without addressing whether the USB hub includes that port. (Petition, 71-73, 53-54.)

122. Likewise, with respect to claims 19 and 20, the proposed combination cannot meet the claimed USB hub that <u>*includes*</u> a third USB port. As the Petition

explained, "In the Crossbar implementations, the 'third USB port' is any of ports 44 or 50 not mapped as the 'second USB port.'" (Petition, 82.) Thus, in either the internal or external crossbar implementations, the alleged USB hub (*i.e.*, hub control unit 46 or USB hub 40, respectively) does not include the third USB port for at least the reasons described above with respect to the second USB port (downlink ports 44 and host port 50). The proposed combination cannot meet claims 19 and 20 for this additional reason.

iv. Claims 19, 20

123. Claim 19 depends from claim 18, and claim 20 depends from claim 19. In addition to the reasons described above for parent claim 18, claims 19 and 20 are not rendered obvious because the Petition's proposed USB routing switch cannot meet *connecting a third communication path between said third USB port and said first USB port when a second consumer device is connected to said third USB port and is operating in the USB device mode*, as recited in claim 19.

124. As described above, the Petition relies on Chang II's control chip 13 and detection unit 134 of the bridge device to generate control signals that direct the crossbar to select a transmission path for a downstream USB port. (Petition, 82-85.) However, as the Petition acknowledges, Chang II's bridge device includes only a "single port" that accepts either a host device or a slave device:

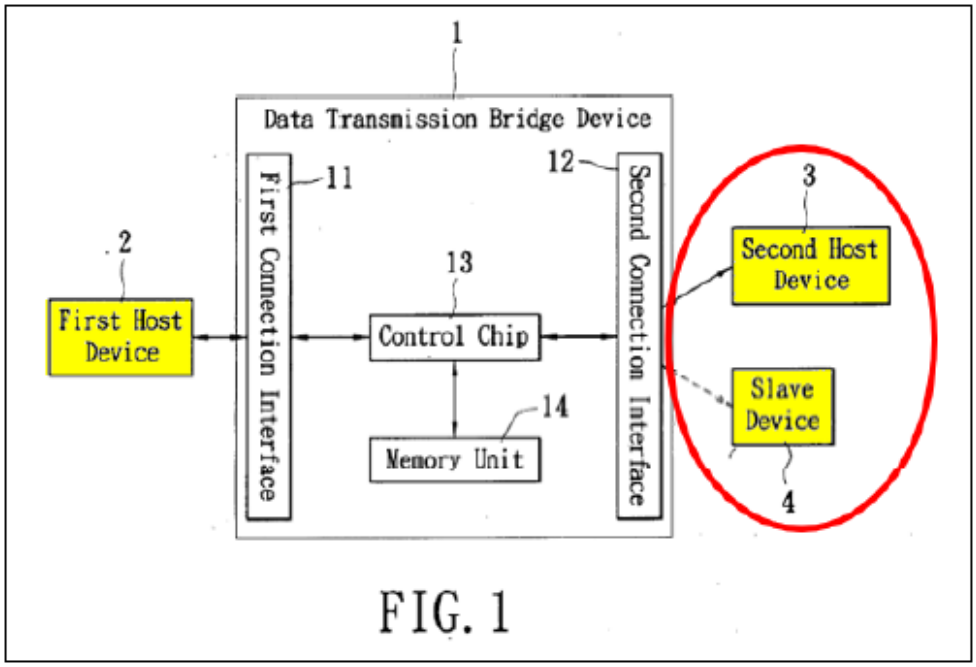

FIG. 1

(Petition, 30-31; EX1015, [0030], [0012].)

125. The proposed combination thus lacks the requisite control logic for configuring the crossbar to connect multiple devices (*i.e.*, the claimed first and second consumer devices on the second and third USB ports) to the first USB port in the manner required by claim 19. And the Petition does not offer any modification that would permit Chang II's bridge to accept multiple devices. The proposed combination cannot meet claims 19 and 20 for at least this reason.

126. Moreover, even if Chang II were modified to detect multiple downstream device connections, the bridge device is disconnected from downstream USB ports once the crossbar selects the direct-to-hub path, bypassing the bridge, as described in Section IX.B and shown in the Petition:

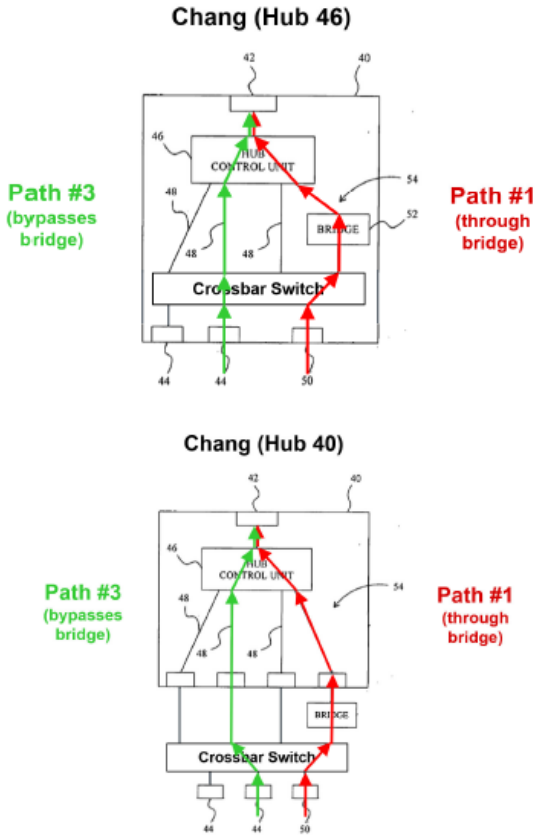

(Petition, 83-85.)

127. Even this hypothetical modification still could not meet claims 19 or 20: the claims require that the routing switch be configured to "connect[] a third communication path … when the second consumer device is connected to said third USB port and is operating in the USB device mode." (EX1003, claim 19.) As recited in the claim, this connection bypasses the bridge and thus prevents the bridge's detection unit from determining "when the second consumer device … is operating in the USB device mode" and providing the crossbar with the control

signals that would be needed to connect the second consumer device as recited by the claims.

128. Claim 20 is not rendered obvious for the additional reason that the proposed combination cannot meet "*simultaneously provid[ing] the [third] communication path*[3] *... without interrupting the first communication path between said first USB port and said second USB port.*" (EX1003, claim 20.) The Petition relies on "asserting the appropriate crossbar lines" to make this connection via the crossbar. (Petition, 86-87.) However, in addition to the defects described in Section IX.B regarding asserting the crossbar lines, the proposed combination cannot provide the third communication without interrupting the first communication path.

129. As described above in Sections VII.B and IX.B, Chang II's detection unit provides control signals in response to determining whether a downstream device is in a host mode or a device mode, in a process described by Fig. 6 of Chang II. But as explained in Chang II, and further by Mr. Welch, that process involves entering a "virtual slave state" and a "virtual host state" to determine the

[3] The claimed second communication path in claim 20 is understood here by both parties to refer to the third communication path recited in claim 19. (*See* Petition, 28.)

mode of the downstream device—interrupting any existing communication path. (EX1015, [0026]-[0027], [0038]-[0045]; EX1013, ¶¶159, 259.) Claim 20 is thus not met for this additional reason.

D. The POSITA Would Not Have Been Motivated to Modify Chang in View of Chang II and the POSITA's Knowledge To Meet The Claim Limitations

130. The Petition's proposed combination additionally fails to render the challenged claims obvious because it relies on hindsight reconstruction—a process employed by Petitioner's expert, *see* EX2021 at 64:24-65:17, EX2021 at 9:15-10:10, but that I understand has long been rejected as impermissible. *Graham v. John Deere Co*., 383 U.S. 1, 36 (1966); *In re Kotzab*, 217 F.3d 1365, 1369 (Fed. Cir. 2000). The Petition proposes a multiple-stage reconstruction: first modifying a prior art USB hub (Chang) with a control circuit from an unrelated reference (Chang II); and then modifying the combination again—transforming components and rewiring internal connections in the process—to insert new electronic switching components (multiplexers and crossbars) cherry-picked from the "POSITA's knowledge." At best, the Petition's results-driven proposal describes how the POSITA *might have* combined the prior art, disregarding how the POSITA as of the priority date *would have been motivated* to combine the prior art with a reasonable expectation of success.

131. As Petitioner's expert admitted, the proposed combination is a product of a claims-first analysis, in which Mr. Welch was provided with various patent claims, and with the Chang and Chang II references; and tasked with determining whether they taught the claims. (EX2021 at 64:24-65:17.) Asked to explain why multiple implementations were proposed but not relied on for claims, Mr. Welch testified: "It was about if a specific claim had language which could be interpreted in order to have one of these rather than the other." (EX2021, 220:11-221:11.) This hindsight analysis improperly fails to consider evidence of how the POSITA would not have been motivated to make the proposed combination; the Petition fails to make a *prima facie* case of obviousness for at least these reasons.

1. The Proposed Combination Would Change the Principles Under Which The Prior Art Was Designed to Operate And Would Render The Prior Art Inoperable For Its Intended Purposes

132. I understand that if a proposed prior art combination would "change the 'basic principles under which the [prior art] was designed to operate,'" or would "render the prior art 'inoperable for its intended purpose,'" then the proposed combination is insufficient to render the claims *prima facie* obvious. *Plas-Pak Indus., Inc. v. Sulzer Mixpac AG*, 600 F. App'x 755, 758 (Fed. Cir. 2015)(internal citations omitted); *see also McGinley v. Franklin Sports, Inc.*, 262 F.3d 1339, 1354 (Fed. Cir. 2001) (inoperative combinations of references "teach

away from the combination and thus cannot serve as predicates for a prima facie case of obviousness").

133. The proposed combination improperly transforms the references, removing key functionality, and cannot support a *prima facie* case. As the Petition repeatedly emphasizes, Chang II repeats two "fundamental concepts": "(1) host/device detection and (2) selecting between two different transmission paths." (Petition, 32 (citing EX1015, [0024], [0046])). These concepts enable Chang II's express "main feature": a control chip that can automatically detect the type of device connected and internally switch to the appropriate transmission path (*i.e.*, the bridge transmission path or the bypass path). (Petition, 32-36, 41; EX1015, [0021].) But as described above, the Petition's proposed combination would be unable to "automatically detect" the type of device once the hub module has been placed into device mode, and to switch to the appropriate transmission path accordingly (*e.g.*, from a device mode back to a host mode).

134. Thus, the proposed combination would render Chang II inoperable for its admitted main feature and intended purpose. And with respect to Chang, limiting the user's ability to connect a consumer device to a USB hub would defeat Chang's intended purpose of providing "a device capable of easily establishing a connection between a computer and another computer." (*See* EX1014, [0002]; EX1013, ¶178.) Moreover, by replacing the existing internal switching

functionality of Chang II with an external switching element (a crossbar), the proposed combination physically bypasses Chang II's bridge circuit, thus changing Chang II's principle of operation: utilizing its switching circuitry to switch to the appropriate transmission path. (Petition, 32-36, 41-42, 45-49; EX1013, ¶¶160-165.)

2. The Proposed Combination Would Impair Usability And Functionality And Undermine USB Goals

135. The proposed combination suffers from additional defects that no POSITA would be motivated to incur. As described above, the proposed combination enters a state from which it cannot return: Chang II's control chip 13 and detection unit 134 are physically disconnected from the downstream USB ports (and any devices connected to those ports), and can no longer perform the process of Chang II's FIG. 6 to determine whether the connected device is in a host mode. Further, Chang II's control chip 13 cannot re-execute this process unless and until the control chip is somehow reconnected to the downstream USB port—an operation wholly unaddressed by the Petition. Additionally, as described above, the proposed combination would be unable to properly detect new external devices connected to the bridge device. This would impair usability and result in confusion, because the proposed combination would respond to user input in a manner inconsistent according to users' expectations—such as by retaining an out-of-date, and perhaps inapplicable, USB mode when a new device is connected

(*e.g.*, a direct-to-hub connection for a newly inserted device in host mode). This concern may be especially critical in the context of vehicle systems, *see, e.g.*, claim 18, in which safety and regulatory matters may be implicated by the failure or unexpected behavior of vehicle control and communication systems. Moreover, the proposed combination would remove existing USB hub functionality, including the ability to connect and reconnect USB devices in host mode or device mode, present in Chang and Chang II. No POSITA would thus be motivated to modify Chang and Chang II in the manner proposed.

136. Furthermore, as described above, the proposed combination limits or disables "hot-swapping" functionality, by removing Chang II's ability to detect newly inserted downstream devices. But as the USB 2.0 specification demonstrates, support for "dynamically attachable and reconfigurable peripherals" was a key design feature of USB. (EX1018, 41.) Similarly, Mr. Welch identified "Support [for] hot plug and unplug" as motivation for the development of USB. (EX1013, ¶51.) The proposed combination's loss of functionality would thus undermine the goals of USB generally, and could defeat the '420 patent's ability to maintain compatibility with the USB standard and other USB devices. (EX1003, 4:3-11..) No POSITA would be motivated to implement this combination.

3. The Proposed Combination Would Introduce Unnecessary Complexity, Redundancy, and Additional Costs

137. The proposed combination is wasteful and inefficient. As described above, the Petition takes existing USB solutions in Chang and Chang II; adds duplicative switching components and new electronic hardware; and disregards existing components, for no reason other than to conjure a hindsight version for the challenged claims. For example, as described above, the Petition proposes modifying Chang's USB hub by replacing its ports with new dual-role ports, and applying the bridge device of Chang II to the existing bridge device of Chang.

138. Even though Chang II already includes, as its "main feature," circuitry for switching between two transmission paths, EX1015 at [0021], the Petition proposes *further* modifying the Chang/Chang II combination to insert additional switching hardware, inside and outside of Chang's hub, *e.g.*:

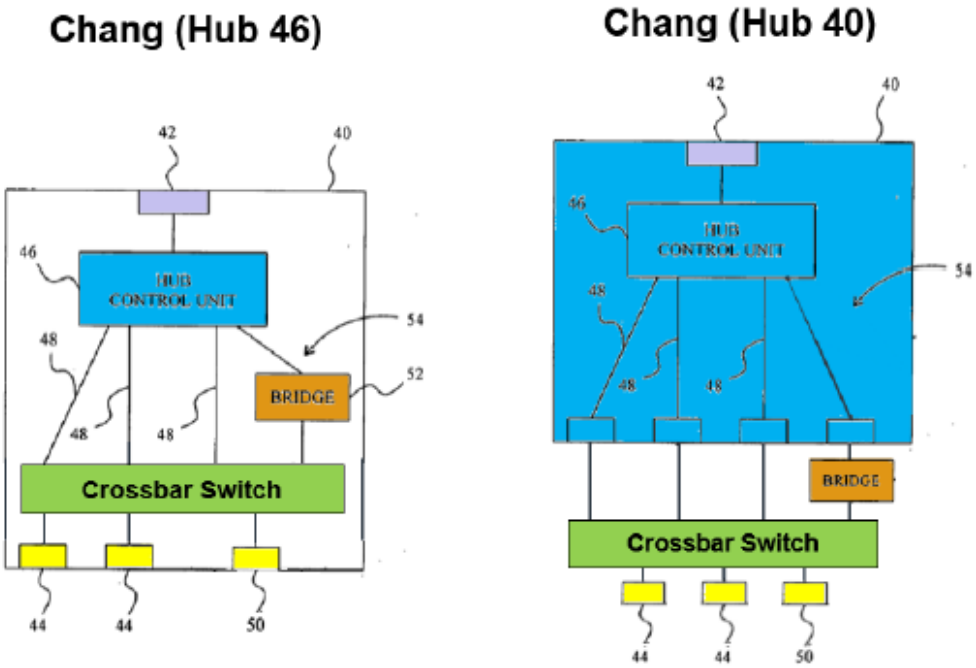

(Petition, 46.)

139. As described above, the proposed combination uses the new switching hardware as a replacement for Chang II's existing switching circuitry. For example, the Petition explains that when the crossbar switches a USB port to a direct-to-hub path, the switch "bypasses the bridge." (Petition, 77-78.) In this combination, the Chang II control chip circuit is left intact, but neither the bypass circuit unit 133, nor the existing switching circuitry connecting to the bypass circuit unit, are utilized:

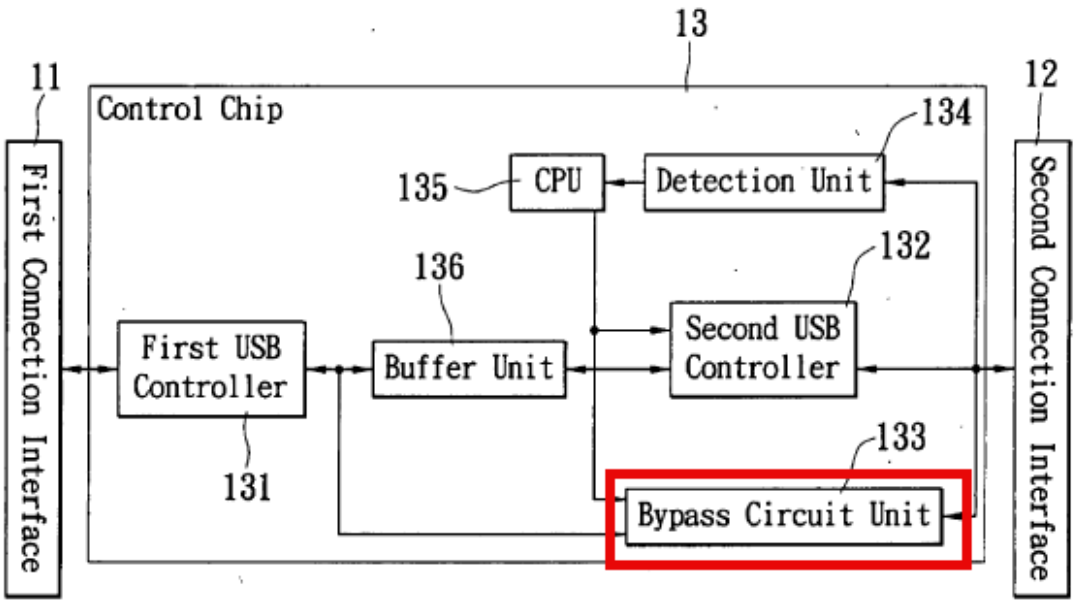

FIG. 5

(EX1015, FIG. 5 (annotated).)

140. Similarly, the proposed combination, at least in some implementations, introduces additional ports (44, 50) to Chang's USB hub, which already includes ports; and extends the circuitry outside Chang's existing hub enclosure 40:

Chang (Hub 40)

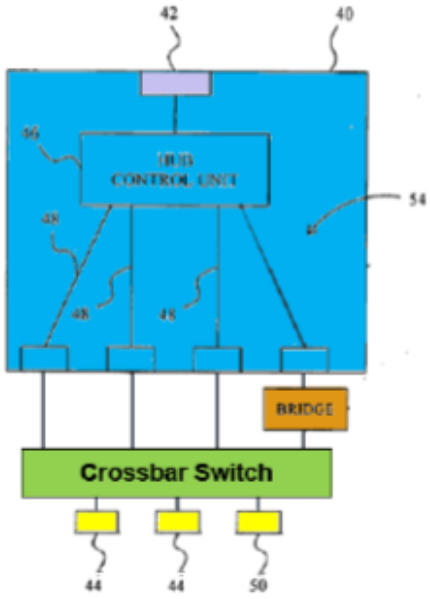

(Petition, 46.)

141. In at least these instances, the proposed combination introduces redundant components with no clear benefit; adds unnecessary complexity; and wastefully leaves existing components unused or underutilized. This inefficiency brings with it real costs, as Petitioner's expert does not dispute (and did not consider in his analysis)—potentially including, for example, expenses associated with manufacturing, purchasing, integrating, and maintaining components; additional bulk and power consumption; unnecessary heat dissipation; and overall complexity. (See EX2021, 235:19-24, 236:5-22, 237:7-16, 240:24-241:18.) No POSITA would be motivated to combine the prior art in a manner that introduces such costs and complexity unnecessarily. Moreover, the proposed combination

would undercut key goals of Chang II: simplicity, efficiency, and convenience. (EX1015, [0010], [0021].) Chang II thus discourages the Petition's proposed combination.

4. The POSITA Would Not Have Any Reasonable Expectation Of Success In Combining The References

142. The Petition additionally fails to establish a *prima facie* case of obviousness because the POSITA would have no reasonable expectation of success in combining the references as proposed by the Petition to achieve the claimed invention. *In re Merck & Co., Inc.*, 800 F.2d 1091, (Fed. Cir. 1986). For the reasons described above, the proposed combination would be incapable of meeting the claim limitations, and would suffer from critical defects in usability, including the loss of detection functionality once a device mode has been entered. The Petition fails to acknowledge these defects, let alone to offer any evidence of how a POSITA would be able to combine the prior art with any reasonable expectation of success.

X. SECONDARY CONSIDERATIONS FURTHER SUPPORT THAT THE CLAIMS ARE NON-OBVIOUS

143. I understand that Courts have provided a number of additional considerations when determining whether a particular combination of references was obvious at the time of the claimed invention. These "objective evidence of nonobviousness includes copying, long felt but unsolved need, failure of others,

commercial success, unexpected results created by the claimed invention, unexpected properties of the claimed invention, licenses showing industry respect for the invention, and skepticism of skilled artisans before the invention." *In re Rouffet*, 149 F.3d 1350, 1355 (Fed. Cir. 1998) (internal citations omitted).

144. I understand further that the Patent Owner has provided such evidence of nonobviousness, including with respect to long-felt but unsolved need; failure of others; skepticism of skilled artisans; commercial success; industry praise; and copying, with respect to Aptiv's commercialization of the '420 patent. In my view, such evidence supports my views, expressed herein, that the challenged claims are not unpatentable.

B. There Are Numerous Objective Indicia Of Non-Obviousness As To The Patented Approach To Providing Persistent Downstream Connectivity

1. Long-felt but unsolved needs

145. In 2010, Apple partnered with BMW to develop a product referred to as "iPod Out" which would allow an iPod or iPhone to connect with an in-car display and provide a standardized, Apple-provided user interface.[4] While iPod

[4] *See e.g.,* https://techcrunch.com/2010/07/13/ios-4s-hidden-ipod-out-feature-brings-iphone-support-to-your-car-without-the-messy-third-party-ui/ (last accessed

Out's GUI only supported streaming music, it laid the groundwork for what would eventually be known as CarPlay. (*Id.*) Both iPod Out and CarPlay require that the iPhone (or iPod) act as a host capable of initiating communication with other devices in the network. (*See e.g.,* EX2029 (addressing the host requirement of iPod Out); EX2041, 91:5-92:1 (Microchip's technical expert at trial testifying to CarPlay's host requirement).

146. From my review of the trial record, I understand that automakers demanded three features for any viable CarPlay solution. (EX2041, 139:16-22 (Microchip's technical expert).) First, the solution must allow for only a single USB data lane to the automotive infotainment system (often called the "head unit"). (*Id.*) Second, the solution must allow a driver to operate CarPlay by plugging their phone into any of the downstream ports; that is, there are no designated CarPlay ports. (*Id.*) Finally, automakers wanted to be able to operate CarPlay while still offering USB data connections on the ports to which the iPhone running CarPlay was not connected. (*Id.*) This final requirement was often referred to in the record as "persistent USB."

Nov. 19, 2024); https://www.edmunds.com/car-technology/a-better-way-than-bluetooth.html (last accessed Nov. 19, 2024).

147. The particular mix of the three requirements was difficult because under a traditional USB network, only one device could be the USB host. Once CarPlay and its host-requirement was announced, USB suppliers generally acknowledged two approaches. The first was a "dual upstream" solution in which the head unit had two separate controllers—one host controller and one OTG controller—and two separate USB networks. (EX2037, 19.) This arrangement maintained downstream data connectivity on non-CarPlay ports, but did not support CarPlay on non-OTG ports and did not satisfy the requirement of a single upstream connection to the head unit. (*Id.*) The second approach was to use OTG or some other role-reversal technology to reverse the direction of the USB connection between the head unit and the consumer device. (EX2037, 20.) When coupled with routing switches, this would support CarPlay on every port and only require a single line to the head unit but would turn all other downstream ports into charging-only ports when CarPlay was in use. (*Id.*) Neither of these solutions, however, could provide all three of the features automakers wanted.

2. Failure of others and skepticism of skilled artisans

148. Despite its experience and manpower, Microchip's engineers repeatedly expressed frustration with automakers' requirements, with one going so far as to say that a solution addressing all three requirements "may be physically outside the capabilities of ANY USB system." (EX2005, 1.) He went on to

explain that "you cannot do CarPlay AND own the other ports with one USB data lane." (EX2005, 2.) "If [automakers] want to have data capability, [they] will have to require 2 USB lanes to the Head Unit. . . . This is a trade off, more cables with data, or one cable with dedicated charging ports." (*Id.*) I understand these statements to express strong skepticism toward any solution that would allow persistent downstream data connectivity without a second upstream data connection to the head unit.

149. Even once Microchip learned of Aptiv's solution, it continued to be skeptical that the solution could work in a reliable way, stating that it was "completely NON-STANDARD USB" that "goes against the primary requirement of USB." (EX2009, 1.) Microchip recognized the complexity of the solution, noting that "[t]hese hosts will be acting independently of each other but will need to maintain USB specifications/timing/time-outs/HID / adequate throughputs as if it was a single bus." (*Id.*) As a result, they believed that it "[c]ould be demo'd but no way it can be guaranteed." (*Id.*) I understand these statements to express that Aptiv's solution was complex and fragile and that Microchip did not believe that it would work in a production vehicle setting.

150. Based on this evidence, it is my opinion that there was significant skepticism in the field regarding the feasibility of a system that would permit

persistent downstream USB connectivity with only a single upstream connection to the automotive head unit.

3. Copying

151. I have reviewed the evidentiary record and concluded that Microchip developed its own products by copying the core components and operation of Aptiv's Boston 2 chip, including its host-to-host bridge and USB routing switches. By copying the functionality of Aptiv's product, Microchip was itself able to offer USB hub chips capable of supporting CarPlay on every port without a second upstream connection to the head unit and without disrupting the USB data connections on the non-CarPlay downstream ports.

152. I have reviewed trial testimony and internal Microchip documents used at trial demonstrating that, at least as early as July 2014, Microchip investigated the operation of what it then referred to as the "Unwired solution." Microchip's VP overseeing its USB and Networking Group, Mitch Obolsky, testified that Microchip's customers requested a solution similar to Aptiv's. (*See e.g.,* EX2040, 233:22-9; EX2033, 1.) He also testified that Microchip began investigating the "Unwired solution" at that time. (EX2040, 234:10-235:6.)

153. In July 2014, Microchip's engineers and sales team put together a presentation explaining Microchip's understanding of the "Unwired solution" at that time. (EX2031.) The information used to put together this presentation

appears to have come from Microchip's customers, both head unit manufacturers and the manufacturers of automotive USB hub components (known in the industry as "breakout boxes" or "BoB"). (*Id.*, 6.) Microchip diagramed its understanding of Aptiv's solution:

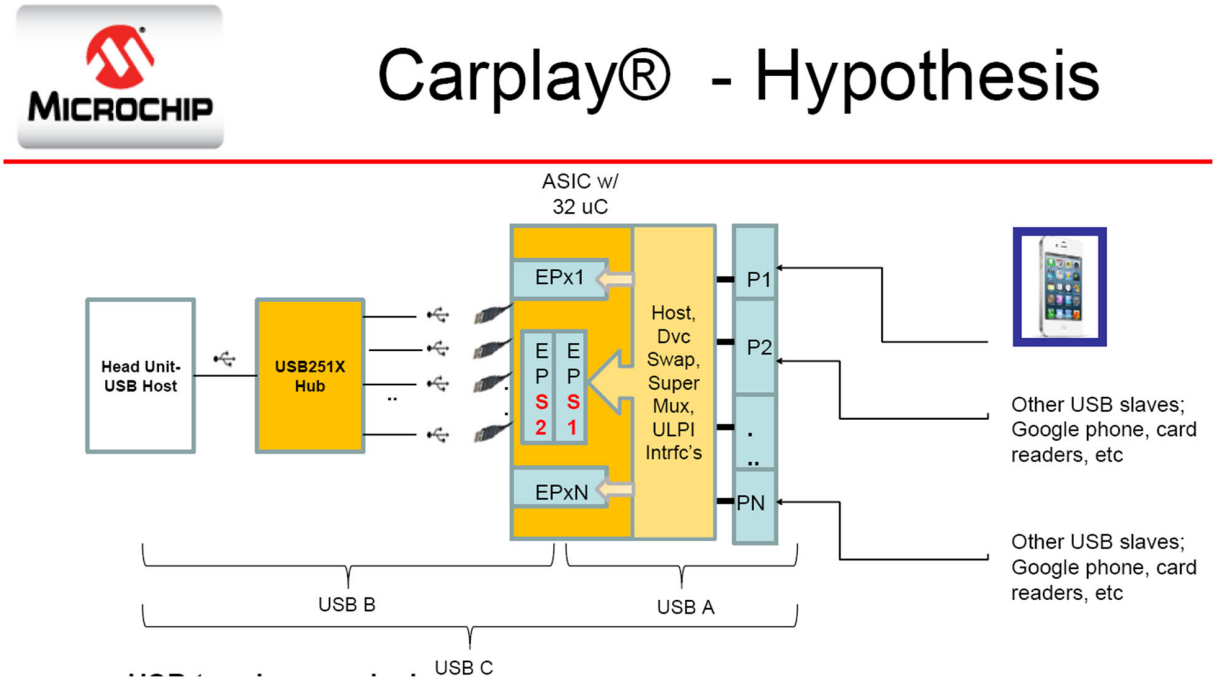

(EX2031, 7.) This diagram shows that Microchip's investigation had garnered an understanding of the basic building blocks of the Aptiv solution, in particular the USB bridge (EPS1 and EPS2) and the USB routing switch (Super Mux).

154. Ultimately, Microchip concluded that Aptiv's solution was the only feasible way to meet all three of automakers' requirements. (EX2040, 240:1-241 ("And as we thought about it, we said well, okay, we can't do it a different way, then what is Unwired doing?").) As a result, Microchip decided to launch its own project to develop a "spoofed" solution (its derogatory description of Aptiv's

approach) at the end of 2014 and early 2015. The diagram of Aptiv's approach was Microchip's starting point for that project. (EX2032.)

155. I have reviewed Microchip's product brief and data sheet for its own multi-host CarPlay solution and concluded that that solution directly mirrors Aptiv's. That diagram, like Aptiv's, includes a host-to-host USB bridge (what Microchip ultimately refers to as a "multi-host endpoint reflector") and a USB routing switch. In the diagram below, the USB bridge is titled "multi-host reflector" and the USB routing switch is comprised of the set of multiplexing switches represented by trapezoids:

FIGURE 2-1: INTERNAL BLOCK DIAGRAM

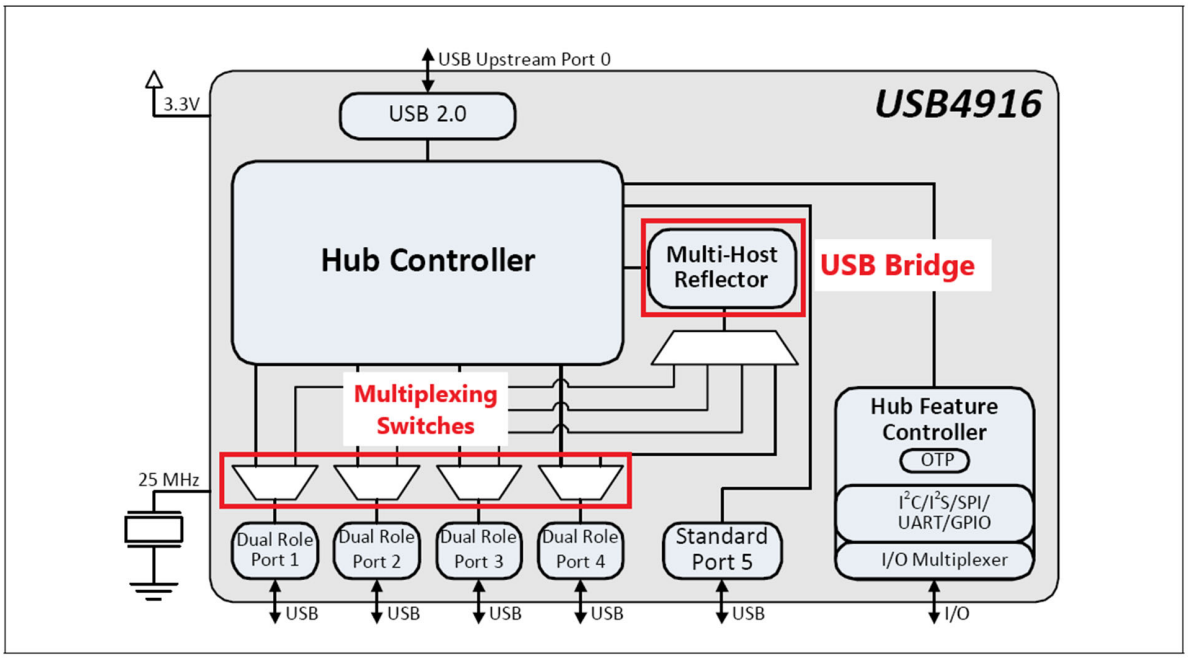

(EX2030, 1, 6 (Annotated).) And in the diagram below, the USB bridge is

sf-6167432

represented by the set of endpoints alongside the "mirror" and the USB routing switch by the block labeled "PMUX":

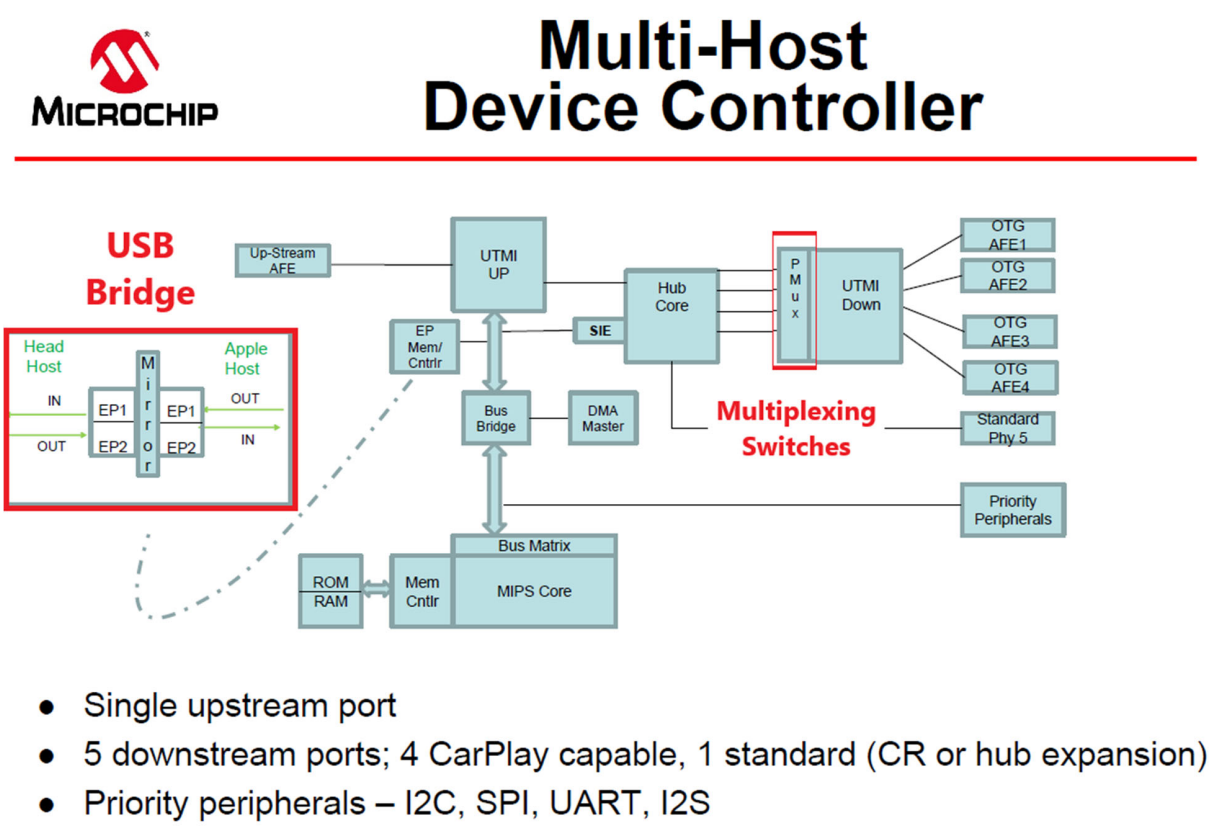

- Single upstream port
- 5 downstream ports; 4 CarPlay capable, 1 standard (CR or hub expansion)
- Priority peripherals – I2C, SPI, UART, I2S

(EX2034, 5 (annotated).)

156. From my review of this documentation, it is my opinion that Microchip's USB491X line of chips directly copies the Aptiv solution and operates in substantially the same manner. Like the Aptiv solution, Microchip's USB491X chips utilize a USB bridge and USB routing switch to allow a user to plug into a downstream port a consumer device operating in USB host mode. When this occurs, the consumer device's connection is routed through the USB bridge to a

hub, then on to an upstream host. When a consumer device plugged into a downstream port is operating in USB device mode, the connection is routed directly to the hub and bypasses the USB bridge. And, in Microchip's USB491X chips, a user can plug in both a USB host and a USB device and both with work as intended. This functionality is enabled by the innovative solution taught in the challenged patents.

157. I have also reviewed an email from one of Microchip's engineers, Mark Bohm, to Mr. Obolsky in which he states that he "received the new GM b.o.b. that contains the Unwired device" and that Microchip can "decap" the chip. (EX2035, 1.) Decapping is the process of etching away the cover from an integrate circuit so that the internal workings of the chip can be studied. I therefore understand Mr. Bohm's email to be an offer to study the actual connections within Aptiv's Boston 2 chip. From his trial testimony, I also understand that this decapping was actually performed, which would have granted Microchip a detailed understanding of the inner workings of Aptiv's solution. (EX2040, 186:22-188:12.)

C. There is a nexus between the secondary considerations and the claims of the '420 patent

158. I understand further that "the evidence of secondary considerations must have a 'nexus' to the claims, *i.e.*, there must be 'a legally and factually sufficient connection' between the evidence and the patented invention." *Fox*

Factory, Inc. v. SRAM, LLC, 944 F.3d 1366, 1373 (Fed. Cir. 2019). Provided below is a chart illustrating, on a per-limitation basis, how Aptiv's Dual Role Hub meets all limitations of at least claims 18, 19, and 20.

159. These claims directly addresses the functionality that drove customer demand, commercial success, and industry praise and that frustrated others in the field. For example, the claims are directed to a USB hub including a first USB port and a second USB port; a central vehicle microcontroller connected to the first USB port; a first consumer device connected to the second USB port; and a USB routing switch connecting a first or second communication path between the first and second USB ports, based on whether the first consumer device is operating in a USB host mode or a USB device mode.

160. In the chart below, I provide an analysis of how Aptiv's dual role hub embodies each limitation of claims 18, 19, and 20 of the '420 Patent.

Challenged Claim	Aptiv Dual Role Hub
18[P]	To the extent the preamble is limiting, the Boston 2 chip in Aptiv's dual role hub is configured to act as part of a communication system:

18[A]	The Boston 2 chip in Aptiv's dual role hub includes a first USB port and a second USB port:

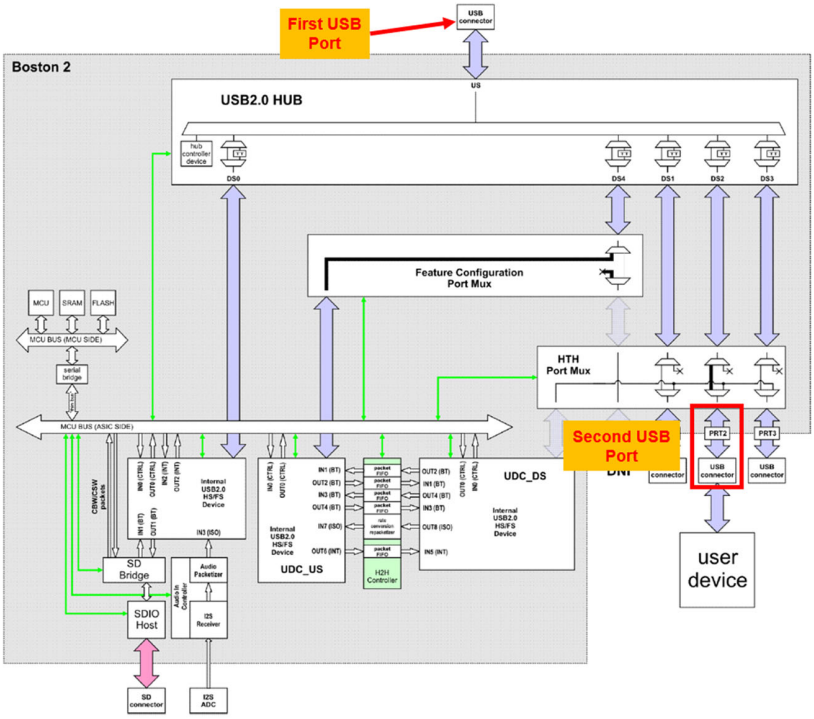

Trial Ex. 6 at Fig. 7-35(a) (Annotated).

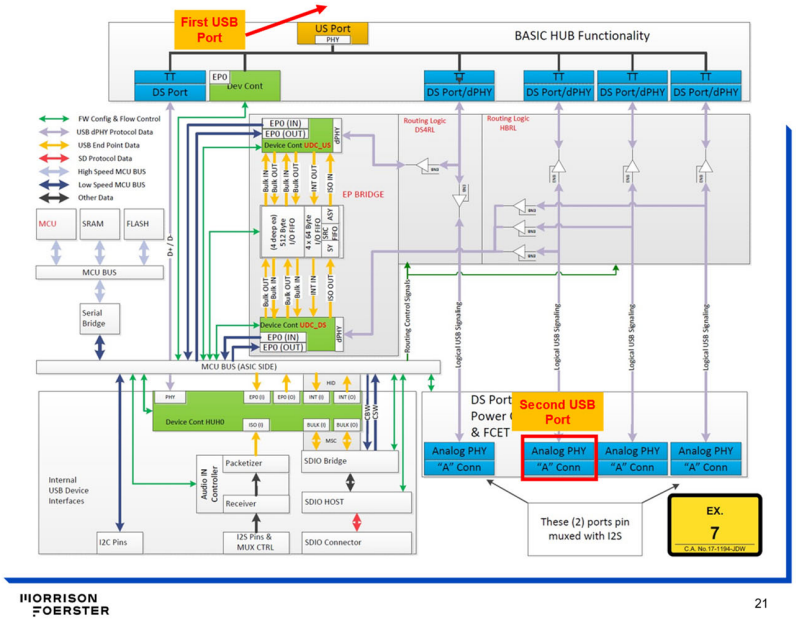

sf-6167432

	Trial Ex. 7 (Annotated).

18[B]	The Boston 2 chip in Aptiv's dual role hub is designed to connect a first, upstream USB port with a central vehicle microcontroller contained in an automotive head unit: 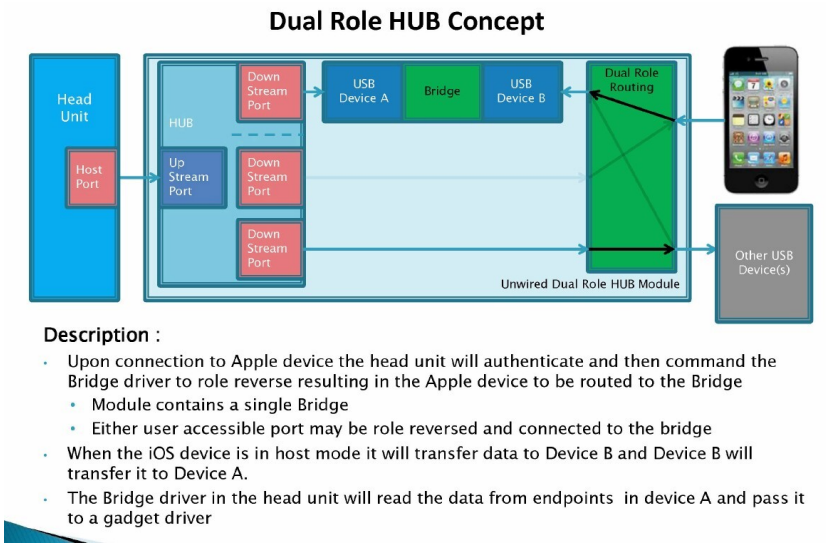 Trial Ex. 5 at 12. 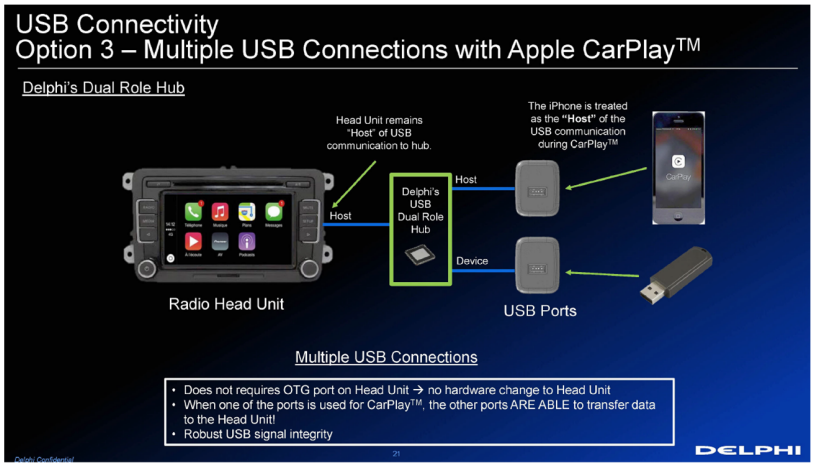 Trial Ex. 18 at 21.

sf-6167432

18[C]	The Boston 2 chip in Aptiv's dual role hub is configured to connect a first consumer device to a second, downstream USB port: 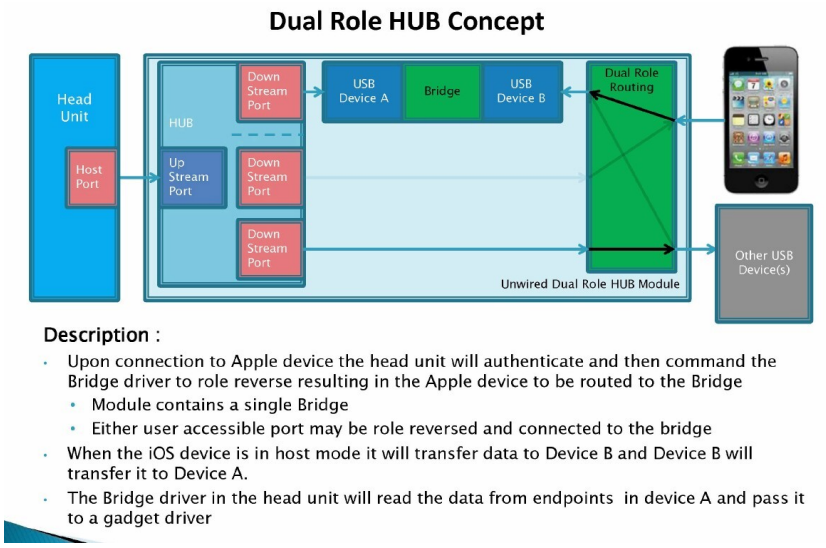 Trial Ex. 5 at 12. 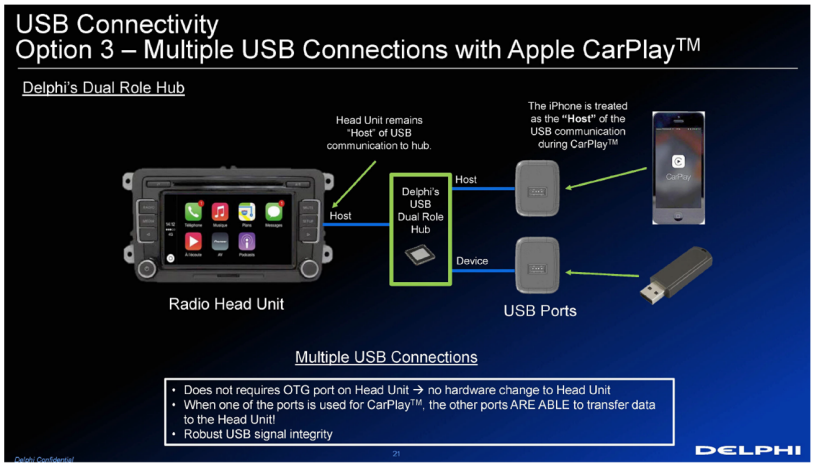 Trial Ex. 18 at 21.

sf-6167432

18[D]	The Boston 2 chip in Aptiv's dual role hub contains a USB host-to-host bridge connected to said first USB port: 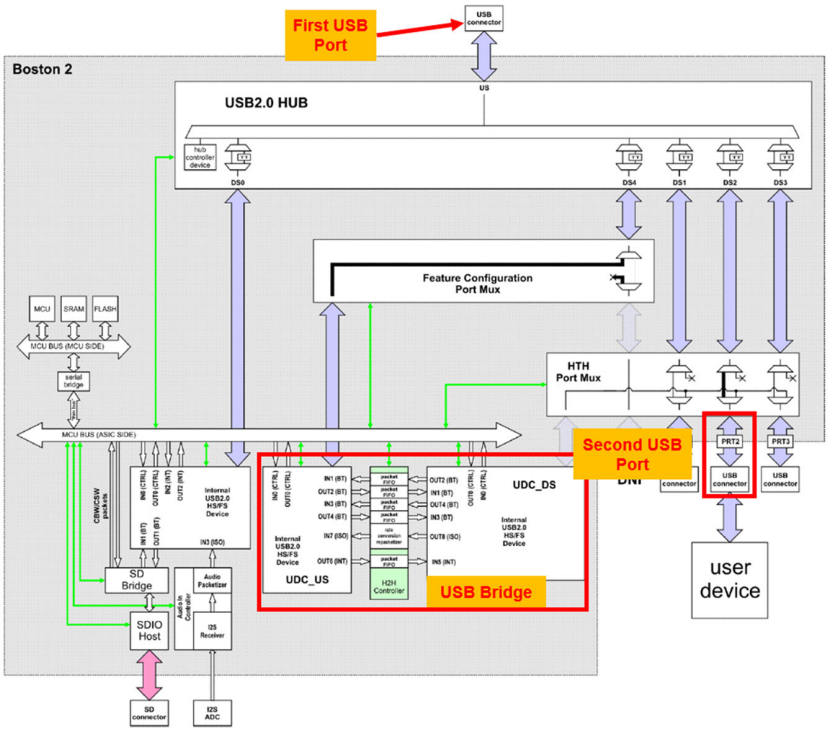 Trial Ex. 6 at Fig. 7-35(a) (Annotated). 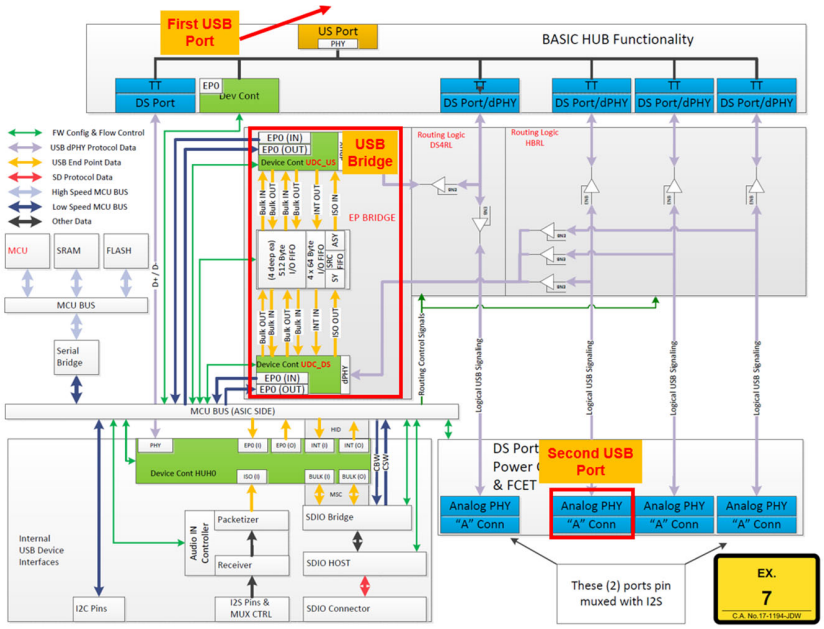

sf-6167432

	Trial Ex. 7 (Annotated).

18[E]	The Boston 2 chip in Aptiv's dual role hub contains a USB routing switch providing a first communication path between said second USB port and said USB host-to-host bridge and a second communication path between said second USB port and said first USB port that bypasses said USB host-to-host bridge: 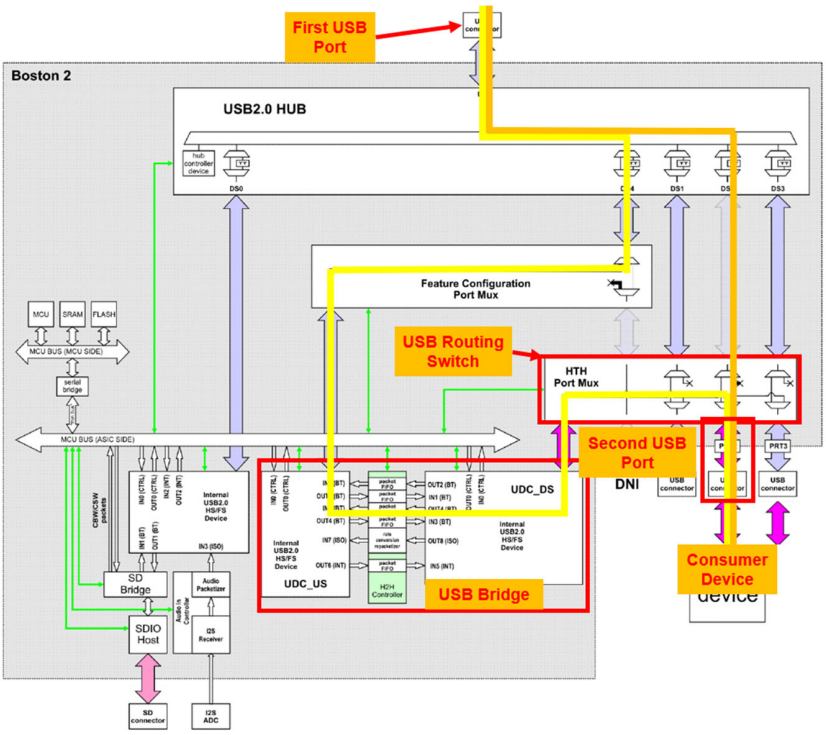 Trial Ex. 6 at Fig. 7-37(c) (Annotated).

sf-6167432

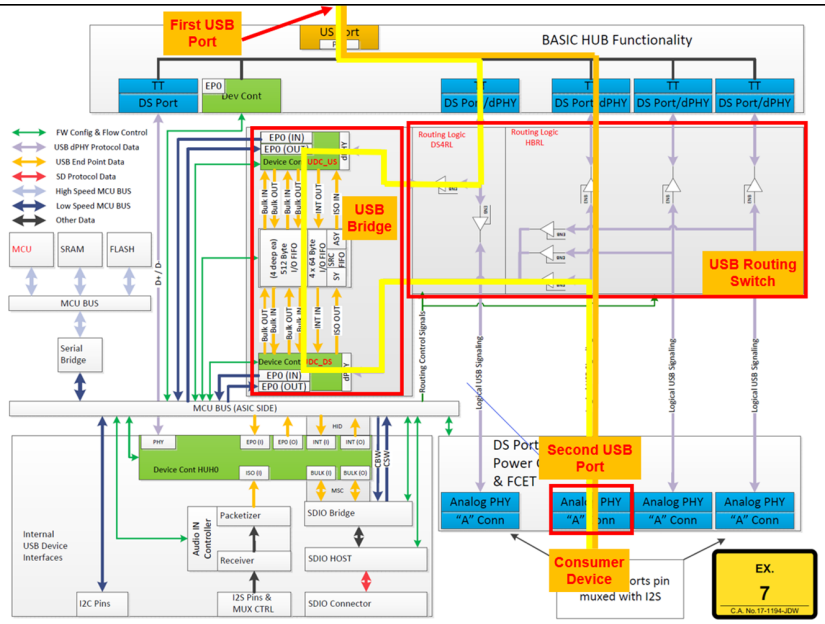

Trial Ex. 7 (Annotated).

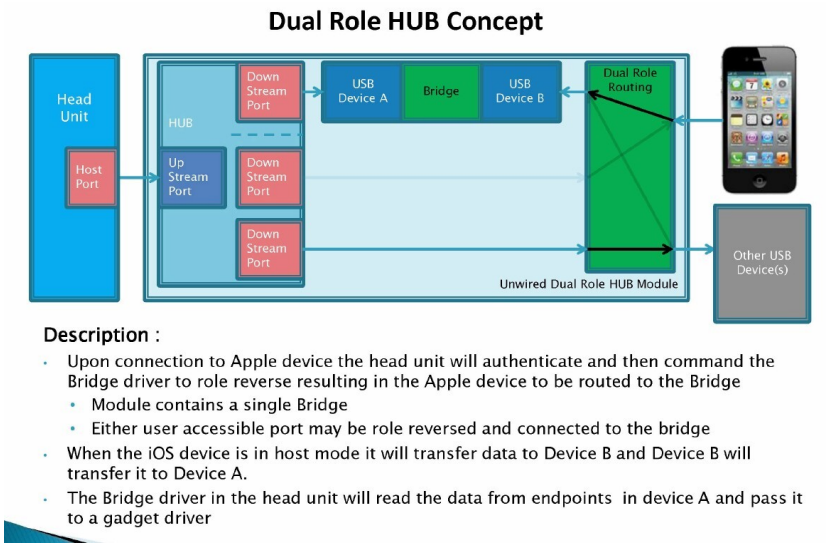

Trial Ex. 5 at 12.

sf-6167432

18[F]	The USB routing switch found in Aptiv's Boston 2 chip is configured to connect said first communication path when the first consumer device is connected to said second USB port and is operating in a USB host mode, thereby providing bidirectional initiation of communication between the USB host and the consumer device: 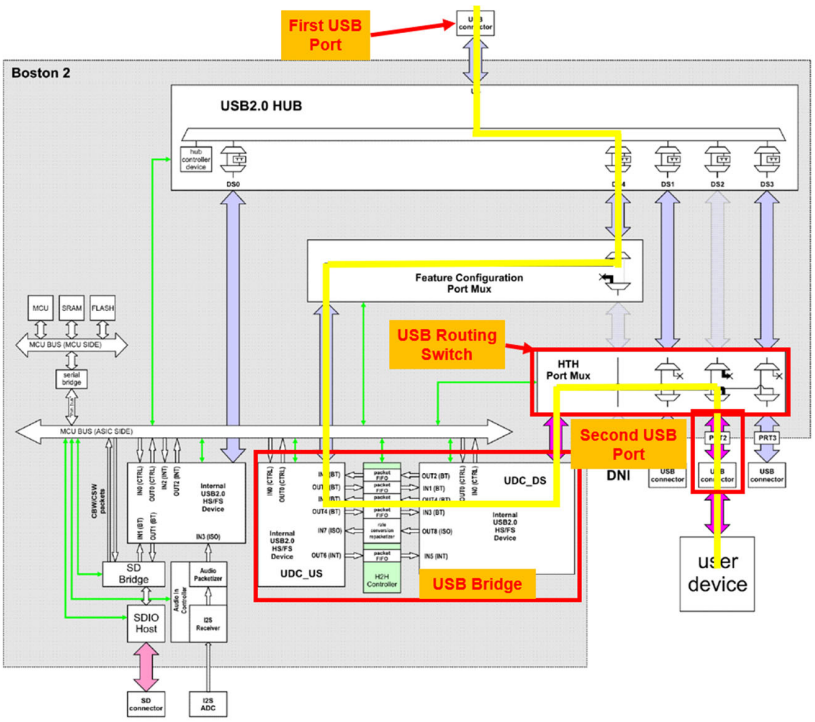 Trial Ex. 6 at Fig. 7-37(c) (Annotated).

sf-6167432

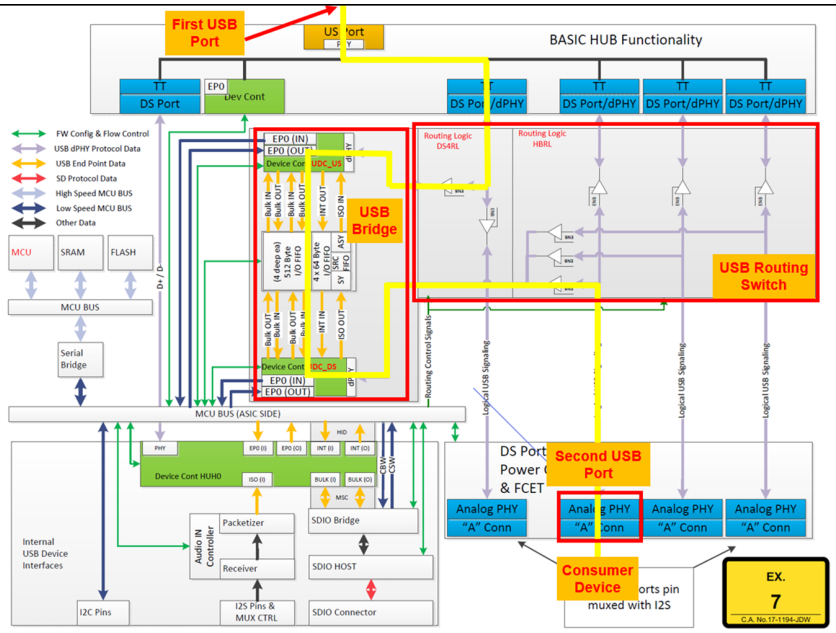

Trial Ex. 7 (Annotated).

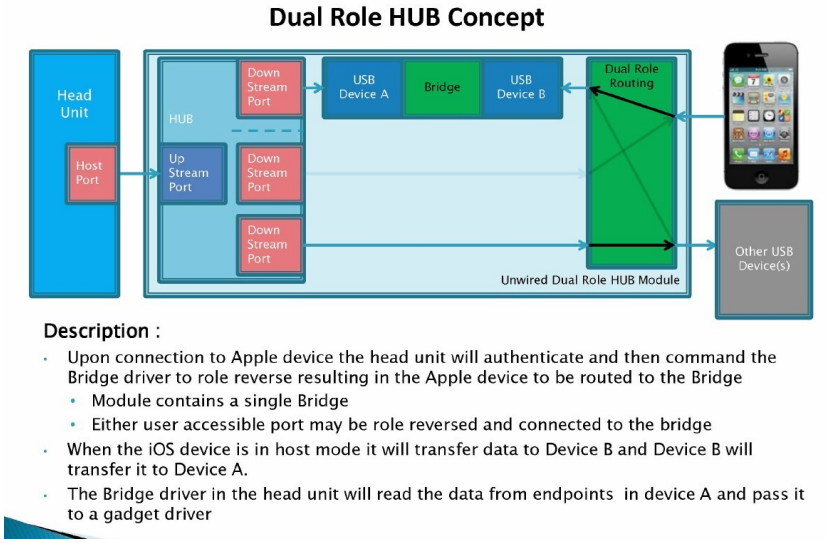

Trial Ex. 5 at 12.

Trial Ex. 6 at 90-93 (describing the port switch sequence, whereby a consumer device operating in USB host mode

	is connected via the USB bridge).

18[G]	The USB routing switch found in Aptiv's Boston 2 chip is configured to connect said second communication path, thereby only responding to communication initiated by the USB host when the first consumer device is connected to said second USB port and is operating in a USB device mode: 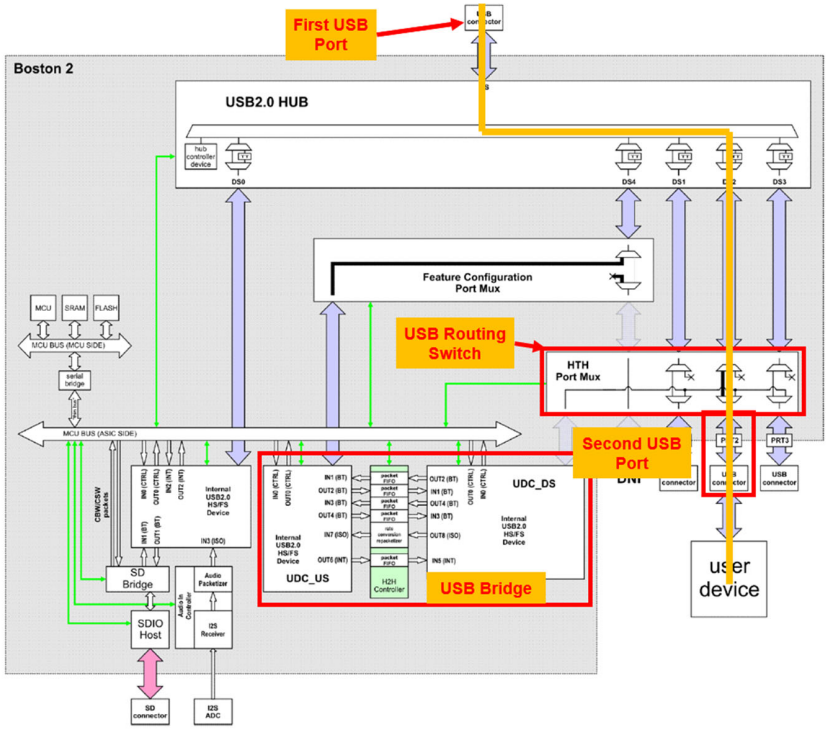 Trial Ex. 6 at Fig. 7-35(a) (Annotated).

sf-6167432

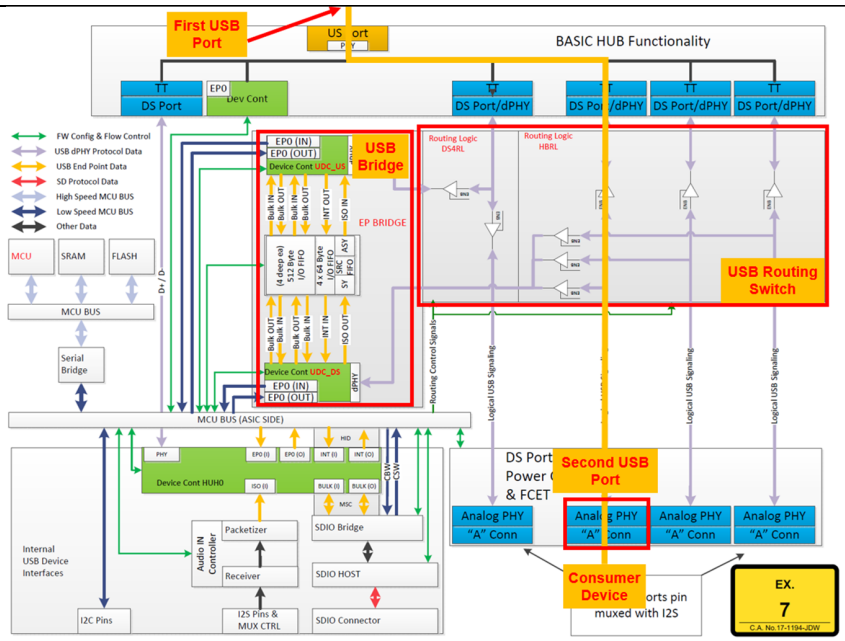

Trial Ex. 7 (Annotated).

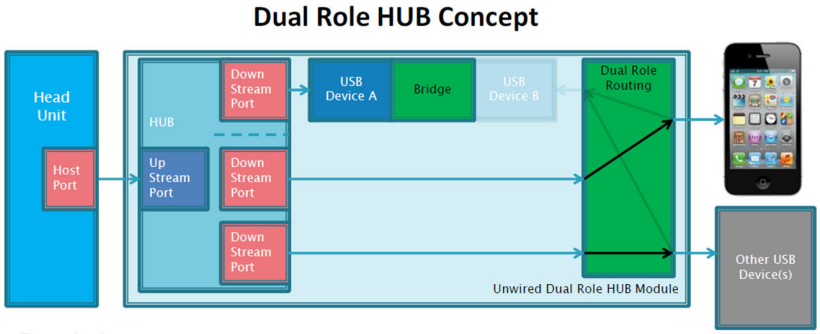

Ex. 5 at 11.

Trial Ex. 6 at 90-93 (describing the port switch sequence, whereby a consumer device operating in USB device mode is routed around the USB bridge).

sf-6167432

19[P]	As addressed previously, the Boston 2 chip contained in Aptiv's dual role hub is designed for use in a communication system that embodies all limitations of claim 18.
19[A]	The Boston 2 chip in Aptiv's dual role hub is configured to allow the connection of a second consumer device to a third USB port: 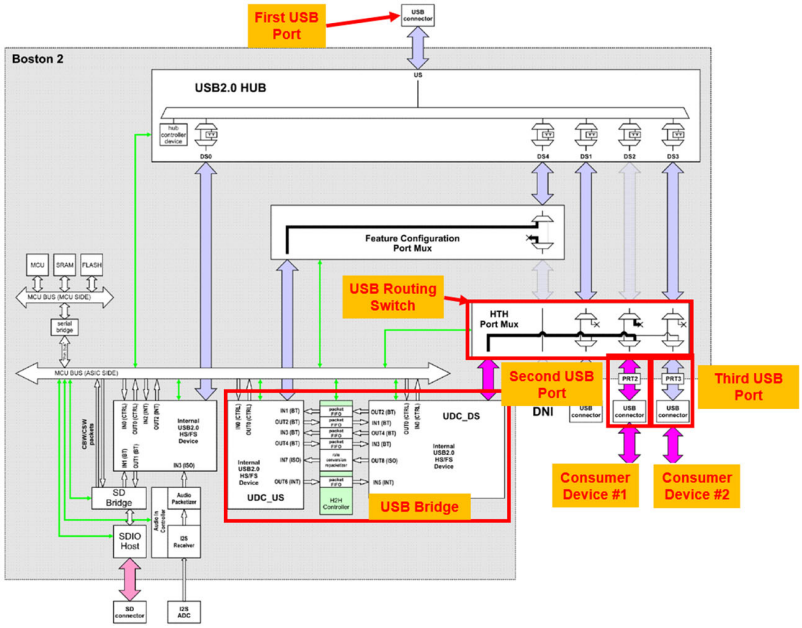 Trial Ex. 6 at Fig. 7-37(c) (Annotated).

sf-6167432

19[B]	The USB routing switch found in Aptiv's Boston 2 chip is configured to further connect a third communication path between said third USB port and said first USB port that bypasses said USB host-to-host bridge, thereby only responding to communication initiated by the USB Host when the second consumer device is connected to said third USB port and is operating in the USB device mode: 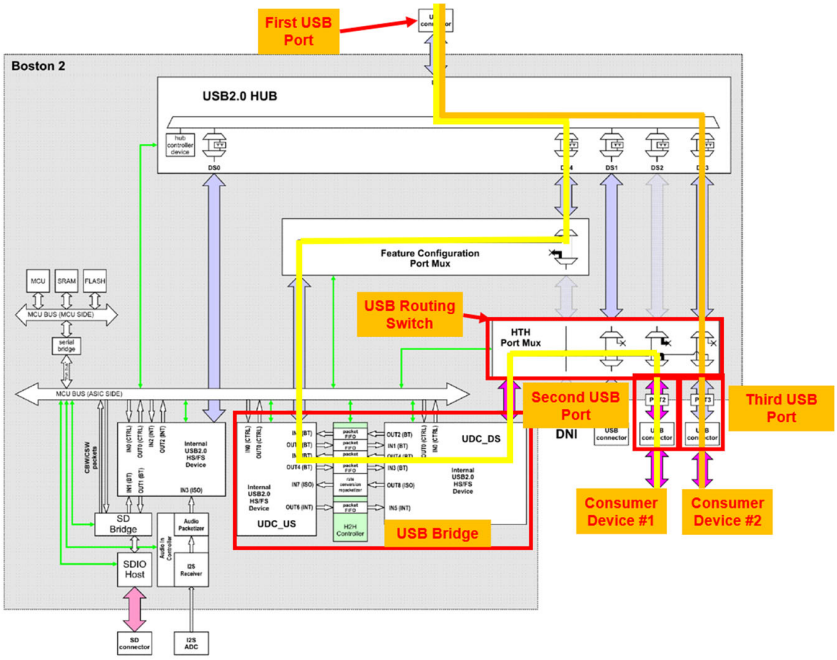 Trial Ex. 6 at Fig. 7-37(c) (Annotated).

sf-6167432

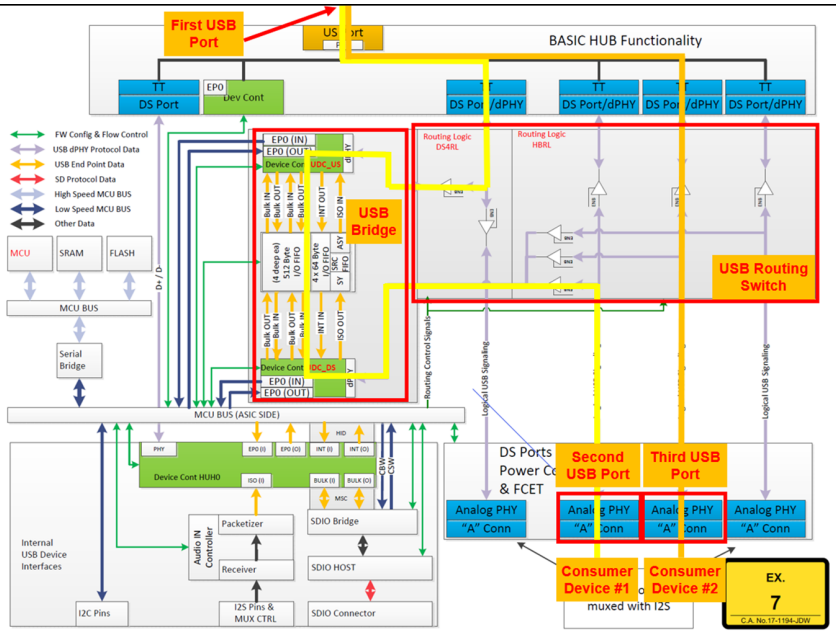

Trial Ex. 7 (Annotated).

sf-6167432

20[P]	As addressed previously, the Boston 2 chip contained in Aptiv's dual role hub is designed for use in a communication system that embodies all limitations of claims 18 and 19.

20[A]	The USB routing switch found in Aptiv's Boston 2 chip is configured to simultaneously provide the second communication path between said first USB port and said third USB port without interrupting the first communication path between said first USB port and said second USB port: 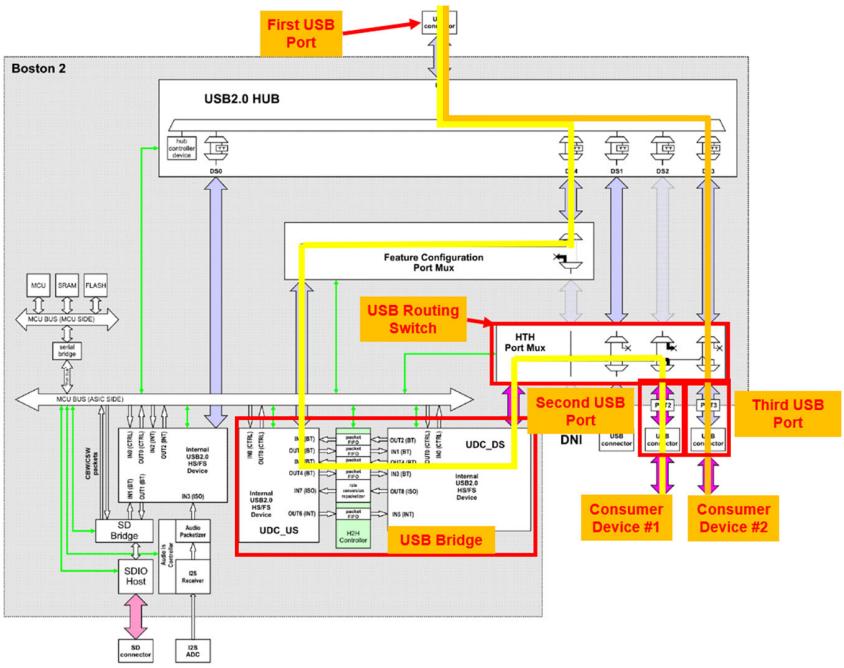 Trial Ex. 6 at Fig. 7-37(c) (Annotated).

sf-6167432

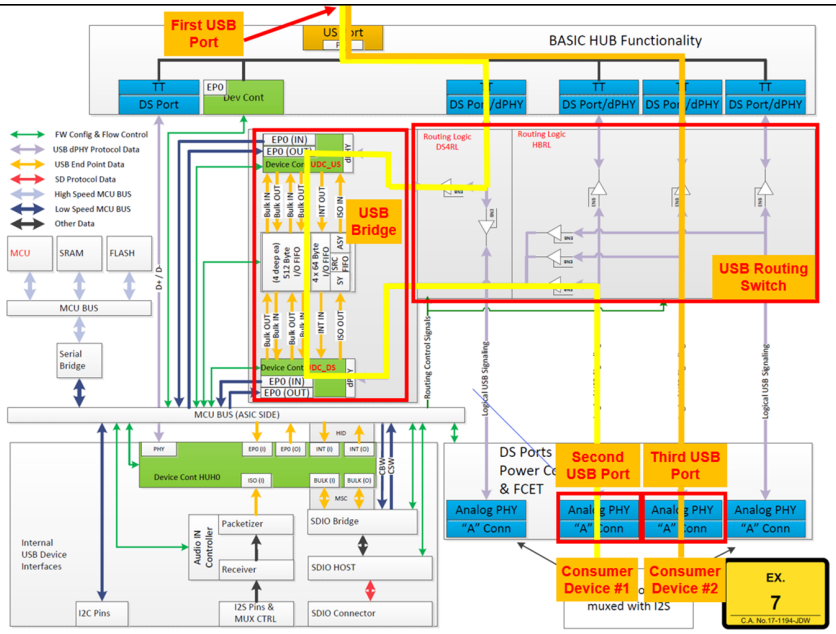

Trial Ex. 7 (Annotated).

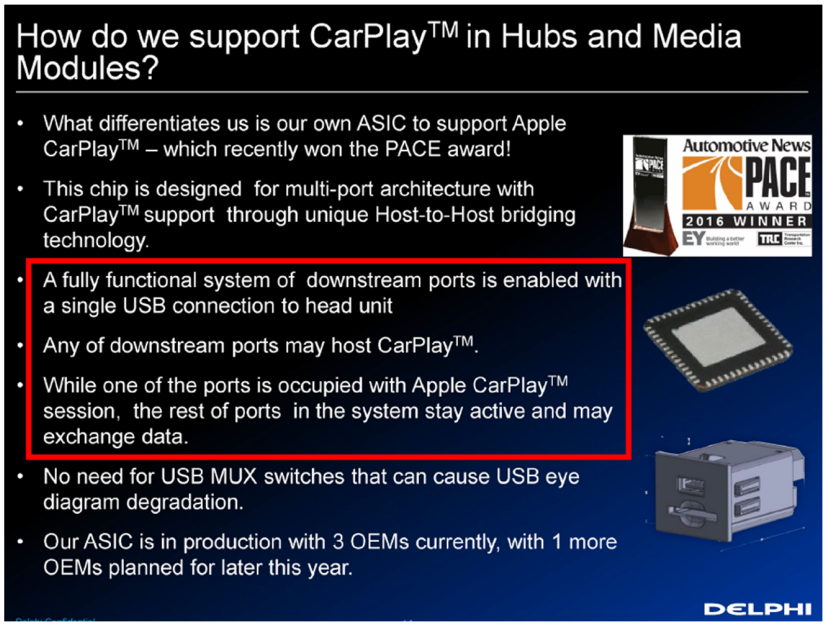

Trial Ex. 124 at 11 (Annotated).

<table>
<tr>
<td></td>
<td>
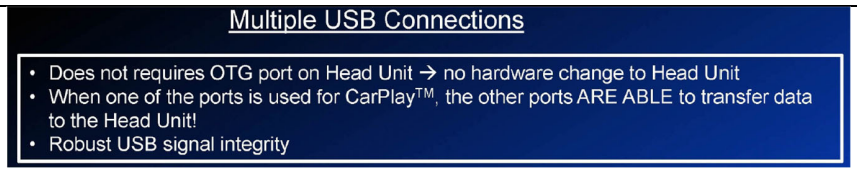

Trial Ex. 18 at 21.

Key System Considerations	Two USB Paths	Port Reversal Hub	Delphi Dual Role Hub
Head Unit used "Host" port (OTG not required)	No	No	Yes
CarPlay™ available on any USB port	No	Yes	Yes
Other hub ports work during CarPlay™	Yes	No	Yes

Trial Ex. 18 at 22.
</td>
</tr>
</table>

sf-6167432

I declare that all statements made herein of my own knowledge are true and that all statements made on information and belief are believed to be true, and that these statements were made with knowledge that willful false statements and the like so made are punishable by fine or imprisonment, or both, under section 1001 of Title 18 of the United States Code.

Dated: November 20, 2024

Henry H. Houh

Dr. Henry H. Houh

sf-6167432