US011781703B2

(12) **United States Patent**
Massey

(10) **Patent No.: US 11,781,703 B2**
(45) **Date of Patent: Oct. 10, 2023**

(54) **ADJUSTABLE MOUNTING SYSTEMS FOR TELEVISIONS**

(71) Applicant: **Manehu Product Alliance, LLC**, Carlsbad, CA (US)

(72) Inventor: **Kurt William Massey**, Mooresville, NC (US)

(73) Assignee: **Manehu Product Alliance, LLC**, Carlsbad, CA (US)

(*) Notice: Subject to any disclaimer, the term of this patent is extended or adjusted under 35 U.S.C. 154(b) by 0 days.

(21) Appl. No.: **17/959,202**

(22) Filed: **Oct. 3, 2022**

(65) **Prior Publication Data**

US 2023/0100126 A1 Mar. 30, 2023

Related U.S. Application Data

(63) Continuation of application No. 16/924,551, filed on Jul. 9, 2020, now Pat. No. 11,460,145, which is a (Continued)

(51) **Int. Cl.**
F16M 11/00 (2006.01)
F16M 11/04 (2006.01)
(Continued)

(52) **U.S. Cl.**
CPC ***F16M 11/04*** (2013.01); ***F16M 11/00*** (2013.01); ***F16M 11/08*** (2013.01); ***F16M 11/10*** (2013.01); ***F16M 11/12*** (2013.01); ***F16M 11/18*** (2013.01); ***F16M 11/2014*** (2013.01); ***F16M 11/2021*** (2013.01); ***F16M 11/2092*** (2013.01); ***F16M 11/24*** (2013.01); ***F16M 13/02*** (2013.01); ***F16M 13/022*** (2013.01); *F16M 2200/024* (2013.01);
(Continued)

(58) **Field of Classification Search**
None
See application file for complete search history.

(56) **References Cited**

U.S. PATENT DOCUMENTS

2,090,439 A 8/1937 George
2,630,854 A 3/1953 Paul
(Continued)

FOREIGN PATENT DOCUMENTS

CA 3073367 A1 3/2019
CN 104424849 A 3/2015
(Continued)

OTHER PUBLICATIONS

ISA, International Search Report and Written Opinion, PCT Patent Application PCT/US2020/066196, dated Apr. 9, 2021, 13 pages.
(Continued)

Primary Examiner — Steven M Marsh
(74) *Attorney, Agent, or Firm* — Perkins Coie LLP

(57) **ABSTRACT**

A mounting system capable of mounting objects to support structures. The mounting system includes a wall mount including a display bracket configured to hold the object, a fixed support bracket coupleable to a vertical support structure, and a linkage assembly. The linkage assembly has a low-profile stowed configuration in which the object is held in a raised position close to the support structure. Tilt adjustment mechanisms are used to adjust the tilt of the display bracket.

36 Claims, 39 Drawing Sheets

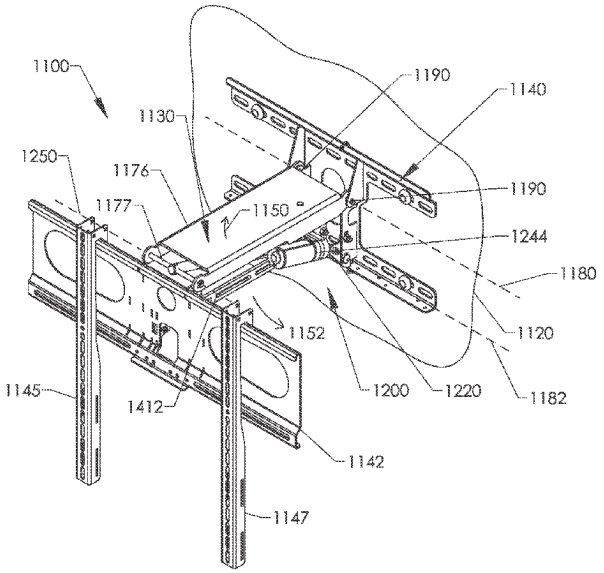

Lumi Ex. 1001
PGR Petition - USP 11,781,703

Related U.S. Application Data

continuation of application No. 16/370,854, filed on Mar. 29, 2019, now abandoned, which is a continuation of application No. 15/489,596, filed on Apr. 17, 2017, now Pat. No. 10,281,080, which is a continuation-in-part of application No. 14/563,842, filed on Dec. 8, 2014, now Pat. No. 9,625,091, and a continuation-in-part of application No. 14/229,780, filed on Mar. 28, 2014, now Pat. No. 9,876,984, which is a continuation of application No. 13/118,297, filed on May 27, 2011, now Pat. No. 8,724,037.

(60) Provisional application No. 61/913,195, filed on Dec. 6, 2013, provisional application No. 61/396,850, filed on Jun. 4, 2010.

(51) **Int. Cl.**

F16M 13/02	(2006.01)
F16M 11/20	(2006.01)
F16M 11/24	(2006.01)
F16M 11/18	(2006.01)
F16M 11/10	(2006.01)
F16M 11/08	(2006.01)
F16M 11/12	(2006.01)

(52) **U.S. Cl.**
CPC . *F16M 2200/044* (2013.01); *F16M 2200/063* (2013.01)

(56) **References Cited**

U.S. PATENT DOCUMENTS

4,076,351	A	2/1978	Wyant
4,082,244	A	4/1978	Groff
4,561,674	A	12/1985	Alessio
4,691,886	A	9/1987	Wendling et al.
5,037,054	A	8/1991	Mcconnell
5,108,063	A	4/1992	Koerber et al.
5,135,191	A	8/1992	Schmuhl
5,224,677	A	7/1993	Close
5,299,993	A	4/1994	Habing
5,499,956	A	3/1996	Habing et al.
5,560,501	A	10/1996	Rupert
5,738,316	A	4/1998	Sweere et al.
5,743,503	A	4/1998	Voeller et al.
5,826,846	A	10/1998	Buccieri et al.
5,842,672	A	12/1998	Sweere et al.
5,857,756	A	1/1999	Fehre
5,876,008	A	3/1999	Sweere et al.
6,065,725	A	5/2000	Mason
6,065,909	A	5/2000	Cook
6,105,909	A	8/2000	Wirth et al.
6,419,196	B1	7/2002	Sweere et al.
6,523,796	B2	2/2003	Abramowsky et al.
6,592,090	B1	7/2003	Li
6,695,274	B1	2/2004	Chiu
6,889,404	B2	5/2005	Lu et al.
6,905,101	B1	6/2005	Dittmer
6,983,917	B2	1/2006	Oddsen
7,014,157	B2	3/2006	Oddsen
7,061,753	B2	6/2006	Michoux et al.
7,252,277	B2	8/2007	Sweere et al.
7,290,744	B2	11/2007	Baldasari
7,300,029	B2	11/2007	Petrick et al.
7,314,200	B2	1/2008	Bally et al.
7,395,996	B2	7/2008	Dittmer
7,398,950	B2	7/2008	Hung
7,448,584	B2	11/2008	Chen et al.
7,546,745	B2	6/2009	Lee et al.
7,546,994	B2	6/2009	Altonji et al.
7,663,868	B1	2/2010	Lam
7,854,415	B2	12/2010	Holbrook et al.
7,866,622	B2	1/2011	Dittmer
7,950,613	B2	5/2011	Anderson et al.
8,006,440	B2	8/2011	Thomas et al.
8,074,950	B2	12/2011	Clary
8,094,438	B2	1/2012	Dittmer et al.
8,333,355	B2	12/2012	Stifal et al.
8,382,052	B1	2/2013	Mathieson et al.
8,724,037	B1	5/2014	Massey
8,740,164	B2	6/2014	Tachibana
8,746,635	B2	6/2014	Kim et al.
8,864,092	B2	10/2014	Newville
8,960,632	B2	2/2015	Fallows
9,004,430	B2	4/2015	Conner
9,016,648	B2	4/2015	Smeenk
9,121,543	B2	9/2015	Dittmer et al.
9,265,346	B1	2/2016	Forney
9,433,293	B2	9/2016	Gross et al.
9,625,091	B1	4/2017	Massey
9,876,984	B2	1/2018	Massey
9,999,557	B2	6/2018	Diaz-flores et al.
10,139,045	B1	11/2018	Keuter
10,257,460	B2	4/2019	Massey
10,277,860	B2	4/2019	Massey
10,281,080	B1	5/2019	Massey
10,659,279	B2	5/2020	Chiu et al.
10,738,941	B2	8/2020	Newville et al.
10,830,580	B2	11/2020	Hodowany
10,859,201	B2	12/2020	Newville
10,935,180	B1	3/2021	Massey
11,033,107	B2	6/2021	Warren
11,178,354	B2	11/2021	Massey
11,287,080	B2	3/2022	Newville et al.
11,346,493	B2	5/2022	Massey
11,346,496	B2	5/2022	Newville
11,406,145	B2	10/2022	Massey
2002/0033436	A1	3/2002	Peng et al.
2002/0043978	A1	4/2002	Mcdonald
2002/0100851	A1	8/2002	Abramowsky et al.
2002/0179791	A1	12/2002	Kwon
2004/0084587	A1	5/2004	Oddsen
2005/0010911	A1	1/2005	Kim et al.
2005/0110911	A1	5/2005	Childrey et al.
2005/0152102	A1	7/2005	Shin
2005/0204645	A1	9/2005	Bachinski et al.
2005/0236543	A1	10/2005	Oneil
2006/0070210	A1	4/2006	Amdahl et al.
2006/0077622	A1	4/2006	Keely et al.
2006/0102819	A1	5/2006	Li
2007/0007412	A1	1/2007	Wang
2007/0023599	A1	2/2007	Fedewa
2007/0030405	A1	2/2007	Childrey et al.
2007/0040084	A1	2/2007	Sturman et al.
2007/0205340	A1	9/2007	Jung
2007/0221807	A1	9/2007	Park
2007/0252056	A1	11/2007	Novin
2008/0078906	A1	4/2008	Hung
2008/0237424	A1	10/2008	Clary
2009/0034178	A1	2/2009	Le
2009/0050757	A1	2/2009	Oh et al.
2009/0050763	A1	2/2009	Dittmer
2009/0108158	A1	4/2009	Kim et al.
2009/0179133	A1	7/2009	Gan et al.
2009/0206221	A1	8/2009	Timm et al.
2009/0212669	A1	8/2009	Robert-reitman et al.
2010/0006725	A1	1/2010	Kim et al.
2010/0091438	A1	4/2010	Dittmer
2010/0149736	A1	6/2010	Dittmer et al.
2010/0155558	A1	6/2010	Zhang et al.
2010/0171013	A1	7/2010	Anderson et al.
2011/0043978	A1	2/2011	Bremmon et al.
2011/0234926	A1	9/2011	Smith
2012/0032062	A1	2/2012	Newville
2012/0033371	A1	2/2012	Pankros et al.
2012/0061543	A1	3/2012	Juan
2012/0167486	A1	7/2012	Lee
2013/0032682	A1*	2/2013	Bell F16M 11/10 248/277.1
2013/0082156	A1*	4/2013	Conner F16M 11/2085 248/281.11
2013/0176667	A1	7/2013	Kulkarni et al.

Lumi Ex. 1001
PGR Petition - USP 11,781,703

(56) **References Cited**

U.S. PATENT DOCUMENTS

2013/0187019	A1	7/2013	Dittmer et al.	
2013/0221174	A1*	8/2013	Sapper	F16M 11/2021 248/278.1
2013/0320163	A1	12/2013	Wong	
2014/0211100	A1	7/2014	Massey	
2015/0277214	A1	10/2015	Schuh	
2016/0120309	A1*	5/2016	Brandt	A47B 81/062 361/679.01
2017/0105529	A1	4/2017	Kozlowski et al.	
2018/0054156	A1	2/2018	Lokey	
2018/0131895	A1	5/2018	Massey	
2018/0310459	A1	11/2018	Blunier	
2018/0352189	A1	12/2018	Massey	
2019/0072231	A1	3/2019	Newville et al.	
2019/0309895	A1	10/2019	Newville	
2019/0335135	A1	10/2019	Massey	
2020/0049304	A1	2/2020	Hung	
2020/0355319	A1	11/2020	Newville et al.	
2020/0408353	A1	12/2020	Massey	
2021/0190259	A1	6/2021	Newville	
2022/0150441	A1	5/2022	Massey	
2022/0252209	A1	8/2022	Newville	

FOREIGN PATENT DOCUMENTS

CN	109605346	A	4/2019
CN	111031859	A	4/2020
GB	2222939	A	3/1990
GB	2579974	A	7/2020
KR	100705069	B1	4/2007
KR	20070081731	A	8/2007
WO	2019043670	A1	3/2019
WO	2019183822	A1	10/2019
WO	2021127552	A1	6/2021

OTHER PUBLICATIONS

ISA, International Search Report and Written Opinion, PCT Patent Application PCT/US2021/017141, dated Jun. 1, 2021, 11 pages.

ISA, International Search Report and Written Opinion, PCT Patent Application PCT/US2021/017492, dated Jun. 3, 2021, 17 pages.

ISA, International Preliminary Report on Patentability for International Application No. PCT/IB2018/57591. dated Mar. 10, 2020, 7 pages.

ISA, International Search Report and Written Opinion for International Application No. PCT/IB2018/57591. dated Jan. 28, 2019, 8 pages.

MantelMount MM750 Pro Above Fireplace Pull Down TV Mount, accessed Dec. 3, 2020 from https://www.mantelmount.com/products/mm750-pro-pull-down-tv-mount, 6 pages.

MantelMount RB100 Recess Box—MantelMount Pull Down TV Mount Accessory, accessed Dec. 3, 2020 from https://www.mantelmount.com/products/mantelmount-rb100-recess-box, 6 pages.

* cited by examiner

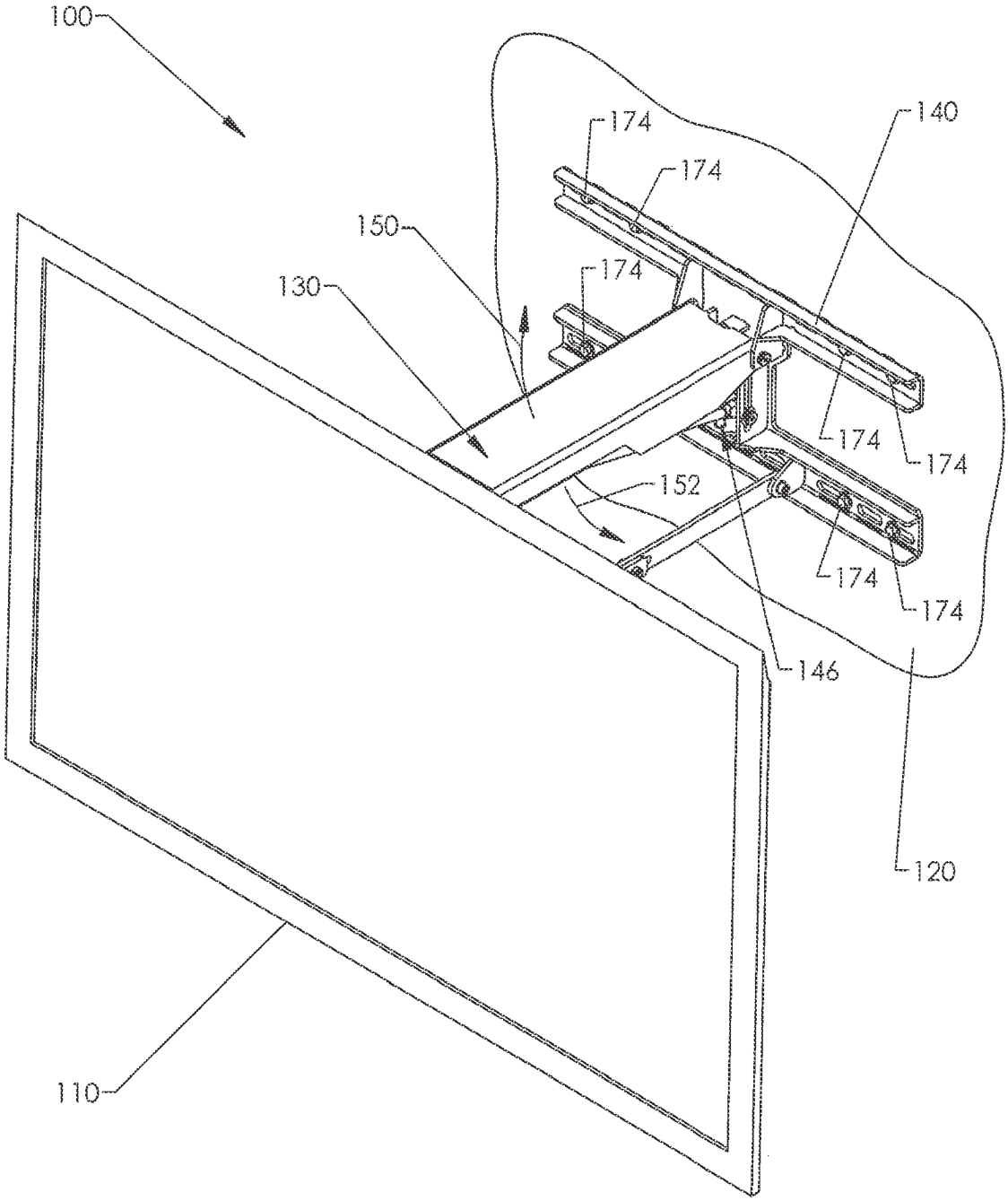

FIG. 1

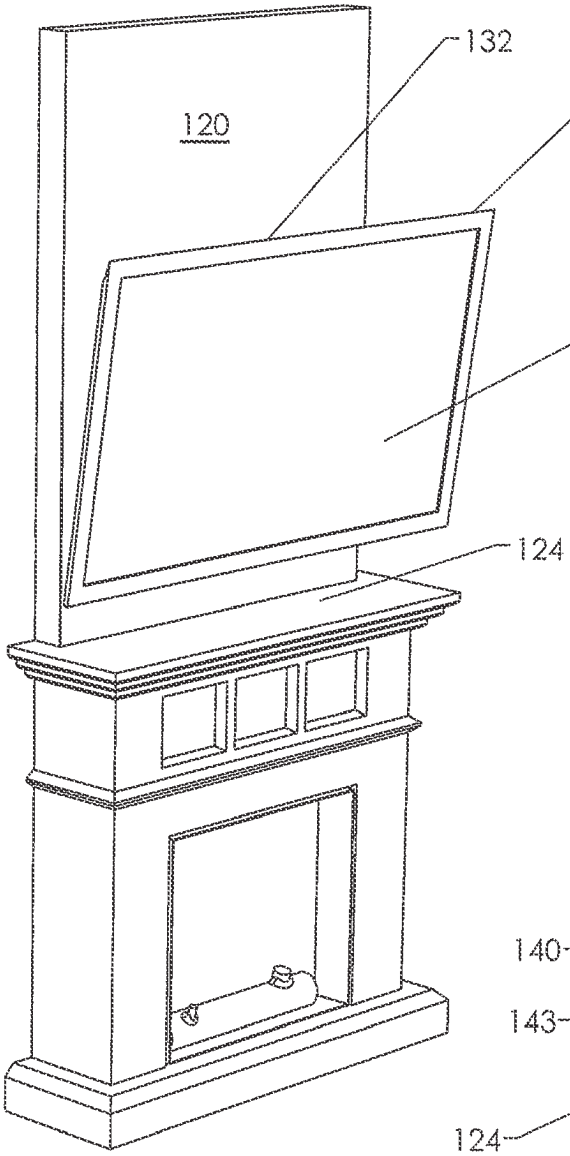

FIG. 2

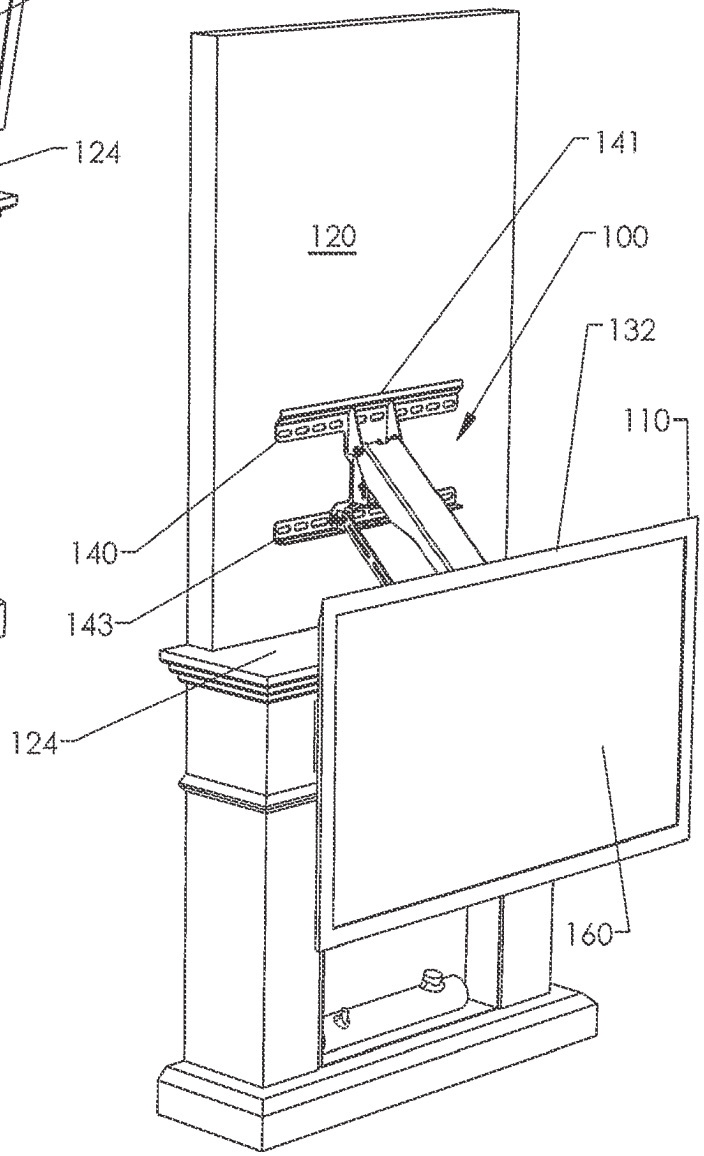

FIG. 3

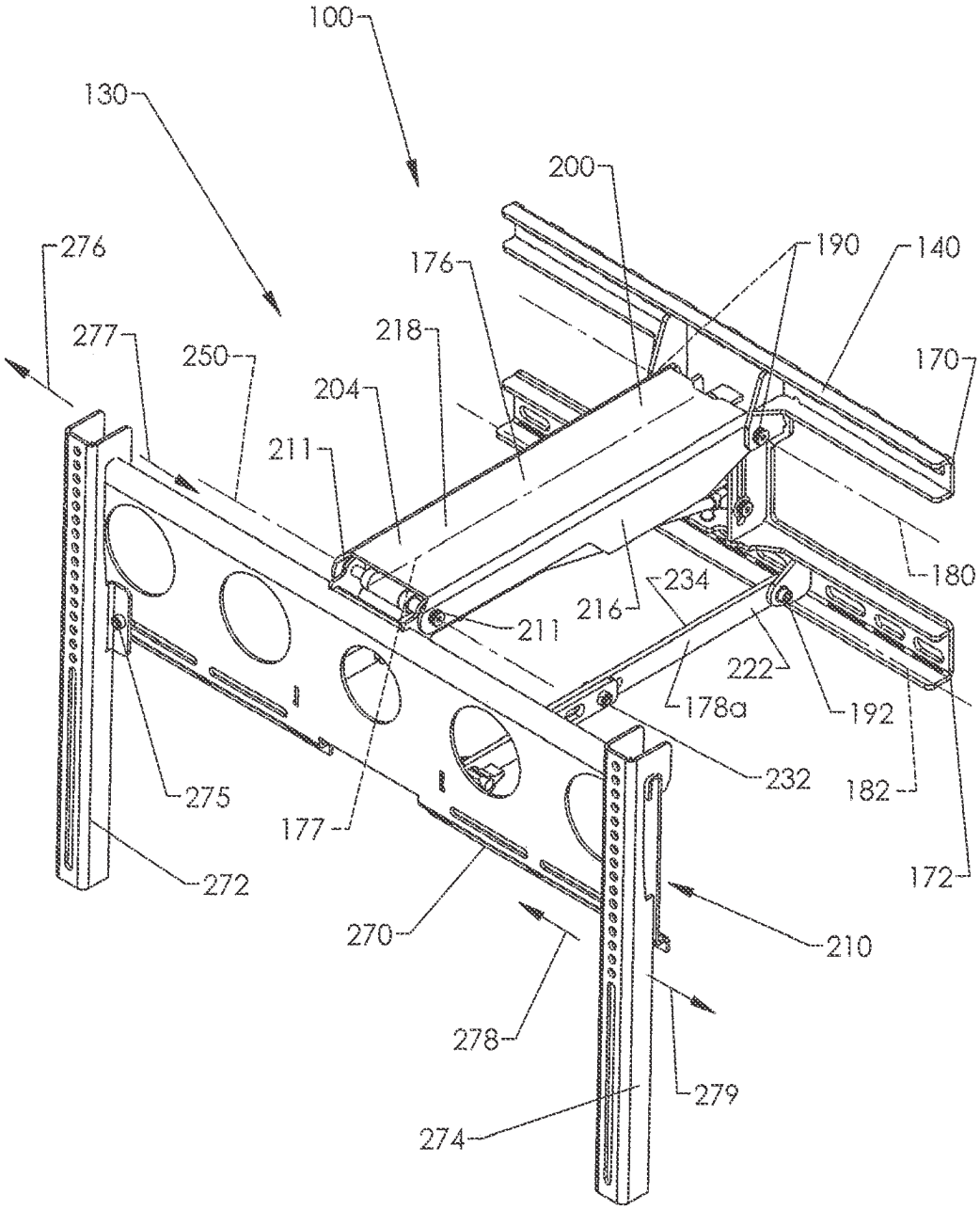
100
130
200
276
176
190
140
277
250
218
170
204
211
180
234
216
211
222
178a
192
232
182
275
177
172
272
270
210
278
279
274

FIG. 4

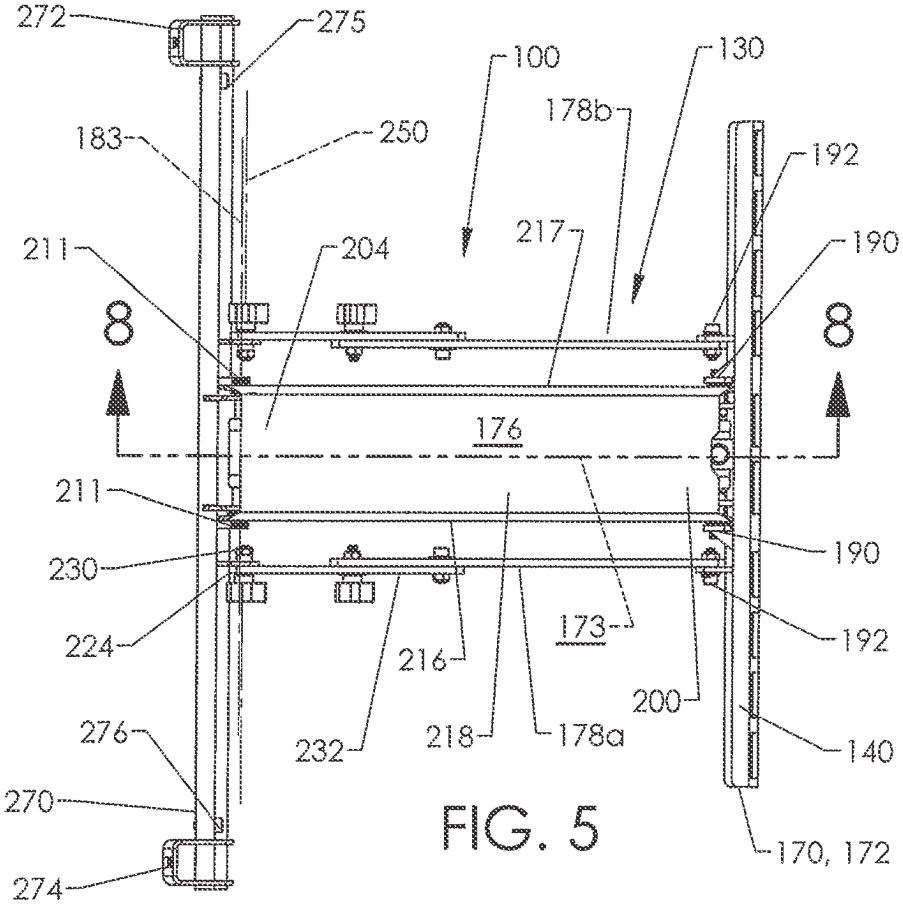
272
275
100
130
178b
183
250
192
211
204
217
190
8
8
176
211
190
230
224
173
192
216
200
276
232
218
178a
140
270
170, 172
274

FIG. 5

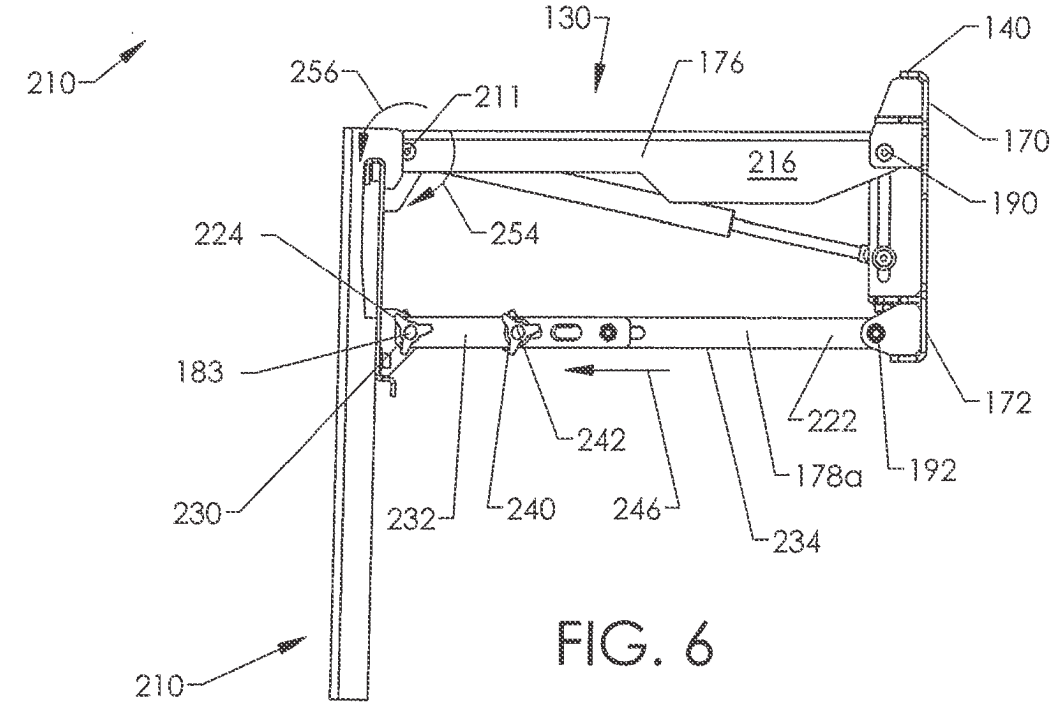
130
140
210
256
176
211
170
216
190
224
254
183
172
222
242
178a
192
230
232
240
246
234
210

FIG. 6

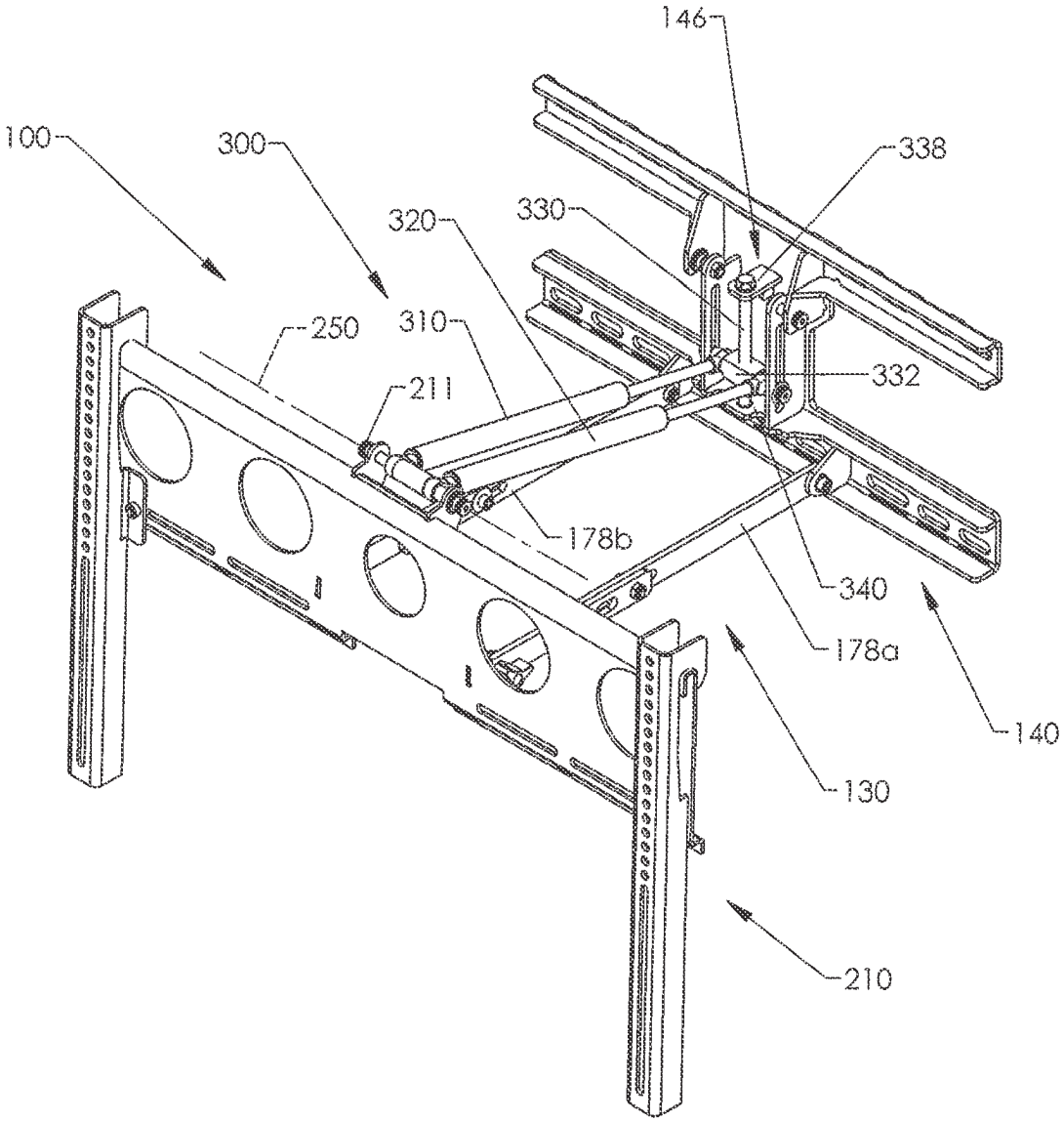
146
100
300
338
320
330
250
310
332
211
178b
340
178a
140
130
210

FIG. 7

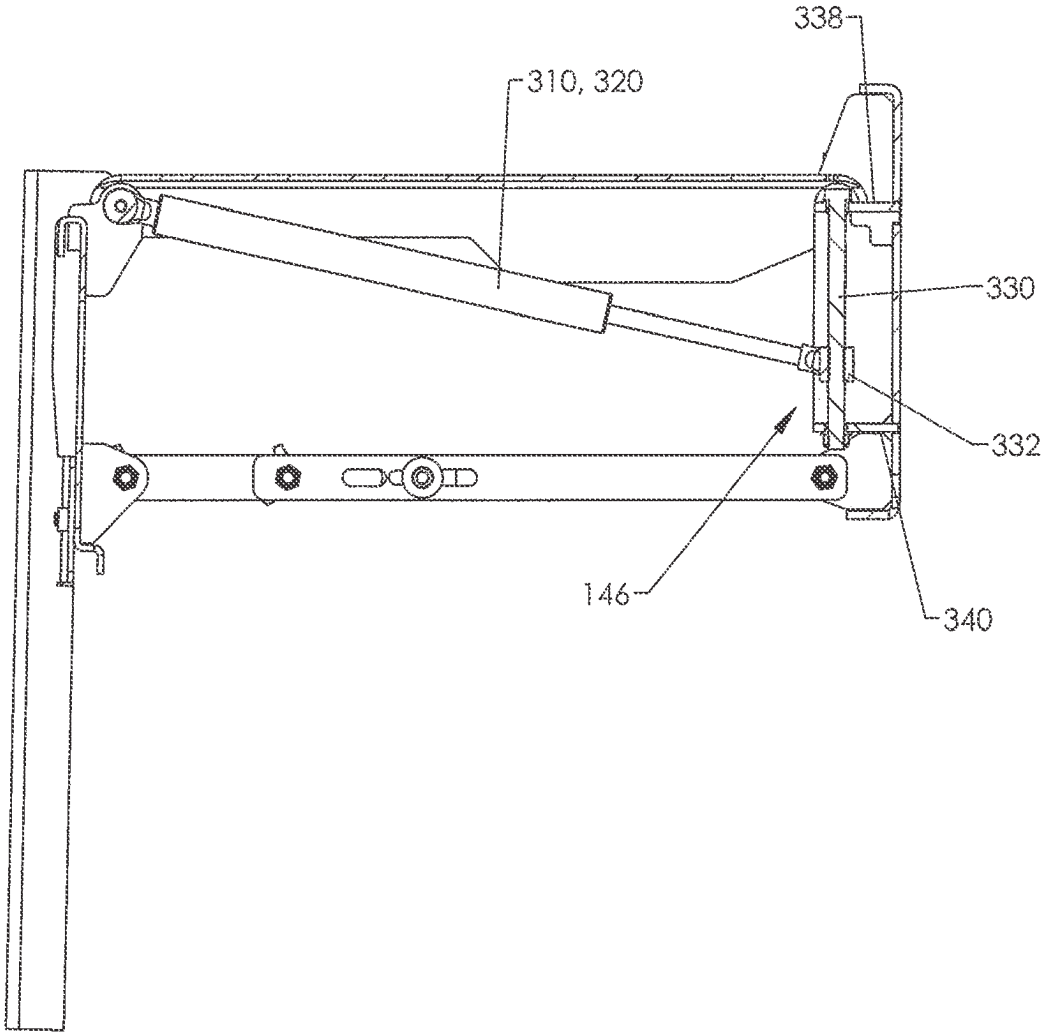

FIG. 8

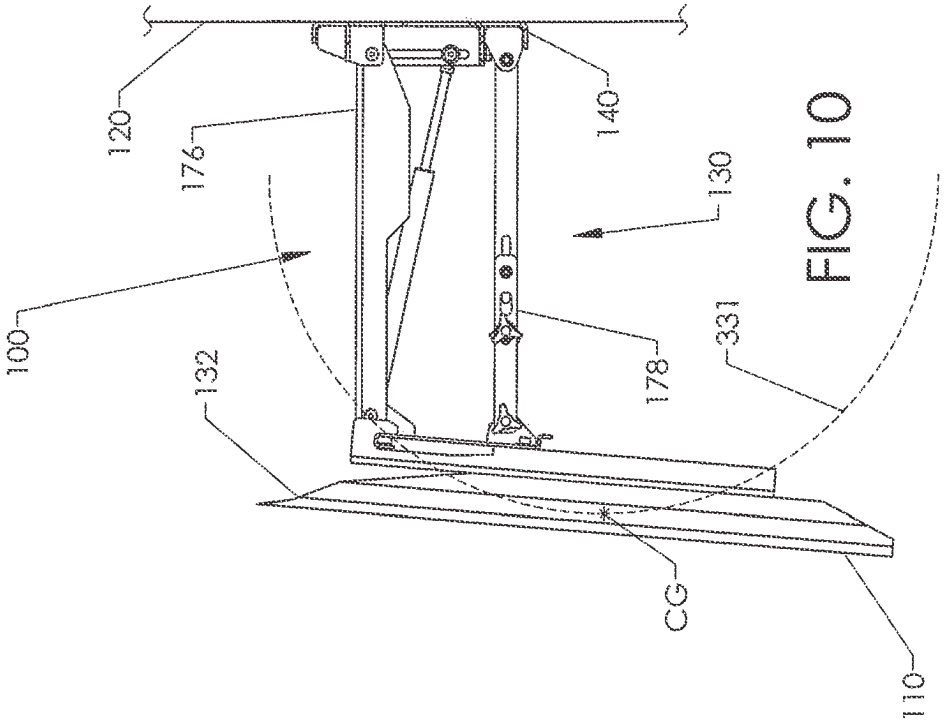
100
120
176
132
130
140
178
331
CG
110

FIG. 10

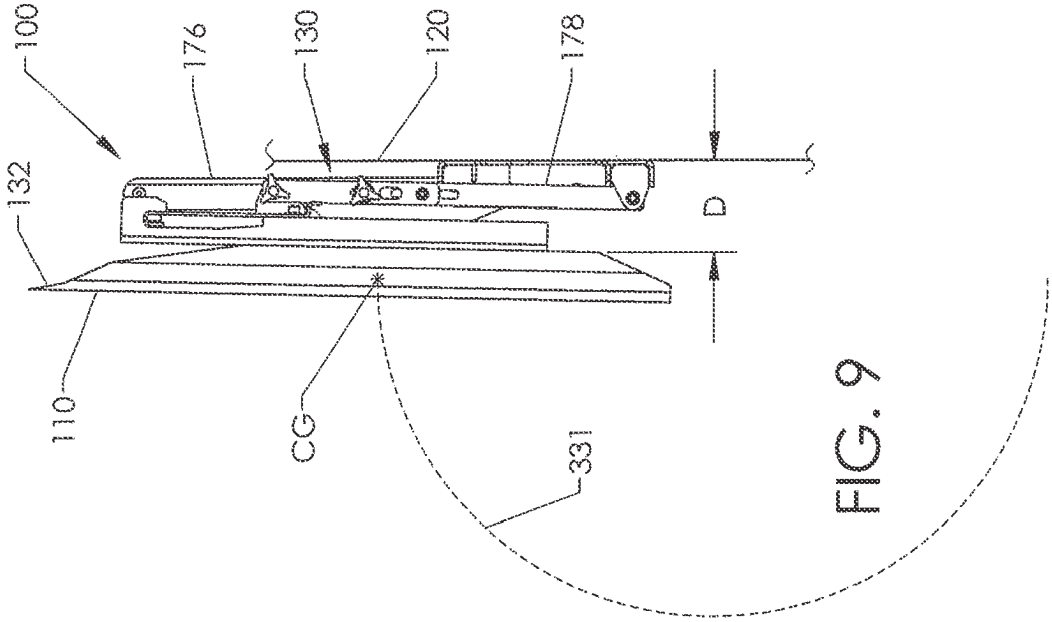
100
176
130
120
178
132
110
CG
331
D

FIG. 9

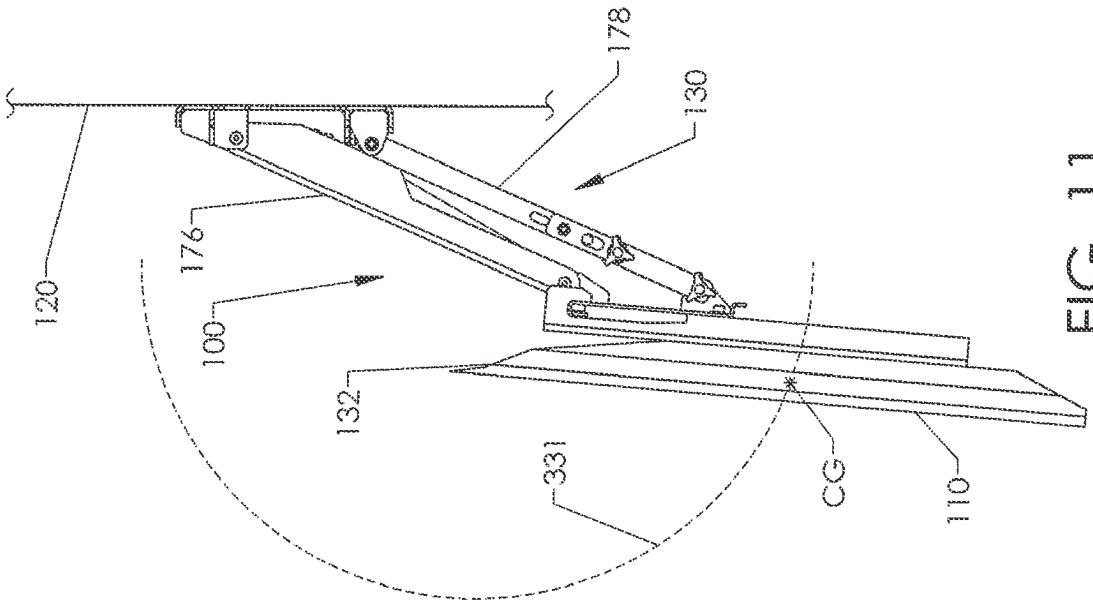

FIG. 11

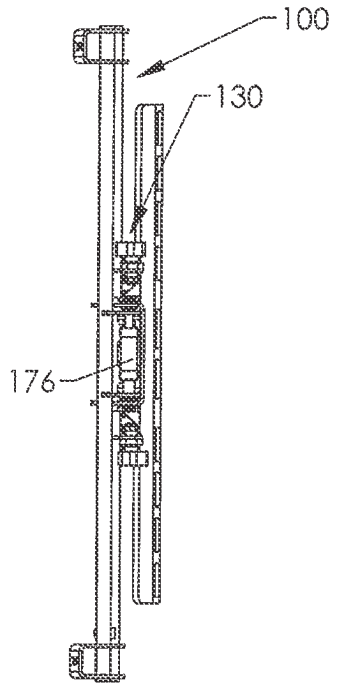

FIG. 12

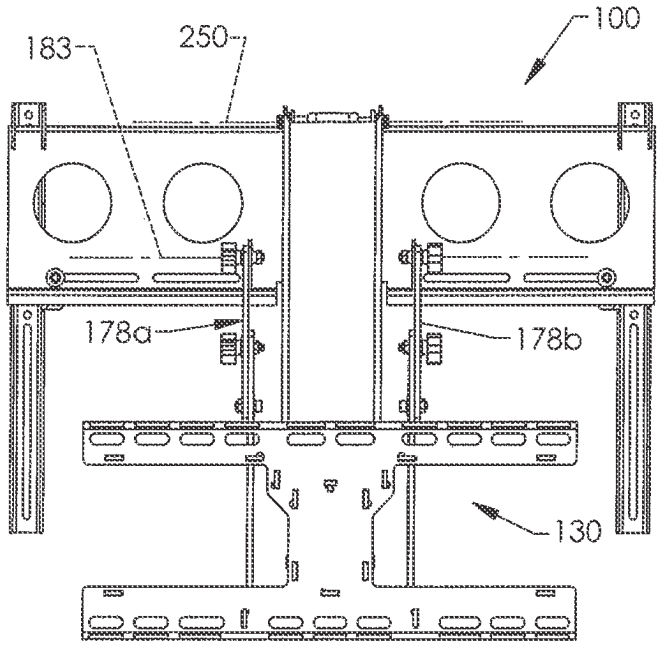

FIG. 14

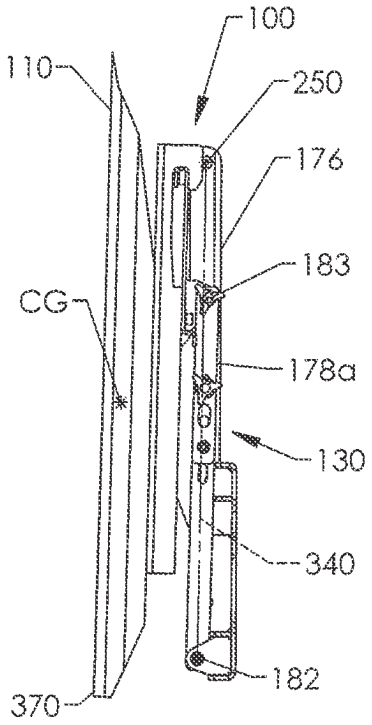

FIG. 13

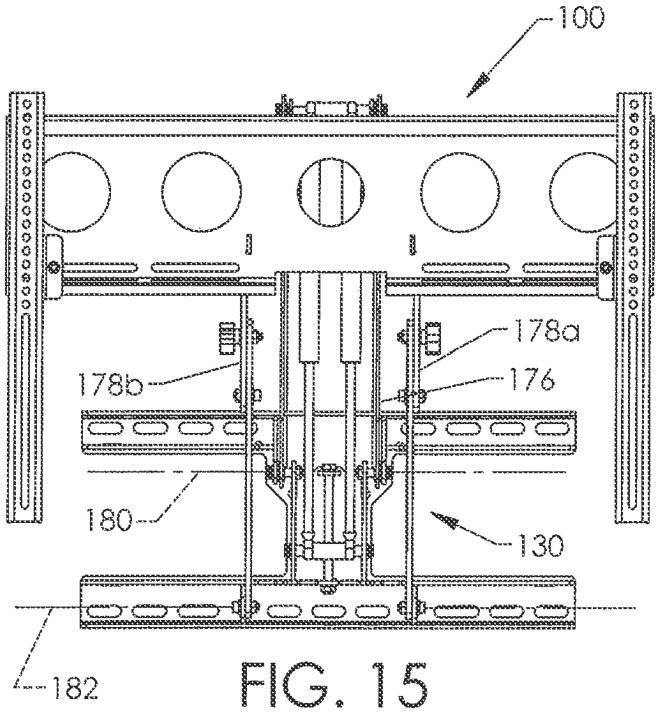

FIG. 15

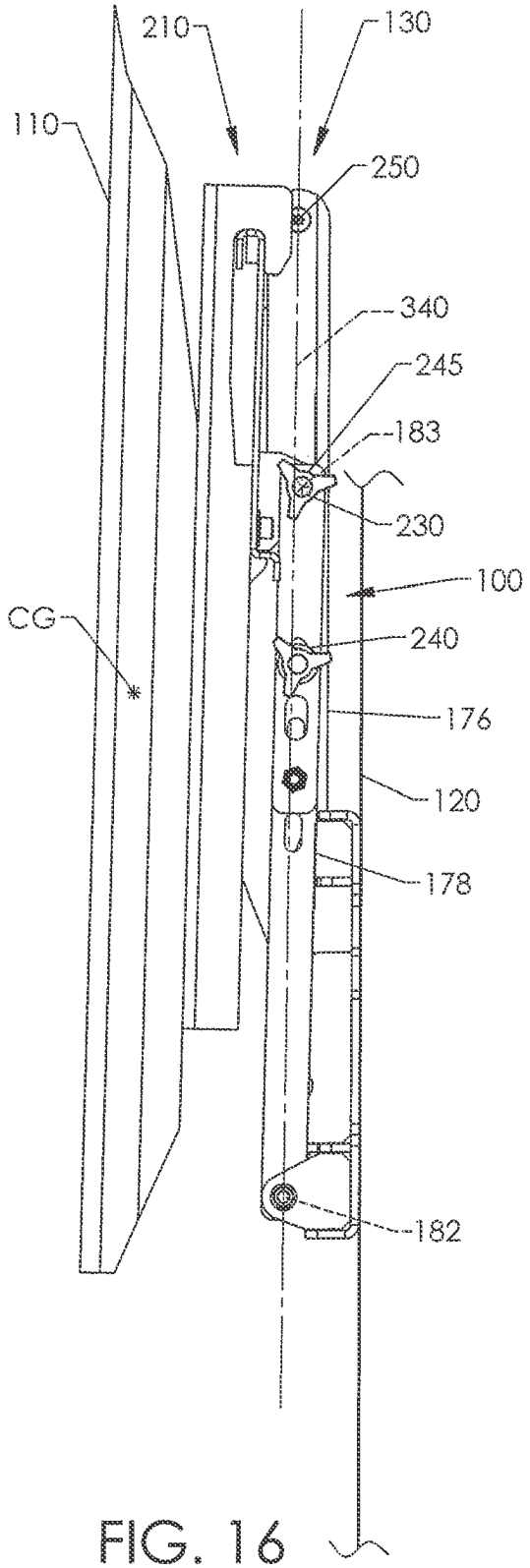
210
130
110
250
340
245
183
230
100
CG
240
176
120
178
182

FIG. 16

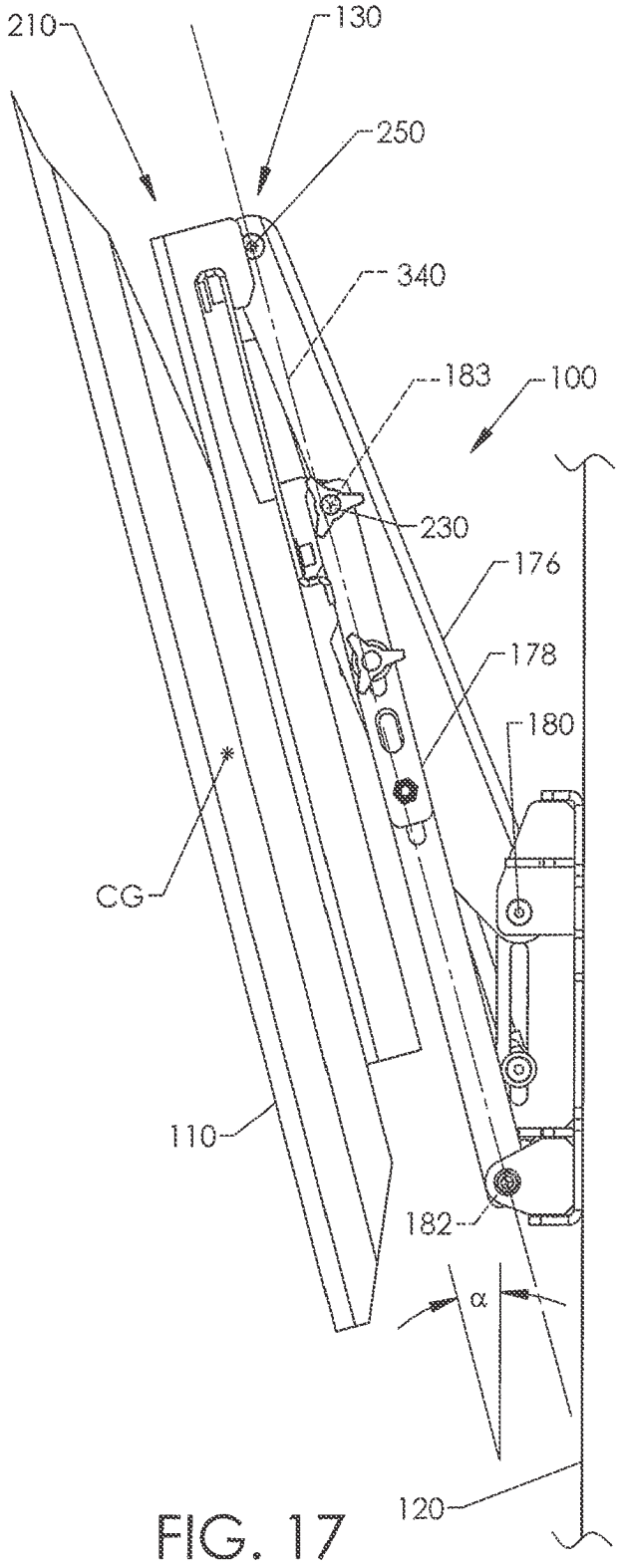
210
130
250
340
183
100
230
176
178
180
CG
110
182
α
120

FIG. 17

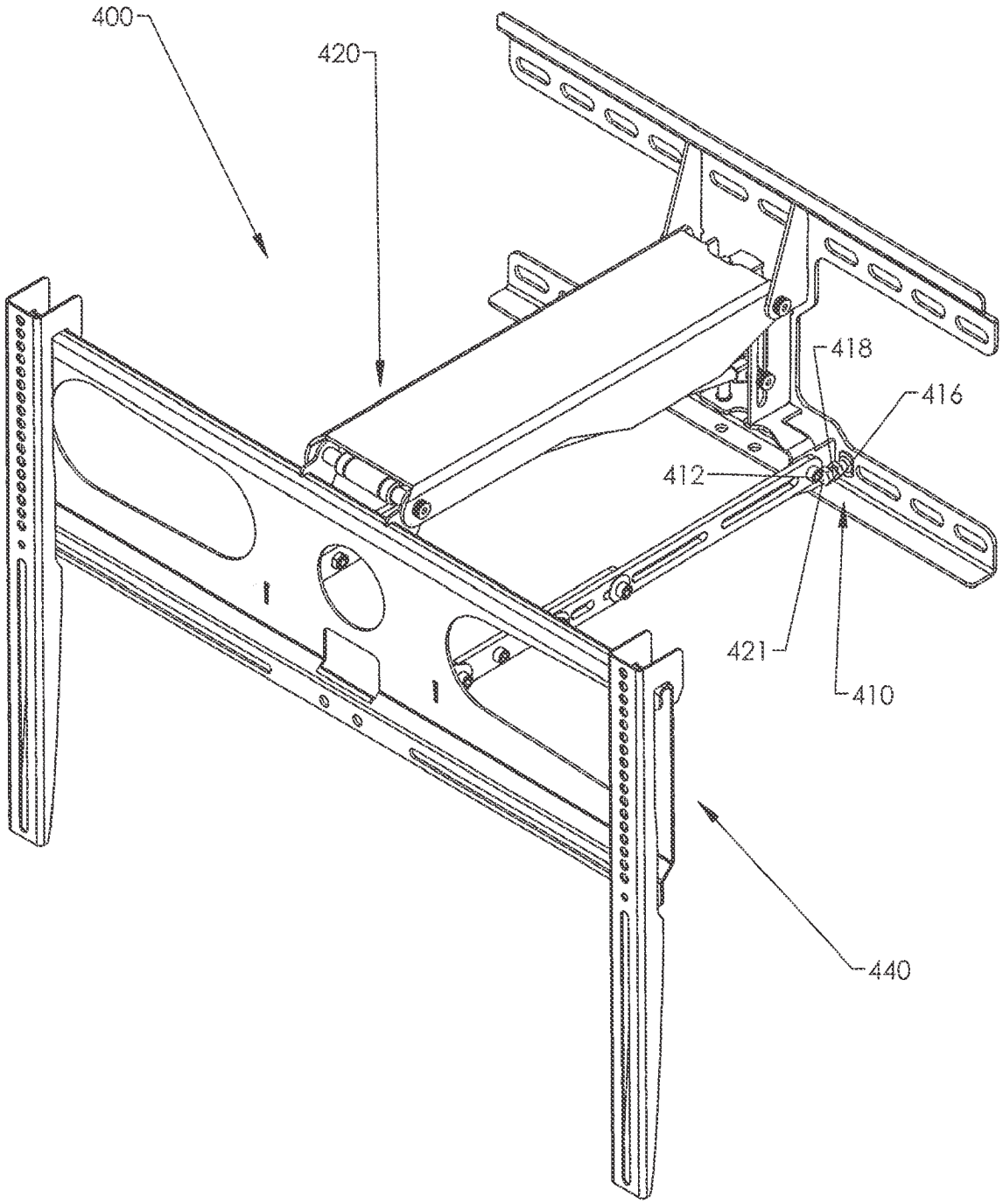

FIG. 18

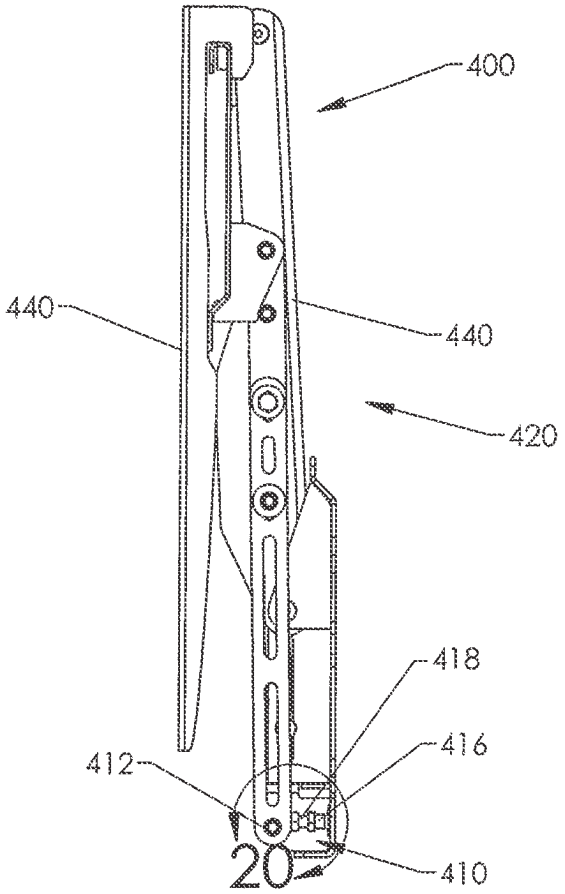

FIG. 19

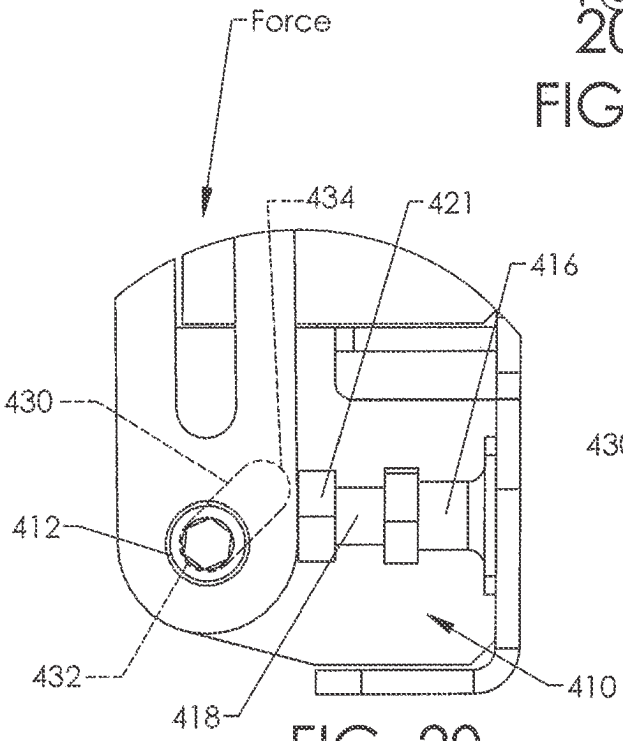

FIG. 20

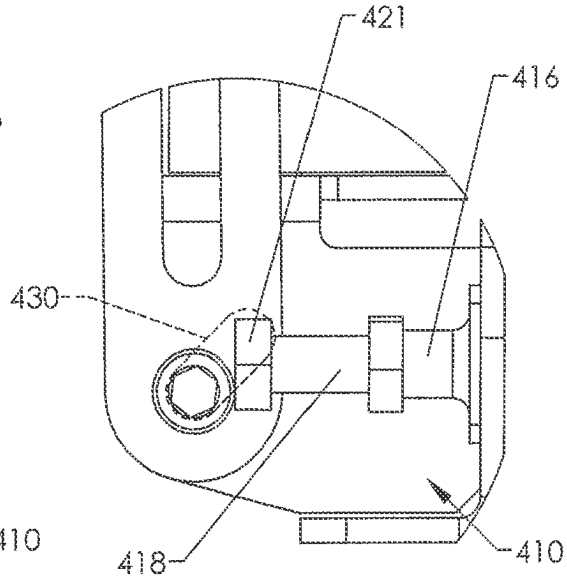

FIG. 20A

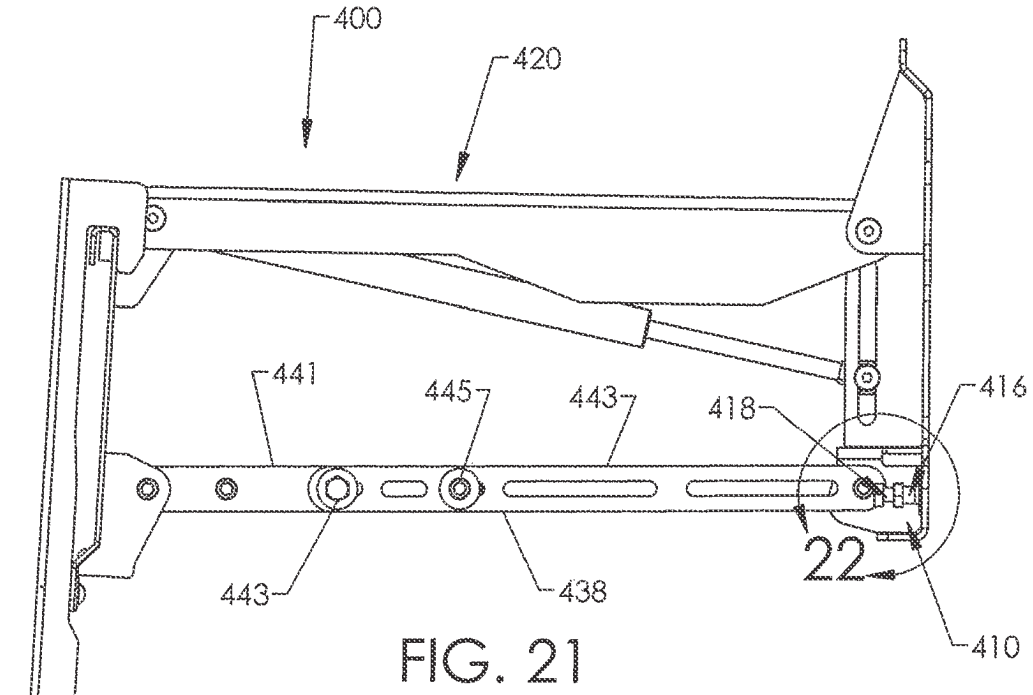
400
420
441
445
443
418
416
22
443
438
410

FIG. 21

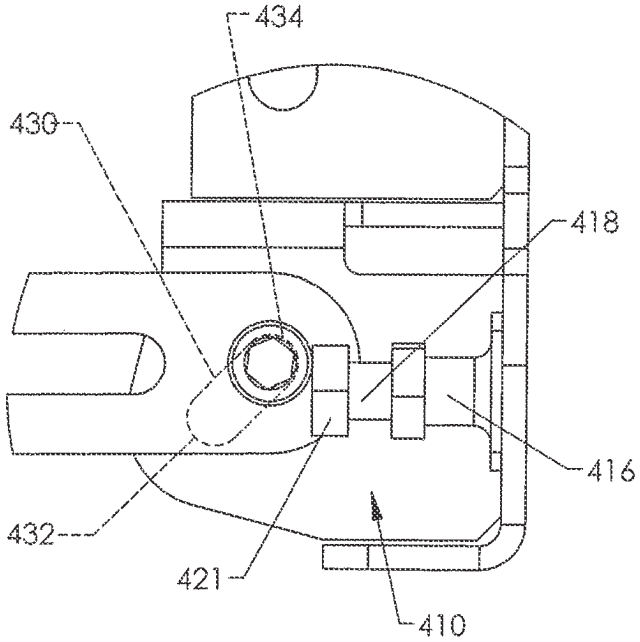
434
430
418
416
432
421
410

FIG. 22

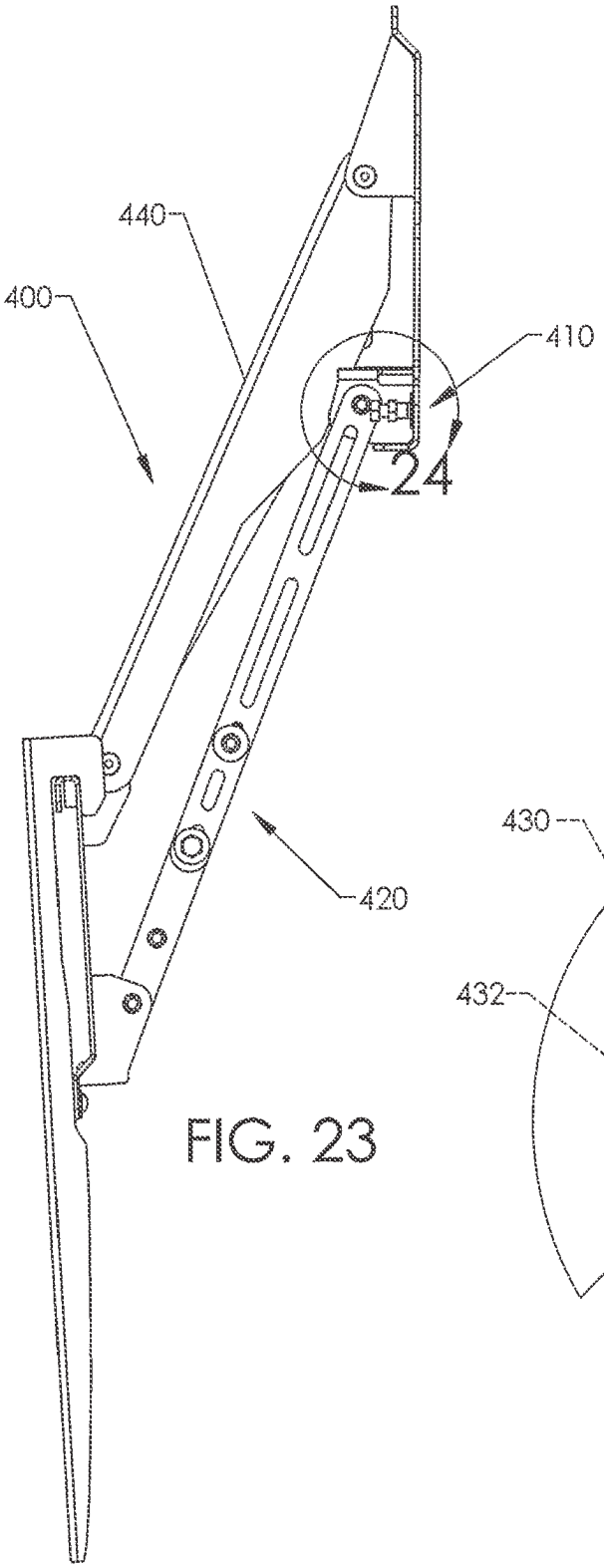

FIG. 23

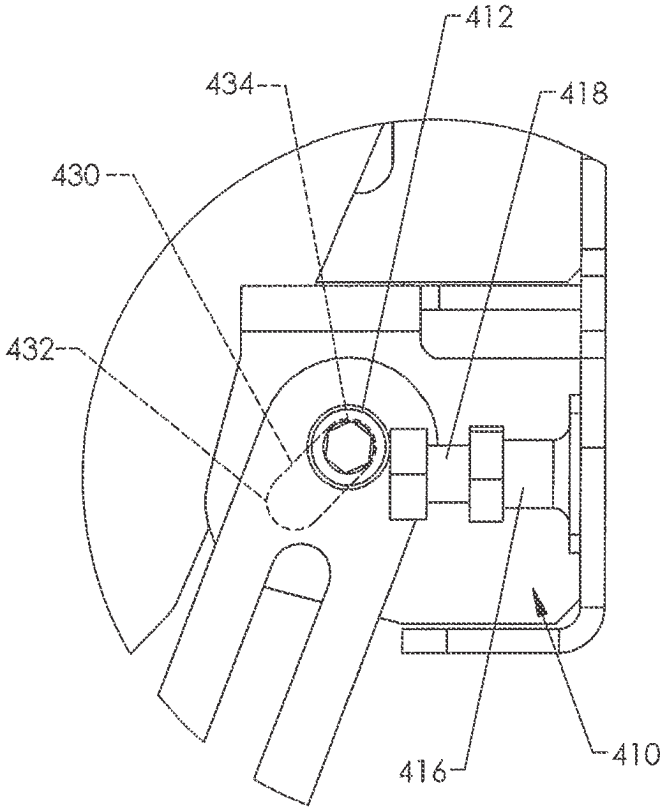

FIG. 24

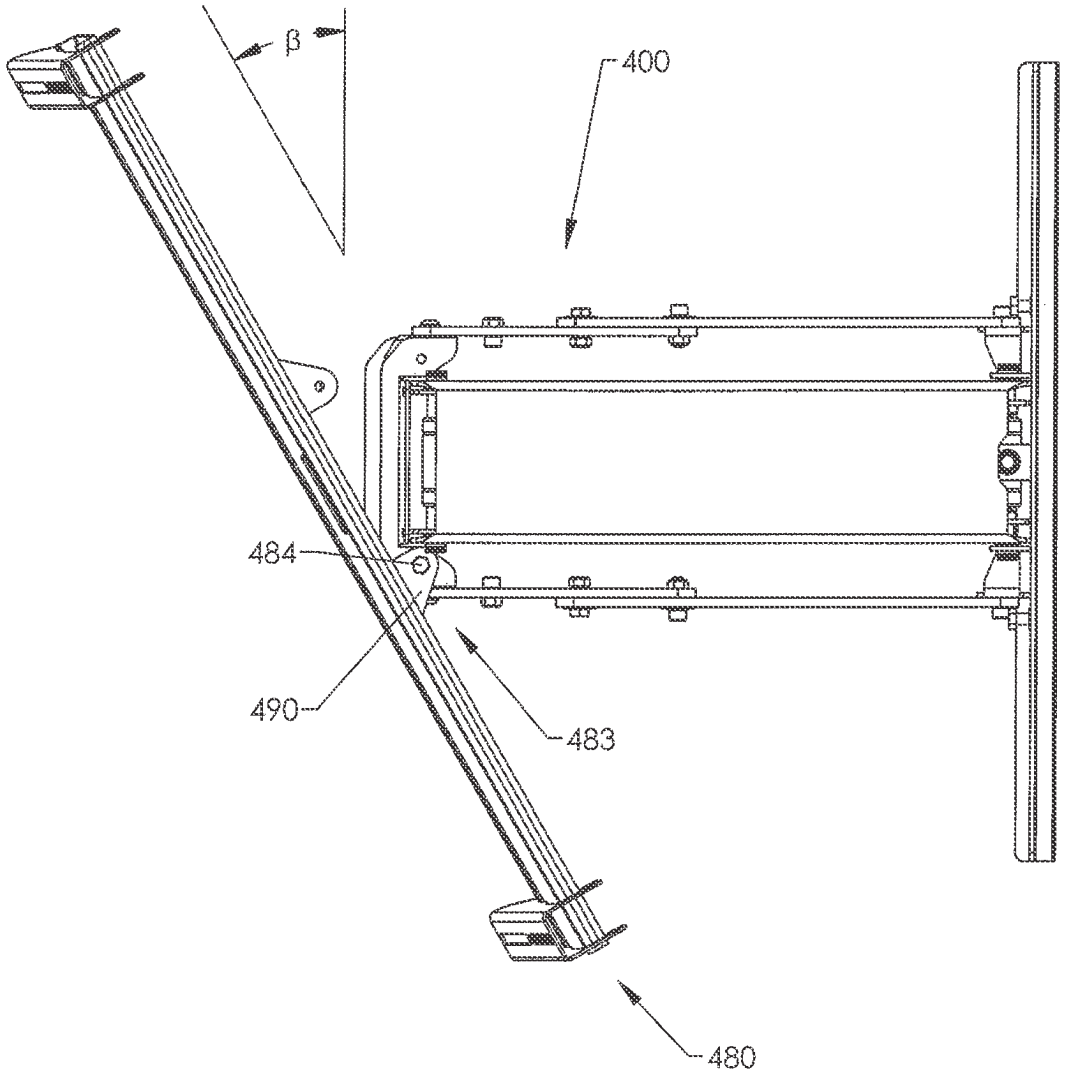

FIG. 25

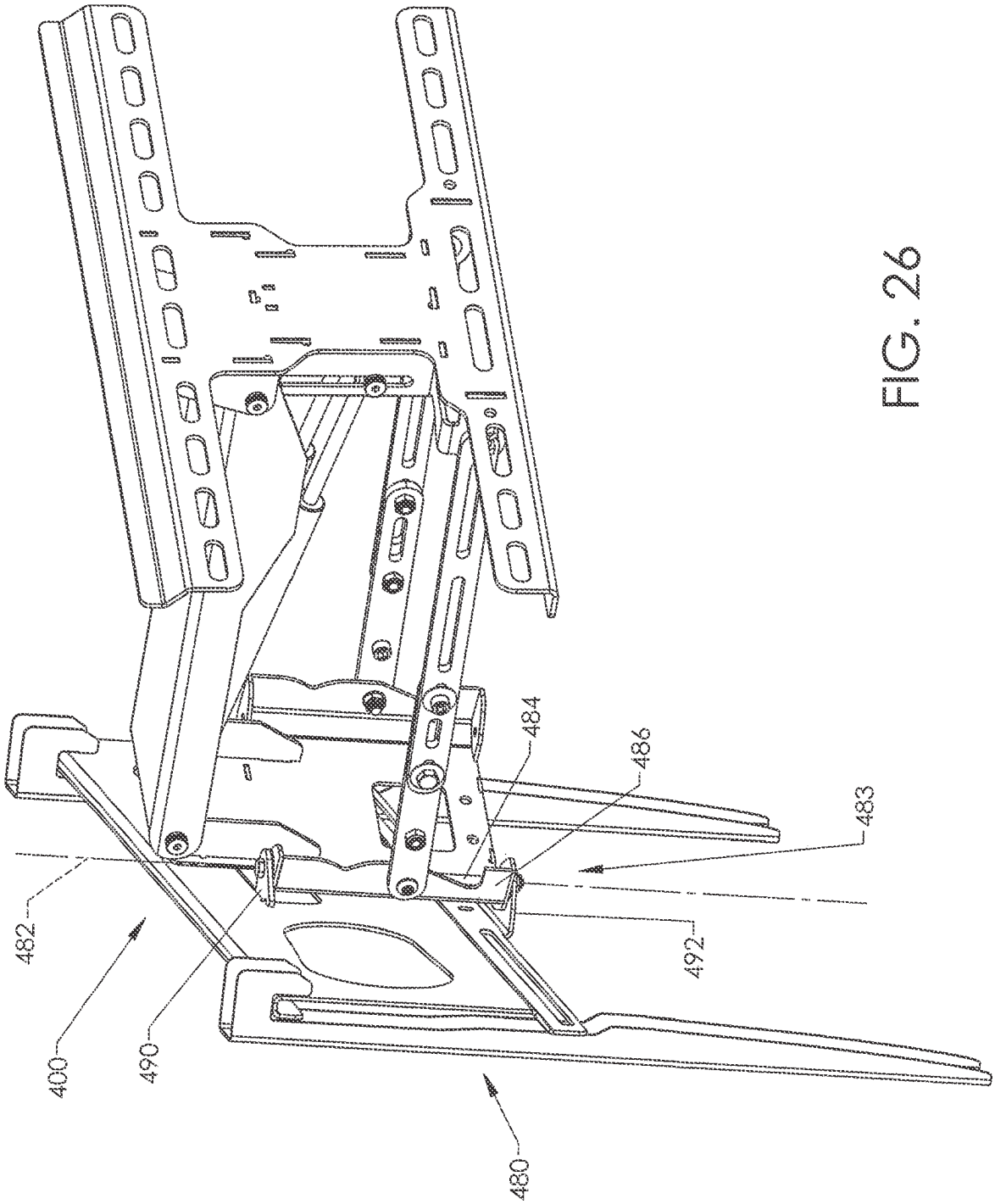

FIG. 26

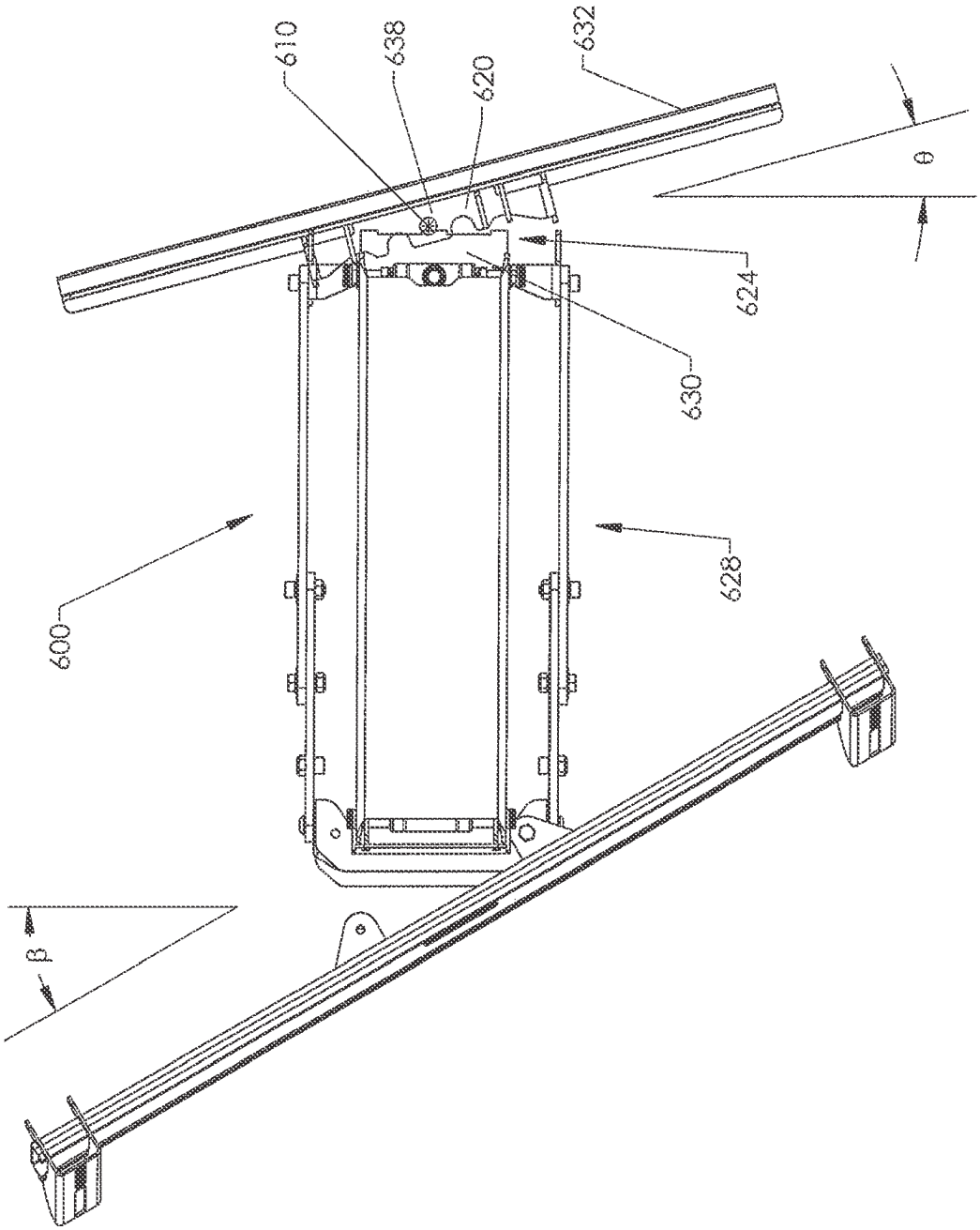

FIG. 27

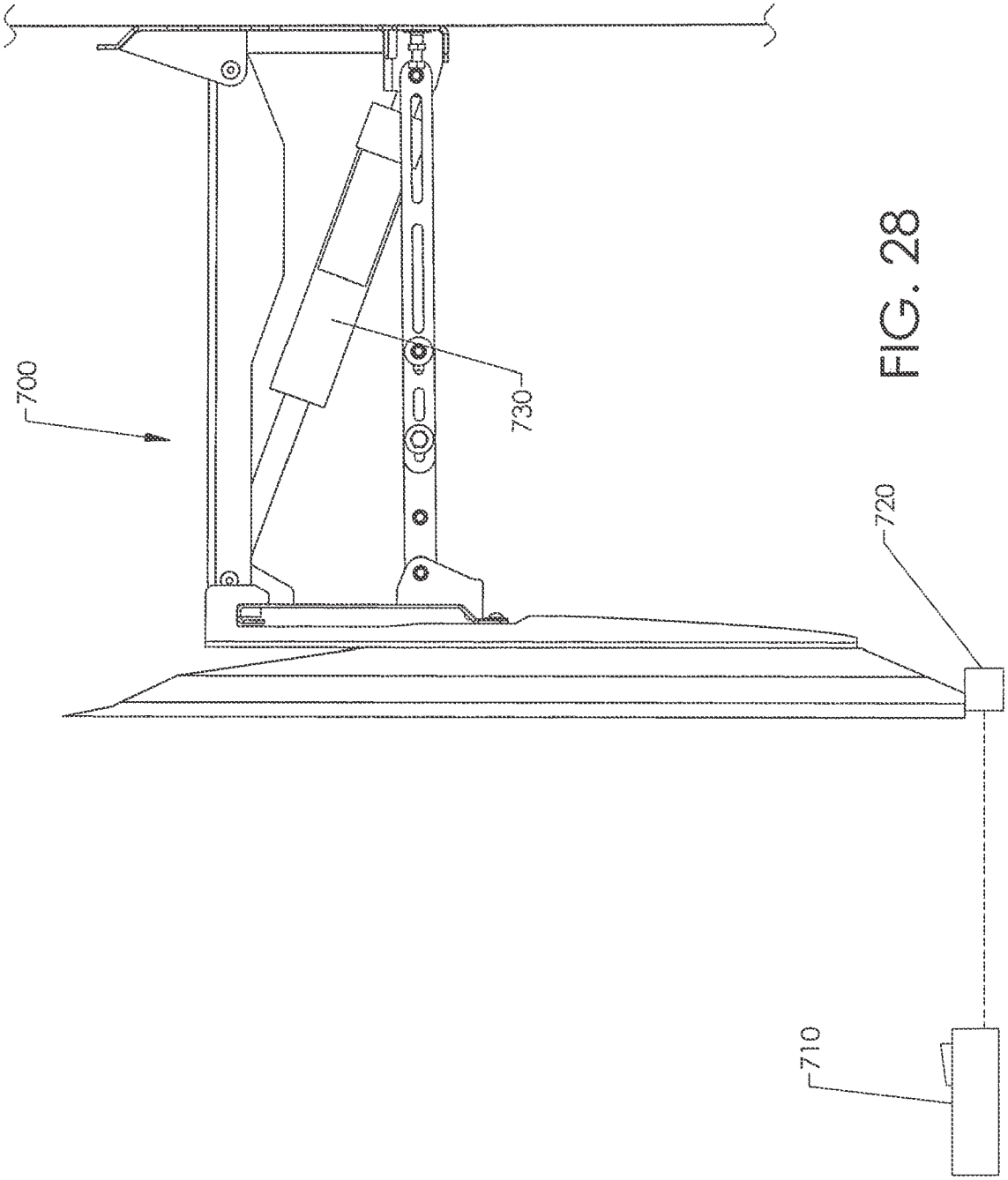

FIG. 28

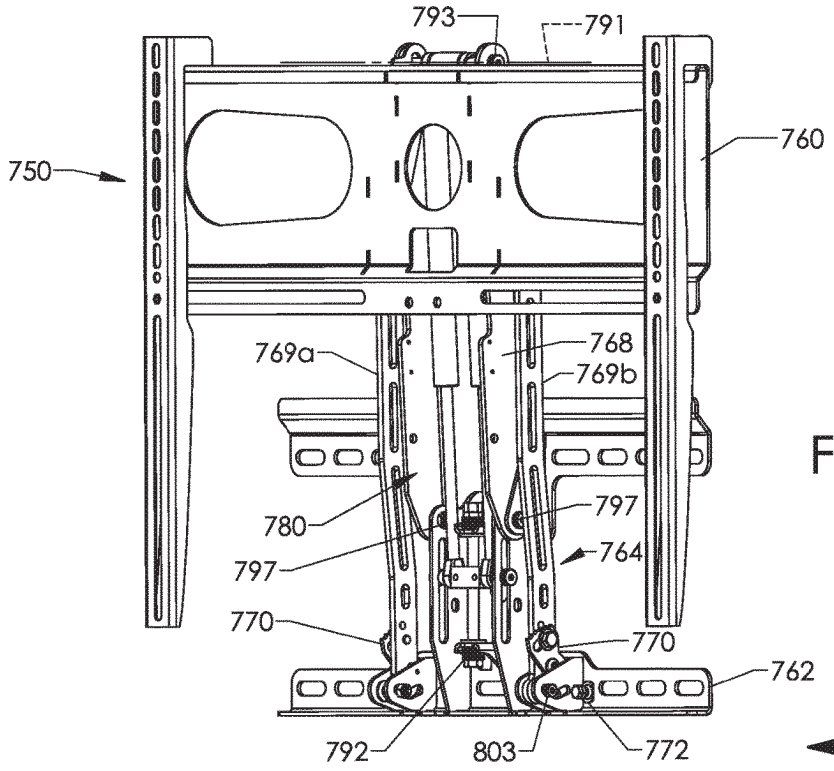
793
791
750
760
769a
768
769b
780
797
797
764
770
770
762
792
803
772

FIG. 29

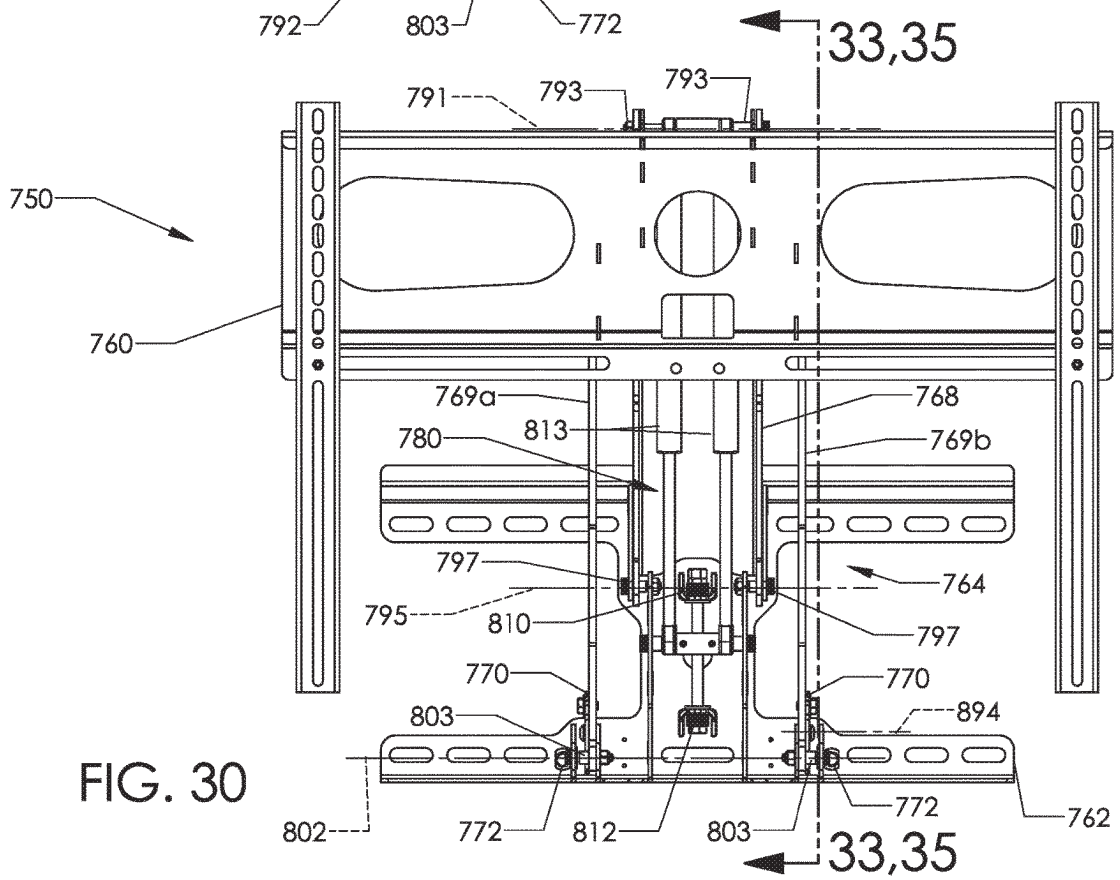
33,35
791
793
793
750
760
769a
768
813
780
769b
797
764
795
810
797
770
770
803
894
802
772
812
803
772
762
33,35

FIG. 30

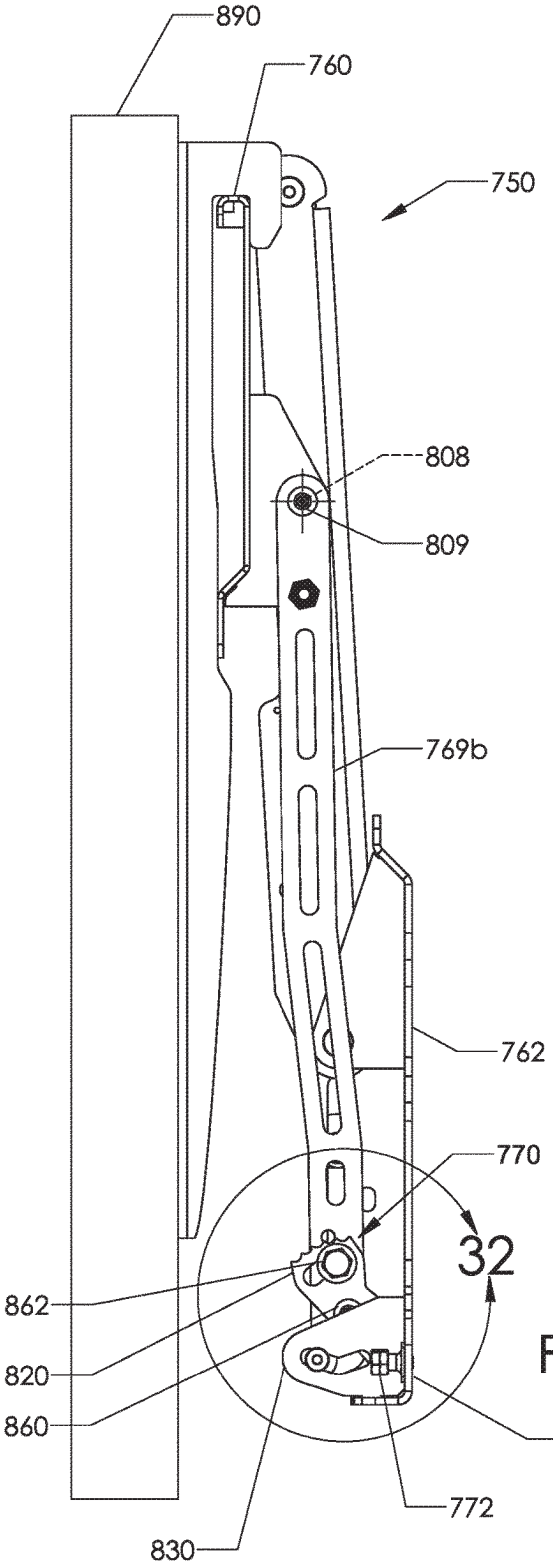
890
760
750
808
809
769b
762
770
32
862
820
860
822
772
830

FIG. 31

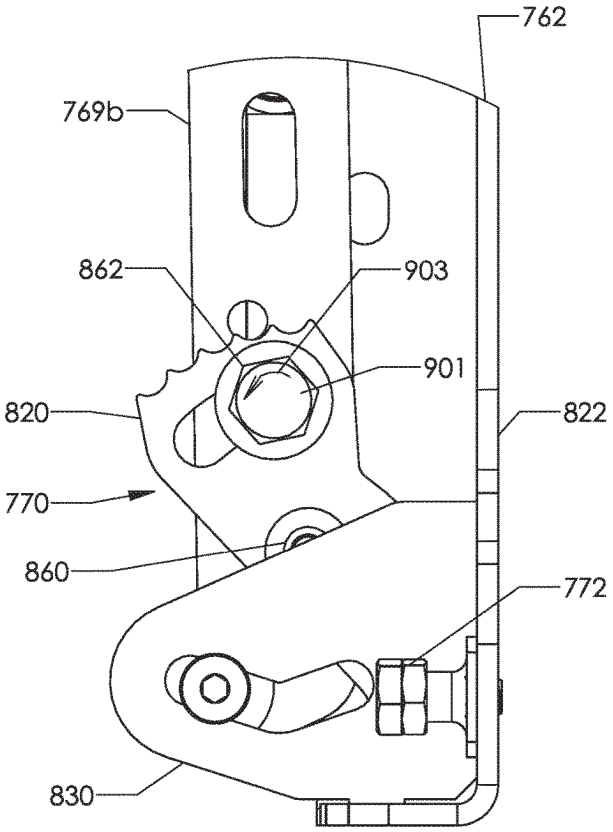
762
769b
862
903
901
820
822
770
860
772
830

FIG. 32

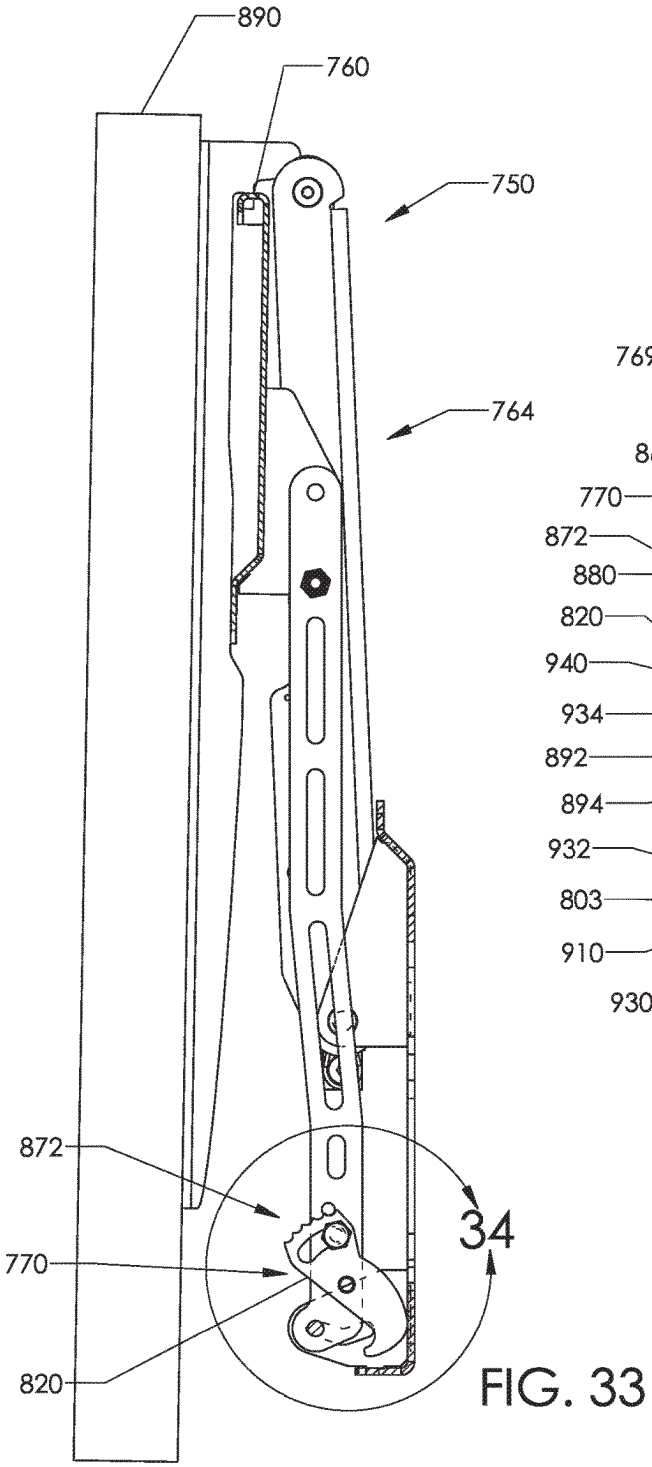
890
760
750
764
872
770
820
34

FIG. 33

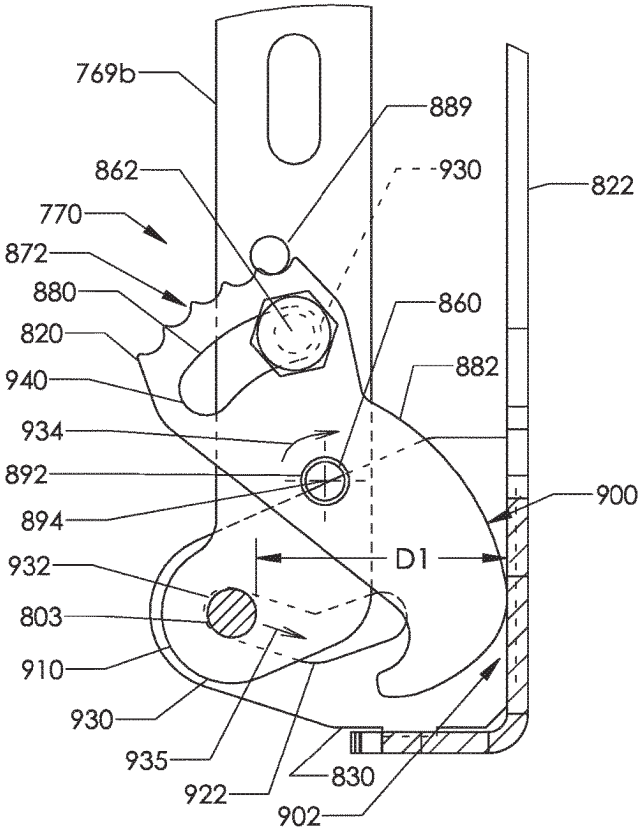
769b
889
930
822
862
770
872
880
820
940
860
882
934
892
894
900
D1
932
803
910
930
935
922
830
902

FIG. 34

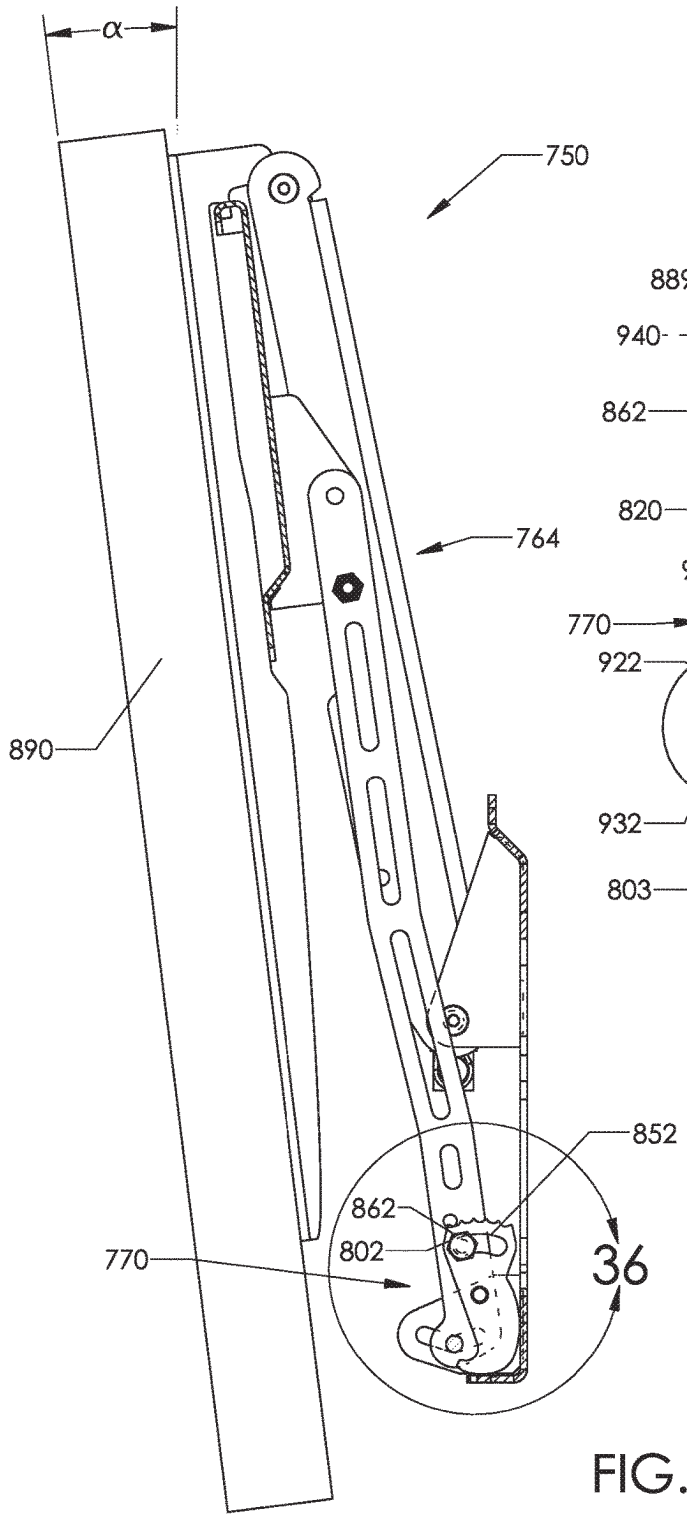
α
750
764
890
852
862
802
770
36

FIG. 35

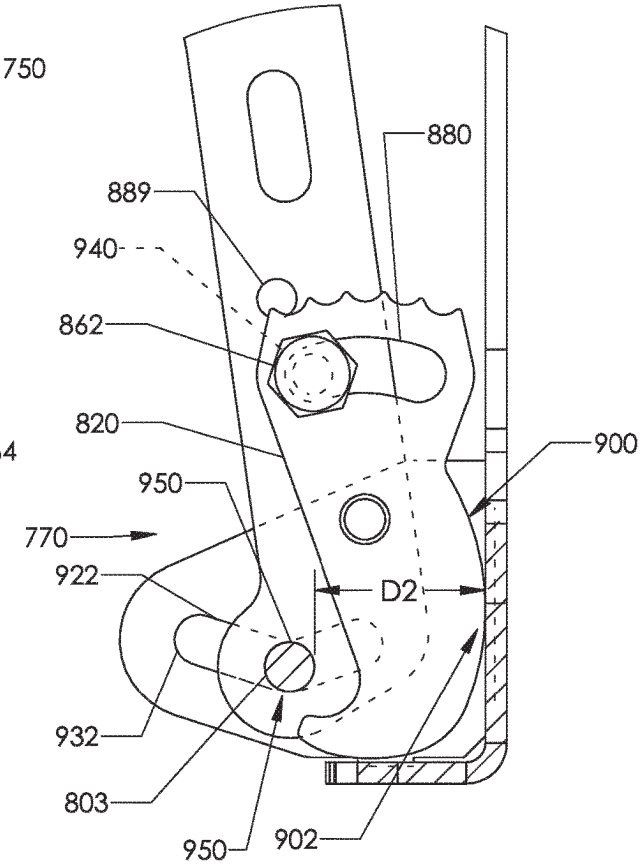
880
889
940
862
820
900
950
770
922
D2
932
803
950
902

FIG. 36

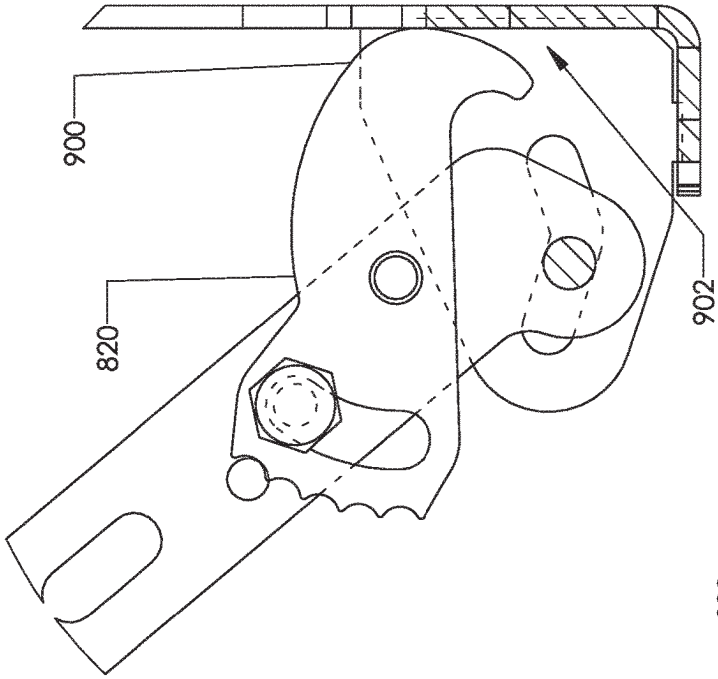

FIG. 38

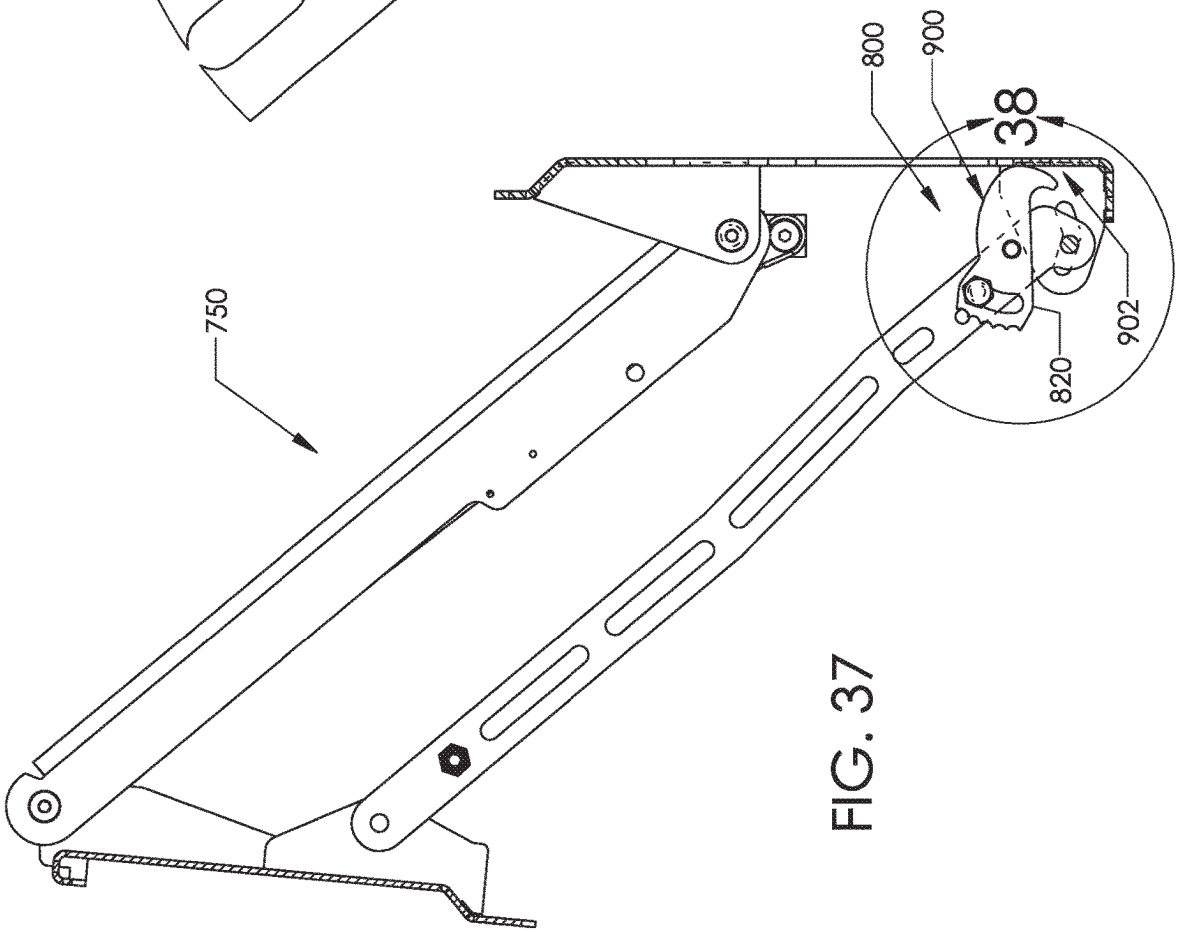

FIG. 37

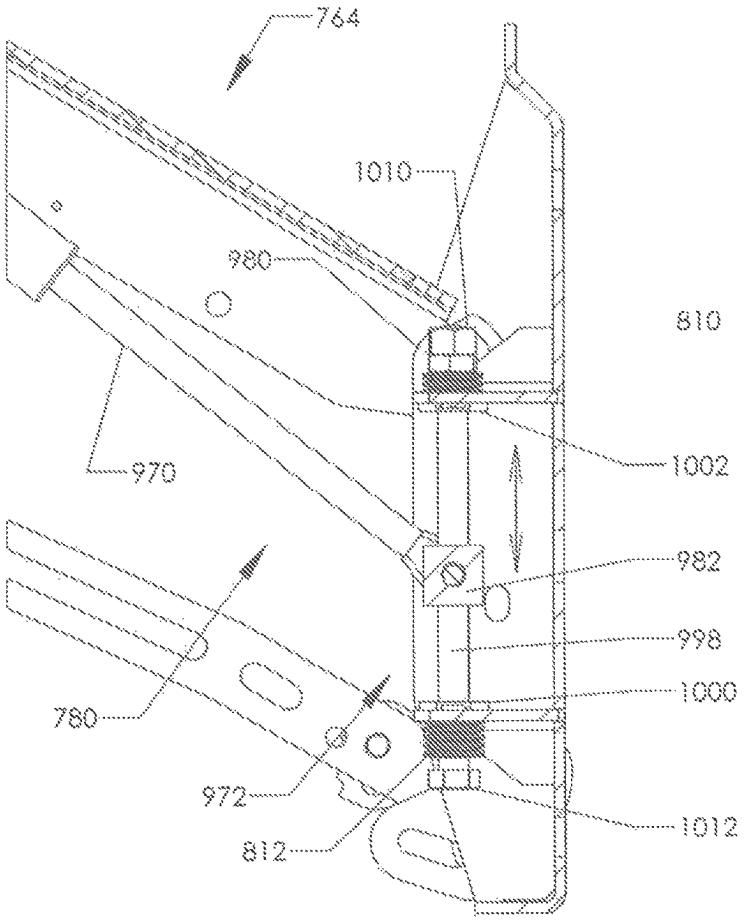
764
1010
980
810
970
1002
982
998
1000
780
972
812
1012

FIG. 39

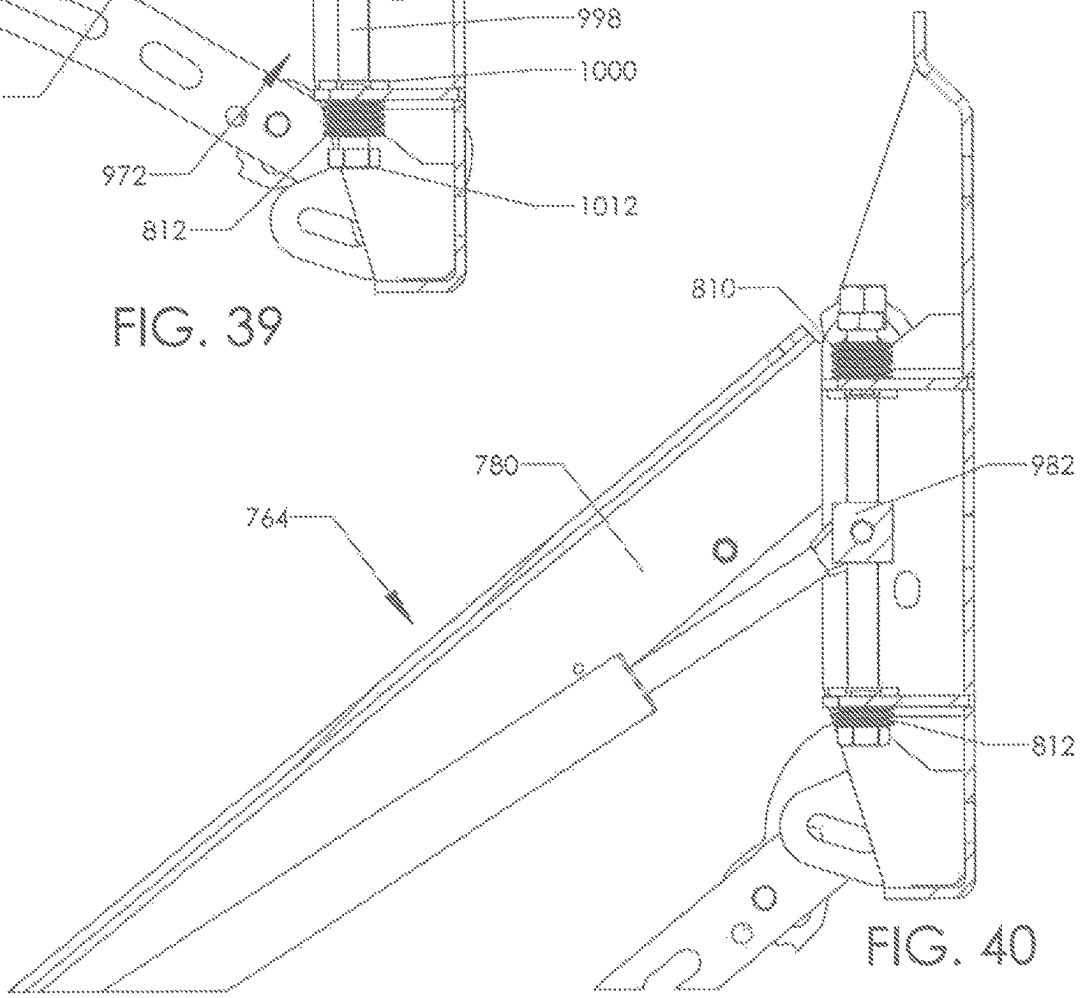
810
780
982
764
812

FIG. 40

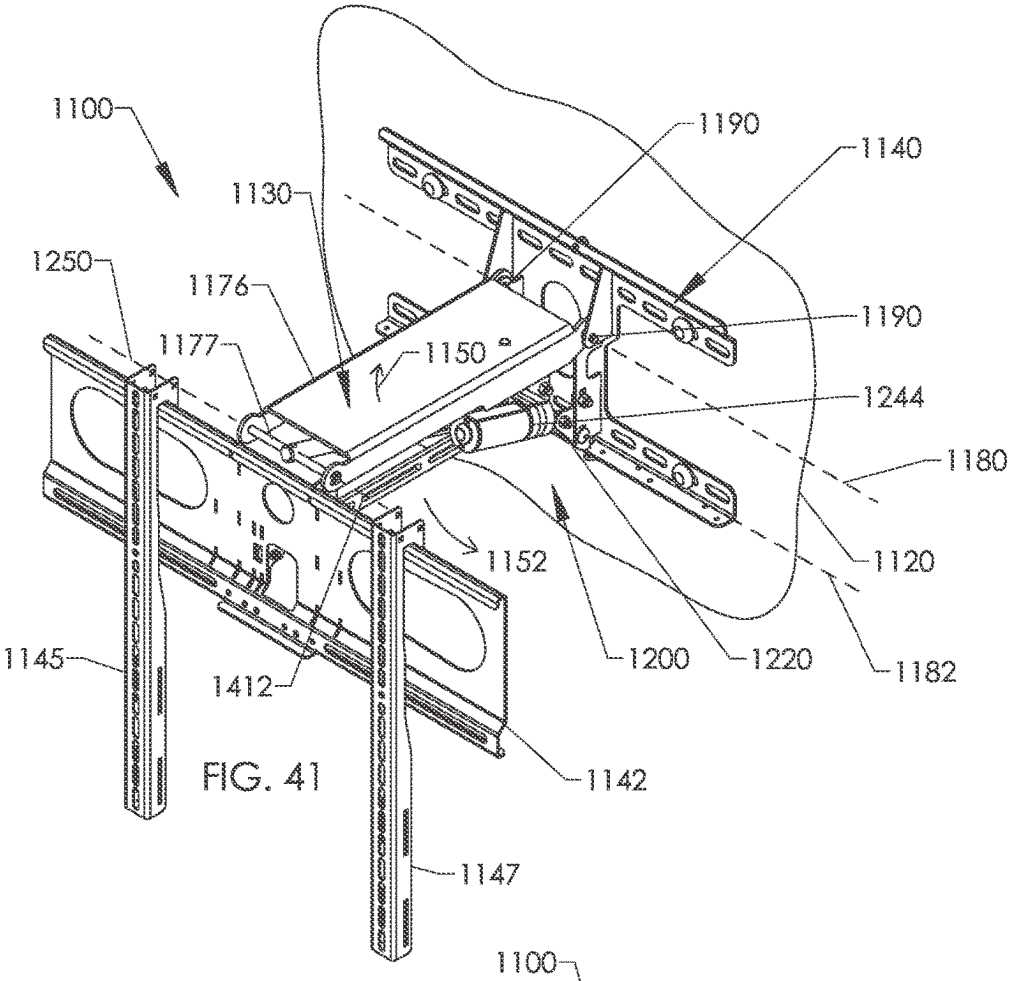
1100
1190
1140
1130
1250
1176
1190
1177
1150
1244
1180
1152
1120
1145
1200
1220
1182
1412
1142
1147

FIG. 41

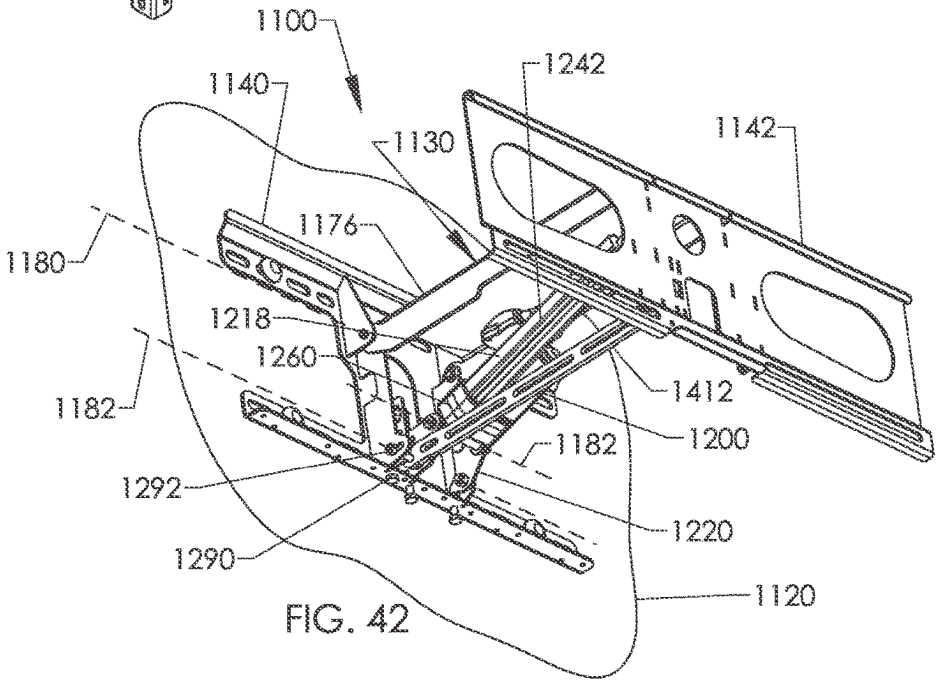
1100
1242
1140
1142
1130
1176
1180
1218
1260
1412
1182
1200
1182
1292
1220
1290
1120

FIG. 42

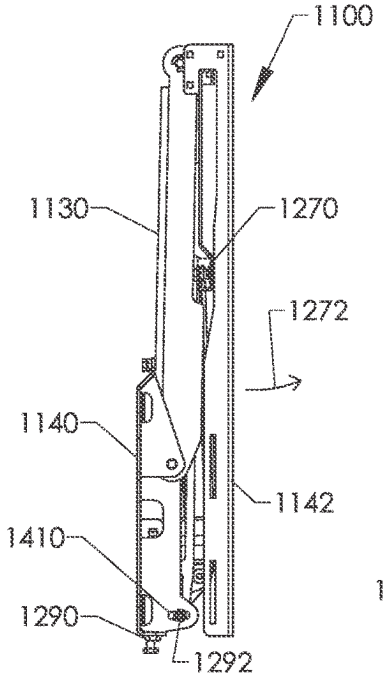

FIG. 43

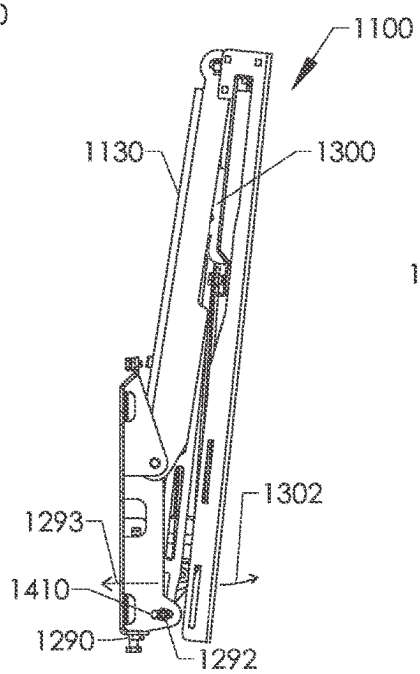

FIG. 44

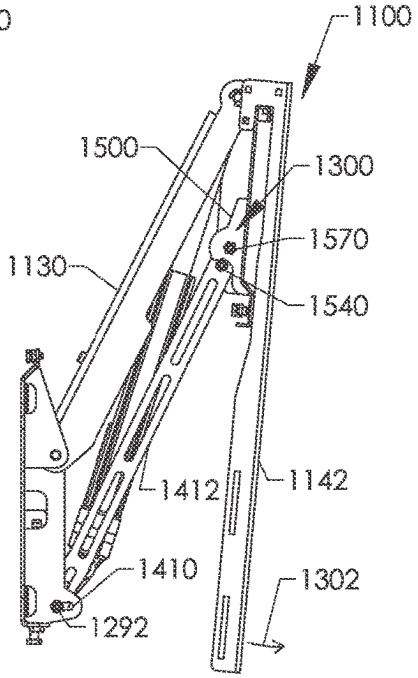

FIG. 45

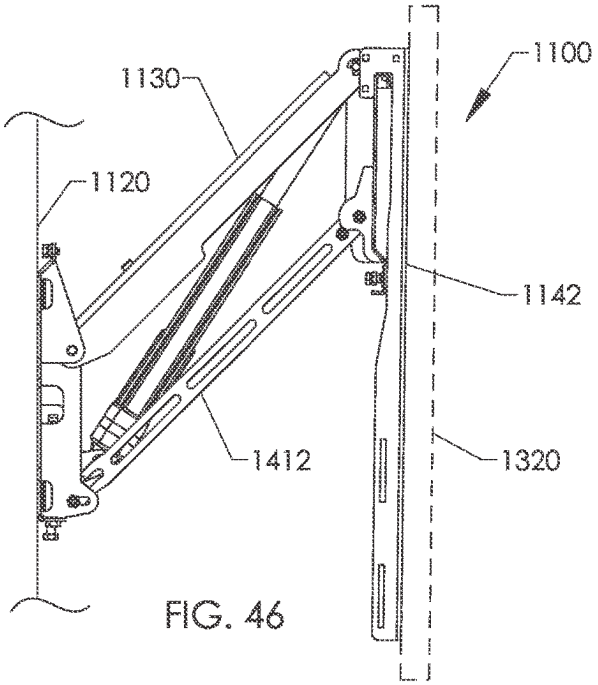

FIG. 46

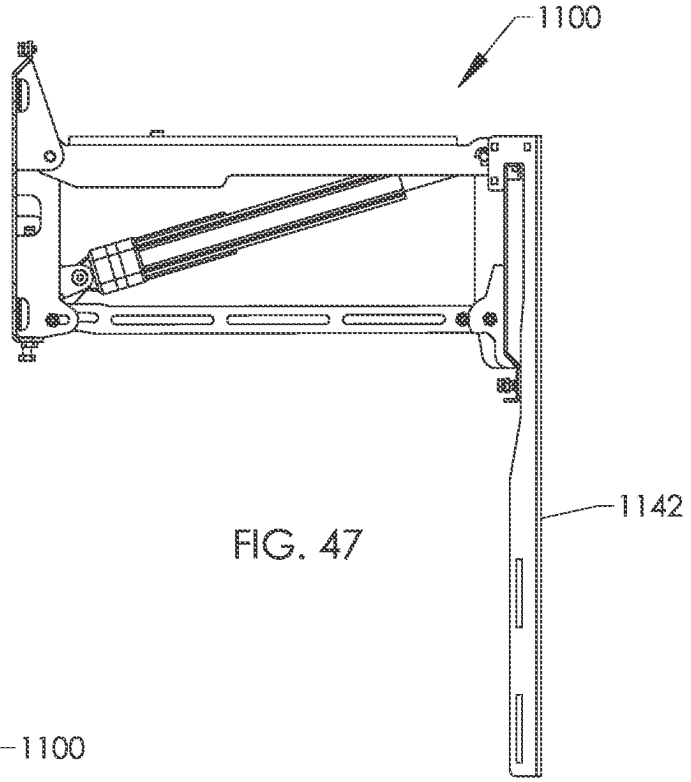

FIG. 47

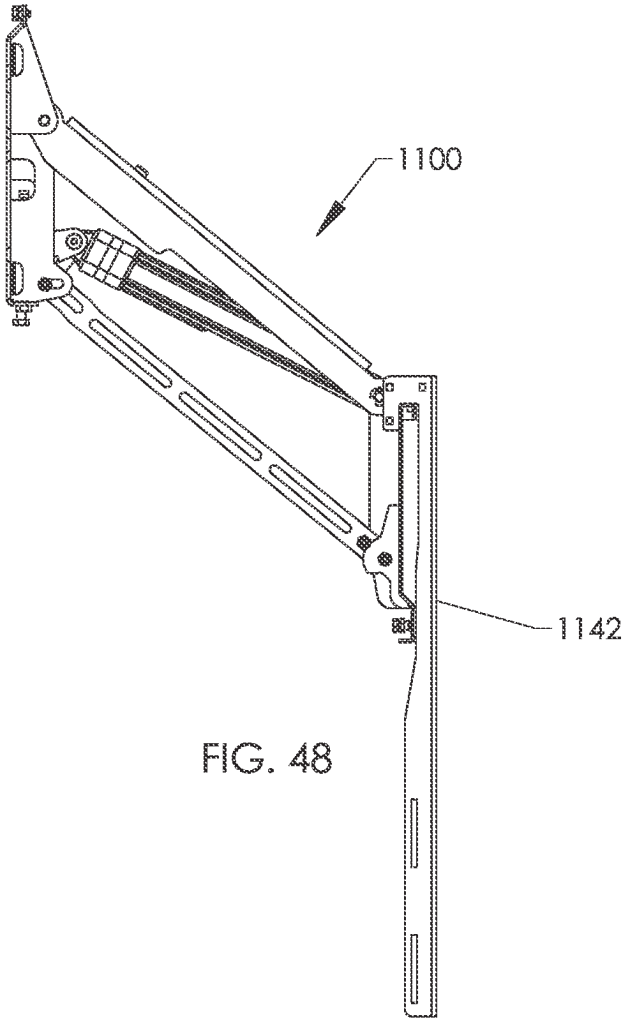

FIG. 48

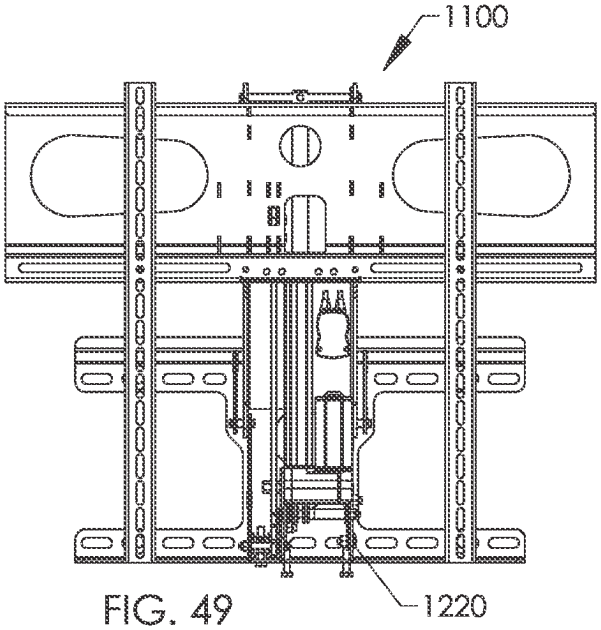

FIG. 49

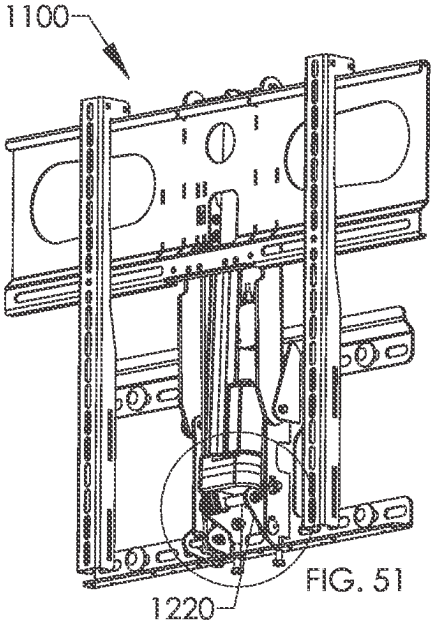

FIG. 50

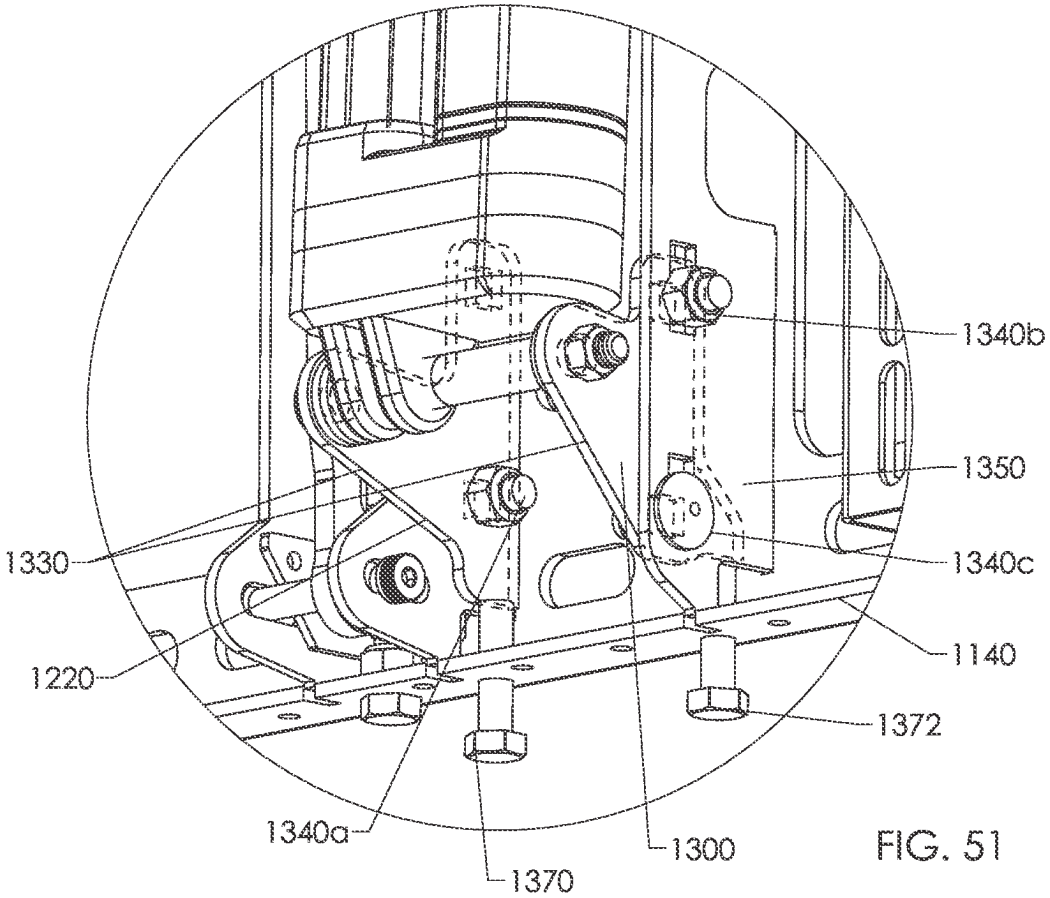

FIG. 51

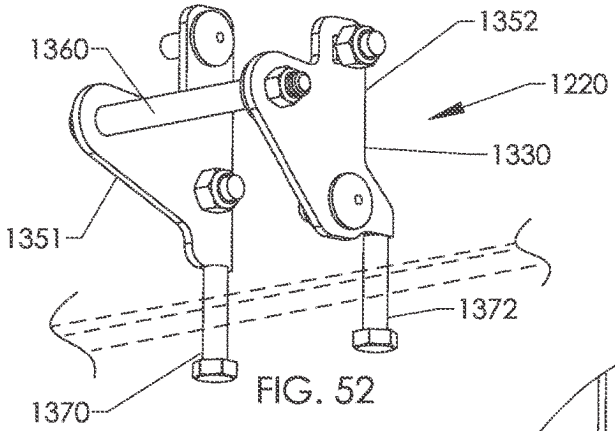

FIG. 52

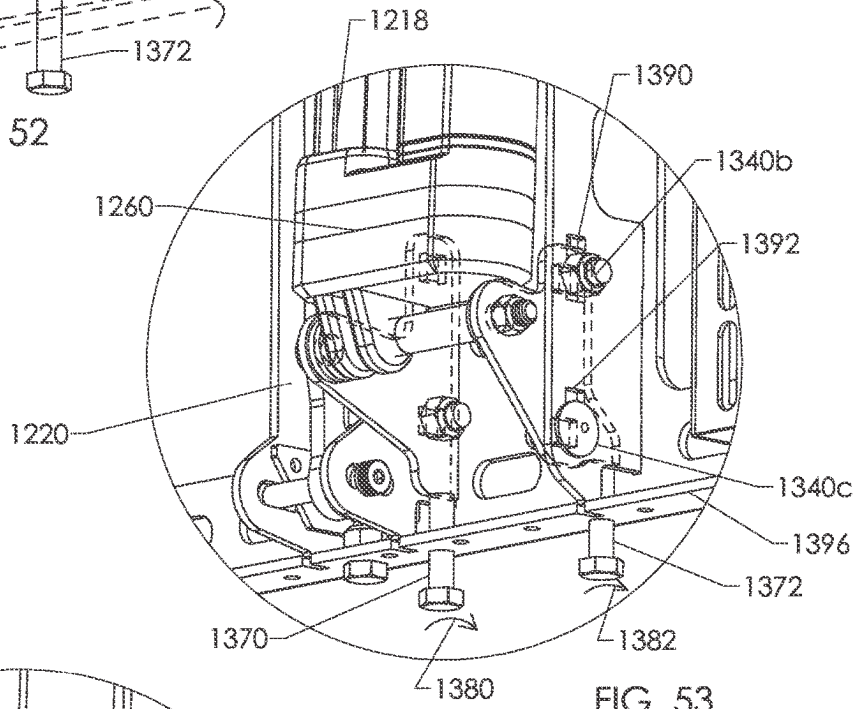

FIG. 53

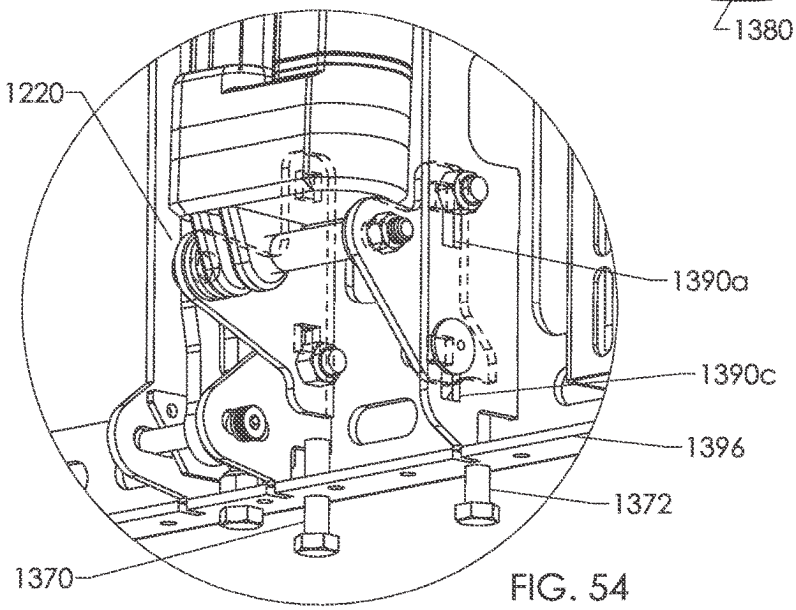

FIG. 54

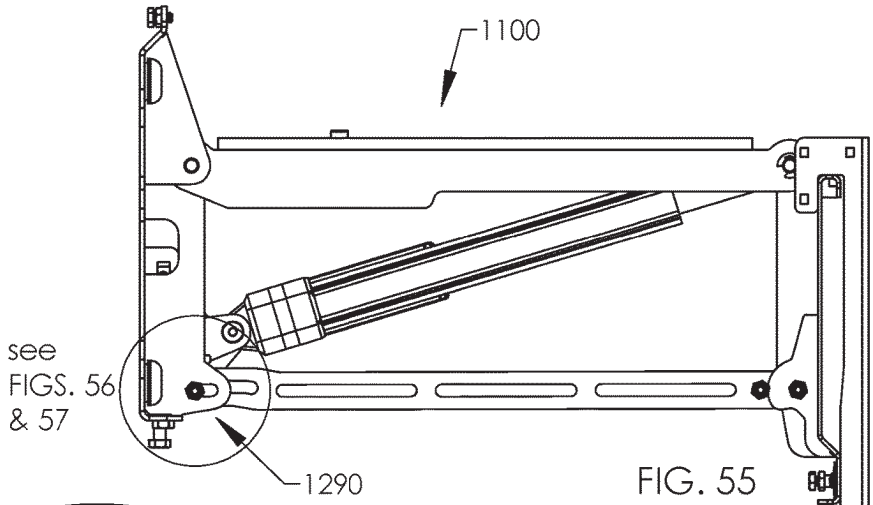

FIG. 55

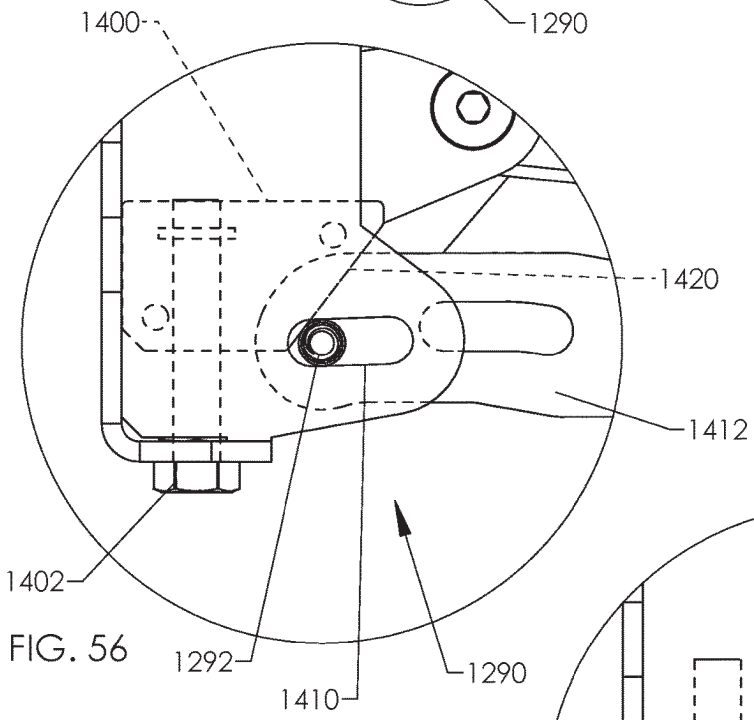

FIG. 56

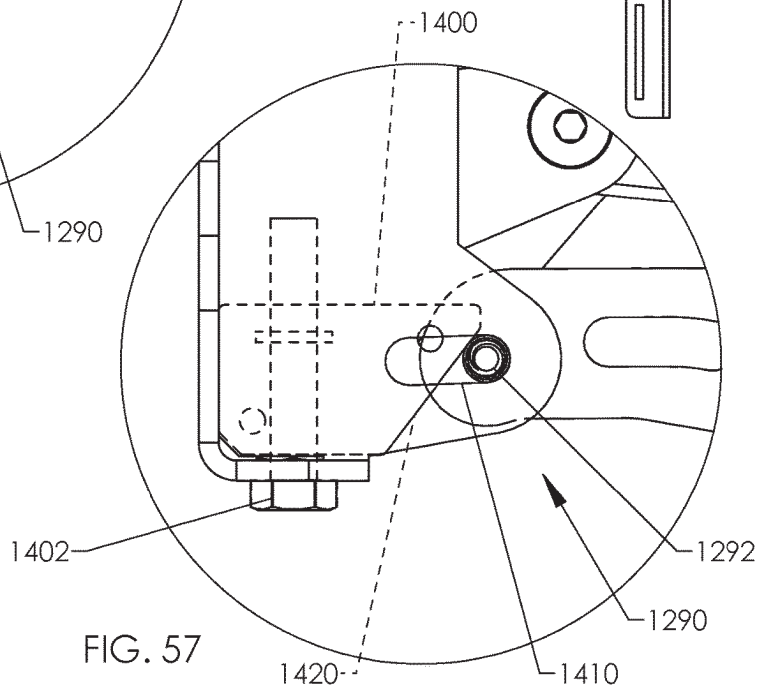

FIG. 57

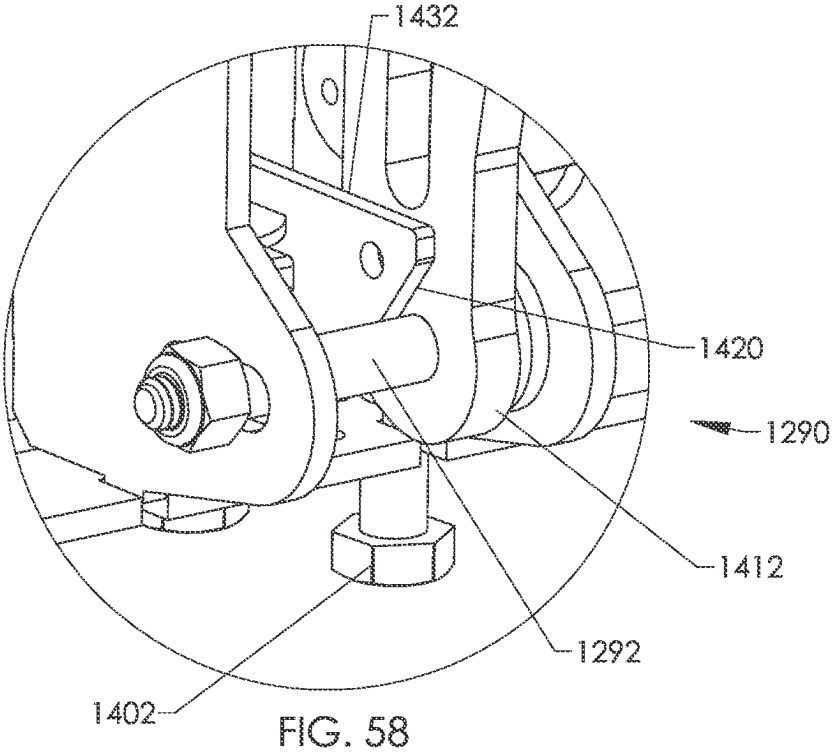
1432
1420
1290
1412
1292
1402

FIG. 58

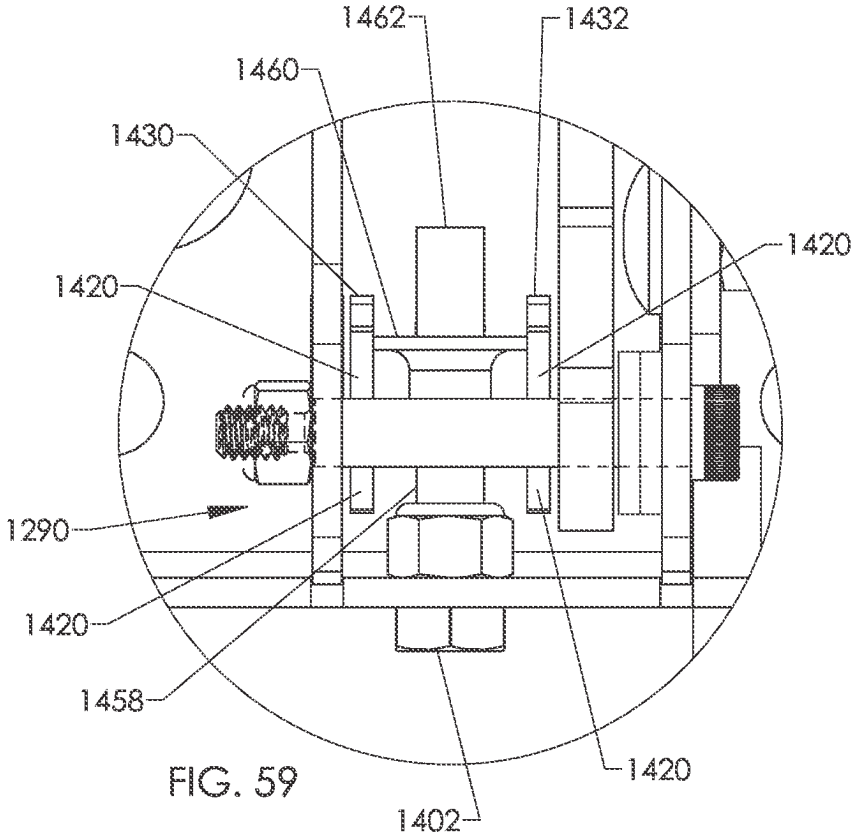
1462
1432
1460
1430
1420
1420
1290
1420
1458
1420
1402

FIG. 59

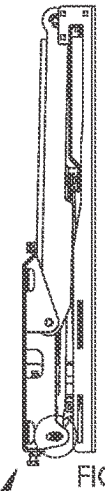

FIG. 60

FIG. 60A

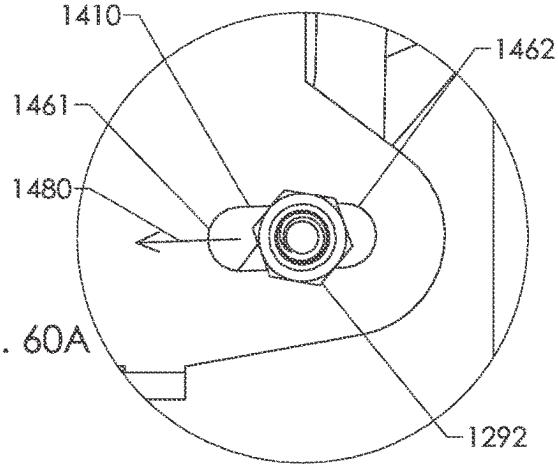

FIG. 60A

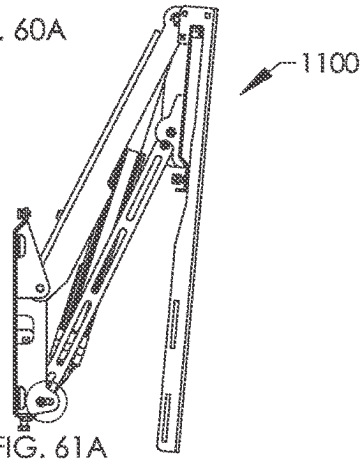

FIG. 61

FIG. 61A

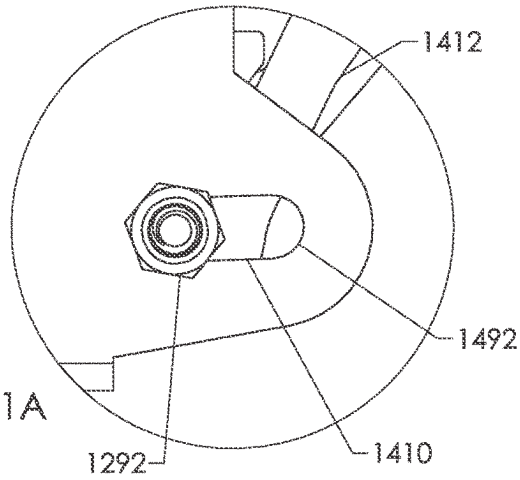

FIG. 61A

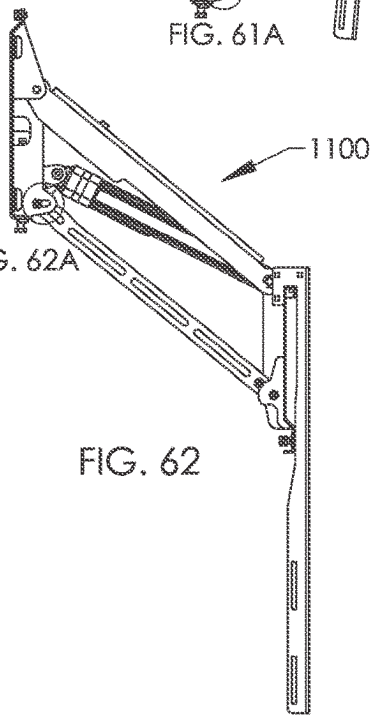

FIG. 62A

FIG. 62

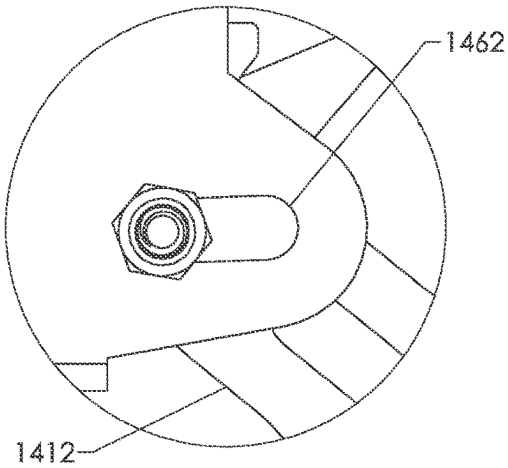

FIG. 62A

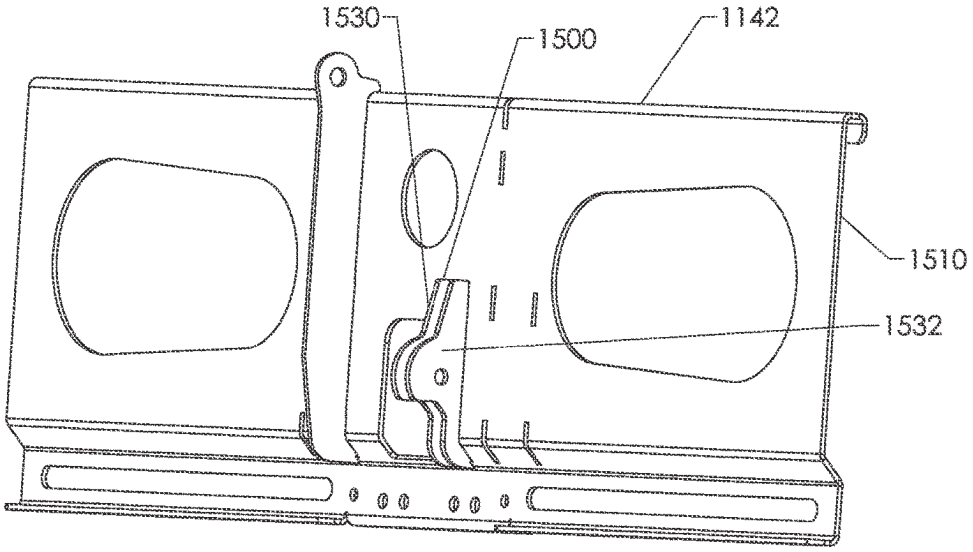

FIG. 63

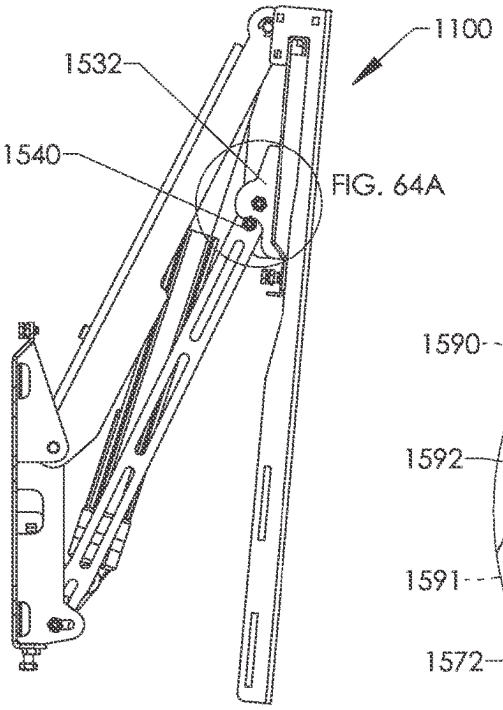

FIG. 64

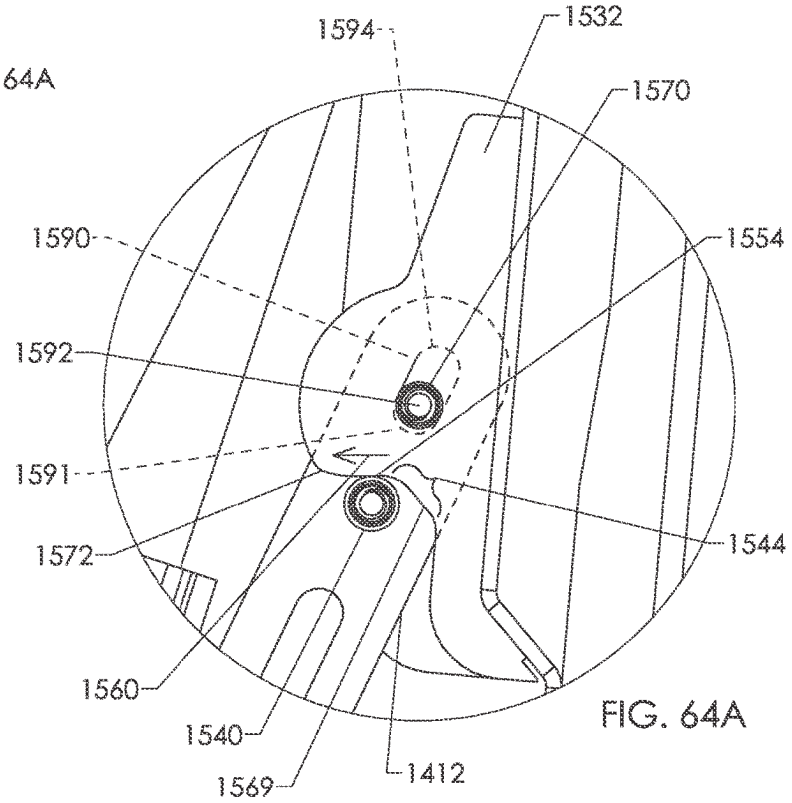

FIG. 64A

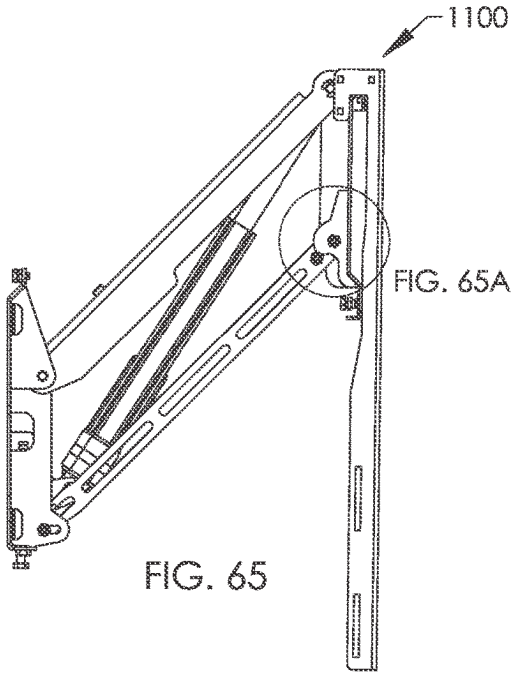

FIG. 65

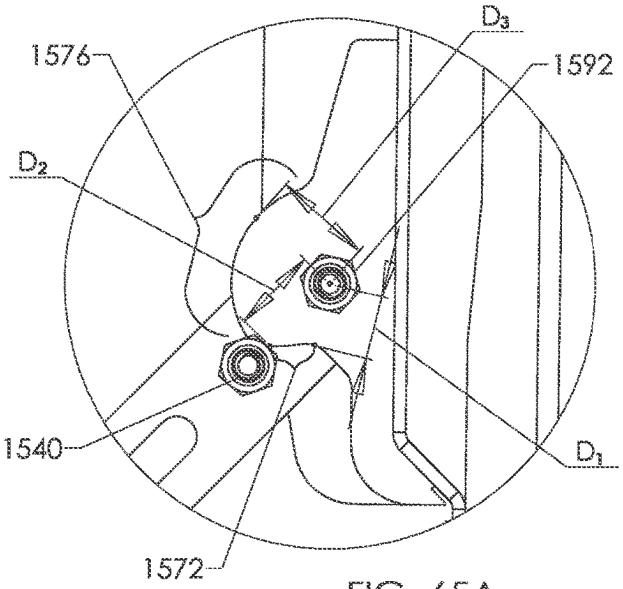

FIG. 65A

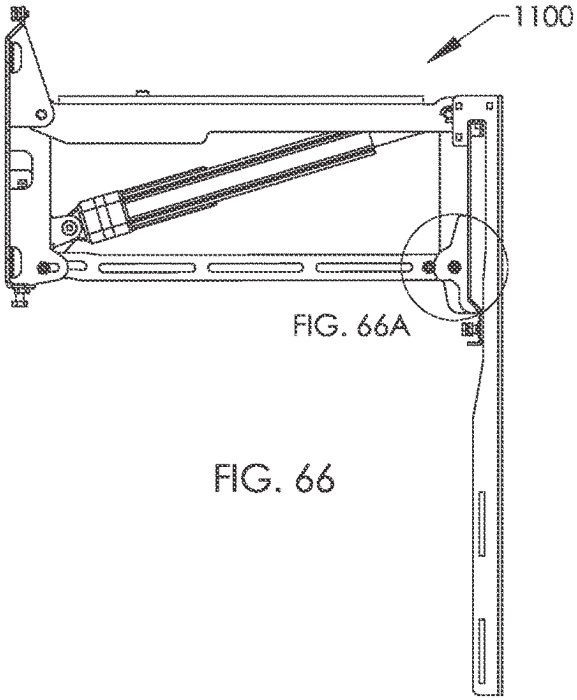

FIG. 66

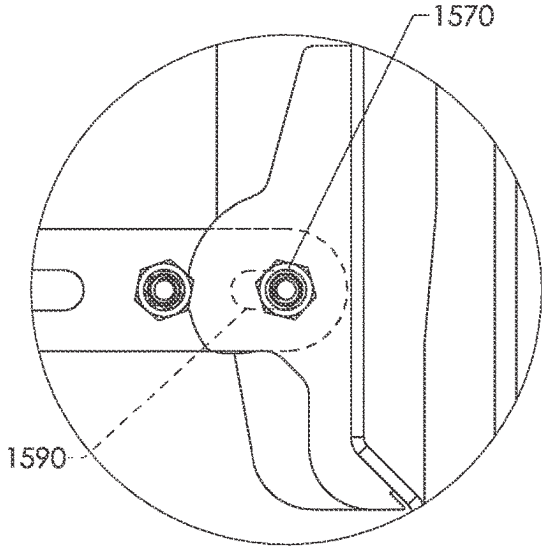

FIG. 66A

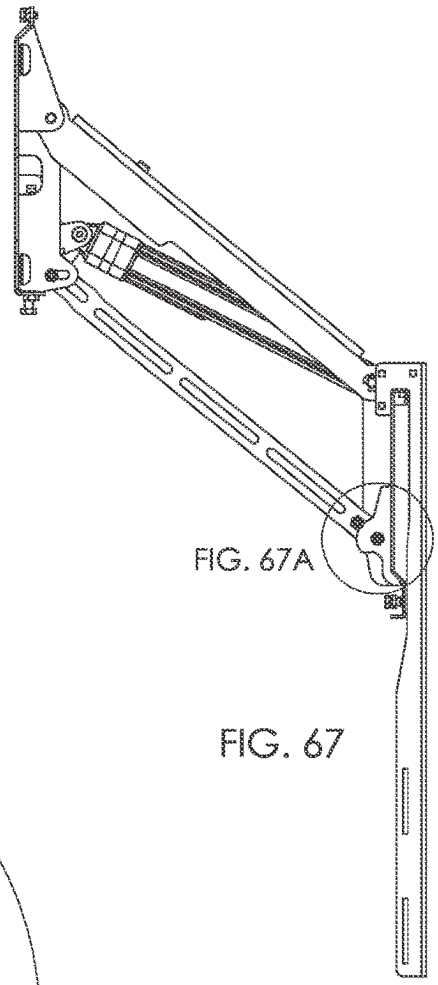

FIG. 67

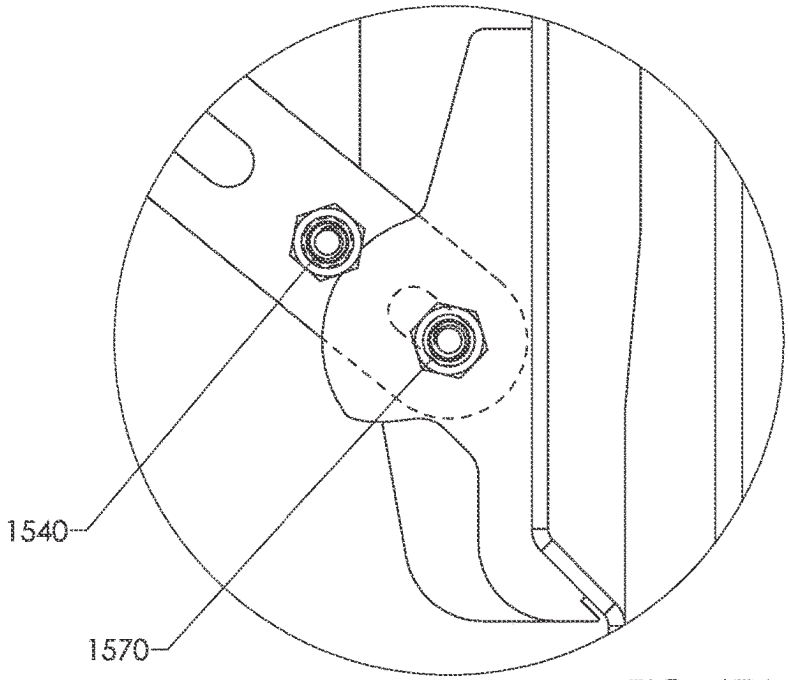

FIG. 67A

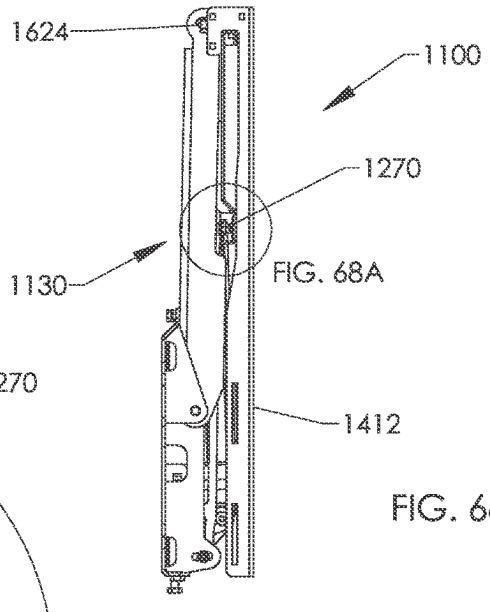

FIG. 68

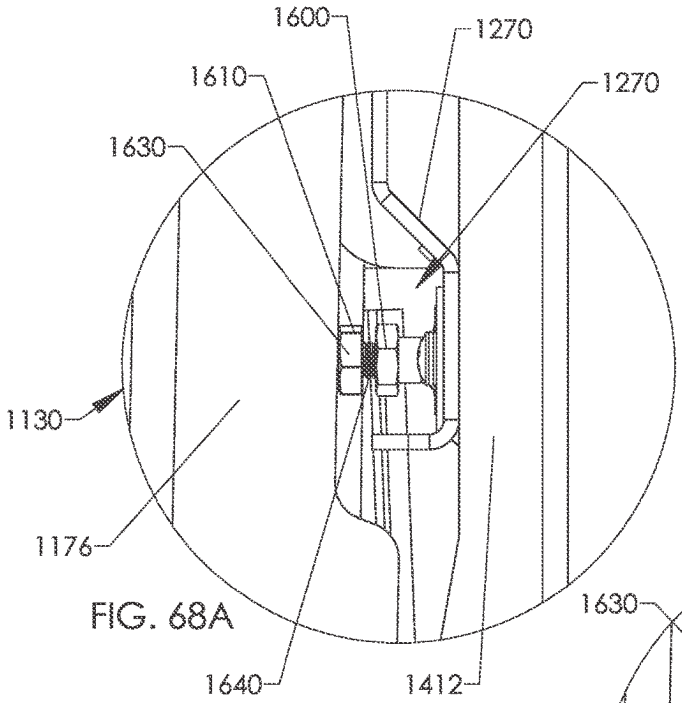

FIG. 68A

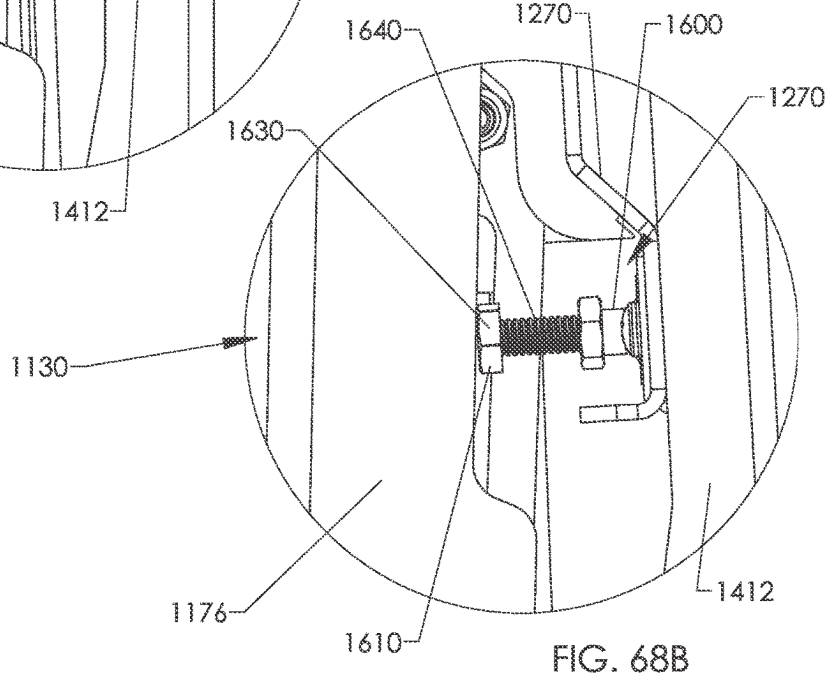

FIG. 68B

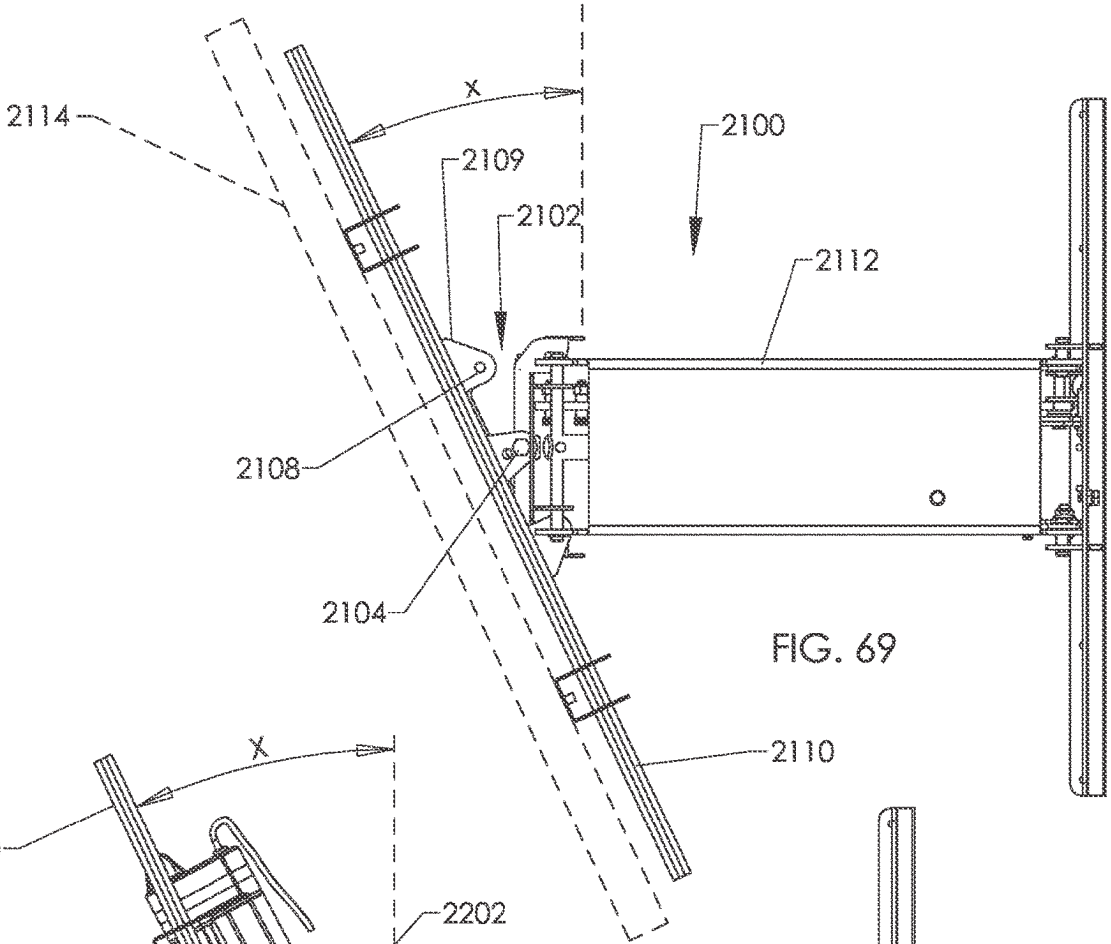
2114
X
2100
2109
2102
2112
2108
2104
2110

FIG. 69

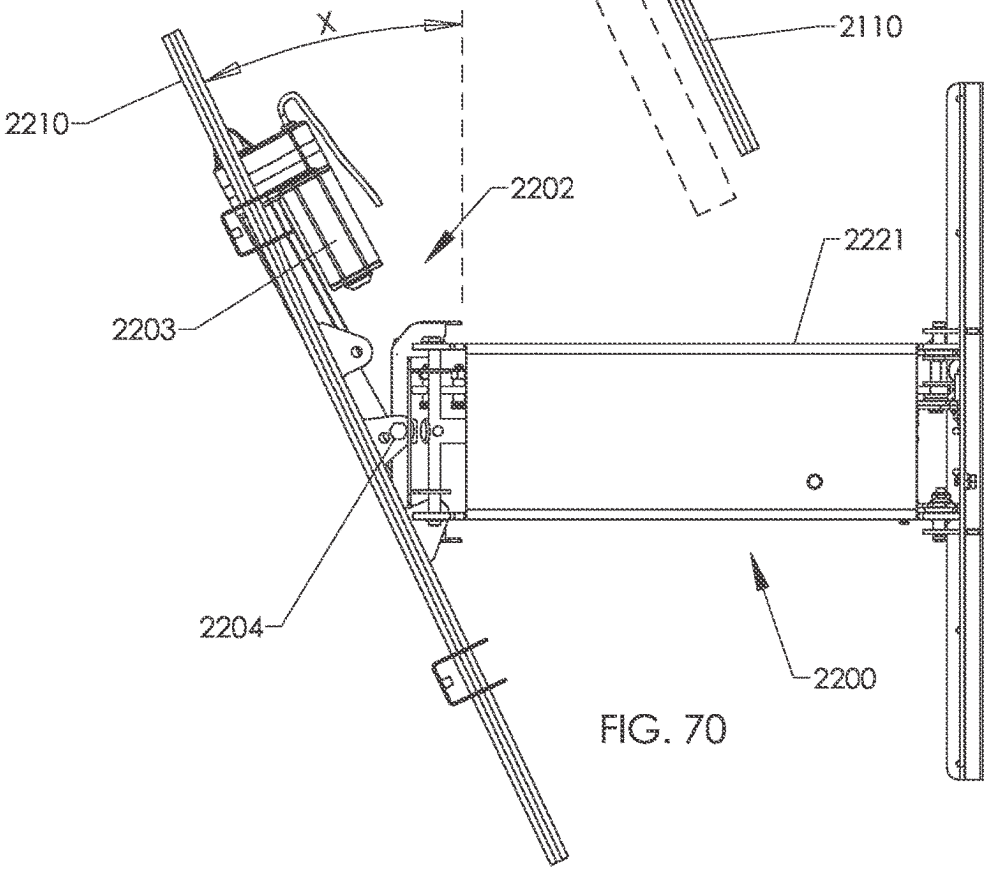
X
2210
2202
2221
2203
2204
2200

FIG. 70

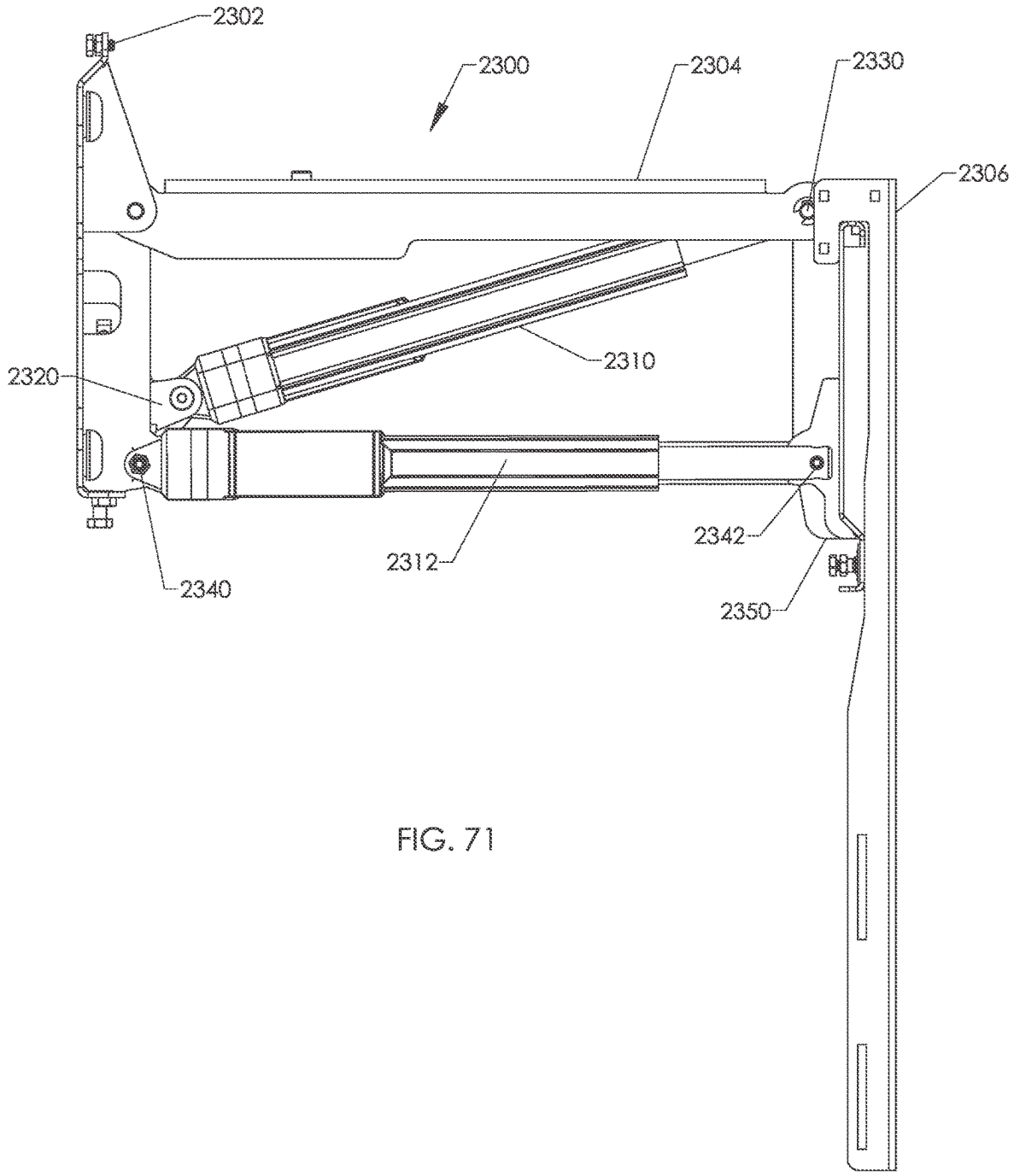

FIG. 71

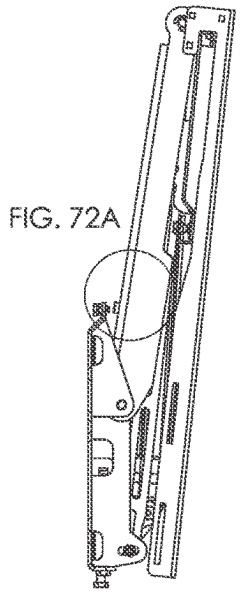

FIG. 72

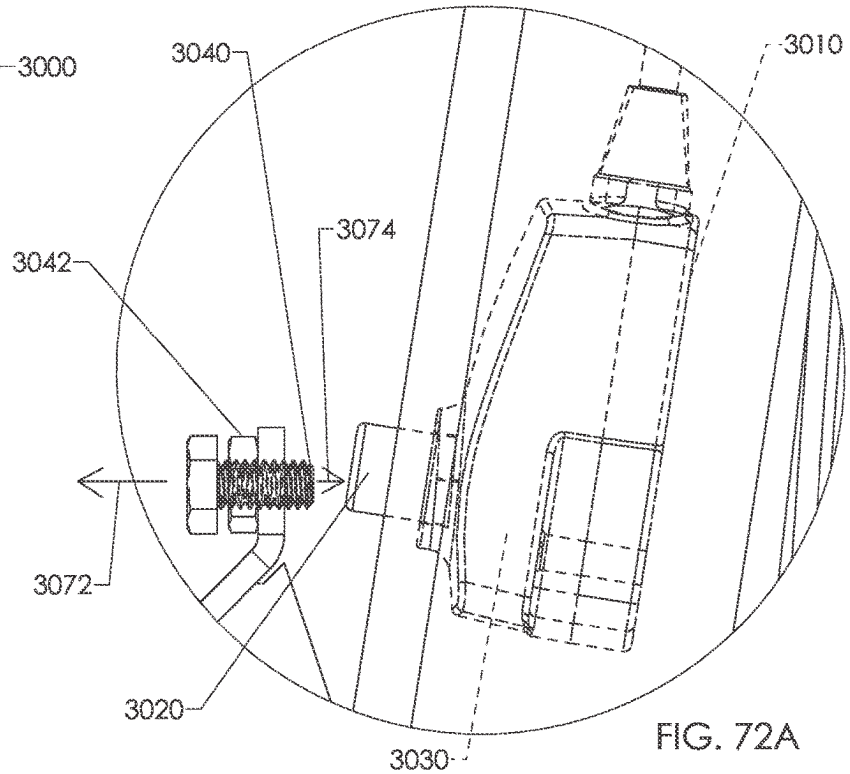

FIG. 72A

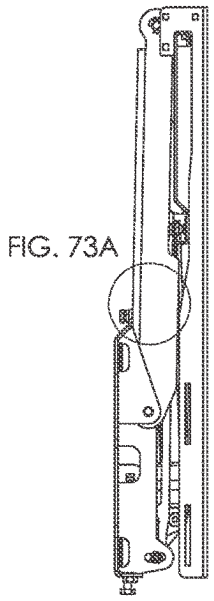

FIG. 73

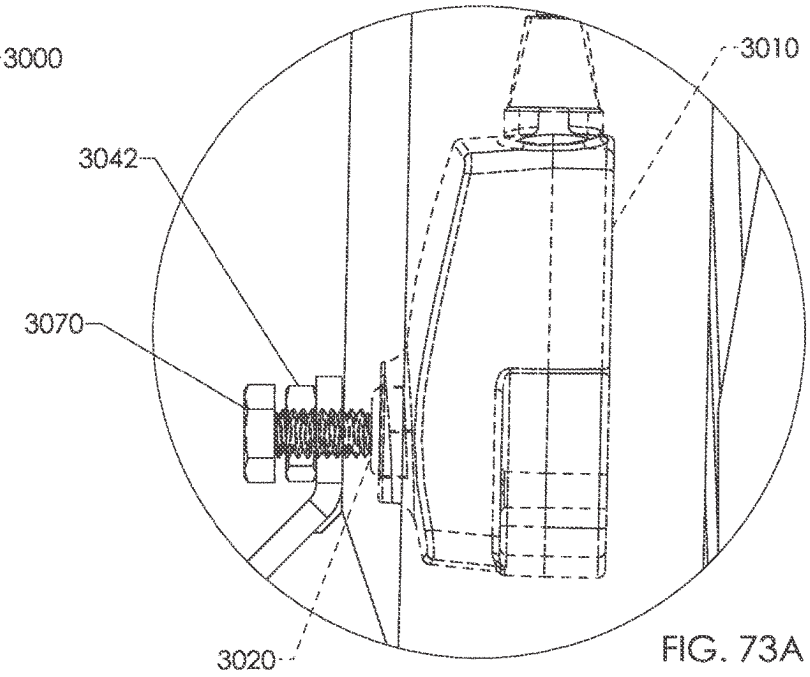

FIG. 73A

ADJUSTABLE MOUNTING SYSTEMS FOR TELEVISIONS

CROSS-REFERENCE TO RELATED APPLICATIONS

This application is a continuation of U.S. patent application Ser. No. 16/924,551, filed Jul. 9, 2020 (Now U.S. Pat. No. 11,460,145), which is a continuation of U.S. patent application Ser. No. 16/370,854, filed Mar. 29, 2019, which is a continuation of U.S. patent application Ser. No. 15/489,596, filed Apr. 17, 2017 (now U.S. Pat. No. 10,281,080), which is a continuation-in-part of U.S. patent application Ser. No. 14/563,842, filed Dec. 8, 2014 (now U.S. Pat. No. 9,625,091), which claims the benefit under 35 U.S.C. § 119(e) of U.S. Provisional Patent Application No. 61/913,195, filed Dec. 6, 2013. U.S. patent application Ser. No. 15/489,596 is also a continuation-in-part of U.S. patent application Ser. No. 14/229,780, filed Mar. 28, 2014 (now U.S. Pat. No. 9,876,984), which is a continuation of U.S. patent application Ser. No. 13/118,297, filed May 27, 2011 (now U.S. Pat. No. 8,724,037), which claims the benefit under 35 U.S.C. § 119(e) of U.S. Provisional Patent Application No. 61/396,850, filed Jun. 4, 2010. All of the above-referenced applications are incorporated herein by reference in their entireties.

TECHNICAL FIELD

The present invention relates generally to mounting systems. More specifically, the present disclosure generally relates to adjustable mounting systems for mounting objects to structures.

BACKGROUND

Televisions are often mounted directly to walls using wall mounts. Tilting wall mounts and full motion wall mounts are two types of mounts that allow movement of televisions. Tilting wall mounts often allow tilting only about a horizontal axis of rotation. Unfortunately, if tilting wall mounts are installed at relatively high locations, there may be limited viewing because ideal viewing often requires that the center of the screen be generally level with a viewer's eyes. Full motion wall mounts often allow the television to be moved horizontally away from walls, swiveling of the television, and/or tilting of the television. Because a viewer looks up at the television, it may result in uncomfortable viewing. If either a tilting wall mount or a full motion wall mount is installed at a high location (e.g., above a fireplace, a piano, furniture, etc.), the mounted television is often much higher than a sitting viewer's eyes and, thus, may not be suitable for comfortable viewing.

SUMMARY

At least some embodiments are directed to mounting apparatuses capable of holding an object at a relatively high location to keep the object out of the way when stowed. The object can be conveniently moved to different locations. In certain embodiments, a mounting apparatus can hold an electronic display in the form of a television and can include components for adjusting the position of the television to provide desired viewing of the television. The mounting apparatus can automatically move the television to a desired viewing position and can include, without limitation, one or more components for allowing a user to smoothly raise or

lower the television. Such components can include one or more springs, pistons (e.g., gas pistons), actuators, tilt adjustment mechanisms, or combinations thereof. Tilt adjustment mechanisms can move the television to a desired angle of tilt for a particular viewing height. As the television is raised and lowered, it can be gradually tilted for optimal viewing.

The mounting apparatus can be installed above, for example, a fireplace, a piano, furniture, or at an aesthetically pleasing location. A user can manually or automatically lower the television such that a viewer's eyes are at an appropriate position relative to the television. For example, the viewer's eyes can be generally level with the screen (e.g., level with the center of the screen). The television can be panned, tilted (e.g., rotated about a generally horizontal axis), and/or swiveled (e.g., rotated about a generally vertical axis) to accommodate different viewing positions. Pivots, swivels (e.g., swivel brackets), joints, or the like can be used to provide the desired motion. The television can range in weight from about 20 pounds to about 110 pounds, for example.

A mounting system, in some embodiments, comprises a mounting apparatus including a bracket configured to hold an object, a fixed support bracket coupleable to a vertical support structure, and a linkage assembly. The linkage assembly has a low-profile stowed configuration in which the object is held close to the support structure. The linkage assembly is movable to reposition the object at different heights. One or more tilt setting mechanisms can be used to change the orientation of links to adjust the tilt of the object. If the object is an electronic display held at a relatively high position, tilt setting mechanisms can be used to angle the electronic display downwardly. For example, the electronic display can be angled such that a viewer's line of sight is substantially perpendicular to a screen of the electronic display. As the electronic display is lowered, the screen can be gradually tilted to keep the screen generally perpendicular to the viewer's line of sight.

A biasing mechanism can facilitate movement of the object and, in some embodiments, can provide a fixed or variable counterbalance force that may be different at the beginning, middle, and/or end of travel. In one embodiment, the biasing mechanism can include one or more springs, counterbalance biasing mechanisms (e.g., a piston, a gas spring, etc.), and/or other force generating devices. The biasing mechanism can provide an initial counterbalance force when compressed and another counterbalance force when it extends. For example, the biasing mechanism can include a spring that can be compressed as the mounting apparatus initially moves. As the spring is compressed, the counterbalance biasing mechanism can provide substantially no counterbalance force. After compressing the spring, the counterbalance biasing mechanism can provide a counterbalance force for a majority of the travel of the television. The counterbalance force provided by the counterbalance biasing mechanism can be greater than the force provided by the biasing mechanism due to compression of the spring. The television can be moved by applying a gradually increasing force for smooth movement.

In some embodiments, a mounting system includes a multi-bar linkage configured to store an object at a raised, low profile position close to the wall (e.g., within 3 inches, 4 inches, 5 inches of the wall). The mounted object can be moved away from the raised, low profile position along a path (e.g., an arcuate path, a partially circular path, a curved path, a partially elliptical path, or the like). The multi-bar linkage can include a main linkage that connects a support

bracket to a display bracket. The mounting system can include a tilt adjustment mechanism that adjusts the position of at least one adjustable link relative to a main linkage and/or the support bracket to adjust the tilt of the display bracket.

The mounting system can include a counterbalance assembly that can be adjusted to provide smooth controlled movement of the mounting system. The counterbalance assembly can include, without limitation, a force adjustment mechanism operable to increase and decrease a counterbalance force. In one embodiment, the force adjustment mechanism can provide a relatively low counterbalance force to allow initial movement of the television. The counterbalance force can be increased (e.g., gradually increased) as the television is further moved toward a desired position. In some embodiments, the counterbalance assembly can provide a relatively low counterbalance force to allow initial upward or downward movement of the television when the television is in the lowered or raised position, respectively.

In further embodiments, a television mounting apparatus has a raised configuration and a lowered configuration and comprises a display bracket, a fixed support bracket, and a linkage assembly. The fixed support bracket is configured to be coupled to a vertical support structure. The linkage assembly is rotatably coupled to the display bracket and rotatably coupled to the fixed support bracket such that a television carried by the display bracket is movable from a raised position to a lowered position by moving the television mounting apparatus from the raised configuration to the lowered configuration. A tilt adjustment mechanism can be used to set the configuration of the television mounting apparatus. The tilt adjustment mechanism, in some embodiments, can be used to increase or decrease tilt of one or more links of the linkage assembly relative to the fixed support bracket to adjust orientation (e.g., tilt) of the television.

In yet further embodiments, a television mounting apparatus for holding a television includes a display bracket, a fixed support bracket configured to couple to a wall, and an assembly rotatably coupled to the fixed support bracket and carrying the display bracket. The assembly is movable relative to the fixed support bracket to move the display bracket between different positions (e.g., a raised position, an intermediate position, a lowered position, etc.).

Some embodiments are a television mounting apparatus that includes a display bracket, a fixed support bracket, and an assembly rotatably coupled to the display bracket and movable relative to the fixed support bracket to move (e.g., raise, lower, pan, etc.) the display bracket. In one embodiment, the television mounting apparatus can include a counterbalance assembly with a counterbalance biasing mechanism configured to provide a biasing force and a force adjustment mechanism operable to increase and decrease the biasing force provided by the counterbalance biasing mechanism.

In some embodiments, a mounting apparatus includes a cam mechanism with different states for controllably tilting a display bracket. For example, the cam mechanism can have a camming state for causing a display bracket to move (e.g., tilt rearward or forward) when the mounting apparatus is reconfigured. In a non-camming or neutral state, the cam mechanism allows the mounting apparatus to move without changing the orientation at the display bracket. This allows the display bracket to translate with either substantially no rotation or with controlled rotation. In the camming state, the cam mechanism can cause the display bracket to rotate forward. Once the display bracket is at the desired orientation, the display bracket can be further lowered while the cam mechanism operates to keep the display bracket at a viewing orientation. This allows the display bracket to remain in substantially the same vertical orientation. When the mounting apparatus is raised back to the raised position, the passive cam mechanism can operate to allow the display bracket to return to its stowed position. The configuration of the passive cam mechanism can be selected to provide the desired amount of tilting of the display bracket for a specific range of travel.

In yet further embodiments, a television mounting apparatus includes a support bracket, a display bracket configured to hold a television, a linkage assembly extending between the support bracket and the display bracket. The linkage assembly can include a link. The television mounting apparatus can further include a support pivot rotatably coupling the linkage to the support bracket, a display pivot rotatably coupling the linkage to display bracket, and a passive cam mechanism. The passive cam mechanism includes a cam and a cam follower that travels along the cam such that (1) the display bracket tilts forward as the linkage assembly moves away from a raised position, (2) the display bracket tilts rearwardly to a viewing orientation as the linkage assembly is lowered, and (3) the display bracket remains substantially at the viewing orientation as the linkage assembly is moved toward a fully lowered position. In some installations, the display bracket remains at a vertical orientation (±5 degrees) as the linkage assembly is moved toward a fully lowered position. In one embodiment, the cam follower can be a passive cam follower that travels along a first section of the cam as the display bracket tilts forward, a second section of the cam as the display bracket remains tilted forward, a third section of the cam as the bracket tilts rearwardly toward the viewing orientation, and a fourth section of the cam as the display bracket remains substantially at the viewing orientation. Additional sections of the cam can provide other motion.

BRIEF DESCRIPTION OF THE DRAWINGS

Non-limiting and non-exhausting embodiments are discussed with reference to the following drawings. The same reference numerals refer to like parts or acts throughout the various views, unless specified otherwise.

FIG. **1** is an isometric view of a television held by a mounting system connected to a wall.

FIG. **2** shows a television installed above a fireplace.

FIG. **3** shows the television in a lowered position in front of the fireplace.

FIG. **4** is an isometric view of a mounting system in accordance with one embodiment.

FIG. **5** is a top plan view of the mounting system of FIG. **4**.

FIG. **6** is a side elevational view of the mounting system of FIG. **4**.

FIG. **7** is an isometric view of the mounting system with an upper arm shown removed.

FIG. **8** is a cross-sectional view of the mounting system taken along a line **8-8** of FIG. **5**.

FIG. **9** is a side elevational view of the mounting system in a stowed configuration.

FIG. **10** is a side elevational view of the mounting system in a deployed expanded configuration.

FIG. **11** is a side elevational view of a television in a lowered position.

FIG. **12** is a top plan view of the stowed mounting system.

FIG. **13** is a side elevational view of the stowed mounting system of FIG. **12** holding a television.

FIG. **14** is a back elevational view of the stowed mounting system of FIG. **12**.

FIG. **15** is a front elevational view of the stowed mounting system of FIG. **12**.

FIG. **16** is a side elevational view of the stowed mounting system holding a television generally parallel relative to a wall.

FIG. **17** is a side elevational view of the stowed mounting system holding a television tilted downwardly.

FIG. **18** is an isometric view of a mounting system, in accordance with another embodiment.

FIG. **19** is a side elevational view of the mounting system of FIG. **18** in a stowed configuration.

FIG. **20** is a detailed view of a positioner of FIG. **19**.

FIG. **20**A is a detailed view of the positioner in an extended configuration.

FIG. **21** is a side elevational view of the mounting system of FIG. **18** in a deployed configuration.

FIG. **22** is a detailed view of the positioner of FIG. **21**.

FIG. **23** is a side elevational view of the mounting system of FIG. **18** holding a television at a lowered position.

FIG. **24** is a detailed view of the positioner.

FIG. **25** is a top plan view of the mounting system of FIG. **18**.

FIG. **26** is a rear, top, and left side isometric view of the mounting system of FIG. **18**.

FIG. **27** is a top plan view of a mounting system in accordance with another embodiment.

FIG. **28** is a side elevational view of a motorized mounting system in accordance with one embodiment.

FIG. **29** is an isometric view of a mounting system with a counterbalance assembly and tilt adjustment mechanisms in accordance with one embodiment.

FIG. **30** is a front view of the mounting system of FIG. **29**.

FIG. **31** is a side view of the mounting system of FIG. **29**.

FIG. **32** is a detailed view of a tilt adjustment mechanism of FIG. **31**.

FIG. **33** is a cross-sectional view of the mounting system taken along a line **33-33** of FIG. **30**.

FIG. **34** is a detailed view of the tilt adjustment mechanism of FIG. **33**.

FIG. **35** is a cross-sectional view of the mounting system taken along a line **35-35** of FIG. **30**. The mounting system is in a downward tilt position.

FIG. **36** is a detailed view of the tilt adjustment mechanism of FIG. **35**.

FIG. **37** is a side elevational view of the mounting system in a partially raised configuration.

FIG. **38** is a detailed view of the tilt adjustment mechanism of FIG. **37**.

FIG. **39** is a side view of the mounting system in a partially raised configuration.

FIG. **40** is a side view of the mounting system in a partially lowered configuration.

FIG. **41** is a front, top isometric view of a mounting system mounted on a wall in accordance with one embodiment.

FIG. **42** is a front, bottom isometric view of the mounting system of FIG. **41** without display brackets.

FIGS. **43-48** illustrate a mounting system in various positions.

FIG. **49** is a front view of a mounting system in a raised configuration.

FIG. **50** is an isometric view of a mounting system in the raised configuration.

FIG. **51** is a detailed view of a carriage assembly in accordance with one embodiment.

FIG. **52** is an isometric view of a carriage and a carriage positioner in accordance with one embodiment.

FIGS. **53** and **54** show the carriage in different positions.

FIG. **55** is a side view of a mounting system at an intermediate position in accordance with one embodiment.

FIGS. **56** and **57** are detailed views of a bottom tilt mechanism in different configurations in accordance with one embodiment.

FIG. **58** is an isometric view of the bottom tilt mechanism in accordance with one embodiment.

FIG. **59** is a front view of the bottom tilt mechanism of FIG. **58**.

FIGS. **60** to **62**A illustrate a mounting system in different configurations in accordance with one embodiment.

FIG. **63** is an isometric view of a display bracket in accordance with one embodiment.

FIG. **64** is a side view of a mounting system moved from a stowed configuration, and FIG. **64**A is a detailed view of a cam mechanism in accordance with one embodiment of the technology.

FIG. **65** is a side view of a mounting system being lowered, and FIG. **65**A is a detailed view the cam mechanism in accordance with an embodiment of the technology.

FIG. **66** is a side view of the mounting system at a horizontal configuration, and FIG. **66**A is a detailed view of the cam mechanism in accordance with one embodiment of the technology.

FIG. **67** is a side view of the mounting system at a lowered configuration, and FIG. **67**A is a detailed view of the cam mechanism in accordance with one embodiment of the technology.

FIG. **68** is a side view of a mounting system in a raised position in an accordance with one embodiment.

FIGS. **68**A and **68**B are detailed views of a top or stowed tilt mechanism in different configurations.

FIGS. **69** and **70** are top views of mounting systems with swivelable display brackets.

FIG. **71** is a side view of a mounting system in accordance with one embodiment.

FIG. **72** is a side view of a mounting system in accordance with another embodiment.

FIG. **72**A is a detailed view of the mounting system of FIG. **72**.

FIG. **73** is a side view of a mounting system in a fully raised configuration.

FIG. **73**A is a detailed view of the mounting system of FIG. **72**.

DETAILED DESCRIPTION

FIG. **1** shows a mounting system in the form of a television mounting apparatus or wall mount **100** ("wall mount **100**") carrying an electronic display in the form of a flat screen television **110**. A collapsible linkage assembly **130** is connected to a support mount or bracket **140** that is mounted to a support structure in the form of a wall **120**. The linkage assembly **130** can swing upwardly (indicated by arrow **150**) or downwardly (indicated by arrow **152**). An adjustment mechanism **146** is operable to adjust a biasing force provided by a biasing mechanism to allow for controlled movement of the television **110**. Once the television **110** is at a desired position, the biasing mechanism keeps the television **110** stationary.

FIG. **2** shows the television **110** in a raised, stowed position and very close to the wall **120**. The wall mount **100** is hidden from view of someone in front of the television **110** for an aesthetically pleasing appearance. Advantageously, it

may be difficult for small children to reach up and pull down on the television **110**. The illustrated stowed television **110** is positioned above a fireplace to avoid occupying usable space and to reduce the likelihood of unwanted inadvertent contact by people moving about the room. If the fireplace includes a hearth, it may be difficult for small children, or other individuals, to inadvertently contact the television **110**.

The television **110** can swing downwardly and, if desired, can be positioned in front of the fireplace, as shown in FIG. **3**. The lowered television **110** can be positioned very close to the front of the fireplace. A viewer's eyes can be generally level with the center of the screen **160**. The lowered television **110** is especially well suited for viewing when someone is positioned near the television **110**, for example, to play a game system (e.g., Xbox 360, PlayStation®, PlayStation®2, PlayStation®3, Nintendo game system, or the like) or to provide convenient viewing while sitting, for example, on furniture or on the floor. After viewing, the television **110** can be returned to the stowed position.

Referring again to FIG. **2**, a top **132** of the stowed television **110** can be angled forwardly such that the screen **160** is substantially perpendicular to a sitting viewer's line of sight. Alternatively, the television **110** can be flat against the wall **120** (e.g., parallel to the wall **120**) to minimize or limit unwanted reflections from the screen **160** that may be directed to someone sitting on furniture in front of the television **110**, especially when the television **110** is turned OFF. The wall mount **100** can automatically tilt the television **110** as the television **110** moves vertically. As the television **110** is lowered, it can gradually tilt to keep the screen **160** substantially perpendicular relative to the viewer's line of sight. Once the television **110** is at a desired position, the television **110** can be further tilted using an automatic or manual tilt mechanism, if needed or desired.

In some manually deployable embodiments, a user can conveniently grasp and pull the television **110** away from the wall **120**. The television **110** will move forward a significant distance before it starts to move down such that the television **110** can be brought down and in front of a protruding object below the support bracket **140**, illustrated in FIGS. **2** and **3** as a fireplace mantel or shelf **124**. The top **132** of the television **110** can be lower than a top **141** of the support bracket **140** and, in some embodiments, is positioned lower than a bottom **143** of the support bracket **140**. One or more adjustable fixed stops can be used to prevent contact with the mantelshelf **124** or to achieve repeatable positioning, or both.

The wall mount **100** can be coupled to a wide range of different types of support structures, such as vertical support structures in the form of walls of a dwelling (e.g., a house, an apartment, etc.), an office, a lobby, a bar (e.g., a sports bar), or the like and can be mounted to vertical walls or non-vertical walls, including, without limitation, angled walls, non-planar walls, or other structures sturdy enough to handle the load of the wall mount **100** and any attached object(s).

The television **110** can be, without limitation, a liquid crystal display (LCD) television, a plasma television, a light emitting diode (LED) television, or other type of flat screen television, as well as other types of wall mountable televisions. The weights of such televisions are often in a range of about 20 lbs to about 110 lbs and often have a maximum thickness less than about 5 inches. Advantageously, large screen televisions have a screen with a length (measured diagonally) equal to or greater than about 30 inches and can hide the entire wall mount **100**, as shown in FIG. **2**. The wall mount **100** can also hold small or medium screen televisions. Other types of electronic displays (e.g., monitors) or objects can be carried by the wall mount **100**. Exemplary mountable objects include, but are not limited to, screens suitable for use with front projectors, boards (e.g., a chalk board, a dry erase board, etc.), containers (e.g., a basket or a bin), or the like.

FIGS. **4-6** show the support bracket **140**, a display bracket **210**, and the linkage assembly **130** that cooperate to define a four bar linkage. The support bracket **140** can include a pair of spaced apart elongate members **170**, **172**, each including a plurality of apertures for receiving fasteners, such as fasteners **174** in FIG. **1**. As used herein, "bracket" is a broad term that includes one-piece or multi-piece structural supports configured to be coupled (e.g., fixedly coupled) to a support surface or structure. Brackets can be made, in whole or in part, of metal (e.g., steel, aluminum, etc.), composites, plastic, polymers, combinations thereof, or the like. In one-piece embodiments, a bracket can be formed using a stamping process, a machining process, or the like. In multi-piece embodiments, separate pieces can facilitate packaging for shipping. The pieces can be assembled after unpacking. Other types of one-piece or multi-piece brackets can be used, if needed or desired.

Referring to FIGS. **4** and **5**, wall mount **100** is symmetrical with respect to a center plane **173** and, thus, may be described with reference to one side. A main bearing member in the form of an upper link **176** is rotatable about an upper axis of rotation **180** defined by support pivots **190**. A pair of lower links **178***a*, **178***b* (collectively "**178**") are rotatable about a lower axis of rotation **182** defined by support pivots **192**. The axes of rotation **180**, **182** can lie in an imaginary plane which is substantially parallel to the wall **120**.

The upper link **176** can include a support end **200** and an opposing bracket end **204**. Pivots **190** couple the support end **200** to the bracket **140**. Pivots **211** couple the bracket end **204** to the display bracket **210** and can serve as display pivots. The upper link **176** has a fixed length and a generally U-shaped transverse cross-section taken generally perpendicular to its longitudinal axis **177**. Sidewalls **216**, **217** are connected to an upper plate **218**.

The lower links **178** are generally similar to one another and, accordingly, the description of one lower link applies equally to the other, unless indicated otherwise. The lower link **178***a* includes a support bracket end **222** rotatably coupled to the support bracket **140** by the pivot **192**. FIG. **6** shows a pivot **230** coupling the display bracket end **224** to the display bracket **210** and defining an axis of rotation **183**.

With reference to FIG. **6**, the link **178***a* includes rigid slotted members **232**, **234** and pins extending through the members **232**, **234**. The slotted members **232**, **234** are slidable relative to one another. An adjustment mechanism in the form of a tilt adjustment mechanism **240** is slidably retained in a slot of the member **232** and a hole in the member **234**. A handle **242** can be rotated to lock and unlock the link **178***a*. To lengthen the link **178***a*, the handle **242** is rotated counter-clockwise and the member **232** is slid away from the support bracket **140**, as indicated by an arrow **246**. The length of the link **178***a* can be increased to rotate the display bracket **210** clockwise (indicated by an arrow **254**) about a tilt axis of rotation **250** (FIG. **5**) defined by the pivots **211**. The display bracket **210** can be rotated counter-clockwise about the tilt axis of rotation **250** (indicated by an arrow **256**) by sliding the member **232** in the opposite direction. After the television **110** is in the desired orientation, the handle **242** is rotated clockwise to securely hold the member **232** between the member **234** and the handle **242**. The

dimensions (e.g., the longitudinal lengths) of the slots can be increased or decreased to increase or decrease the amount of tilt. Other locking mechanisms can include, without limitation, one or more rollers, slides (e.g., linear slides), locks, clamps, pins, ratchet mechanisms, or combinations thereof that cooperate to prevent, limit, or inhibit relative movement between components.

Referring to FIGS. **4** and **5**, display bracket **210** includes a rail **270** and elongate arms **272**, **274** hanging on the rail **270**. The arms **272**, **274** can be slid along the rail **270**, as indicated by arrows **276**, **277**, **278**, **279**, to accommodate different sized objects. Fasteners **275**, **276** fixedly couple the elongate arms **272**, **274** to the rail **270**. Fasteners can pass through apertures in the elongate arms **272**, **274** to hold the television **110**. Other types of display brackets can also be used. The configuration, size, and design of the display bracket can be selected based on the configuration, size, and design of the television or other object to be mounted.

FIG. **7** shows the wall mount **100** with the upper link removed. A biasing mechanism in the form of a counterbalance mechanism **300** cooperates with the linkage assembly **130** to allow a user to effortlessly move the television to different positions but prevents or inhibits movement of the television when the user does not apply a force. The television can be moved using a force that is less than a threshold force. The threshold force can be about 2 lbf., 3 lbf., 5 lbf., 10 lbf., or 20 lbf., as well as any other suitable threshold force. In some embodiments, counterbalance mechanism **300** counterbalances the weight of the television and the weight of the suspended components in order to allow movement with a desired amount of resistance (e.g., a minimal amount of resistance, a threshold amount of resistance, etc.). The counterbalance mechanism **300** can include force balancing devices, illustrated as pistons **310**, **320** rotatably coupled to the display bracket **210** and support bracket **140**. The pistons **310**, **320** can be gas pistons, pneumatic pistons, or other type of biasing devices capable of providing a desired force, including, without limitation, a substantially constant force, variable force, or the like.

Referring to FIGS. **7** and **8**, force adjustment mechanism **146** includes a threaded rod **330** held by holders **338**, **340** of the support bracket **140**. The rod **330** can be rotated to move a carriage or block **332** upwardly or downwardly. The carriage **332** is rotatably coupled to the counterbalance mechanism **300** and can be in a first position such that the counterbalance mechanism **300** is in a first setting or configuration to provide a first balancing force. The carriage **332** can be moved to a second position such that the counterbalance mechanism **300** is in a second setting or configuration to provide a second balancing force that is substantially different from the first balancing force. For example, the first balancing force can counterbalance a television that weighs about 100 pounds wherein the second balance force can counterbalance a television that weighs about 40 pounds. Other types of force adjustment mechanisms can include, without limitation, one or more motors (e.g., stepper motors), linear slides, threaded rods, pulleys, combinations thereof, or the like.

FIGS. **9**, **10**, and **11** show the television **110** in a stowed position, an intermediate position, and a lowered position, respectively. The linkage assembly **130** of FIG. **9** is in a substantially upright position. The lower links **178** move away from and remain substantially parallel to the upper link **176** as the television **110** moves away from the wall **120**. FIG. **10** shows the linkage assembly **130** in an expanded configuration and extending substantially horizontally away from the support bracket **140**. FIG. **11** shows the linkage assembly **130** in a lowered configuration and extending downwardly away from the support bracket **140**. Details of the illustrated positions are discussed below.

Referring to FIG. **9**, wall mount **100** has a relatively low-profile configuration to minimize a distance D between the television **110** and the support surface **120**. In some embodiments, distance D is less than about 8 inches, 6 inches, 5 inches, 4 inches, or 2 inches. Other distances D are also possible. The upper link **176** and lower links **178** nest together to provide a space saving and aesthetically pleasing low profile configuration.

As the television **110** is moved downwardly along a predetermined path **331**, it can tilt backwardly (e.g., rotate clockwise as viewed from the side) such that the screen is angled upwardly, as illustrated in FIGS. **10** and **11**. The wall mount **100** can also be modified to be a five bar linkage to provide such motion. The television **110** of FIG. **11** is especially well positioned for viewers with their heads positioned slightly above the center of the screen. Alternatively, television **110** can be moved along the path **331** without appreciably changing the tilt setting. For example, the center gravity (CG) of the television **110** can travel along the generally arcuate path **331** without appreciable rotation or angular displacement of the television **110**. Thus, television **110** can be translated or rotated, or both.

The upper link **176** and lower links **178** can rotate about respective axes of rotation **182**, **180** from about 130 degrees to about 180 degrees. In some embodiments, the upper link **176** and lower links **178** rotate about the respective axes of rotation **182**, **180** about 160 degrees. If the television **110** is mounted above a fireplace, upper link **176** and lower links **178** can rotate about respective axes of rotation **182**, **180** an angle in a range of about 90 degrees to about 160 degrees. Other angles are also possible, if needed or desired.

FIGS. **12-15** show the linkage assembly **130** in a substantially upright position. The lower links **178** are alongside and laterally adjacent to the upper linkage **176**. FIG. **13** shows at least a portion of the lower link **178*a*** positioned in front of the upper link **176** as viewed along the lower axis of rotation **182**. As shown in FIGS. **14** and **15**, upper link **176** is positioned between the lower links **178*a***, **178*b***. Such a nested arrangement provides a relatively low profile to position the mounted object very close to a wall.

FIGS. **13**, **16**, and **17** show the linkage assembly **130** in an over-center configuration. The CG of the television **110** and the axis of rotation **183** are on opposite sides of an imaginary plane **340**. The lower inner axis of rotation **182** and tilt axis of rotation **250** lie in the imaginary plane **340**. Gravitational force acting on the television **110** causes the pivots **230** to be pushed towards the wall **120** to keep the linkage assembly **130** in the stowed configuration. A locking mechanism **245**, illustrated as a locking knob mechanism, can be tightened to ensure that the linkage assembly **130** remains locked. The locking mechanism **245** can comprise a handle with a threaded member. The handle can be rotated to press the link **178** against a portion of the bracket **210** to prevent or inhibit relative movement between the link **178** and the bracket **210**. In other embodiments, the locking mechanism **245** can be in the form of a fine tune tilt adjustment mechanism and can include one or more gears, ratchet mechanisms, or other features that allow controlled tilting.

When the linkage assembly **130** is in an unlocked state, the bottom of the television **110** can be pulled away from the support bracket **140** to move the pivots **230** away from the wall **120** and across the imaginary plane **340**. Once the

pivots **230** move across the imaginary plane **340**, the linkage assembly **130** is released, thus allowing lowering of the television **110**.

The lengths of the links **178** of FIG. **16** may be decreased to rotate the television **110** counterclockwise about the axis of rotation **250** so as to move the bottom of the television **110** rearwardly. The links **178** of FIG. **17** can be lengthened to tilt the top of the television **110** rearwardly. In various embodiments, television **110** can be tilted an angle α (FIG. **17**) of about ±5 degrees to about ±55 degrees. In certain embodiments, a tilt angle α of about 15 degrees can be achieved.

FIGS. **18** and **19** show a mounting system **400** that is generally similar to the mounting system **100** discussed in connection with FIGS. **1-17**, except as detailed below. A positioner **410** includes a base **416** and a movable member in the form of an adjustment screw **418**. The adjustment screw **418** has external threads that engage internal threads along a passageway in the base **416**. A head **421** can limit travel of a pivot **412** along a slot **430**, illustrated in phantom line in FIGS. **20** and **20**A.

Referring again to FIG. **19**, linkage assembly **420** is in a stowed configuration. Pivot **412** is forced towards a forward lower end **432** of the slot **430**. As a display bracket **440** is moved downwardly, pivot **412** can slide rearwardly and upwardly along the slot **430**. FIGS. **21** and **22** show the pivot **412** positioned at a rearward upper end **434** of the slot **430**. Referring to FIGS. **23** and **24**, pivot **412** is at the rearward upper end **434** of the slot **430**. The load applied by a mounted object pushes the pivot **412** towards the rearward upper end **434**.

The illustrated head **421** can be moved by rotating the adjustment screw **418**. By moving the adjustment screw **418** into and out of the base **416**, tilt of the mounted object can be adjusted. For example, adjustment screw **418** can be moved outwardly away from the wall to tilt the display bracket **440** rearwardly. The link **438** has elongate members **441**, **443** that can be moved relative to one another to provide large amounts of adjustment. A locking mechanism **443** can be tightened using a wrench or other tool to lock the linkage **438**. In the illustrated embodiment, a pin **445** extends through a slot in the elongate member **443** and a hole in the elongate member **441**.

The positioner **410** can function as a mode of operation selector to alternate the mounting system **400** between a four bar linkage system and a five bar linkage system. As shown in FIG. **20**A, when the adjustment screw **418** is in an extended position, pivot **412** is translationally fixed. The mounting system **400** thus functions as four bar linkage system. When the adjustment screw **418** is moved into the base **416** to allow translation of the pivot **412** along the slot **430**, the mounting system **400** functions as a five bar linkage system.

FIGS. **25** and **26** show a display bracket **480** rotatable about an axis of rotation **482**, illustrated as a vertical axis of rotation, defined by a swivel mechanism **483**. The swivel mechanism **483** includes a pin **484** held by a retainer **486** and mounts **490**, **492**. The mounts **490**, **492** and/or retainer **486** can have slots, holes, or other types of features to allow different types of pivoting or swivel action. The display bracket **480** can be rotated to the left and right an angle ß of about ±5 degrees to about ±55 degrees.

Mounting systems can include any number of swivel mechanisms. For example, swivel mechanisms can couple links to the support bracket and can couple the links to the display bracket. The number, positions, and orientations of the swivel mechanisms can be selected to achieve the desired functionality. FIG. **27** shows a wall mount **600** that includes a swivel mechanism **624** that connects a linkage assembly **628** to a support bracket **632**. The swivel mechanism **624** includes a pin **638** held by a mount **620**. A retainer **630** pivots with respect to the pin **638** to rotate about an axis of rotation **610**. The linkage assembly **628** can be rotated to the left and to the right an angle θ of about ±5 degrees to about ±30 degrees. Other angles are also possible, if needed or desired. Relevant description of the wall mount **600** applies equally to swiveling mounting systems discussed in connection FIGS. **69** and **70**.

FIG. **28** shows an automated mounting system **700** that can be moved using a controller **510** that communicates with a control device **720**. A motorized actuator **730** raises and lowers the television. The control device **720** can include a receiver that is communicatively coupled (e.g., wirelessly coupled, capacitively coupled, inductively coupled, or the like) to a transmitter of the controller **710**. The control device **720** can store information in memory **721** and can include one or more computing devices or processors. Memory can include, without limitation, volatile memory, non-volatile memory, read-only memory (ROM), random access memory (RAM), and the like. Stored information can include, but is not limited to, settings, weight of mounted object, or the like. Settings can include, but are not limited to, position settings (e.g., stowed positions, lowered positions, intermediate positions, or the like), times (e.g., times to automatically move the object), or the like.

The controller **710** can be a wireless controller with artificial intelligence functionality or other suitable functionality. For example, the controller **710** can include or be compatible with hubs or automation devices (e.g., Google Home, Amazon's Alexa, etc.), or suitable device for receiving input from users. Voice commands can be used to raise and lower the mounting system, set mounting system positions, program mounting systems, or the like. In some embodiments, the controller **710** can communicate wirelessly or via a wired connection with another device, such as an IoT hub or digital assistant (e.g., Google Home, Microsoft Cortana, Amazon Alexa, etc.). Wireless communication can be via a local network (e.g., WiFi network) or other suitable network. Additionally or alternatively, the control device **720** can communicate with a hub, router, or electronic controller, such as Google Home, Amazon Echo, or the like. In some embodiments, the mounting system **700** can be controlled with one or more voice commands, such as "Siri" (Apple), "Alexa" (Amazon), "Cortana" (Microsoft), Xbox, "OK Google" Google, and so forth. A button on the controller **710** can be used to input voice commands. The control device **720** can have one or more voice detectors (e.g., microphones) that operates to receive voice commands.

The control device **720** can communicate directly with any number of communication devices and may include one or more sensors for detecting movement, position, temperatures, combinations thereof, or the like. By way of example, the control device **720** can include motion sensors configured to detect motion, such as gestures. Position sensors can be used to detect the position of obstacles. The control device **720** can have proximity sensors for detecting the position of viewers, motion, or the like. Viewer motion and position can be tracked to identify command gestures, positional information (e.g., optimum viewing positions), and so forth. In one embodiment, the control device **720** includes one or more cameras for determining the position of viewers, identifying objects, etc., and the control device **720** can determine the optimal display location using view-

ing algorithms. Identification software (e.g., facial recognition software) can be used to identify different people and to retrieve appropriate positions. Viewers can have different preferred positions stored in memory **721**.

Microphones can receive audible information. The control device **720** can be programmed to operate in response to the audible input (e.g., voice commands), determine the location of obstacles, and/or avoid striking obstacles (e.g., shelves, pianos, furniture, or other obstacles). Additionally or alternatively, one or more safety sensors can be utilized and can be incorporated into components of the wall mount system. Additionally or alternatively, the control device **720** can be programmed to move the display to various locations based upon, for example, the location of viewers, time settings, schedules, or voice commands. A timer can be used to determine when to automatically raise or lower the display. In some embodiments, authentication can be required to move the display. For example, the mounting system **700** can be actuated only when an authorization password or other identifier is provided. This way children or other individuals cannot move the display.

Operation of the mounting system **700** can be coordinated with media content, including music, television show, movie, video game, or other suitable media. In one mode of operation, the mounting system **700** can identify the start of the media (e.g., a movie, sports game, etc.) and can automatically position the display at a suitable viewing position. At the end of the content (e.g., completion of the movie, game, etc.), the wall mount **700** can automatically be raised to the stowed position. When one mounting system **700** is moved, it can send data to one or more other mounting systems. The data can include setting information, instructions, commands, or the like.

Mounting systems can be programmed to have coordinated operation. Each control device can have stored instructions and can communicate with each other via wired or wireless connections. In some embodiments, the mounting systems communicate with each other via a local network. Control devices can be programmed to move mounting systems according to one or more cycles or events. In commercial settings, mounting systems can periodically move to attract attention at, for example, a restaurant, a sports bar, or the like.

If the mounting system **700** is mounted above a mantelshelf, the control device **720** can be programmed to ensure that the mounting system does not strike the mantel (e.g., an upper surface of the mantelshelf) as a television is lowered downwardly past the mantelshelf. At a predetermined time (e.g., after a selected bed time), the mounting system **700** can be automatically moved to the stowed configuration such that children cannot easily reach and pull on the television the next morning. In some embodiments, the mounting system **700** can be automatically returned to the stowed configuration after the television has been turned OFF for a certain period of time.

The control device **720** can be programmed to move the television to different positions, each having a different indicator (e.g., number, code, etc.). The indicator can be entered using the controller **710**. Additionally or alternatively, control device **720** can include input devices, such as a touch pad, a touch screen, a keyboard, or the like. A user can use the input device to move the mounting system **700** into different positions without utilizing any remote. If the control device **720** is hidden behind a television, the user can reach behind the television to access the control device **720** and position the television as desired. The controller **710** can be a phone (e.g., Smartphone), tablet, computer, or other suitable electronic device for controlling motorized tilt mechanisms, motorized swivels, or other components.

FIGS. **29** and **30** are isometric and side views, respectively, of a mounting system **750** in accordance with another embodiment. The mounting system **750** is generally similar to the mounting systems discussed in connection with FIGS. **1-28**. The mounting system **750** can be a television mounting apparatus that includes a display bracket **760**, a fixed support bracket **762**, and a collapsible linkage assembly **764**. The display bracket **760** can be configured to hold an electronic display, and the fixed support bracket **762** can be coupled to a mounting structure, such as a vertical wall. The linkage assembly **764** is coupled to the display bracket **760** and the fixed support bracket **762** and can include links that provide, for example, four-bar linkage action, five-bar linkage action, or other types of action. In some embodiments, the linkage assembly **764** includes a main upper link **768** ("upper link **768**") and links **769***a*, **769***b* (collectively "links **769**"). The upper link **768** is rotatable relative to the display bracket **760** about an upper axis of rotation **791** defined by upper pivots **793** and is rotatable about a lower axis of rotation **795** (FIG. **30**) defined by lower pivots **797**. The links **769** are rotatable relative to the display bracket **760** about an upper axis of rotation **808** (FIG. **31**) defined by upper pivots **809** (FIG. **31**) and are rotatable about a lower axis of rotation **802** (FIG. **30**) defined by lower pivots **803**.

FIGS. **29** and **30** show the mounting system **750** including tilt adjustment mechanisms **770**, **772** and a biasing mechanism in the form of a counterbalance mechanism **780**. The tilt adjustment mechanisms **770**, **772** can be used to adjust the positions of the pivots **793**, **797**, **803** (FIG. **30**) and/or **809** (FIG. **31**) to position the display bracket **760**. The tilt adjustment mechanisms **770**, **772** can be operated independently of one another to independently set the tilt of the television at the raised and lowered positions.

The two tilt adjustment mechanisms **770** are operable to set the tilt of the television in the raised position, and the two tilt adjustment mechanisms **772** are operable to set the tilt of the television in the lowered position. For example, a viewer's eyes may be positioned much lower than the television when the mounting system **750** is in a raised or stowed configuration. The tilt adjustment mechanisms **770** can be used to move the pivots **803** to tilt the television downwardly to provide a desired or convenient viewing angle. FIGS. **31-34** show the tilt adjustment mechanism **770** at a minimum top tilt setting to provide a minimum tilt angle of a television **890** (FIGS. **31** and **33**). FIGS. **35** and **36** show the tilt adjustment mechanism **770** at a maximum top tilt setting to provide a maximum tilt angle of the television **890**. As the television **890** is lowered, it can gradually tilt to ensure that its screen remains at a desired orientation relative to viewer(s) (e.g., generally perpendicular to a viewer's line of sight).

FIGS. **29** and **30** show the counterbalance mechanism **780** configured to provide a counterbalance force that allows a user to conveniently raise and lower the television but prevents or inhibits movement of the television when the user does not apply a force. The counterbalance mechanism **780**, in some embodiments, provides variable resistance to allow a user to smoothly move the television. For example, the counterbalance mechanism **780** can provide a relatively low counterbalance force to allow initial upward or downward movement of the television. Referring to FIG. **30**, the counterbalance mechanism **780** can include springs **810**, **812** (FIG. **30**) that are compressed in response to initial movement of the television. After compressing one of the springs

810, **812**, one or more gas spring **813** of the counterbalance mechanism **780** can operate to allow further movement of the television.

FIG. **31** is a side view of the mounting system **750**. FIG. **32** is a detailed side view of the tilt adjustment mechanism **770**. Referring to FIGS. **31** and **32** together, the tilt adjustment mechanism **770** can include a cam **820** and a tilt adjustment element in the form of a bolt **862** ("tilt adjustment bolt **862**") for locking the cam **820**. The cam **820** is positioned between a bracket **830** of the fixed support bracket **762** and the link **769***b* and can contact a back plate **822** of the support bracket **762**. Referring now to FIG. **32**, the cam **820** can rotate about a pin **860**. By way of example, the tilt adjustment bolt **862** can be rotated clockwise such that a bolt head **901** securely holds the cam **820** against the link **769***b*. The bolt **862** can be rotated counterclockwise (indicated by arrow **903**) to release the cam **820**. The cam **820** can then be rotated about the pin **860**, and once the cam **820** is at the desired position, the bolt **862** can be rotated clockwise to lock the cam **820**. Other types of components and mechanisms can be used to lock and unlock the cam **820**.

FIG. **33** is a cross-sectional view of the mounting system **750** taken along a line **33-33** of FIG. **30**. FIG. **34** is a detailed side view of the tilt adjustment mechanism **770** at the minimum top tilt setting. Referring to FIGS. **33** and **34**, the cam **820** can include alignment features **872**, an arcuate cam slot **880**, and a main body **882**. The alignment features **872** can be recesses, notches, indicia (e.g., printed marks), or other features alignable with an alignment feature **889** of the link **769***b*. The main body **882** can have an opening **892** through which the pin **860** extends to define the axis of rotation **894** (see FIG. **30**).

As shown in FIG. **34**, the main body **882** can include a contact surface **900**. As the television moves upwardly, the contact surface **900** can be brought into contact with a surface **902** of the plate **822** to push a lower end **930** of the link **769***b* away from the surface **902**. The pivot **803** can slide along a curved or V-shaped slot **922** of the bracket **830** to change the orientation (e.g., tilt) of the link **769***b*. FIG. **34** shows the bolt **862** at an end **930** of the cam slot **880** while the pivot **803** is at an end **932** of the slot **922**. The cam **820** can be rotated (indicated by arrow **934**) about the pin **860** to allow the pivot **803** to translate (indicated by arrow **935**) along the slot **922** and thereby reduce a distance D**1** between the pivot **803** and the surface **902**.

FIG. **35** is a cross-sectional view of the mounting system **750** taken along a line **35-35** of FIG. **30** after the cam **820** has been moved to a maximum top tilt setting by rotating the cam **820** until the bolt **862** (FIG. **36**) is located at an end **940** of the cam slot **880**. FIG. **36** is a detailed side view of the tilt adjustment mechanism **770** in the maximum top tilt setting. Referring to FIG. **36**, the pivot **803** can be positioned at a lower angled section **950** of the slot **922**. The distance D**2** can be significantly less than the distance D**1** of FIG. **34**. For example, distance D**2** of FIG. **36** can be equal to or less than 60%, 70%, 80%, 90%, or 95% of the distance D**1** of FIG. **34**.

FIG. **37** is a side elevational view of the mounting system **750** after it has been lowered (e.g., about seven inches) from its fully raised position. The cam **820** is configured and dimensioned to allow the mounting system **750** to be lowered while the surface **900** of the cam **820** is spaced apart from or engages (e.g., rolls, slides, etc.) along the back plate surface **902**.

Referring again to FIGS. **31** and **32**, the bottom tilt adjustment mechanism **772** is movable between tilt bottom settings. The tilt adjustment mechanism **772** in the maximum tilt bottom setting can cause the lowered display bracket **760** to be at maximum tilt bottom orientation, and the bottom tilt adjustment mechanism **772** in the minimum tilt bottom setting can cause the lowered display bracket **760** to be at a minimum tilt bottom orientation.

FIGS. **39** and **40** show an embodiment of the counterbalance mechanism **780** that can include a counterbalance biasing mechanism **970** and a force adjustment mechanism **972**. The counterbalance biasing mechanism **970** can be configured to counterbalance the weight of the television and, in some embodiments, can include a pair of gas springs. Other counterbalance biasing mechanisms can also be used.

The force adjustment mechanism **972** is operable to increase and decrease resistance provided by the counterbalance mechanism **780** and, in some embodiments, also allows movement of the television before extending/contracting the counterbalance mechanism **780**. The force adjustment mechanism **972** can include a bolt assembly **980**, a carriage or slider element **982** ("carriage **982**") coupled to the bolt assembly **980**, and springs **810**, **812**. The bolt assembly **980** can include an externally threaded bolt **998** (external threads are not illustrated) that can be rotated to move the carriage **982** upwardly or downwardly. When the carriage **982** is at a lowered position (e.g., adjacent to or against a lower stop **1000**), the counterbalance mechanism **780** can provide a maximum counterbalance force. When the carriage **982** is at a raised position (e.g., adjacent to or against an upper stop **1002**), the counterbalance mechanism **780** can provide a minimum counterbalance force. The carriage **982** can be moved to different positions between the stops **1000**, **1002** to orient the counterbalance biasing mechanism **780**.

The bolt assembly **980** can be moved vertically relative to the lower and upper stops **1000**, **1002** to alternatingly compress the springs **810**, **812**. When the bolt assembly **980** moves downwardly, the upper spring **810** can be compressed between a bolt head **1010** and the upper stop **1002**. FIG. **39** shows the spring **810** compressed and the spring **812** uncompressed. When the bolt assembly **980** moves upwardly, the spring **812** can be compressed between a bolt head **1012** and the lower stop **1000**. FIG. **40** shows the spring **812** compressed and the spring **810** uncompressed.

Referring to FIG. **39**, the upper spring **810** can be in a compressed state and the lower spring **812** can be in an uncompressed state when the linkage assembly **764** extends upwardly. The spring **810** can be further compressed when the mounting system **750** initially moves downward. During this initial movement, the biasing mechanism **970** can remain fixed (i.e., it does not extend/contract a significant amount). As such, the television can be moved due to compression of the spring **810**. After fully compressing the spring **810**, the biasing mechanism **970** can extend/contract to provide a counterbalance force for most of the travel of the television.

As shown in FIG. **40**, when the linkage assembly **764** extends downwardly, the upper spring **810** can be uncompressed and the lower spring **812** is compressed. The carriage **982** can move upwardly to further compress the lower spring **812**. The spring **812** can be further compressed when the mounting system **750** initially moves upward. The television can be initially moved due to compression of the spring **812**. After fully compressing the spring **812**, the biasing mechanism **970** can extend/contract to provide a counterbalance force for most of the travel of the television.

The counterbalance mechanism and any of its components of FIGS. **39** and **40** can be incorporated into any of the mount systems disclosed herein. Aspects of the embodi-

ments can be modified, if necessary to employ concepts of the various patents, applications and publications to provide yet further embodiments. For example, U.S. Provisional Patent Application No. 61/913,195 filed Dec. 6, 2014, U.S. Provisional Patent Application No. 61/396,850 filed Jun. 4, 2010, U.S. patent application Ser. No. 13/118,297 filed May 27, 2011, U.S. patent application Ser. No. 14/562,842, U.S. patent application Ser. No. 14/229,780, and U.S. patent application Ser. No. 13/118,297 are all incorporated herein by reference in their entireties and can be combined with embodiments disclosed herein. Additionally, the description of the mounting systems **100**, **400**, **700**, **750** applies equally to the mounting systems discussed in connection with FIGS. **41-71** unless indicated otherwise. Aspects of the mounting systems **1100** and **2000** can be modified to include components or employ concepts of the mounting systems **100**, **400**, **700**, or **750**. Additionally, aspects of the mounting systems **100**, **400**, **700**, or **750** can be modified to include components or employ concepts of the mounting systems **1100** and **2000**. Accordingly, various features of the mounting systems can be mixed and matched to achieve as desired.

FIGS. **41** and **42** show a mounting system in the form of a wall mount **1100** ("wall mount **1100**") that includes a linkage assembly **1130**, a support bracket **1140**, and a display bracket **1142** with electronic display holders or brackets **1145**, **1147** (shown removed in FIG. **42**). The linkage assembly **1130** is rotatably coupled to the support and display brackets **1140**, **1142** and can swing upwardly (indicated by arrow **1150** of FIG. **41**) or downwardly (indicated by arrow **1152** of FIG. **41**). The support bracket **1140** is mounted on a support structure **1120**, which can be a vertical wall. The wall mount **1100** can include an actuator assembly **1200** operable to drive the display bracket **1142** to different positions. The display bracket **1142** can be tilted at certain points along its path of travel after it has been moved away from the support structure or wall. This allows the electronic display to be maintained at a suitable orientation with respect to a viewer's line of sight. As the electronic display is lowered, it can gradually tilt to remain at a suitable viewing orientation.

The linkage assembly **1130** can include a main member or upper link **1176** ("upper link **1176**") and a lower link **1412**. The upper link **1176** is rotatable about an upper axis of rotation **1180** defined by support pivots **1190**. The lower link **1412** is rotatable about a lower axis of rotation **1182** defined by support pivot **1292** (FIG. **42**). The axes of rotation **1180**, **1182** can lie in an imaginary plane which is substantially parallel to the wall **1120**. The display bracket **1142** can be rotatably coupled to the upper link **1176** by pivot **1177** (FIG. **41**). The linkage assembly **1130** can have other configurations, number of linkages, and other suitable components (e.g., biasing mechanisms, counterbalances, etc.) that provide desired functionality.

Referring now to FIG. **42**, an actuator assembly **1200** can include a linear actuator **1218**, motor **1244** (FIG. **41**), controller, processing units, combinations thereof, or the like. The linear actuator **128** can be rotatably coupled to the support bracket **1140** and the display bracket **1142**. The motor **1244** (FIG. **41**) can include one or more drive motors, stepper motors, or the like that are mounted on the linear actuator **1218**, the mounting bracket **1142**, or another suitable component. In some embodiments, a controller comprising one or more processing units is carried by the motor **1244**. The configuration of components of the actuator assembly **1200** can be selected based on the desired functionality and modes of operation.

With continued reference to FIG. **42**, the wall mount **1100** can also include an actuator positioner **1220** and a bottom tilt mechanism **1290**. The actuator positioner **1220** can be used to move an end **1260** of the linear actuator **1218** relative to the linkage assembly **1130** to function as a force adjusting mechanism for increasing or decreasing the amount of force needed to, for example, raise and/or lower the display bracket **1142**. This allows different electronic displays to be mounted on the display bracket **1042**. The user can select the appropriate position of the actuator assembly **1200** based on the desired amount of flexing of components, weight of the display, or the like.

FIGS. **43-48** show the wall mount **1100** at different positions. When the wall mount **1100** is at or near the stowed position of FIG. **43**, the display bracket **1142** can be moved away from the support bracket **1140**. FIGS. **43** and **44** show the linkage assembly **1130** and display bracket **1142** initially moving together with substantially no relative movement therebetween. As shown in FIGS. **44-48**, when the wall mount **1100** continues to move downward, the cam mechanism **1300** (labelled in FIGS. **44** and **45**) causes rotation of the display bracket **1142** relative to linkage assembly **1130**. Once the display bracket **1142** is at the desired orientation, the cam mechanism **1300** allows further deployment of the wall mount **1100** without further relative rotation of the display bracket **1142**.

Referring again to FIG. **43**, the raised wall mount **1100** can include a stowed tilt mechanism **1270** operable to move the display bracket **1142**, as indicated by arrow **1272**, when the wall mount **1100** is at or near the stowed position. In some embodiments, the wall mount **1100** can remain at an over-center position while the stowed tilt mechanism **1270** adjusts the position of the display bracket **1142**. The bottom tilt mechanism **1290** can be used to adjust the position of the lower pivot **1292**. For example, a user can manually operate the bottom tilt mechanism **1290** to set the position of the lower pivot **1292**, so as to control or limit the amount of travel of the pivot **1292** along a slot **1410**, as discussed in connection with FIGS. **55-62**A.

FIG. **44** shows the wall mount **1100** after it has been moved away from an over-center position. The lower pivot **1292** can move rearwardly (indicated by arrow **1293**) to maintain an appropriate distance between pivot points. FIG. **45** shows the pivot **1292** after it has been moved rearwardly along the slot **1410**.

With reference to FIGS. **44** and **45**, in some embodiments, the display bracket **1142** can angle downwardly as the wall mount **1100** is initially moved away from a wall. FIGS. **44** and **45** show the cam mechanism **1300** causing the bottom of the display bracket **1142** to rotate away from the lower linkage **1412**, as indicated by arrow **1302**. FIG. **46** shows display bracket **1142** after it has been tilted to a generally vertical orientation. FIGS. **46** to **48** show the display bracket **1142** at a generally vertical orientation to hold the display or television **1320** (illustrated in phantom line in FIG. **46**) generally parallel to the support surface **1120** (FIG. **46**).

Referring now to FIG. **45**, the passive cam mechanism **1300** can include a passive tilt cam **1500** and a follower **1540** and has different states of operation, including a camming state (FIGS. **43** and **44**), a non-camming or neutral camming state (FIG. **45**), or other desired states. FIG. **46** shows the passive camming mechanism **1300** operating to keep the display bracket **1142** at a viewing orientation. The display bracket **1142** can be lowered while maintaining its orientation. The configuration of the cam mechanism **1300** can be selected to provide the desired amount of rotation/translation of the display bracket. Details of the components and

operation of the passive cam mechanism **1300** are discussed in connection with FIGS. **63-67**A.

FIG. **49** is a front view of the wall mount **1100** in a raised configuration, FIG. **50** is an isometric view of the wall mount **1100**, and FIG. **51** is a detailed view of the actuator positioner **1220**. The actuator positioner **1220** has a locked configuration for holding at least a portion of the end **1260** of the linear actuator **1218** stationary and an unlocked configuration for driving the end **1260** to another position. The actuator positioner **1220** can be used to set the position of the linear actuator **1218** to accommodate televisions of different weights, adjust flexing of components of the wall mount **1100**, or the like.

Referring now to FIG. **51**, the actuator positioner **1220** can include a carriage **1330** movable along a predetermined path, carriage positioners **1370**, **1372** configured to move the carriage **1330**, and carriage locking features **1340***a*, **1340***b*, **1340***c* (collectively "fasteners **1340**") configured to lock the carriage **1330**. The carriage locking features **1340** can include bolts, nut and bolt assemblies, pins, or combinations thereof and can extend through respective openings in fixed bracket members **1350** of the support bracket **1140**.

FIG. **52** is an isometric view of the actuator positioner **1220** in accordance with one embodiment. The carriage **1330** can include spaced apart plates **1351**, **1352** and a pin **1360** extending between the plates **1350**, **1352**. The pin **1360** can be rotatably coupled to the linear actuator end **1260** to allow the linear actuator **1218** to rotate freely and can include, without limitation, a pivot, bearings, threaded ends, pins, or other features for connecting components.

FIGS. **53** and **54** show carriage positioners **1370**, **1372** that threadably engage internally threaded holes in a support member **1396**. The carriage positioners **1370**, **1372** can be bolts, screws, threaded members, plungers, or combinations thereof. The number, position, or configuration of the carriage positioners can be selected based on the selected number of contact points along the carriage.

Referring now to FIG. **53**, the carriage positioners **1370**, **1372** can be rotated clockwise (indicated by arrows **1380**, **1382**) to push the carriage **1330** upwardly. As the carriage positioners **1370**, **1372** rotate, the fastener **1340***b* moves upwardly along slot **1390** and the fastener **1340***c* moves upwardly along a slot **1392**. FIG. **54** shows the carriage **1330** after the carriage **1330** has been moved upwardly and the fasteners **1340***b*, **1340***c* are at the upper ends of the slots **1390**, **1392**, respectively.

FIG. **55** is a side view of the wall mount **1100** at a generally horizontal position. FIGS. **56** and **57** are detailed views of the bottom tilt mechanism **1290** in different configurations. Referring now to FIG. **56**, the bottom tilt mechanism **1290** can include an adjustment element **1400** and an adjustment element positioner **1402**. The adjustment element **1400** can contact and push the pivot **1292** along the slot **1410** in the linkage **1412**. In some embodiments, the adjustment element **1400** has an angled contact or bearing edge **1420**. When the adjustment element **1400** is moved from the raised position (illustrated in FIG. **56**) to the lowered position (illustrated in FIG. **57**), the bearing edge **1420** drives the pivot **1292** along the slot **1410**. The pivot **1292** can be moved from a rearward position shown in FIG. **56** to a forward position shown in FIG. **57**. The lowered adjustment element **1400** of FIG. **57** can limit or substantially prevent translation of the pivot **1292** along the slot **1410**.

FIGS. **58** and **59** are isometric and front views, respectively, of the bottom tilt mechanism **1290**. Referring now to FIG. **59**, the adjustment element **1400** can include plates **1430**, **1432** with edges **1420**. The positioner **1402** can include an engagement element in the form of a disc or plate **1460** that extends through slots in the plates **1430**, **1432**. A threaded body **1458** of the adjustment element positioner **1402** can be rotated to translate the plate **1460**. As the disc **1460** translates, it moves the plates **1430**, **1432** upwardly or downwardly. The number, configuration, and position of the plates can be selected based on desired actuation capability.

FIGS. **60** to **62**A illustrate the wall mount **1100** in accordance with one embodiment. FIGS. **60** and **60**A show the pivot **1292** positioned generally midway between ends **1461**, **1462** of the slot **1410**. As the wall mount **1100** is lowered, the pivot **1292** moves along the slot **1410**, as indicated by arrow **1480**.

FIGS. **61** and **61**A show the pivot **1292** located at the end **1461** (visible in FIG. **60**A) of the slot **1410**. As the wall mount **1100** continues to be lowered, the pivot **1292** can be translationally fixed. When the wall mount **1100** is at the fully lowered position, the pivot **1292** can remain translation fixed at the end **1461** (visible in FIG. **60**A) of the slot **1410**.

FIG. **63** is an isometric view of the display bracket **1142** in accordance with one embodiment. The passive tilt cam **1500** ("cam **1500**") is secured to a main body **1510** and can include plates **1530**, **1532** that are substantially geometrically congruent to one another.

FIGS. **64** to **67**A illustrate the wall mount **1100** in accordance with one embodiment. When the wall mount **1100** is at the fully raised position, the cam follower **1540** can be positioned generally along a first recessed section or region **1544** (FIG. **64**A) of the cam follower **1540**, which can be fixedly coupled to the link **1142**. As the lower link **1412** rotates, the follower **1540** and the pivot **1592** can be pushed apart from one another and the pivot **1592** moves along a slot **1590** in the lower link **1412**. FIG. **64**A shows the pivot **1592** at an end **1591** of the slot **1590**.

As the wall mount **1100** moves downwardly, the cam follower **1540** can move along the edge **1572** of the tilt cam **1500**, as indicated by arrow **1560**. As the display bracket **1142** rotates in the counterclockwise direction, the pivot **1592** is pushed away from the follower **1540** by the cam **1500**. This is because the distance between the pivot **1592** to the edge **1569** gradually increases from a second section or region **1554** to a third section or region **1572**. As the follower **1540** and link **1412** are pushed away from the pivot **1592**, the pivot **1592** moves along a slot **1594**.

With reference to FIG. **65**A, the distance D**2** is greater than D**1**. The difference between D**2** and D**1** corresponds to the amount of translation of the pivot **1570**. Once the follower **1540** moves along the fourth section or region **1576**, the distance D**2** remains generally constant to distance D**3**. Accordingly, the distance between the follower **1540** and the pivot **1592** remains generally constant as the follower **1540** moves along the fourth region **1576**, as shown in FIGS. **67** and **67**A.

FIG. **68** is a side view of the wall mount **1100** in the raised position in an accordance with one embodiment. FIGS. **68**A and **68**B are detailed views of the top tilt mechanism **1270** including a base **1600** and extendable member **1610**. FIG. **68**A shows the member **1610** within the base **1600** such that the display bracket **1412** is at a generally vertical orientation. FIG. **68**B shows the display bracket **1412** after it has been tilted by the member **1610** moving out of the base **1600**. The member **1610** can have an externally threaded body **1640** that threadably engages a threaded base in the base **1600**. The member **1610** can be extended to tilt the bracket **1142**. In some embodiments, the member **1610** is a threaded bolt with a head **1630** that bears against at least a portion of the linkage assembly **1130**. The bolt **1610** can be rotated in one

direction (e.g., clockwise) to move the member **1610** into the base **1600** and rotated the other direction (e.g., counterclockwise) to move it out of the base **1600**. The distance the member **1610** extends out of the base **1600** can be increased or decreased to increase or decrease tilt of the display bracket **1412**. In other embodiments, the base **1600** can be attached to the linkage assembly **1310**, and the member **1610** can bear against the display bracket **1142**. Other tilt mechanisms can be used to adjust the position of the display bracket **1142** at the raised or stowed position.

FIG. **69** is a top view of a mounting system **2100** with a swivel mechanism **2102**. The mounting system **2100** can include a pivot **2104** about which a display bracket **2110** rotates relative to a linkage assembly **2112**. A user can manually rotate the bracket **2110** an angle X to position a display **2114** (shown in phantom line). The angle X can be in the range of about 5 degrees to 45 degrees, 10 degrees to 30 degrees, or other suitable ranges. In other installations, the pivot **2104** can be positioned within an opening **2018** of a swivel bracket **2109**. This allows the display bracket **2110** to rotate in the opposite direction.

FIG. **70** is a top view of a mounting system **2200** with a motorized swivel mechanism **2202**. The motorized swivel mechanism **2202** can include a swivel actuator **2203** configured to drive a display bracket **2210** about an axis of rotation defined by the pivot **2204**. The swivel actuator **2203** can include, without limitation, one or more motors, solenoids, or combinations thereof and can be connected to a linkage assembly **2221** via one or more connectors, such as rods, chains, and/or belts. In other embodiments, the swivel actuator **2203** can be mounted on the linkage assembly **2221** and connected to the display bracket **2210** via one or more connectors.

FIG. **71** is a side view of a mounting system in accordance with one embodiment. The mounting system is in form of wall mount **2300**, that can include a wall support **2302**, a linkage assembly **2304**, and display bracket **2306**. The linkage assembly **2304** can include a plurality of actuators **2310**, **2312** that cooperate to provide relative motion between the brackets **2302**, **2306**. The actuator **2310** extends from and is pivotally coupled to a carriage assembly **2320** and an upper pivot **2030**. The lower actuator **2312** extends between a lower pivot **2340** held by the support bracket **2302** and a pivot **2342**, which is coupled to a member **2350** of the display bracket **2306**. The actuators **2310**, **2312** can extend or contract to raise, lower, tilt, or otherwise move the display bracket **2306**. For example, the actuator **2312** can adjust its length to tilt the display bracket **2306** without raising/lowering the display bracket **2306**. Other mounting systems disclosed herein can include multiple actuators to provide desired functionality.

FIG. **72** is a side view of a mounting system **3000** in accordance with another embodiment. FIG. **72**A is a detailed view of a portion of the mounting system of FIG. **72**. The relevant description of the mounting system **1100** discussed in connection with FIGS. **41**-**68**B applies to the mounting system **3000**, except as indicated otherwise. The mounting system **3000** includes a switch assembly **3010** (FIG. **72**A) configured to control operation of the mounting system. The switch assembly **3010** can be mounted on a display bracket or other suitable component and can control driving provided by the motorized actuator when the mounting system **3000** near to or at the top position. This provides repeatable operation independent of the weight of the display being carried.

Referring to FIG. **72**A, the switch assembly **3010** can include an actuatable plunger **3020** and a main body or switch **3030**. An adjustable switch point **3040** movable away from or toward the plunger **3020**. A switch point element **3060** can be a locknut or another suitable element rotatably to move a bolt **3070**, as indicated by arrows **3072**, **3074**. The switch point element **3060** is carried by the linkage assembly or another component. The bolt **3070** can be extended or retracted to adjust the location of the fully raised position.

FIG. **73** is a side view of the mounting system **3000** in a fully raised configuration. FIG. **73**A is a detailed view of the mounting system **300** with the plunger **3020** in a depressed position. A motorized actuator can raise the linkage assembly until the plunger **3020** is depressed a desired amount. The number, configuration, and functionality of the switches can be selected based on the desired operation of the mounting system **3000**. For example, the switches can be contact switches, proximity switches, or the like.

Various methods and techniques described above provide a number of ways to carry out the invention. Of course, it is to be understood that not necessarily all objectives or advantages described may be achieved in accordance with any particular embodiment described herein and may depend on the use of the mounting systems. Thus, for example, those skilled in the art will recognize that the methods may be performed in a manner that achieves or optimizes one advantage or group of advantages as taught herein without necessarily achieving other objectives or advantages as may be taught or suggested herein. Furthermore, the skilled artisan will recognize the interchangeability of various features from different embodiments disclosed herein and disclosed in U.S. patent application Ser. No. 14/563,842; U.S. Provisional Patent Application No. 61/913,195; U.S. patent application Ser. No. 14/229,780; U.S. patent application Ser. No. 13/118,297; and U.S. Provisional Patent Application No. 61/396,850. For example, cam mechanisms, tilting features, panning features, counterbalancing features, controllers, motors, etc. can be incorporated into linkage assemblies, support brackets, display brackets, or the like. All of these applications are incorporated herein by reference in their entireties. Similarly, the various features and acts discussed above, as well as other known equivalents for each such feature or act, can be mixed and matched by one of ordinary skill in this art to perform methods in accordance with principles described herein.

Although the invention has been disclosed in the context of certain embodiments and examples, it will be understood by those skilled in the art that the invention extends beyond the specifically disclosed embodiments to other alternative embodiments and/or uses and obvious modifications and equivalents thereof. Accordingly, it is not intended that the invention be limited, except as by the appended claims.

What is claimed is:

1. A television mounting system comprising:

a support bracket configured to couple to a wall;

a display bracket configured to hold a television;

an arm assembly pivotally coupled to the support bracket and movable between a raised configuration to position the display bracket at a raised position and a lowered configuration to position the display bracket at a lowered position, wherein the arm assembly includes an upper arm and a lower arm; and

a motorized actuator assembly having a support bracket end rotatably coupled to the support bracket and a display bracket end rotatably coupled to the arm assembly, wherein at least a portion of the motorized actuator assembly moves through an opening in the arm assembly and past a portion of the lower arm in a direction toward the display bracket when the arm assembly

moves toward the raised configuration, wherein the portion of the motorized actuator assembly moves away from the opening when the arm assembly moves toward the lowered configuration.

2. The television mounting system of claim **1**, wherein the lower arm is rotatable about a first axis of rotation and a second axis of rotation, wherein the portion of the motorized actuator assembly is positioned forwardly, in a direction toward the display bracket, of the first axis of rotation and the second axis of rotation when the arm assembly is in the raised configuration.

3. The television mounting system of claim **1**, wherein the portion of the motorized actuator assembly is movable forwardly past at least a portion of the lower arm laterally adjacent the motorized actuator assembly.

4. The television mounting system of claim **1**, wherein the portion of the motorized actuator assembly is spaced vertically apart from the opening when the arm assembly is in the lowered configuration.

5. The television mounting system of claim **1**, wherein the motorized actuator assembly includes a motor and an extendable member.

6. The television mounting system of claim **1**, further comprising a programmable control device configured to store user-set positions for the display bracket.

7. The television mounting system of claim **1**, further including:

a wireless controller configured to control operation of the motorized actuator assembly and to program the television mounting system with user-set position settings.

8. A television mounting system for raising and lowering a television, the television mounting system comprising:

a support bracket;

a display bracket;

a linkage assembly pivotally coupled to the support bracket and movable to raise and lower the display bracket, the linkage assembly includes an upper arm and a lower arm;

a motorized actuator assembly operable to cause movement of the display bracket, wherein at least a portion of the motorized actuator assembly moves forwardly past a portion of the lower arm in a direction toward the display bracket when the linkage assembly moves toward a raised configuration, wherein the portion of the motorized actuator assembly is positioned vertically between the upper arm and the lower arm when the linkage assembly is in a lowered configuration; and

a programmable control system configured to be in communication with the motorized actuator assembly.

9. The television mounting system of claim **8**, wherein the lower arm is rotatable about a first axis of rotation and a second axis of rotation, wherein the portion of the motorized actuator assembly is positioned forwardly, in a direction away from the support bracket, of the first axis of rotation and the second axis of rotation when the linkage assembly is in the raised configuration.

10. The television mounting system of claim **8**, wherein the lower arm is rotatable about a first axis of rotation and a second axis of rotation, wherein the portion of the motorized actuator assembly is positioned forward of an imaginary plane passing through the first axis of rotation and the second axis of rotation in a direction toward the display bracket when the linkage assembly is in the raised configuration.

11. The television mounting system of claim **8**, wherein the lower arm includes a pair of links rotatably coupled to the support bracket.

12. The television mounting system of claim **8**, wherein the portion of the motorized actuator assembly is configured to pass through an opening defined by the linkage assembly.

13. The television mounting system of claim **8**, wherein the portion of the motorized actuator assembly is closer to the display bracket than a backside of the support bracket when the linkage assembly is in the raised configuration, wherein the backside of the support bracket is configured to face a wall to which the support bracket is mounted.

14. The television mounting system of claim **8**, wherein the lower arm is rotatable about a first axis of rotation and a second axis of rotation, wherein the motorized actuator assembly is rotatable about an actuator axis of rotation relative to the support bracket, wherein the actuator axis of rotation is spaced vertically apart from the first axis of rotation.

15. The television mounting system of claim **8**, wherein the portion of the motorized actuator assembly moves past the lower arm in a direction away from the support bracket when the linkage assembly moves toward the raised configuration, and wherein the portion of the motorized actuator assembly moves away from the lower arm in a vertical direction when the linkage assembly moves toward the lowered configuration.

16. The television mounting system of claim **8**, wherein the motorized actuator assembly moves away from the lower arm when the linkage assembly moves toward the lowered configuration.

17. The television mounting system of claim **8**, wherein the control system includes

a control device connected to the motorized actuator assembly via a wired or wireless connection, and

a remote control configured to wirelessly communicate with the control device.

18. A television mounting system, comprising:

a support bracket;

a display bracket;

a linkage assembly pivotally coupled to the support bracket and movable to raise and lower the display bracket;

a motorized actuator assembly coupled to a linkage assembly, wherein at least a portion of the motorized actuator assembly moves into and past an opening defined by the linkage assembly in a direction toward the display bracket when the linkage assembly moves toward a raised configuration; and

a programmable control system in communication with the motorized actuator assembly and including one or more processors and memory, wherein the memory stores at least one position setting.

19. The television mounting system of claim **18**, wherein the linkage assembly includes a lower arm rotatably about a first axis of rotation and a second axis of rotation to move the display bracket forward away from the support bracket, wherein the portion of the motorized actuator assembly is positioned forward of the first axis of rotation and the second axis of rotation when the linkage assembly is in the raised configuration.

20. The television mounting system of claim **18**, wherein the linkage assembly includes a lower arm is rotatably about a first axis of rotation and a second axis of rotation, wherein the portion of the motorized actuator assembly is positioned forward of the first axis of rotation and the second axis of rotation in a direction toward the display bracket when the linkage assembly is in the raised configuration.

21. The television mounting system of claim **18**, wherein the portion of the motorized actuator assembly protrudes through an opening defined by the linkage assembly.

22. The television mounting system of claim **18**, wherein the portion of the motorized actuator assembly is closer to the display bracket than a backside of the support bracket when the linkage assembly is in the raised configuration, wherein the backside of the support bracket is configured to face a wall to which the television mounting system is mounted.

23. The television mounting system of claim **18**, wherein the programmable control system is configured to automatically move the display bracket to the at least one position setting based on received user input.

24. The television mounting system of claim **18**, wherein the programmable control system includes a wireless receiver in communication with the memory and the one or more processors.

25. The television mounting system of claim **18**, further comprising a pivot rotatably coupling an end of the motorized actuator assembly to the support bracket, wherein the pivot is positioned vertically between upper and lower support bracket pivots about which components of the linkage assembly rotate relative to the support bracket when the support bracket is coupled to a vertical wall.

26. A television mounting system comprising:

a support bracket;

a display bracket configured to carry a television;

an arm assembly pivotally coupled to the support bracket and movable between a first configuration for holding the display bracket at a first position and a second configuration for holding the display bracket at a second position different from the first position;

a motorized actuator assembly having a portion that moves outwardly past a side of a lower arm of the arm assembly in a direction away from the support bracket while the display bracket moves to a raised position; and

a control system configured be programmed by a user to control operation of the motorized actuator assembly.

27. The television mounting system of claim **26**, wherein the arm assembly includes a lower arm extending between a first axis of rotation and a second axis of rotation, wherein the portion of the motorized actuator assembly is positioned forward of the first axis of rotation and the second axis of rotation when the arm assembly is in a raised configuration.

28. The television mounting system of claim **27**, wherein the first axis of rotation and the second axis of rotation are spaced apart below an extendable actuator of the motorized actuator assembly when the arm assembly is in a lowered configuration.

29. The television mounting system of claim **26**, wherein the arm assembly includes a lower arm is rotatable about to a first axis of rotation and a second axis of rotation, wherein the portion of the motorized actuator assembly is positioned forward, toward the display bracket, of an imaginary plane extending between the first axis of rotation and the second axis of rotation when the arm assembly is in the raised configuration.

30. The television mounting system of claim **29**, wherein the imaginary plane moves away from and is spaced apart from the portion of the motorized actuator assembly when the arm assembly is in a lowered forward configuration.

31. The television mounting system of claim **26**, wherein the portion of the motorized actuator assembly protrudes through an opening defined by the lower arm.

32. The television mounting system of claim **26**, wherein the portion of the motorized actuator assembly is closer to the display bracket than a backside of the support bracket when the arm assembly is in the first configuration, and wherein the backside of the support bracket is configured to face a wall to which the television mounting system is mounted.

33. A television mounting system comprising:

a support bracket configured to couple to a wall;

a display bracket configured to hold a television;

an arm assembly pivotally coupled to the support bracket and movable between a raised configuration to position the display bracket at a raised position and a lowered configuration to position the display bracket at a lowered position, wherein the arm assembly includes an upper arm and a lower arm; and

a motorized actuator assembly having a support bracket end rotatably coupled to the support bracket and a display bracket end rotatably coupled to the arm assembly, wherein at least a portion of the motorized actuator assembly moves toward and past a portion of the lower arm when the arm assembly moves toward the raised configuration.

34. The television mounting system of claim **33**, wherein the portion of the motorized actuator assembly moves away from and is vertically spaced apart from the lower arm when the arm assembly is in the lowered configuration.

35. The television mounting system of claim **33**, wherein the lower arm extends between a first axis of rotation and a second axis of rotation, wherein the portion of the motorized actuator assembly is positioned forward of the first axis of rotation and the second axis of rotation when the arm assembly is at the raised configuration.

36. The television mounting system of claim **35**, wherein the first axis of rotation and the second axis of rotation are spaced apart from and located below an extendable actuator of the motorized actuator assembly when the arm assembly is in the lowered configuration.

* * * * *