UNITED STATES PATENT AND TRADEMARK OFFICE

UNITED STATES DEPARTMENT OF COMMERCE
United States Patent and Trademark Office
Address: COMMISSIONER FOR PATENTS
P.O. Box 1450
Alexandria, Virginia 22313-1450
www.uspto.gov

APPLICATION NUMBER	FILING OR 371(C) DATE	FIRST NAMED APPLICANT	ATTY. DOCKET NO./TITLE
14/849,458	09/09/2015	Dean Solon	S4079.10001US02

CONFIRMATION NO. 5067

97149
Maschoff Brennan
1389 Center Drive, Suite 300
Park City, UT 84098

POA ACCEPTANCE LETTER

OC000000129716332

Date Mailed: 11/12/2021

NOTICE OF ACCEPTANCE OF POWER OF ATTORNEY

This is in response to the Power of Attorney filed 11/04/2021.

The Power of Attorney in this application is accepted. Correspondence in this application will be mailed to the above address as provided by 37 CFR 1.33.

Questions about the contents of this notice and the requirements it sets forth should be directed to the Office of Data Management, Application Assistance Unit, at **(571) 272-4000** or **(571) 272-4200** or **1-888-786-0101**.

/atesfai/

UNITED STATES PATENT AND TRADEMARK OFFICE

UNITED STATES DEPARTMENT OF COMMERCE
United States Patent and Trademark Office
Address: COMMISSIONER FOR PATENTS
P.O. Box 1450
Alexandria, Virginia 22313-1450
www.uspto.gov

APPLICATION NUMBER	FILING OR 371(C) DATE	FIRST NAMED APPLICANT	ATTY. DOCKET NO./TITLE
14/849,458	09/09/2015	Dean Solon	SHOALS-59

CONFIRMATION NO. 5067

POWER OF ATTORNEY NOTICE

Carla Gannon Law
4891 Long Beach Rd. SE
Suite 3-137
Southport, NC 28461

OC000000129716284

Date Mailed: 11/12/2021

NOTICE REGARDING CHANGE OF POWER OF ATTORNEY

This is in response to the Power of Attorney filed 11/04/2021.

- The Power of Attorney to you in this application has been revoked by the assignee who has intervened as provided by 37 CFR 3.71. Future correspondence will be mailed to the new address of record(37 CFR 1.33).

Questions about the contents of this notice and the requirements it sets forth should be directed to the Office of Data Management, Application Assistance Unit, at **(571) 272-4000** or **(571) 272-4200** or **1-888-786-0101**.

/atesfai/

Voltage, LLC
EX1021-2

TRANSMITTAL FOR POWER OF ATTORNEY TO ONE OR MORE REGISTERED PRACTITIONERS

NOTE: This form is to be submitted with the Power of Attorney by Applicant form (PTO/AIA/82B or equivalent) to identify the application to which the Power of Attorney directed, in accordance with 37 CFR 1.5. If the Power of Attorney by Applicant form is not accompanied by this transmittal form or an equivalent, the Power of Attorney will not be recognized in the application.

Application Number	14/849,458
Filing Date	September 9, 2015
First Named Inventor	Dean Solon
Title	LEAD ASSEMBLY FOR CONNECTING SOLAR PANEL ARRAYS TO INVERTER
Art Unit	1726
Examiner Name	Eric R. Smith
Attorney Docket Number	S4079.10001US02

SIGNATURE of Applicant or Patent Practitioner			
Signature	/Eric L. Maschoff/	**Date**	November 4, 2021
Name	Eric L. Maschoff	**Telephone**	(435) 252-1360
Registration Number	36,596		

MASCHOFF BRENNAN, PLLC
1389 Center Drive, SUITE 300
PARK CITY, UTAH 84098, USA

POWER OF ATTORNEY BY APPLICANT

[Assignee, Legal Representative or Person with Proprietary Interest]

I hereby revoke all previous powers of attorney given in the application identified in the attached Transmittal for Power of Attorney form.

■ I hereby appoint Practitioner(s) associated with the following Customer Number as my/our attorney(s) or agent(s), and to transact all business in the United States Patent and Trademark Office connected therewith for the application referenced in the attached transmittal letter:

97149

Please recognize or change the correspondence address for the above-identified patent to:

■ The address associated with the above-mentioned Customer Number.

I am the Applicant:

- ☑ Assignee or Person to Whom the Inventor is Under an Obligation to Assign
- ☐ Legal Representative of a Deceased or Legally Incapacitated Inventor
- ☐ Person Who Otherwise Shows Sufficient *Proprietary* Interest (*e.g.*, a petition under 37 CFR 1.46 (b)(2) was granted in the application or is concurrently being filed with this document)

SIGNATURE of Applicant for Patent

The individual whose signature and title is supplied below is authorized to act on behalf of the Applicant

Signature	Mehgan Peetz	Date	August 25, 2021
Name	Mehgan Peetz	Telephone	6153887696
Company	SHOALS TECHNOLOGIES GROUP, LLC	Title	CLO

NOTE: Signature - This form must be signed by the applicant or applicant's representative in accordance with 37 CFR 1.33. See 37 CFR 1.4 for signature requirements and certifications. Submit multiple forms for more than one signature, see below*.

*Total of 1 forms are submitted.

MASCHOFF BRENNAN, PLLC
1389 Center Drive, SUITE 300
PARK CITY, UTAH 84098, USA

PTO/AIA/96 (08-12)
Approved for use through 01/31/2013. OMB 0651-0031
U.S. Patent and Trademark Office; U.S. DEPARTMENT OF COMMERCE
Under the Paperwork Reduction Act of 1995, no persons are required to respond to a collection of information unless it displays a valid OMB control number.

STATEMENT UNDER 37 CFR 3.73(c)

Applicant/Patent Owner: SHOALS TECHNOLOGIES GROUP, LLC

Application No./Patent No.: 14/849,458 Filed/Issue Date: September 9, 2015

Titled: LEAD ASSEMBLY FOR CONNECTING SOLAR PANEL ARRAYS TO INVERTER

SHOALS TECHNOLOGIES GROUP, LLC, a Corporation

(Name of Assignee) (Type of Assignee, e.g., corporation, partnership, university, government agency, etc.)

states that, for the patent application/patent identified above, it is (choose **one** of options 1, 2, 3 or 4 below):

1. ☑ The assignee of the entire right, title, and interest.

2. ☐ An assignee of less than the entire right, title, and interest (check applicable box):

☐ The extent (by percentage) of its ownership interest is _____%. Additional Statement(s) by the owners holding the balance of the interest must be submitted to account for 100% of the ownership interest.

☐ There are unspecified percentages of ownership. The other parties, including inventors, who together own the entire right, title and interest are:

Additional Statement(s) by the owner(s) holding the balance of the interest must be submitted to account for the entire right, title, and interest.

3. ☐ The assignee of an undivided interest in the entirety (a complete assignment from one of the joint inventors was made). The other parties, including inventors, who together own the entire right, title, and interest are:

Additional Statement(s) by the owner(s) holding the balance of the interest must be submitted to account for the entire right, title, and interest.

4. ☐ The recipient, via a court proceeding or the like (*e.g.*, bankruptcy, probate), of an undivided interest in the entirety (a complete transfer of ownership interest was made). The certified document(s) showing the transfer is attached.

The interest identified in option 1, 2 or 3 above (not option 4) is evidenced by either (choose **one** of options A or B below):

A. ☐ An assignment from the inventor(s) of the patent application/patent identified above. The assignment was recorded in the United States Patent and Trademark Office at Reel _____, Frame _____, or for which a copy thereof is attached.

B. ☑ A chain of title from the inventor(s), of the patent application/patent identified above, to the current assignee as follows:

1. From: Inventor To: SHOALS TECHNOLOGIES GROUP, LLC

The document was recorded in the United States Patent and Trademark Office at

Reel 036910, Frame 0773, or for which a copy thereof is attached.

2. From: _____ To: _____

The document was recorded in the United States Patent and Trademark Office at

Reel _____, Frame _____, or for which a copy thereof is attached.

This collection of information is required by 37 CFR 3.73(b). The information is required to obtain or retain a benefit by the public which is to file (and by the USPTO to process) an application. Confidentiality is governed by 35 U.S.C. 122 and 37 CFR 1.11 and 1.14. This collection is estimated to take 12 minutes to complete, including gathering, preparing, and submitting the completed application form to the USPTO. Time will vary depending upon the individual case. Any comments on the amount of time you require to complete this form and/or suggestions for reducing this burden, should be sent to the Chief Information Officer, U.S. Patent and Trademark Office, U.S. Department of Commerce, P.O. Box 1450, Alexandria, VA 22313-1450. DO NOT SEND FEES OR COMPLETED FORMS TO THIS ADDRESS. **SEND TO: Commissioner for Patents, P.O. Box 1450, Alexandria, VA 22313-1450.**

If you need assistance in completing the form, call 1-800-PTO-9199 and select option 2.

Under the Paperwork Reduction Act of 1995, no persons are required to respond to a collection of information unless it displays a valid OMB control number.

STATEMENT UNDER 37 CFR 3.73(c)

3. From: _____ To: _____

The document was recorded in the United States Patent and Trademark Office at

Reel _____, Frame _____, or for which a copy thereof is attached.

4. From: _____ To: _____

The document was recorded in the United States Patent and Trademark Office at

Reel _____, Frame _____, or for which a copy thereof is attached.

5. From: _____ To: _____

The document was recorded in the United States Patent and Trademark Office at

Reel _____, Frame _____, or for which a copy thereof is attached.

6. From: _____ To: _____

The document was recorded in the United States Patent and Trademark Office at

Reel _____, Frame _____, or for which a copy thereof is attached.

☐ Additional documents in the chain of title are listed on a supplemental sheet(s).

☐ As required by 37 CFR 3.73(c)(1)(i), the documentary evidence of the chain of title from the original owner to the assignee was, or concurrently is being, submitted for recordation pursuant to 37 CFR 3.11.

[NOTE: A separate copy (i.e., a true copy of the original assignment document(s)) must be submitted to Assignment Division in accordance with 37 CFR Part 3, to record the assignment in the records of the USPTO. See MPEP 302.08]

The undersigned (whose title is supplied below) is authorized to act on behalf of the assignee.

/Eric L. Maschoff/	November 4, 2021
Signature	Date
Eric L. Maschoff	36,596
Printed or Typed Name	Title or Registration Number

Privacy Act Statement

The **Privacy Act of 1974 (P.L. 93-579)** requires that you be given certain information in connection with your submission of the attached form related to a patent application or patent. Accordingly, pursuant to the requirements of the Act, please be advised that: (1) the general authority for the collection of this information is 35 U.S.C. 2(b)(2); (2) furnishing of the information solicited is voluntary; and (3) the principal purpose for which the information is used by the U.S. Patent and Trademark Office is to process and/or examine your submission related to a patent application or patent. If you do not furnish the requested information, the U.S. Patent and Trademark Office may not be able to process and/or examine your submission, which may result in termination of proceedings or abandonment of the application or expiration of the patent.

The information provided by you in this form will be subject to the following routine uses:

1. The information on this form will be treated confidentially to the extent allowed under the Freedom of Information Act (5 U.S.C. 552) and the Privacy Act (5 U.S.C 552a). Records from this system of records may be disclosed to the Department of Justice to determine whether disclosure of these records is required by the Freedom of Information Act.
2. A record from this system of records may be disclosed, as a routine use, in the course of presenting evidence to a court, magistrate, or administrative tribunal, including disclosures to opposing counsel in the course of settlement negotiations.
3. A record in this system of records may be disclosed, as a routine use, to a Member of Congress submitting a request involving an individual, to whom the record pertains, when the individual has requested assistance from the Member with respect to the subject matter of the record.
4. A record in this system of records may be disclosed, as a routine use, to a contractor of the Agency having need for the information in order to perform a contract. Recipients of information shall be required to comply with the requirements of the Privacy Act of 1974, as amended, pursuant to 5 U.S.C. 552a(m).
5. A record related to an International Application filed under the Patent Cooperation Treaty in this system of records may be disclosed, as a routine use, to the International Bureau of the World Intellectual Property Organization, pursuant to the Patent Cooperation Treaty.
6. A record in this system of records may be disclosed, as a routine use, to another federal agency for purposes of National Security review (35 U.S.C. 181) and for review pursuant to the Atomic Energy Act (42 U.S.C. 218(c)).
7. A record from this system of records may be disclosed, as a routine use, to the Administrator, General Services, or his/her designee, during an inspection of records conducted by GSA as part of that agency's responsibility to recommend improvements in records management practices and programs, under authority of 44 U.S.C. 2904 and 2906. Such disclosure shall be made in accordance with the GSA regulations governing inspection of records for this purpose, and any other relevant (*i.e.*, GSA or Commerce) directive. Such disclosure shall not be used to make determinations about individuals.
8. A record from this system of records may be disclosed, as a routine use, to the public after either publication of the application pursuant to 35 U.S.C. 122(b) or issuance of a patent pursuant to 35 U.S.C. 151. Further, a record may be disclosed, subject to the limitations of 37 CFR 1.14, as a routine use, to the public if the record was filed in an application which became abandoned or in which the proceedings were terminated and which application is referenced by either a published application, an application open to public inspection or an issued patent.
9. A record from this system of records may be disclosed, as a routine use, to a Federal, State, or local law enforcement agency, if the USPTO becomes aware of a violation or potential violation of law or regulation.

Electronic Acknowledgement Receipt

EFS ID:	44206049
Application Number:	14849458
International Application Number:	
Confirmation Number:	5067
Title of Invention:	LEAD ASSEMBLY FOR CONNECTING SOLAR PANEL ARRAYS TO INVERTER
First Named Inventor/Applicant Name:	Dean Solon
Correspondence Address:	Carla Gannon Law - 4891 Long Beach Rd. SE Suite 3-137 Southport NC 28461 US 3365433797 cgannon@carlagannonlaw.com
Filer:	Eric L. Maschoff/Anika Corwell
Filer Authorized By:	Eric L. Maschoff
Attorney Docket Number:	SHOALS-59
Receipt Date:	04-NOV-2021
Filing Date:	09-SEP-2015
Time Stamp:	16:47:27
Application Type:	Utility under 35 USC 111(a)

Payment information:

Submitted with Payment	no

File Listing:

Document Number	Document Description	File Name	File Size(Bytes)/ Message Digest	Multi Part /.zip	Pages (if appl.)
1	Power of Attorney	2021-11-04_POA_S4079-10001 US02.pdf	117336 11e9fe59b9f82759f9f5d62fcf92e78e518aeaaf	no	2
Warnings:					
Information:					
2	Assignee showing of ownership per 37 CFR 3.73	2021-11-04_373c_S4079-10001 US02.pdf	118514 0b74f9543bba4e64fedd49e642b1d23dae7a7fbf	no	3
Warnings:					
Information:					
		Total Files Size (in bytes):	235850		

This Acknowledgement Receipt evidences receipt on the noted date by the USPTO of the indicated documents, characterized by the applicant, and including page counts, where applicable. It serves as evidence of receipt similar to a Post Card, as described in MPEP 503.

<u>New Applications Under 35 U.S.C. 111</u>
If a new application is being filed and the application includes the necessary components for a filing date (see 37 CFR 1.53(b)-(d) and MPEP 506), a Filing Receipt (37 CFR 1.54) will be issued in due course and the date shown on this Acknowledgement Receipt will establish the filing date of the application.
<u>National Stage of an International Application under 35 U.S.C. 371</u>
If a timely submission to enter the national stage of an international application is compliant with the conditions of 35 U.S.C. 371 and other applicable requirements a Form PCT/DO/EO/903 indicating acceptance of the application as a national stage submission under 35 U.S.C. 371 will be issued in addition to the Filing Receipt, in due course.
<u>New International Application Filed with the USPTO as a Receiving Office</u>
If a new international application is being filed and the international application includes the necessary components for an international filing date (see PCT Article 11 and MPEP 1810), a Notification of the International Application Number and of the International Filing Date (Form PCT/RO/105) will be issued in due course, subject to prescriptions concerning national security, and the date shown on this Acknowledgement Receipt will establish the international filing date of the application.

UNITED STATES PATENT AND TRADEMARK OFFICE

UNITED STATES DEPARTMENT OF COMMERCE
United States Patent and Trademark Office
Address: COMMISSIONER FOR PATENTS
P.O. Box 1450
Alexandria, Virginia 22313-1450
www.uspto.gov

APPLICATION NO.	ISSUE DATE	PATENT NO.	ATTORNEY DOCKET NO.	CONFIRMATION NO.
14/849,458	04/27/2021	10992254	SHOALS-59	5067

7590 04/07/2021

Carla Gannon Law
4891 Long Beach Rd. SE
Suite 3-137
Southport, NC 28461

ISSUE NOTIFICATION

The projected patent number and issue date are specified above.

Determination of Patent Term Adjustment under 35 U.S.C. 154 (b)
(application filed on or after May 29, 2000)

The Patent Term Adjustment is 0 day(s). Any patent to issue from the above-identified application will include an indication of the adjustment on the front page.

If a Continued Prosecution Application (CPA) was filed in the above-identified application, the filing date that determines Patent Term Adjustment is the filing date of the most recent CPA.

Applicant will be able to obtain more detailed information by accessing the Patent Application Information Retrieval (PAIR) WEB site (http://pair.uspto.gov).

Any questions regarding the Patent Term Extension or Adjustment determination should be directed to the Office of Patent Legal Administration at (571)-272-7702. Questions relating to issue and publication fee payments should be directed to the Application Assistance Unit (AAU) of the Office of Data Management (ODM) at (571)-272-4200.

APPLICANT(s) (Please see PAIR WEB site http://pair.uspto.gov for additional applicants):

Dean Solon, Gallatin, TN;

The United States represents the largest, most dynamic marketplace in the world and is an unparalleled location for business investment, innovation, and commercialization of new technologies. The USA offers tremendous resources and advantages for those who invest and manufacture goods here. Through SelectUSA, our nation works to encourage and facilitate business investment. To learn more about why the USA is the best country in the world to develop technology, manufacture products, and grow your business, visit SelectUSA.gov.

UNITED STATES PATENT AND TRADEMARK OFFICE

UNITED STATES DEPARTMENT OF COMMERCE
United States Patent and Trademark Office
Address: COMMISSIONER FOR PATENTS
P.O. Box 1450
Alexandria, Virginia 22313-1450
www.uspto.gov

APPLICATION NO.	FILING DATE	FIRST NAMED INVENTOR	ATTORNEY DOCKET NO.	CONFIRMATION NO.
14/849,458	09/09/2015	Dean Solon	SHOALS-59	5067

57825 7590 03/18/2021
CARLA GANNON LAW
Carla L. Gannon, Esq.
8903 E. Oak Island Dr.
Suite 9
Oak Island, NC 28465

EXAMINER
SMITH, ERIC R

ART UNIT	PAPER NUMBER
1726	

NOTIFICATION DATE	DELIVERY MODE
03/18/2021	ELECTRONIC

Please find below and/or attached an Office communication concerning this application or proceeding.

The time period for reply, if any, is set in the attached communication.

Notice of the Office communication was sent electronically on above-indicated "Notification Date" to the following e-mail address(es):

carlagannon@yahoo.com
cgannon@carlagannonlaw.com
docketing@carlagannonlaw.com

Voltage, LLC
EX1021-11

Response to Rule 312 Communication	Application No.	Applicant(s)	
	14/849,458	Solon, Dean	
	Examiner	Art Unit	AIA (FITF) Status
	ERIC R SMITH	1726	Yes

-- The MAILING DATE of this communication appears on the cover sheet with the correspondence address --

1. ☑ The amendment filed on 01 March 2021 under 37 CFR 1.312 has been considered, and has been:
   - a) ☑ entered.
   - b) ☐ entered as directed to matters of form not affecting the scope of the invention.
   - c) ☐ disapproved because the amendment was filed after the payment of the issue fee.
     Any amendment filed after the date the issue fee is paid must be accompanied by a petition under 37 CFR 1.313(c)(1) and the required fee to withdraw the application from issue.
   - d) ☐ disapproved. See explanation below.
   - e) ☐ entered in part. See explanation below.

/ERIC R SMITH/
Primary Examiner, Art Unit 1726

Voltage, LLC
EX1021-12

Smith, Eric (Ryan)

From: Carla L. Gannon <cgannon@carlagannonlaw.com>
Sent: Monday, March 1, 2021 1:39 PM
To: Smith, Eric (Ryan)
Subject: Re: Allowed Case 14/849,458 (Matter SHOALS-59)

Thank you. I just filed it.

Can I go ahead and pay the issue fee anytime or am I supposed to wait on you, for example for a new Notice of Allowance?

-Carla

CARLA GANNON
LAW
PATENTS • TRADEMARKS • COPYRIGHTS
NEW ADDRESS:
4891 LONG BEACH RD. SE
SUITE 3-137
SOUTHPORT, NC 28461
336-543-3797 (C) • 910-805-7619 (O) • 888-686-0354 (F)

This message may contain information that is confidential, subject to attorney-client privilege, attorney work product privilege, and/or another lawfully recognized privilege. If you received this message in error or through inappropriate means, please immediately notify the sender by replying to this message, then permanently delete this message from all storage media, without forwarding or retaining a copy. Thank you.

From: Smith, Eric (Ryan) <Eric.Smith@USPTO.GOV>
Sent: Monday, March 1, 2021 11:45 AM
To: Carla L. Gannon <cgannon@carlagannonlaw.com>
Subject: RE: Allowed Case 14/849,458 (Matter SHOALS-59)

Ms. Gannon,

I think a 312 amendment would be the most efficient way to make this change. I will be on the lookout.

Eric Ryan Smith, Ph. D.
Primary Examiner, AU 1726
(571) 270-7186

From: Carla L. Gannon <cgannon@carlagannonlaw.com>
Sent: Friday, February 26, 2021 5:46 PM

To: Smith, Eric (Ryan) <Eric.Smith@USPTO.GOV>
Subject: Allowed Case 14/849,458 (Matter SHOALS-59)

Dear Examiner Smith --

Just when you thought we were done with this case... it looks as if I have an antecedent basis problem in claim 6. See below.

So sorry!!

Can this be fixed by Examiner's Amendment or should I file an amendment under rule 1.312? Please let me know what is easiest for you.

Thank you (and again, so sorry),
Carla

6. A solar power system comprising:

A. A first plurality of solar panels electrically coupled by a first wire harness to form a first solar array;

B. A second plurality of solar panels electrically coupled by a second wire harness to form a second solar array;

C. A lead assembly including a first drop line electrically connected to said first wire harness, and a 30 amp feeder cable electrically connected to a component selected from the group consisting of a trunk buss jumper, an inverter, a connection unit, a recombiner, and a disconnect unit, said first drop line and said feeder cable electrically connected at a first nexus secured by a compression lug, said compression lug surrounded by an undermold having an inner surface and an outer surface, both surfaces extending in a longitudinal direction of said feeder cable, said inner surface surrounding and fully encasing said compression lug, said inner surface comprised of a first aperture concentric with said securing means and said feeder cable, said first aperture extending continuously through said undermold in said longitudinal direction and having a first diameter. said feeder cable extending continuously through said first aperture. and a second aperture concentric with said first drop line and parallel to said first aperture, said second aperture only partially extending through said undermold in said longitudinal direction. said second aperture having a second diameter smaller than said first diameter said first drop line extending from said second aperture, with said undermold surrounded by an overmold and forming an undermold-overmold interface only at said outer surface, wherein said lead assembly has a voltage rating of 1500 VDC; and

D. A second drop line electrically connected to said second wire harness, said second drop line electrically connected to said feeder cable at a second nexus, wherein the solar power system doesn't include a combiner box upstream of said component.

CARLA GANNON
LAW
PATENTS • TRADEMARKS • COPYRIGHTS
NEW ADDRESS:
4891 LONG BEACH RD. SE
SUITE 3-137
SOUTHPORT, NC 28461
336-543-3797 (C) • 910-805-7819 (O) • 888-686-9354 (F)

This message may contain information that is confidential, subject to attorney-client privilege, attorney work product privilege, and/or another lawfully recognized privilege. If you received this message in error or through inappropriate means, please immediately notify the sender by replying to this message, then permanently delete this message from all storage media, without forwarding or retaining a copy. Thank you.

OK TO ENTER: /E.R.S/

IN THE UNITED STATES PATENT AND TRADEMARK OFFICE

In re Application of: Dean Solon
Serial No.: 14/849,458 **Examiner:** Eric R. Smith
Filed: 09/09/2015 **Art Unit:** 1726
Confirmation No.: 5067
For: LEAD ASSEMBLY FOR CONNECTING SOLAR PANEL ARRAYS TO INVERTER

Commissioner for Patents
PO Box 1450
Alexandria, VA 22313-1450

Sir:

REQUEST FOR CONSIDERATION OF AN AMENDMENT UNDER 37 CFR 1.312

This paper responds to the Notice of Allowance mailed February 9, 2021.

In the event fees are required, Applicant requests that this be considered the requisite petition.

The Commissioner is hereby authorized to charge any fees associated with this case to 506268.

Voltage, LLC
EX1021-16

CHANGE OF CORRESPONDENCE ADDRESS

Application

Application Number	14849458	Art Unit	1726
Filing Date	09-Sep-2015	Examiner Name	ERIC SMITH
First Name Inventor	Dean Solon	Attorney Doc. Number	SHOALS-59

Please change the correspondence address for the above-identified patent application to:

☐ The address associated with Customer Number:	

OR

☒ Firm or Individual Name:			Carla Gannon Law		
Address	4891 Long Beach Rd. SE				
	Suite 3-137				
City	Southport	State	NORTH CAROLINA	Postal Code	28461
Country		UNITED STATES			
Telephone	3365433797	Email	cgannon@carlagannonlaw.com		

Signature :

I certify, in accordance with 37 CFR 1.4(d)(4) that I am an attorney or agent registered to practice before the Patent and Trademark Office who has filed and has been granted power of attorney in this application.

Signature	/Carla L Gannon/	**Date**	03-18-2021
Name	Carla L. Gannon	**Registration Number**	56358

Electronic Patent Application Fee Transmittal

Application Number:	14849458
Filing Date:	09-Sep-2015
Title of Invention:	LEAD ASSEMBLY FOR CONNECTING SOLAR PANEL ARRAYS TO INVERTER
First Named Inventor/Applicant Name:	Dean Solon
Filer:	Carla L. Gannon
Attorney Docket Number:	SHOALS-59

Filed as Small Entity

Filing Fees for Utility under 35 USC 111(a)

Description	Fee Code	Quantity	Amount	Sub-Total in USD($)
Basic Filing:				
UTILITY APPL ISSUE FEE	2501	1	600	600
PUBL. FEE- EARLY, VOLUNTARY, OR NORMAL	1504	1	0	0
Pages:				
Claims:				
Miscellaneous-Filing:				
Petition:				
Patent-Appeals-and-Interference:				

Description	Fee Code	Quantity	Amount	Sub-Total in USD($)
Post-Allowance-and-Post-Issuance:				
Extension-of-Time:				
Miscellaneous:				
			Total in USD ($)	**600**

Electronic Acknowledgement Receipt

EFS ID:	42214195
Application Number:	14849458
International Application Number:	
Confirmation Number:	5067
Title of Invention:	LEAD ASSEMBLY FOR CONNECTING SOLAR PANEL ARRAYS TO INVERTER
First Named Inventor/Applicant Name:	Dean Solon
Customer Number:	57825
Filer:	Carla L. Gannon
Filer Authorized By:	
Attorney Docket Number:	SHOALS-59
Receipt Date:	18-MAR-2021
Filing Date:	09-SEP-2015
Time Stamp:	10:24:47
Application Type:	Utility under 35 USC 111(a)

Payment information:

Submitted with Payment	yes
Payment Type	CARD
Payment was successfully received in RAM	$600
RAM confirmation Number	E20213HA24402181
Deposit Account	
Authorized User	

The Director of the USPTO is hereby authorized to charge indicated fees and credit any overpayment as follows:

File Listing:

Document Number	Document Description	File Name	File Size(Bytes)/ Message Digest	Multi Part /.zip	Pages (if appl.)
1	Issue Fee Payment (PTO-85B)	Web85b.pdf	46032 33508237c3742b506dd8c4c989afd932d039bdce	no	2
Warnings:					
Information:					
2	Change of Address	web85correspondenceaddress.pdf	37593 bb652f9fd0dd5fde6297a7488476a22d5d12d9f5	no	1
Warnings:					
Information:					
3	Fee Worksheet (SB06)	fee-info.pdf	31687 7e89f73852aabc142823ad68c0aa5ddc8f62f91b	no	2
Warnings:					
Information:					
			Total Files Size (in bytes):	115312	

This Acknowledgement Receipt evidences receipt on the noted date by the USPTO of the indicated documents, characterized by the applicant, and including page counts, where applicable. It serves as evidence of receipt similar to a Post Card, as described in MPEP 503.

<u>New Applications Under 35 U.S.C. 111</u>
If a new application is being filed and the application includes the necessary components for a filing date (see 37 CFR 1.53(b)-(d) and MPEP 506), a Filing Receipt (37 CFR 1.54) will be issued in due course and the date shown on this Acknowledgement Receipt will establish the filing date of the application.
<u>National Stage of an International Application under 35 U.S.C. 371</u>
If a timely submission to enter the national stage of an international application is compliant with the conditions of 35 U.S.C. 371 and other applicable requirements a Form PCT/DO/EO/903 indicating acceptance of the application as a national stage submission under 35 U.S.C. 371 will be issued in addition to the Filing Receipt, in due course.
<u>New International Application Filed with the USPTO as a Receiving Office</u>
If a new international application is being filed and the international application includes the necessary components for an international filing date (see PCT Article 11 and MPEP 1810), a Notification of the International Application Number and of the International Filing Date (Form PCT/RO/105) will be issued in due course, subject to prescriptions concerning national security, and the date shown on this Acknowledgement Receipt will establish the international filing date of the application.

Document Description: Issue Fee Payment (PTO-85B)

Issue Fee Transmittal Form

Application Number	Filing Date	First Named Inventor	Atty. Docket No.	Confirmation No.
14849458	09-Sep-2015	Dean Solon	SHOALS-59	5067

TITLE OF INVENTION :

LEAD ASSEMBLY FOR CONNECTING SOLAR PANEL ARRAYS TO INVERTER

Entity Status	Application Type	Art Unit	Class - Subclass	EXAMINER
Small	Utility under 35 USC 111(a)	1726	244000	ERIC SMITH

Issue Fee Due	Publication Due	Total Fee(s) Due	Date Due	Prev. Paid Fee
$600	$0	$600	10-May-2021	$0

1.Change of Correspondence Address and/or Indication Of Fee Address (37 CFR 1.33 & 1.363)

Current Correspondence Address:	Current Indicated Fee Address :
57825 CARLA GANNON LAW Carla L. Gannon, Esq. 8903 E. Oak Island Dr. Suite 9 Oak Island NC 28465 UNITED STATES 336-543-3797 carlagannon@yahoo.com	
☒ Change of correspondence address requested, system generated AIA/122-EFS form attached	☐ Fee Address indication requested, system generated SB/47-EFS form attached

2.Entity Status

Change in Entity Status

○ Applicant certifying micro entity status; system generated Micro Entity certification form attached. See 37 CFR 1.29.
Note: Absent a valid certification of micro entity status, issue fee payment in the micro entity amount will not be accepted at the risk of application abandonment. If this box is checked, you will be prompted to choose a micro entity status on the gross income basis (37 CFR 1.29(a)) or the institution of higher education basis (37 CFR 1.29(d)), and make the applicable certification online.

◉ Applicant asserting small entity status. See 37 CFR 1.27.
Note: If the application was previously under micro entity status, checking this box will be taken to be a notification of loss of entitlement to micro entity status.

○ Applicant changing to regular undiscounted fee status.
Note: Checking this box will be taken to be a notification of loss of entitlement to small or micro entity status, as applicable.

Voltage, LLC
EX1021-22

Document Description: Issue Fee Payment (PTO-85B)

3.The Following Fee(s) Are Submitted:

☒ Issue Fee

☐ I authorize USPTO to apply my previously paid issue fee to the current fees due

☐ Publication Fee

☐ The Director is hereby authorized to apply my previously paid issue fee to the current fee due and to charge deficient fees to Deposit Account Number _____

☐ Advance Order - # of copies _____

☒ If **in addition to** the payment of the issue fee amount submitted with this form, there are any discrepancies in any amount(s) due, the Director is authorized to charge any deficiency, or credit any overpayment, to Deposit Account Number 506268 . The **issue fee must be submitted** with this form. **If payment of the issue fee does not accompany this form, checking this box and providing a deposit account number will NOT be effective to satisfy full payment of the fee(s) due.**

4.Firm and/or Attorney Names To Be Printed

NOTE: If no name is listed, no name will be printed
For printing on the patent front page, list to be displayed as entered

1. CARLA GANNON LAW
2.
3.

5.Assignee Name(s) and Residence Data To Be Printed

PLEASE NOTE: Unless an assignee is identified below, no assignee data will appear on the patent. If an assignee is identified below, the document has been filed for recordation as set forth in 37 CFR 3.11. Completion of this form is NOT a substitute for filing an assignment.

Name	City	State	Country	Category
Shoals Technologies Group, LLC	Portland	TENNESSEE	united states	corporation

6.Signature

I certify, in accordance with 37 CFR 1.4(d)(4) that I am an attorney or agent registered to practice before the Patent and Trademark Office who has filed and has been granted power of attorney in this application. I also certify that this Fee(s) Transmittal form is being transmitted to the USPTO via EFS-WEB on the date indicated below.

Signature	/Carla L Gannon/	**Date**	03-18-2021
Name	Carla L. Gannon	**Registration Number**	56358

UNITED STATES PATENT AND TRADEMARK OFFICE

UNITED STATES DEPARTMENT OF COMMERCE
United States Patent and Trademark Office
Address: COMMISSIONER FOR PATENTS
P.O. Box 1450
Alexandria, Virginia 22313-1450
www.uspto.gov

APPLICATION NO.	FILING DATE	FIRST NAMED INVENTOR	ATTORNEY DOCKET NO.	CONFIRMATION NO.
14/849,458	09/09/2015	Dean Solon	SHOALS-59	5067

57825 7590 03/09/2021
CARLA GANNON LAW
Carla L. Gannon, Esq.
8903 E. Oak Island Dr.
Suite 9
Oak Island, NC 28465

EXAMINER
SMITH, ERIC R

ART UNIT	PAPER NUMBER
1726	

NOTIFICATION DATE	DELIVERY MODE
03/09/2021	ELECTRONIC

Please find below and/or attached an Office communication concerning this application or proceeding.

The time period for reply, if any, is set in the attached communication.

Notice of the Office communication was sent electronically on above-indicated "Notification Date" to the following e-mail address(es):

egannon@carlagannonlaw.com
carlagannon@yahoo.com
docketing@carlagannonlaw.com

PTOL-90A (Rev. 04-07)

UNITED STATES PATENT AND TRADEMARK OFFICE

Commissioner for Patents
United States Patent and Trademark Office
P.O. Box 1450
Alexandria, VA 22313-1450
www.uspto.gov

Application No. : 14849458
Applicant : Solon
Filing Date : 09/09/2015
Date Mailed : 03/09/2021

NOTICE TO FILE CORRECTED APPLICATION PAPERS

Notice of Allowance Mailed

This application has been accorded an Allowance Date and is being prepared for issuance. The application, however, is incomplete for the reasons below.

Applicant is given two (2) months from the mail date of this Notice within which to respond. This time period for reply is extendable under 37 CFR 1.136(a) for only TWO additional MONTHS.

The informalities requiring correction are indicated in the attachment(s). If the informality pertains to the abstract, specification (including claims) or drawings, the informality must be corrected with an amendment in compliance with 37 CFR 1.121 (or, if the application is a reissue application, 37 CFR 1.173). Such an amendment may be filed after payment of the issue fee if limited to correction of informalities noted herein. See Waiver of 37 CFR 1.312 for Documents Required by the Office of Patent Publication, 1280 Off. Gaz. Patent Office 918 (March 23, 2004). In addition, if the informality is not corrected until after payment of the issue fee, for purposes of 35 U.S.C. 154(b)(1)(iv), "all outstanding requirements" will be considered to have been satisfied when the informality has been corrected. A failure to respond within the above-identified time period will result in the application being ABANDONED.

See attachment(s).

A copy of this notice MUST be returned with the reply. Please address response to "Mail Stop Issue Fee, Commissioner for Patents, P.O. Box 1450, Alexandria, VA 22313-1450".

/Quang Nguyen/
Publication Branch
Office of Data Management
(571) 272-4200

Application No. 14849458 **Drawings filed: 09/09/2015**

IDENTIFICATION OF DRAWING DEFICIENCIES

- [ ] There is a hole or the image thereof within the illustration. FIG(s)
- [ ] The illustration is penetrated or traversed by a solid or broken line that is not intended to be part of the drawing, such as a dark line caused by a flaw in the copying process. FIG(s)
- [ ] An ink stamp or the image thereof obscures part of the illustration. FIG(s)
- [ ] The drawing is marred by black smudges, obliterations, or fax/copier marks (for example, speckles or dots in a substantial portion of the drawing). FIG(s)
- [ ] Figure numbers are duplicated or missing. FIG(s)
- [ ] Drawing sheet or figure is missing. FIG(s)
- [ ] Numbers, letters, or reference characters in the drawing have been crossed out or are illegibly handwritten. FIG(s)
- [ ] The character of the lines, numbers, and letters is poor. FIG(s)
- [ ] The drawing's background shows that the original drawing was made on graph paper or other paper with a pattern or decoration. FIG(s)
- [ ] The FIG. number label is placed in a location that causes the drawing to be read upside down. FIG(s)
- [X] Data, a reference number, or part of the drawing is truncated or missing, or a lead line has no reference number. FIG(s) 5, 6
- [ ] The drawing and/or the FIG. label contain(s) foreign language. FIG(s)
- [ ] This utility application contains a photograph of a view that is capable of being illustrated as a line drawing. FIG(s)
- [ ] A petition under 37 CFR 1.84(a)(2) to accept color drawings has been granted, but the brief description of the drawings in the specification does not contain (or has not been amended to contain) the paragraph required by 37 CFR 1.84(a)(2)(iii).
- [ ] This reissue application contains added and/or amended drawings that are not labeled as “New” or “Amended” or “Canceled” as required by 37 CFR 1.173(b)(3). FIG(s)
- [ ] This Design reissue application contains a drawing that is labeled as “Canceled” but is not surrounded by brackets, or a drawing that is surrounded by brackets but is not labeled as “Canceled.” See 37 CFR 1.173(b)(3). FIG(s)
- [ ] OTHER:
- [ ] COMMENTS:

UNITED STATES PATENT AND TRADEMARK OFFICE

UNITED STATES DEPARTMENT OF COMMERCE
United States Patent and Trademark Office
Address: COMMISSIONER FOR PATENTS
P.O. Box 1450
Alexandria, Virginia 22313-1450
www.uspto.gov

APPLICATION NO.	FILING DATE	FIRST NAMED INVENTOR	ATTORNEY DOCKET NO.	CONFIRMATION NO.
14/849,458	09/09/2015	Dean Solon	SHOALS-59	5067

57825 7590 03/09/2021
CARLA GANNON LAW
Carla L. Gannon, Esq.
8903 E. Oak Island Dr.
Suite 9
Oak Island, NC 28465

EXAMINER
SMITH, ERIC R

ART UNIT	PAPER NUMBER
1726	

NOTIFICATION DATE	DELIVERY MODE
03/09/2021	ELECTRONIC

Please find below and/or attached an Office communication concerning this application or proceeding.

The time period for reply, if any, is set in the attached communication.

Notice of the Office communication was sent electronically on above-indicated "Notification Date" to the following e-mail address(es):

egannon@carlagannonlaw.com
carlagannon@yahoo.com
docketing@carlagannonlaw.com

PTOL-90A (Rev. 04-07)

UNITED STATES PATENT AND TRADEMARK OFFICE

Commissioner for Patents
United States Patent and Trademark Office
P.O. Box 1450
Alexandria, VA 22313-1450
www.uspto.gov

Application No. : 14849458
Applicant : Solon
Filing Date : 09/09/2015
Date Mailed : 03/09/2021

NOTICE TO FILE CORRECTED APPLICATION PAPERS

Notice of Allowance Mailed

This application has been accorded an Allowance Date and is being prepared for issuance. The application, however, is incomplete for the reasons below.

Applicant is given two (2) months from the mail date of this Notice within which to respond. This time period for reply is extendable under 37 CFR 1.136(a) for only TWO additional MONTHS.

The informalities requiring correction are indicated in the attachment(s). If the informality pertains to the abstract, specification (including claims) or drawings, the informality must be corrected with an amendment in compliance with 37 CFR 1.121 (or, if the application is a reissue application, 37 CFR 1.173). Such an amendment may be filed after payment of the issue fee if limited to correction of informalities noted herein. See Waiver of 37 CFR 1.312 for Documents Required by the Office of Patent Publication, 1280 Off. Gaz. Patent Office 918 (March 23, 2004). In addition, if the informality is not corrected until after payment of the issue fee, for purposes of 35 U.S.C. 154(b)(1)(iv), "all outstanding requirements" will be considered to have been satisfied when the informality has been corrected. A failure to respond within the above-identified time period will result in the application being ABANDONED.

See attachment(s).

A copy of this notice MUST be returned with the reply. Please address response to "Mail Stop Issue Fee, Commissioner for Patents, P.O. Box 1450, Alexandria, VA 22313-1450".

/Quang Nguyen/
Publication Branch
Office of Data Management
(571) 272-4200

Application No. 14849458 **Drawings filed: 09/09/2015**

IDENTIFICATION OF DRAWING DEFICIENCIES

- [ ] There is a hole or the image thereof within the illustration. FIG(s)
- [ ] The illustration is penetrated or traversed by a solid or broken line that is not intended to be part of the drawing, such as a dark line caused by a flaw in the copying process. FIG(s)
- [ ] An ink stamp or the image thereof obscures part of the illustration. FIG(s)
- [ ] The drawing is marred by black smudges, obliterations, or fax/copier marks (for example, speckles or dots in a substantial portion of the drawing). FIG(s)
- [ ] Figure numbers are duplicated or missing. FIG(s)
- [ ] Drawing sheet or figure is missing. FIG(s)
- [ ] Numbers, letters, or reference characters in the drawing have been crossed out or are illegibly handwritten. FIG(s)
- [ ] The character of the lines, numbers, and letters is poor. FIG(s)
- [ ] The drawing's background shows that the original drawing was made on graph paper or other paper with a pattern or decoration. FIG(s)
- [ ] The FIG. number label is placed in a location that causes the drawing to be read upside down. FIG(s)
- [X] Data, a reference number, or part of the drawing is truncated or missing, or a lead line has no reference number. FIG(s) 5, 6
- [ ] The drawing and/or the FIG. label contain(s) foreign language. FIG(s)
- [ ] This utility application contains a photograph of a view that is capable of being illustrated as a line drawing. FIG(s)
- [ ] A petition under 37 CFR 1.84(a)(2) to accept color drawings has been granted, but the brief description of the drawings in the specification does not contain (or has not been amended to contain) the paragraph required by 37 CFR 1.84(a)(2)(iii).
- [ ] This reissue application contains added and/or amended drawings that are not labeled as “New” or “Amended” or “Canceled” as required by 37 CFR 1.173(b)(3). FIG(s)
- [ ] This Design reissue application contains a drawing that is labeled as “Canceled” but is not surrounded by brackets, or a drawing that is surrounded by brackets but is not labeled as “Canceled.” See 37 CFR 1.173(b)(3). FIG(s)
- [ ] OTHER:
- [ ] COMMENTS:

Electronic Acknowledgement Receipt

EFS ID:	42126068
Application Number:	14849458
International Application Number:	
Confirmation Number:	5067
Title of Invention:	LEAD ASSEMBLY FOR CONNECTING SOLAR PANEL ARRAYS TO INVERTER
First Named Inventor/Applicant Name:	Dean Solon
Customer Number:	57825
Filer:	Carla L. Gannon
Filer Authorized By:	
Attorney Docket Number:	SHOALS-59
Receipt Date:	09-MAR-2021
Filing Date:	09-SEP-2015
Time Stamp:	11:36:42
Application Type:	Utility under 35 USC 111(a)

Payment information:

Submitted with Payment	no

File Listing:

Document Number	Document Description	File Name	File Size(Bytes)/ Message Digest	Multi Part /.zip	Pages (if appl.)
1		ResponseToNTFCAP_SHOALS-59.pdf	241541 e4c12fea7bd058691759e67c6696e3e08e39fcce	yes	8

	Multipart Description/PDF files in .zip description		
	Document Description	**Start**	**End**
	Post Allowance Communication - Incoming	1	4
	Drawings-only black and white line drawings	5	5
	Miscellaneous Incoming Letter	6	8

Warnings:	
Information:	
Total Files Size (in bytes):	241541

This Acknowledgement Receipt evidences receipt on the noted date by the USPTO of the indicated documents, characterized by the applicant, and including page counts, where applicable. It serves as evidence of receipt similar to a Post Card, as described in MPEP 503.

New Applications Under 35 U.S.C. 111
If a new application is being filed and the application includes the necessary components for a filing date (see 37 CFR 1.53(b)-(d) and MPEP 506), a Filing Receipt (37 CFR 1.54) will be issued in due course and the date shown on this Acknowledgement Receipt will establish the filing date of the application.
National Stage of an International Application under 35 U.S.C. 371
If a timely submission to enter the national stage of an international application is compliant with the conditions of 35 U.S.C. 371 and other applicable requirements a Form PCT/DO/EO/903 indicating acceptance of the application as a national stage submission under 35 U.S.C. 371 will be issued in addition to the Filing Receipt, in due course.
New International Application Filed with the USPTO as a Receiving Office
If a new international application is being filed and the international application includes the necessary components for an international filing date (see PCT Article 11 and MPEP 1810), a Notification of the International Application Number and of the International Filing Date (Form PCT/RO/105) will be issued in due course, subject to prescriptions concerning national security, and the date shown on this Acknowledgement Receipt will establish the international filing date of the application.

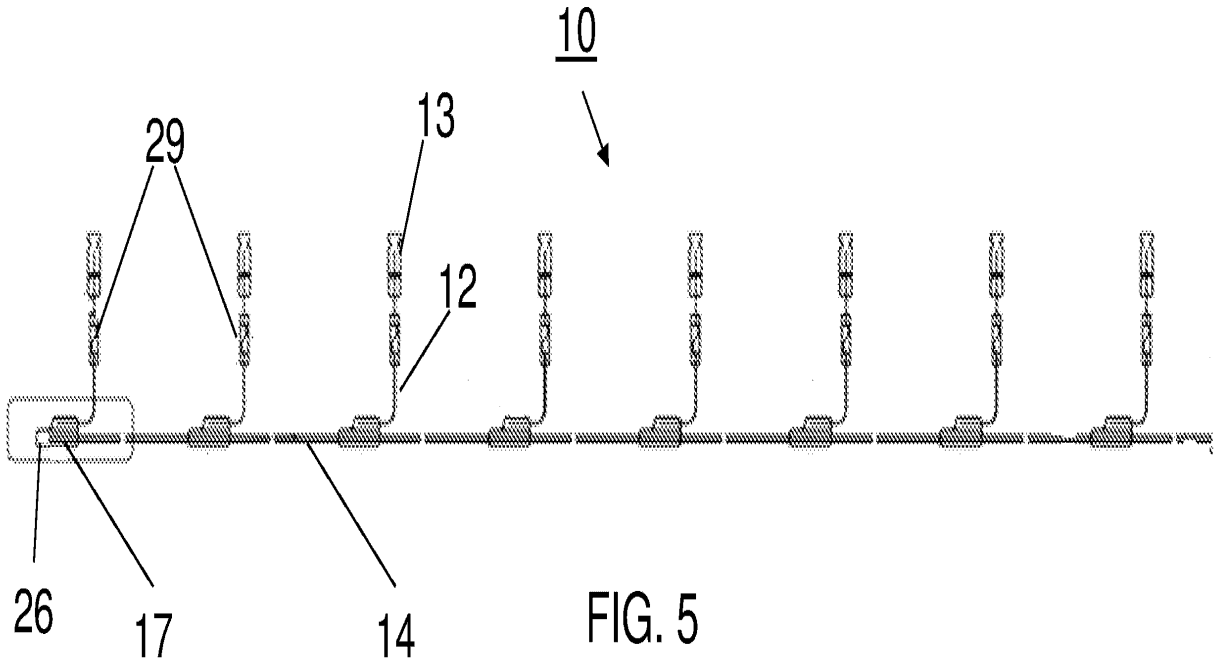

FIG. 5

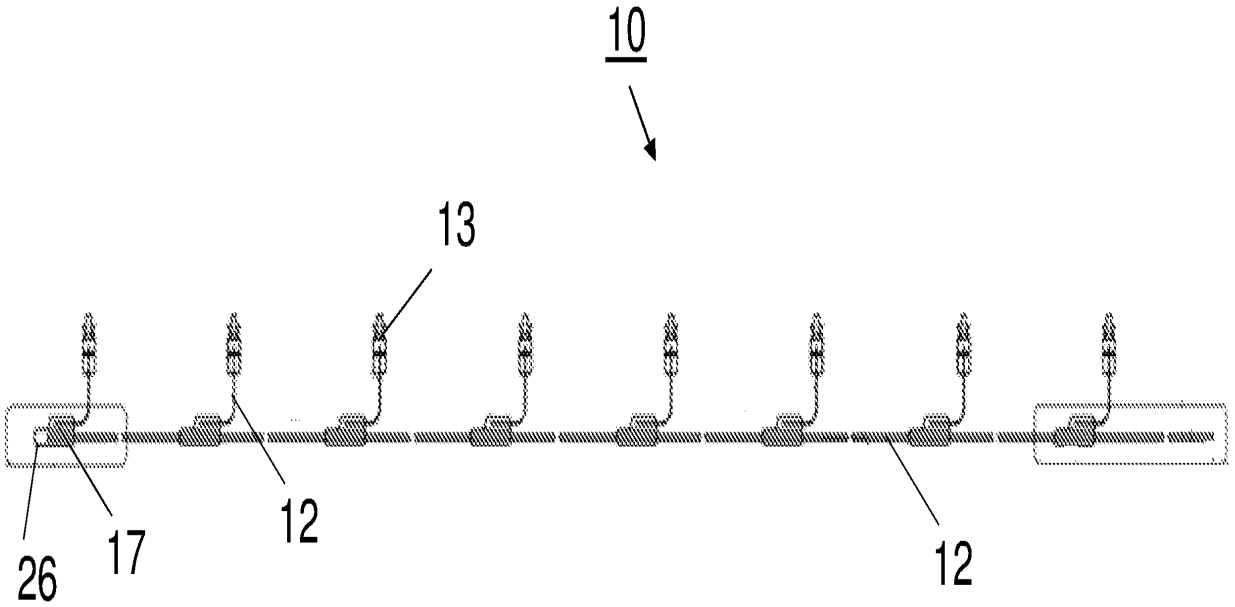

FIG. 6

IN THE UNITED STATES PATENT AND TRADEMARK OFFICE

In re Application of: Dean Solon
Serial No.: 14/849,458 **Examiner:** Eric R. Smith
Filed: 09/09/2015 **Art Unit:** 1726
Confirmation No.: 5067
For: LEAD ASSEMBLY FOR CONNECTING SOLAR PANEL ARRAYS TO INVERTER

Commissioner for Patents
PO Box 1450
Alexandria, VA 22313-1450

Sir:

RESPONSE TO NOTICE TO FILE CORRECTED APPLICATION PAPERS

This paper responds to the Notice to File Corrected Application Papers mailed March 9, 2021.

In the event fees are required, Applicant requests that this be considered the requisite petition.

The Commissioner is hereby authorized to charge any fees associated with this case to 506268.

Voltage, LLC
EX1021-33

Amendments to the Drawings

A replacement sheet containing FIGS. 5 and 6 is contemporaneously submitted. Annotations are shown below in red:

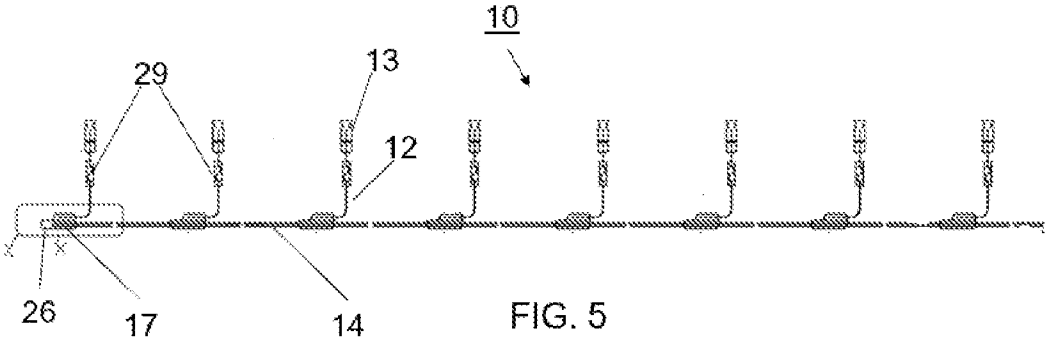

FIG. 5

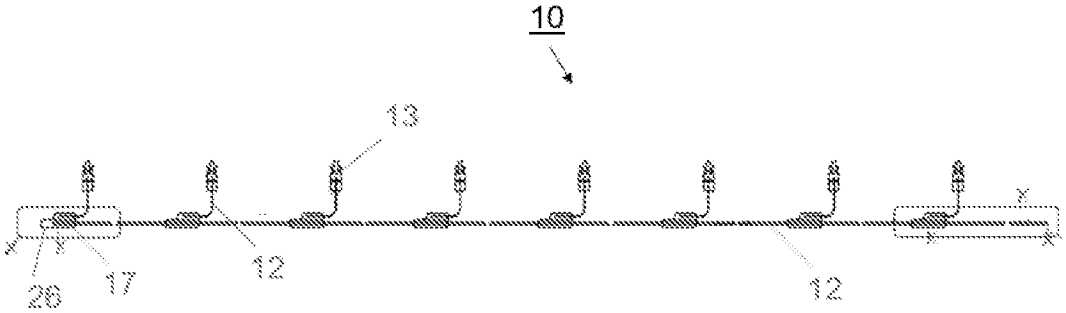

FIG. 6

Remarks

The Notice to File Corrected Application Papers is contemporaneously submitted.

No new matter has been introduced.

.

Conclusion

It is believed that this Response and Replacement Sheet addresses all outstanding issues.

The Office is earnestly encouraged to contact Attorney Gannon by telephone or email to resolve any questions or concerns.

Respectfully submitted,

/Carla L. Gannon, 56,358/

Carla L. Gannon
Registration No. 56,358
Carla Gannon Law
4891 Long Beach Road SE
Suite 3-137
Southport, NC 28461
336-543-3797
cgannon@carlagannonlaw.com

Date: March 9, 2021
File No.: SHOALS-59

DocCode – SCORE

SCORE Placeholder Sheet for IFW Content

Application Number: 14849458 Document Date: 03/09/2021

The presence of this form in the IFW record indicates that the following document type was received in electronic format on the date identified above. This content is stored in the SCORE database.

Since this was an electronic submission, there is no physical artifact folder, no artifact folder is recorded in PALM, and no paper documents or physical media exist. The TIFF images in the IFW record were created from the original documents that are stored in SCORE.

- Drawing

At the time of document entry (noted above):

- USPTO employees may access SCORE content via DAV or via the SCORE web page.
- External customers may access SCORE content via PAIR using the Supplemental Content tab.

Form Revision Date: March 1, 2019

Electronic Acknowledgement Receipt

EFS ID:	42050774
Application Number:	14849458
International Application Number:	
Confirmation Number:	5067
Title of Invention:	LEAD ASSEMBLY FOR CONNECTING SOLAR PANEL ARRAYS TO INVERTER
First Named Inventor/Applicant Name:	Dean Solon
Customer Number:	57825
Filer:	Carla L. Gannon
Filer Authorized By:	
Attorney Docket Number:	SHOALS-59
Receipt Date:	01-MAR-2021
Filing Date:	09-SEP-2015
Time Stamp:	13:35:44
Application Type:	Utility under 35 USC 111(a)

Payment information:

Submitted with Payment	no

File Listing:

Document Number	Document Description	File Name	File Size(Bytes)/ Message Digest	Multi Part /.zip	Pages (if appl.)
1	Amendment after Notice of Allowance (Rule 312)	1312Amendment_SHOALS-59.pdf	41413 9f1221d26b479c5c990414ae6a6df166b1c86bd1	no	9

Warnings:

Information:	
Total Files Size (in bytes):	41413

This Acknowledgement Receipt evidences receipt on the noted date by the USPTO of the indicated documents, characterized by the applicant, and including page counts, where applicable. It serves as evidence of receipt similar to a Post Card, as described in MPEP 503.

New Applications Under 35 U.S.C. 111
If a new application is being filed and the application includes the necessary components for a filing date (see 37 CFR 1.53(b)-(d) and MPEP 506), a Filing Receipt (37 CFR 1.54) will be issued in due course and the date shown on this Acknowledgement Receipt will establish the filing date of the application.
National Stage of an International Application under 35 U.S.C. 371
If a timely submission to enter the national stage of an international application is compliant with the conditions of 35 U.S.C. 371 and other applicable requirements a Form PCT/DO/EO/903 indicating acceptance of the application as a national stage submission under 35 U.S.C. 371 will be issued in addition to the Filing Receipt, in due course.
New International Application Filed with the USPTO as a Receiving Office
If a new international application is being filed and the international application includes the necessary components for an international filing date (see PCT Article 11 and MPEP 1810), a Notification of the International Application Number and of the International Filing Date (Form PCT/RO/105) will be issued in due course, subject to prescriptions concerning national security, and the date shown on this Acknowledgement Receipt will establish the international filing date of the application.

IN THE UNITED STATES PATENT AND TRADEMARK OFFICE

In re Application of: Dean Solon
Serial No.: 14/849,458 **Examiner:** Eric R. Smith
Filed: 09/09/2015 **Art Unit:** 1726
Confirmation No.: 5067
For: LEAD ASSEMBLY FOR CONNECTING SOLAR PANEL ARRAYS TO INVERTER

Commissioner for Patents
PO Box 1450
Alexandria, VA 22313-1450

Sir:

REQUEST FOR CONSIDERATION OF
AN AMENDMENT UNDER 37 CFR 1.312

This paper responds to the Notice of Allowance mailed February 9, 2021.

In the event fees are required, Applicant requests that this be considered the requisite petition.

The Commissioner is hereby authorized to charge any fees associated with this case to 506268.

Voltage, LLC
EX1021-40

Amendments to the Claims

The current status of the claims is listed in the "Listing of the Claims" below. This replaces all previous versions of claims.

Listing of the Claims:

1. (Previously Amended) A lead assembly for use in a solar energy installation including:

A. A first drop line and a second drop line, said first drop line terminating in a drop line connector;

B. At least one 30 amp feeder cable terminating in a feeder cable connector, said first drop line and said at least one feeder cable electrically coupled at a nexus;

C. A means for securing said nexus, said securing means selected from the group consisting of compression lug, soldering, splicing, crimping, and combinations thereof;

D. An undermold having an inner surface and an outer surface, both surfaces extending in a longitudinal direction of said at least one feeder cable, said inner surface surrounding and fully encasing said securing means, said inner surface comprised of a first aperture concentric with said securing means and said at least one feeder cable, said first aperture extending continuously through said undermold in said longitudinal direction and having a first diameter, said at least one feeder cable continuously extending through said first aperture, and a second aperture concentric with said first drop line and parallel to said first aperture, said second aperture only partially extending through said undermold in said longitudinal direction, said second aperture having a second diameter smaller than said first diameter, said first drop line extending from said second aperture; and

E. An overmold surrounding said undermold and forming an undermold-overmold interface only at said outer surface, wherein said lead assembly combines power from a plurality of solar arrays and transmits that power to an inverter in a solar energy installation lacking a combiner box

between said solar arrays and said inverter, and wherein said lead assembly has a voltage rating of 1500 VDC.

2. (Previously Amended) The lead assembly of claim 1 wherein said first drop line includes a section of exposed wire at said nexus.

3. (Original) The lead assembly of claim 2 wherein said at least one feeder cable includes a section of exposed wire at said nexus.

4. (Previously Cancelled)

5. (Previously Amended) The lead assembly of claim 1 wherein said overmold defines at least one aperture.

6. **(Currently Amended)** A solar power system comprising:

A. A first plurality of solar panels electrically coupled by a first wire harness to form a first solar array;

B. A second plurality of solar panels electrically coupled by a second wire harness to form a second solar array;

C. A lead assembly including a first drop line electrically connected to said first wire harness, and a 30 amp feeder cable electrically connected to a component selected from the group consisting of a trunk buss jumper, an inverter, a connection unit, a recombiner, and a disconnect unit, said first drop line and said feeder cable electrically connected at a first nexus secured by a compression lug, said compression lug surrounded by an undermold having an inner surface and an outer surface, both surfaces extending in a longitudinal direction of said feeder cable, said inner surface surrounding and fully encasing said compression lug, said inner surface comprised of a first aperture concentric with said ~~**securing means**~~ **compression lug** and said feeder cable, said first aperture extending continuously through said undermold in said longitudinal direction and having a first diameter, said feeder cable extending continuously through said first aperture, and a second aperture concentric with said first drop line and parallel to said first aperture, said second aperture only partially extending through said undermold in said longitudinal direction, said second aperture having a second diameter smaller than said first diameter, said first drop line extending from said second aperture, with said undermold surrounded by an overmold and forming an undermold-overmold interface only at said outer surface, wherein said lead assembly has a voltage rating of 1500 VDC; and

D. A second drop line electrically connected to said second wire harness, said second drop line electrically connected to said feeder cable at a second nexus, wherein the solar power system doesn't include a combiner box upstream of said component.

7. (Previously Cancelled)

8. (Previously Cancelled)

9. (Original) The solar power system of claim 6 wherein said lead assembly includes an end piece.

10. (Original) The solar power system of claim 6 wherein said first drop line terminates in a drop line connector.

11. (Original) The solar power system of claim 6 wherein said feeder cable terminates in a feeder cable connector.

12. (Original) The solar power system of claim 6 wherein said first drop line includes 18 to 4 gauge wire.

13. (Original) The solar power system of claim 6 wherein said feeder cable includes 6 gauge to 1000MCM wire.

14. (Previously Amended) The solar power system of claim 6 wherein said first nexus is surrounded by said compression lug.

15. (Previously Cancelled)

16. (Previously Cancelled)

17. (Previously Amended) A method of constructing a solar power installation including the steps of:

A. Connecting a first plurality of solar panels to a first wire harness to form a first solar array;

B. Connecting said first wire harness to a first drop line of a lead assembly;

C. Connecting a second plurality of solar panels to a second wire harness to form a second solar array;

D. Connecting said second wire harness to a second drop line of said lead assembly; and

E. Electrically coupling said lead assembly to an inverter without electrically coupling to a combiner box; wherein said lead assembly includes said first drop line electrically connected to said first wire harness, and a 30 amp feeder cable terminating in a feeder cable connector, said first drop line and said feeder cable electrically connected at a first nexus secured by a means for securing said nexus, said securing means selected from the group consisting of compression lug, soldering, splicing, crimping, and combinations thereof, said securing means surrounded by an undermold having an inner surface and an outer surface, both surfaces extending in a longitudinal direction of said feeder cable, said inner surface surrounding and fully encasing said securing means, said inner surface comprised of a first aperture concentric with said securing means and said at least one feeder cable, said first aperture extending continuously through said undermold in said longitudinal direction and having a first diameter, said feeder cable continuously extending through said first aperture, and a second aperture concentric with said first drop line and parallel to said first aperture, said second aperture only partially extending through said undermold in said longitudinal direction, said second aperture having a second diameter smaller than said first diameter, said first drop line extending from said second aperture, with said undermold surrounded by an overmold and forming an undermold-overmold interface only at said outer surface, wherein said lead assembly has a voltage rating of 1500 VDC.

18. (Previously Added) The method of claim 17 wherein said step of electrically coupling said lead assembly to an inverter includes the steps of electrically coupling said feeder cable to said inverter.

19. (Previously Added) The lead assembly of claim 1 wherein said undermold is injection molded.

20. (Previously Added) The lead assembly of claim 1 wherein said overmold is injection molded.

Remarks

Applicant gratefully acknowledges the Notice of Allowance dated February 9, 2021 and respectfully requests that allowed claim 6 be amended to correct a formal matter. It is noted that this requested amendment does not change the scope of the claim.

Examiner Smith's ongoing assistance is noted and appreciated.

.

Conclusion

Applicant appreciates Examiner Smith's consideration of this request.

Examiner Smith is earnestly encouraged to contact Attorney Gannon by telephone or email to resolve any outstanding issues.

Respectfully submitted,

/Carla L. Gannon, 56,358/

Carla L. Gannon
Registration No. 56,358
Carla Gannon Law
4891 Long Beach Road SE
Suite 3-137
Southport, NC 28461
336-543-3797
cgannon@carlagannonlaw.com

Date: March 1, 2021
File No.: SHOALS-59

UNITED STATES PATENT AND TRADEMARK OFFICE

UNITED STATES DEPARTMENT OF COMMERCE
United States Patent and Trademark Office
Address: COMMISSIONER FOR PATENTS
P.O. Box 1450
Alexandria, Virginia 22313-1450
www.uspto.gov

NOTICE OF ALLOWANCE AND FEE(S) DUE

57825 7590 02/09/2021
CARLA GANNON LAW
Carla L. Gannon, Esq.
8903 E. Oak Island Dr.
Suite 9
Oak Island, NC 28465

EXAMINER
SMITH, ERIC R

ART UNIT	PAPER NUMBER
1726	

DATE MAILED: 02/09/2021

APPLICATION NO.	FILING DATE	FIRST NAMED INVENTOR	ATTORNEY DOCKET NO.	CONFIRMATION NO.
14/849,458	09/09/2015	Dean Solon	SHOALS-59	5067

TITLE OF INVENTION: LEAD ASSEMBLY FOR CONNECTING SOLAR PANEL ARRAYS TO INVERTER

APPLN. TYPE	ENTITY STATUS	ISSUE FEE DUE	PUBLICATION FEE DUE	PREV. PAID ISSUE FEE	TOTAL FEE(S) DUE	DATE DUE
nonprovisional	SMALL	$600	$0.00	$0.00	$600	05/10/2021

THE APPLICATION IDENTIFIED ABOVE HAS BEEN EXAMINED AND IS ALLOWED FOR ISSUANCE AS A PATENT. PROSECUTION ON THE MERITS IS CLOSED. THIS NOTICE OF ALLOWANCE IS NOT A GRANT OF PATENT RIGHTS. THIS APPLICATION IS SUBJECT TO WITHDRAWAL FROM ISSUE AT THE INITIATIVE OF THE OFFICE OR UPON PETITION BY THE APPLICANT. SEE 37 CFR 1.313 AND MPEP 1308.

THE ISSUE FEE AND PUBLICATION FEE (IF REQUIRED) MUST BE PAID WITHIN THREE MONTHS FROM THE MAILING DATE OF THIS NOTICE OR THIS APPLICATION SHALL BE REGARDED AS ABANDONED. THIS STATUTORY PERIOD CANNOT BE EXTENDED. SEE 35 U.S.C. 151. THE ISSUE FEE DUE INDICATED ABOVE DOES NOT REFLECT A CREDIT FOR ANY PREVIOUSLY PAID ISSUE FEE IN THIS APPLICATION. IF AN ISSUE FEE HAS PREVIOUSLY BEEN PAID IN THIS APPLICATION (AS SHOWN ABOVE), THE RETURN OF PART B OF THIS FORM WILL BE CONSIDERED A REQUEST TO REAPPLY THE PREVIOUSLY PAID ISSUE FEE TOWARD THE ISSUE FEE NOW DUE.

HOW TO REPLY TO THIS NOTICE:

I. Review the ENTITY STATUS shown above. If the ENTITY STATUS is shown as SMALL or MICRO, verify whether entitlement to that entity status still applies.

If the ENTITY STATUS is the same as shown above, pay the TOTAL FEE(S) DUE shown above.

If the ENTITY STATUS is changed from that shown above, on PART B - FEE(S) TRANSMITTAL, complete section number 5 titled "Change in Entity Status (from status indicated above)".

For purposes of this notice, small entity fees are 1/2 the amount of undiscounted fees, and micro entity fees are 1/2 the amount of small entity fees.

II. PART B - FEE(S) TRANSMITTAL, or its equivalent, must be completed and returned to the United States Patent and Trademark Office (USPTO) with your ISSUE FEE and PUBLICATION FEE (if required). If you are charging the fee(s) to your deposit account, section "4b" of Part B - Fee(s) Transmittal should be completed and an extra copy of the form should be submitted. If an equivalent of Part B is filed, a request to reapply a previously paid issue fee must be clearly made, and delays in processing may occur due to the difficulty in recognizing the paper as an equivalent of Part B.

III. All communications regarding this application must give the application number. Please direct all communications prior to issuance to Mail Stop ISSUE FEE unless advised to the contrary.

IMPORTANT REMINDER: Maintenance fees are due in utility patents issuing on applications filed on or after Dec. 12, 1980. It is patentee's responsibility to ensure timely payment of maintenance fees when due. More information is available at www.uspto.gov/PatentMaintenanceFees.

Voltage, LLC
EX1021-49

PART B - FEE(S) TRANSMITTAL

Complete and send this form, together with applicable fee(s), by mail or fax, or via EFS-Web.

By mail, send to: Mail Stop ISSUE FEE
Commissioner for Patents
P.O. Box 1450
Alexandria, Virginia 22313-1450

By fax, send to: (571)-273-2885

INSTRUCTIONS: This form should be used for transmitting the ISSUE FEE and PUBLICATION FEE (if required). Blocks 1 through 5 should be completed where appropriate. All further correspondence including the Patent, advance orders and notification of maintenance fees will be mailed to the current correspondence address as indicated unless corrected below or directed otherwise in Block 1, by (a) specifying a new correspondence address; and/or (b) indicating a separate "FEE ADDRESS" for maintenance fee notifications.

CURRENT CORRESPONDENCE ADDRESS (Note: Use Block 1 for any change of address)

57825 7590 02/09/2021
CARLA GANNON LAW
Carla L. Gannon, Esq.
8903 E. Oak Island Dr.
Suite 9
Oak Island, NC 28465

Note: A certificate of mailing can only be used for domestic mailings of the Fee(s) Transmittal. This certificate cannot be used for any other accompanying papers. Each additional paper, such as an assignment or formal drawing, must have its own certificate of mailing or transmission.

Certificate of Mailing or Transmission

I hereby certify that this Fee(s) Transmittal is being deposited with the United States Postal Service with sufficient postage for first class mail in an envelope addressed to the Mail Stop ISSUE FEE address above, or being transmitted to the USPTO via EFS-Web or by facsimile to (571) 273-2885, on the date below.

(Typed or printed name)
(Signature)
(Date)

APPLICATION NO.	FILING DATE	FIRST NAMED INVENTOR	ATTORNEY DOCKET NO.	CONFIRMATION NO.
14/849,458	09/09/2015	Dean Solon	SHOALS-59	5067

TITLE OF INVENTION: LEAD ASSEMBLY FOR CONNECTING SOLAR PANEL ARRAYS TO INVERTER

APPLN. TYPE	ENTITY STATUS	ISSUE FEE DUE	PUBLICATION FEE DUE	PREV. PAID ISSUE FEE	TOTAL FEE(S) DUE	DATE DUE
nonprovisional	SMALL	$600	$0.00	$0.00	$600	05/10/2021

EXAMINER	ART UNIT	CLASS-SUBCLASS
SMITH, ERIC R	1726	136-244000

1. Change of correspondence address or indication of "Fee Address" (37 CFR 1.363).

❑ Change of correspondence address (or Change of Correspondence Address form PTO/SB/122) attached.

❑ "Fee Address" indication (or "Fee Address" Indication form PTO/SB/47; Rev 03-09 or more recent) attached. **Use of a Customer Number is required.**

2. For printing on the patent front page, list
(1) The names of up to 3 registered patent attorneys or agents OR, alternatively,
(2) The name of a single firm (having as a member a registered attorney or agent) and the names of up to 2 registered patent attorneys or agents. If no name is listed, no name will be printed.

1_____
2_____
3_____

3. ASSIGNEE NAME AND RESIDENCE DATA TO BE PRINTED ON THE PATENT (print or type)

PLEASE NOTE: Unless an assignee is identified below, no assignee data will appear on the patent. If an assignee is identified below, the document must have been previously recorded, or filed for recordation, as set forth in 37 CFR 3.11 and 37 CFR 3.81(a). Completion of this form is NOT a substitute for filing an assignment.

(A) NAME OF ASSIGNEE (B) RESIDENCE: (CITY and STATE OR COUNTRY)

Please check the appropriate assignee category or categories (will not be printed on the patent) : ❑ Individual ❑ Corporation or other private group entity ❑ Government

4a. Fees submitted: ❑Issue Fee ❑Publication Fee (if required) ❑Advance Order - # of Copies _____

4b. Method of Payment: *(Please first reapply any previously paid fee shown above)*

❑ Electronic Payment via EFS-Web ❑ Enclosed check ❑ Non-electronic payment by credit card (Attach form PTO-2038)

❑ The Director is hereby authorized to charge the required fee(s), any deficiency, or credit any overpayment to Deposit Account No. _____

5. **Change in Entity Status** (from status indicated above)

❑ Applicant certifying micro entity status. See 37 CFR 1.29

❑ Applicant asserting small entity status. See 37 CFR 1.27

❑ Applicant changing to regular undiscounted fee status.

NOTE: Absent a valid certification of Micro Entity Status (see forms PTO/SB/15A and 15B), issue fee payment in the micro entity amount will not be accepted at the risk of application abandonment.
NOTE: If the application was previously under micro entity status, checking this box will be taken to be a notification of loss of entitlement to micro entity status.
NOTE: Checking this box will be taken to be a notification of loss of entitlement to small or micro entity status, as applicable.

NOTE: This form must be signed in accordance with 37 CFR 1.31 and 1.33. See 37 CFR 1.4 for signature requirements and certifications.

Authorized Signature _____ Date _____

Typed or printed name _____ Registration No. _____

Voltage, LLC
EX1021-50

UNITED STATES DEPARTMENT OF COMMERCE
United States Patent and Trademark Office
Address: COMMISSIONER FOR PATENTS
P.O. Box 1450
Alexandria, Virginia 22313-1450
www.uspto.gov

APPLICATION NO.	FILING DATE	FIRST NAMED INVENTOR	ATTORNEY DOCKET NO.	CONFIRMATION NO.
14/849,458	09/09/2015	Dean Solon	SHOALS-59	5067

57825 7590 02/09/2021
CARLA GANNON LAW
Carla L. Gannon, Esq.
8903 E. Oak Island Dr.
Suite 9
Oak Island, NC 28465

EXAMINER
SMITH, ERIC R

ART UNIT	PAPER NUMBER
1726	

DATE MAILED: 02/09/2021

Determination of Patent Term Adjustment under 35 U.S.C. 154 (b)
(Applications filed on or after May 29, 2000)

The Office has discontinued providing a Patent Term Adjustment (PTA) calculation with the Notice of Allowance.

Section 1(h)(2) of the AIA Technical Corrections Act amended 35 U.S.C. 154(b)(3)(B)(i) to eliminate the requirement that the Office provide a patent term adjustment determination with the notice of allowance. See Revisions to Patent Term Adjustment, 78 Fed. Reg. 19416, 19417 (Apr. 1, 2013). Therefore, the Office is no longer providing an initial patent term adjustment determination with the notice of allowance. The Office will continue to provide a patent term adjustment determination with the Issue Notification Letter that is mailed to applicant approximately three weeks prior to the issue date of the patent, and will include the patent term adjustment on the patent. Any request for reconsideration of the patent term adjustment determination (or reinstatement of patent term adjustment) should follow the process outlined in 37 CFR 1.705.

Any questions regarding the Patent Term Extension or Adjustment determination should be directed to the Office of Patent Legal Administration at (571)-272-7702. Questions relating to issue and publication fee payments should be directed to the Customer Service Center of the Office of Patent Publication at 1-(888)-786-0101 or (571)-272-4200.

OMB Clearance and PRA Burden Statement for PTOL-85 Part B

The Paperwork Reduction Act (PRA) of 1995 requires Federal agencies to obtain Office of Management and Budget approval before requesting most types of information from the public. When OMB approves an agency request to collect information from the public, OMB (i) provides a valid OMB Control Number and expiration date for the agency to display on the instrument that will be used to collect the information and (ii) requires the agency to inform the public about the OMB Control Number's legal significance in accordance with 5 CFR 1320.5(b).

The information collected by PTOL-85 Part B is required by 37 CFR 1.311. The information is required to obtain or retain a benefit by the public which is to file (and by the USPTO to process) an application. Confidentiality is governed by 35 U.S.C. 122 and 37 CFR 1.14. This collection is estimated to take 30 minutes to complete, including gathering, preparing, and submitting the completed application form to the USPTO. Time will vary depending upon the individual case. Any comments on the amount of time you require to complete this form and/or suggestions for reducing this burden, should be sent to the Chief Information Officer, U.S. Patent and Trademark Office, U.S. Department of Commerce, P.O. Box 1450, Alexandria, Virginia 22313-1450. DO NOT SEND FEES OR COMPLETED FORMS TO THIS ADDRESS. SEND TO: Commissioner for Patents, P.O. Box 1450, Alexandria, Virginia 22313-1450. Under the Paperwork Reduction Act of 1995, no persons are required to respond to a collection of information unless it displays a valid OMB control number.

Privacy Act Statement

The Privacy Act of 1974 (P.L. 93-579) requires that you be given certain information in connection with your submission of the attached form related to a patent application or patent. Accordingly, pursuant to the requirements of the Act, please be advised that: (1) the general authority for the collection of this information is 35 U.S.C. 2(b)(2); (2) furnishing of the information solicited is voluntary; and (3) the principal purpose for which the information is used by the U.S. Patent and Trademark Office is to process and/or examine your submission related to a patent application or patent. If you do not furnish the requested information, the U.S. Patent and Trademark Office may not be able to process and/or examine your submission, which may result in termination of proceedings or abandonment of the application or expiration of the patent.

The information provided by you in this form will be subject to the following routine uses:

1. The information on this form will be treated confidentially to the extent allowed under the Freedom of Information Act (5 U.S.C. 552) and the Privacy Act (5 U.S.C 552a). Records from this system of records may be disclosed to the Department of Justice to determine whether disclosure of these records is required by the Freedom of Information Act.
2. A record from this system of records may be disclosed, as a routine use, in the course of presenting evidence to a court, magistrate, or administrative tribunal, including disclosures to opposing counsel in the course of settlement negotiations.
3. A record in this system of records may be disclosed, as a routine use, to a Member of Congress submitting a request involving an individual, to whom the record pertains, when the individual has requested assistance from the Member with respect to the subject matter of the record.
4. A record in this system of records may be disclosed, as a routine use, to a contractor of the Agency having need for the information in order to perform a contract. Recipients of information shall be required to comply with the requirements of the Privacy Act of 1974, as amended, pursuant to 5 U.S.C. 552a(m).
5. A record related to an International Application filed under the Patent Cooperation Treaty in this system of records may be disclosed, as a routine use, to the International Bureau of the World Intellectual Property Organization, pursuant to the Patent Cooperation Treaty.
6. A record in this system of records may be disclosed, as a routine use, to another federal agency for purposes of National Security review (35 U.S.C. 181) and for review pursuant to the Atomic Energy Act (42 U.S.C. 218(c)).
7. A record from this system of records may be disclosed, as a routine use, to the Administrator, General Services, or his/her designee, during an inspection of records conducted by GSA as part of that agency's responsibility to recommend improvements in records management practices and programs, under authority of 44 U.S.C. 2904 and 2906. Such disclosure shall be made in accordance with the GSA regulations governing inspection of records for this purpose, and any other relevant (i.e., GSA or Commerce) directive. Such disclosure shall not be used to make determinations about individuals.
8. A record from this system of records may be disclosed, as a routine use, to the public after either publication of the application pursuant to 35 U.S.C. 122(b) or issuance of a patent pursuant to 35 U.S.C. 151. Further, a record may be disclosed, subject to the limitations of 37 CFR 1.14, as a routine use, to the public if the record was filed in an application which became abandoned or in which the proceedings were terminated and which application is referenced by either a published application, an application open to public inspection or an issued patent.
9. A record from this system of records may be disclosed, as a routine use, to a Federal, State, or local law enforcement agency, if the USPTO becomes aware of a violation or potential violation of law or regulation.

Notice of Allowability	Application No. 14/849,458	Applicant(s) Solon, Dean	
	Examiner ERIC R SMITH	Art Unit 1726	AIA (FITF) Status Yes

-- The MAILING DATE of this communication appears on the cover sheet with the correspondence address--

All claims being allowable, PROSECUTION ON THE MERITS IS (OR REMAINS) CLOSED in this application. If not included herewith (or previously mailed), a Notice of Allowance (PTOL-85) or other appropriate communication will be mailed in due course. **THIS NOTICE OF ALLOWABILITY IS NOT A GRANT OF PATENT RIGHTS.** This application is subject to withdrawal from issue at the initiative of the Office or upon petition by the applicant. See 37 CFR 1.313 and MPEP 1308.

1. ☑ This communication is responsive to amendment filed 11/12/2020.
   ☐ A declaration(s)/affidavit(s) under **37 CFR 1.130(b)** was/were filed on _____.

2. ☐ An election was made by the applicant in response to a restriction requirement set forth during the interview on _____; the restriction requirement and election have been incorporated into this action.

3. ☑ The allowed claim(s) is/are See Continuation Sheet . As a result of the allowed claim(s), you may be eligible to benefit from the **Patent Prosecution Highway** program at a participating intellectual property office for the corresponding application. For more information, please see **http://www.uspto.gov/patents/init_events/pph/index.jsp** or send an inquiry to **PPHfeedback@uspto.gov.**

4. ☐ Acknowledgment is made of a claim for foreign priority under 35 U.S.C. § 119(a)-(d) or (f).

   Certified copies:

   a) ☐ All b) ☐ Some *c) ☐ None of the:

   1. ☐ Certified copies of the priority documents have been received.
   2. ☐ Certified copies of the priority documents have been received in Application No. _____ .
   3. ☐ Copies of the certified copies of the priority documents have been received in this national stage application from the International Bureau (PCT Rule 17.2(a)).

   * Certified copies not received: _____ .

Applicant has THREE MONTHS FROM THE "MAILING DATE" of this communication to file a reply complying with the requirements noted below. Failure to timely comply will result in ABANDONMENT of this application.
THIS THREE-MONTH PERIOD IS NOT EXTENDABLE.

5. ☐ CORRECTED DRAWINGS (as "replacement sheets") must be submitted.
   ☐ including changes required by the attached Examiner's Amendment / Comment or in the Office action of Paper No./Mail Date _____ .

   Identifying indicia such as the application number (see 37 CFR 1.84(c)) should be written on the drawings in the front (not the back) of each sheet. Replacement sheet(s) should be labeled as such in the header according to 37 CFR 1.121(d).

6. ☐ DEPOSIT OF and/or INFORMATION about the deposit of BIOLOGICAL MATERIAL must be submitted. Note the attached Examiner's comment regarding REQUIREMENT FOR THE DEPOSIT OF BIOLOGICAL MATERIAL.

Attachment(s)

1. ☐ Notice of References Cited (PTO-892)
2. ☐ Information Disclosure Statements (PTO/SB/08), Paper No./Mail Date _____.
3. ☐ Examiner's Comment Regarding Requirement for Deposit of Biological Material _____.
4. ☐ Interview Summary (PTO-413), Paper No./Mail Date. _____.
5. ☑ Examiner's Amendment/Comment
6. ☑ Examiner's Statement of Reasons for Allowance
7. ☐ Other _____.

/ERIC R SMITH/
Primary Examiner, Art Unit 1726

Voltage, LLC
EX1021-53

Continuation of 3. The allowed claim(s) is/are: 1-3,5-6,9-14 and 17-20

DETAILED ACTION

Notice of Pre-AIA or AIA Status

The present application, filed on or after March 16, 2013, is being examined under the first inventor to file provisions of the AIA.

EXAMINER'S AMENDMENT

An examiner's amendment to the record appears below. Should the changes and/or additions be unacceptable to applicant, an amendment may be filed as provided by 37 CFR 1.312. To ensure consideration of such an amendment, it MUST be submitted no later than the payment of the issue fee.

The application has been amended as follows:

In claim 17: Please delete the existing text and replace it with

--A method of constructing a solar power installation including the steps of:

A. Connecting a first plurality of solar panels to a first wire harness to form a first solar array;

B. Connecting said first wire harness to a first drop line of a lead assembly;

C. Connecting a second plurality of solar panels to a second wire harness to form a second solar array;

D. Connecting said second wire harness to a second drop line of said lead assembly; and

E. Electrically coupling said lead assembly to an inverter without electrically coupling to a combiner box; wherein said lead assembly includes said first drop line electrically connected to said first wire harness, and a 30 amp feeder cable terminating in a feeder cable connector, said first drop line and said feeder cable electrically connected at a first nexus secured by a means for securing said nexus, said securing means selected from the group consisting of compression lug, soldering, splicing, crimping, and combinations thereof, said securing means surrounded by an undermold having an inner surface and an outer surface, both surfaces extending in a longitudinal direction of said feeder cable, said inner surface

surrounding and fully encasing said securing means, said inner surface comprised of a first aperture concentric with said securing means and said at least one feeder cable, said first aperture extending continuously through said undermold in said longitudinal direction and having a first diameter, said feeder cable continuously extending through said first aperture, and a second aperture concentric with said first drop line and parallel to said first aperture, said second aperture only partially extending through said undermold in said longitudinal direction, said second aperture having a second diameter smaller than said first diameter, said first drop line extending from said second aperture, with said undermold surrounded by an overmold and forming an undermold-overmold interface only at said outer surface, wherein said lead assembly has a voltage rating of 1500 VDC.--

In claim 18: Please delete the existing text and replace it with

--The method of claim 17 wherein said step of electrically coupling said lead assembly to an inverter includes the steps of electrically coupling said feeder cable to said inverter.--

Reasons for Allowance

The following is an examiner's statement of reasons for allowance: the prior art does not teach or suggest the claimed lead assembly, solar power system, and method of constructing a solar power installation. **Claims 1-3, 5, 6, 9-14, and 17-20** are therefore allowable.

Any comments considered necessary by applicant must be submitted no later than the payment of the issue fee and, to avoid processing delays, should preferably accompany the issue fee. Such submissions should be clearly labeled "Comments on Statement of Reasons for Allowance."

Conclusion

Any inquiry concerning this communication or earlier communications from the examiner should be directed to ERIC R SMITH whose telephone number is (571)270-7186. The examiner can normally be reached on M-F, 8:30am-5:30pm MST.

Examiner interviews are available via telephone, in-person, and video conferencing using a USPTO supplied web-based collaboration tool. To schedule an interview, applicant is encouraged to use the USPTO Automated Interview Request (AIR) at http://www.uspto.gov/interviewpractice.

If attempts to reach the examiner by telephone are unsuccessful, the examiner's supervisor, Jeffrey Barton can be reached on (571) 272-1307. The fax phone number for the organization where this application or proceeding is assigned is 571-273-8300.

Information regarding the status of an application may be obtained from the Patent Application Information Retrieval (PAIR) system. Status information for published applications may be obtained from either Private PAIR or Public PAIR. Status information for unpublished applications is available through Private PAIR only. For more information about the PAIR system, see https://ppair-my.uspto.gov/pair/PrivatePair. Should you have questions on access to the Private PAIR system, contact the Electronic Business Center (EBC) at 866-217-9197 (toll-free). If you would like assistance from a USPTO Customer Service Representative or access to the automated information system, call 800-786-9199 (IN USA OR CANADA) or 571-272-1000.

ERIC R. SMITH
Primary Examiner
Art Unit 1726

/ERIC R SMITH/
Primary Examiner, Art Unit 1726

Search Notes	Application/Control No.	Applicant(s)/Patent Under Reexamination
	14/849,458	Solon, Dean
	Examiner	Art Unit
	ERIC R SMITH	1726

CPC - Searched*		
Symbol	**Date**	**Examiner**
H01L31/0422,0424,0482,0484,05	1/16/2014	ERS
E04D3/40	1/17/2014	ERS
H01L31/02013,02008,02021	7/1/2014	ERS
H02S40/00-38	5/23/2014	ERS
H01R4/187,18,70	11/30/2017	ERS
H01R3-13/All	4/17/2020	ERS
H01R11/11	4/17/2020	ERS
H01R4/021,023,5205	4/17/2020	ERS
H01R13/5205	4/17/2020	ers
H01R4/027,10	4/17/2020	ERS
H01R9/0509	4/17/2020	ERS

CPC Combination Sets - Searched*		
Symbol	**Date**	**Examiner**

US Classification - Searched*			
Class	**Subclass**	**Date**	**Examiner**
52	173.3	7/16/2013	ERS
136	243-265	7/16/2013	ERS

* See search history printout included with this form or the SEARCH NOTES box below to determine the scope of the search.

Voltage, LLC
EX1021-58

Search Notes	Application/Control No.	Applicant(s)/Patent Under Reexamination
	14/849,458	Solon, Dean
	Examiner	**Art Unit**
	ERIC R SMITH	1726

Search Notes		
Search Notes	**Date**	**Examiner**
Keyword search in USPC subclasses, CPC subgroups, IPC subgroups (see EAST history for search strategy)	5/23/2017	ERS
Inventor search in DAV	5/24/2017	ERS
Keyword search in CPC subgroups (see EAST history for search strategy)	11/30/2017	ERS
Update inventor search in DAV	11/30/2017	ERS
Consulted Fritz Fleming in AU2836	9/13/2018	ERS
Keyword search in EAST databases (see EAST history for search strategy)	9/14/2018	ERS
Updated inventor search in DAV	9/18/2018	ERS
Updated inventor search in DAV	6/6/2019	ERS
Keyword search in EAST databases (see EAST history for search strategy)	6/6/2019	ERS
Search consult with Examiner James Harvey in AU 2833	4/16/2020	ERS
Keyword search in EAST databases (see EAST history for search strategy)	5/8/2020	ERS
Updated inventor search in DAV	5/8/2020	ERS
Updated inventor search in DAV	2/1/2021	ERS

Interference Search			
US Class/CPC Symbol	**US Subclass/CPC Group**	**Date**	**Examiner**
H02S40	30	2/1/2021	ERS
H01R9	03,0509	2/1/2021	ERS
H01R4	70,187,18,70,021,023,5205	2/1/2021	ERS
H01R11	11	2/1/2021	ERS
H01R3	All	2/1/2021	ERS

Voltage LLC
EX1021-59

Issue Classification	Application/Control No.	Applicant(s)/Patent Under Reexamination
	14/849,458	Solon, Dean
	Examiner	**Art Unit**
	ERIC R SMITH	1726

CPC						
Symbol					**Type**	**Version**
H02S	/	40	/	30	F	2014-12-01
H01R	/	9	/	03	I	2013-01-01
H01R	/	4	/	70	I	2013-01-01

CPC Combination Sets								
Symbol					**Type**	**Set**	**Ranking**	**Version**
	/		/					

NONE (Assistant Examiner)	(Date)	**Total Claims Allowed:** 15	
/ERIC R SMITH/ Primary Examiner, Art Unit 1726 (Primary Examiner)	01 February 2021 (Date)	O.G. Print Claim(s) 1	O.G. Print Figure 48

U.S. Patent and Trademark Office

Part of Paper No.: 20210201

Voltage, LLC
EX1021-60

Issue Classification	Application/Control No.	Applicant(s)/Patent Under Reexamination
	14/849,458	Solon, Dean
	Examiner	**Art Unit**
	ERIC R SMITH	1726

INTERNATIONAL CLASSIFICATION				
CLAIMED				
H02S40/30	/	40	/	30
H01R9/03	/	9	/	03
H01R4/70	/	4	/	70

NON-CLAIMED				
	/		/	

US ORIGINAL CLASSIFICATION	
CLASS	**SUBCLASS**

CROSS REFERENCES(S)						
CLASS	**SUBCLASS (ONE SUBCLASS PER BLOCK)**					

NONE (Assistant Examiner)	(Date)	**Total Claims Allowed:** 15	
/ERIC R SMITH/ Primary Examiner, Art Unit 1726 (Primary Examiner)	01 February 2021 (Date)	O.G. Print Claim(s) 1	O.G. Print Figure 48

U.S. Patent and Trademark Office

Part of Paper No.: 20210201

Voltage, LLC
EX1021-61

Issue Classification	Application/Control No.	Applicant(s)/Patent Under Reexamination
	14/849,458	Solon, Dean
	Examiner	**Art Unit**
	ERIC R SMITH	1726

☐ Claims renumbered in the same order as presented by applicant ☐ CPA ☐ T.D. ☐ R.1.47

CLAIMS

Final	Original	Final	Original	Final	Original	Final	Original	Final	Original	Final	Original	Final	Original	Final	Original
1	1	12	13												
2	2	13	14												
3	3	14	17												
4	5	15	18												
7	6	5	19												
8	9	6	20												
9	10														
10	11														
11	12														

NONE (Assistant Examiner)	(Date)	**Total Claims Allowed:** 15	
/ERIC R SMITH/ Primary Examiner, Art Unit 1726 (Primary Examiner)	01 February 2021 (Date)	O.G. Print Claim(s) 1	O.G. Print Figure 48

U.S. Patent and Trademark Office

Part of Paper No.: 20210201

Voltage, LLC
EX1021-62

EAST Search History

EAST Search History (Prior Art)

<This search history is empty>

EAST Search History (Interference)

Ref #	Hits	Search Query	DBs	Default Operator	Plurals	Time Stamp
L1	423	h02s40/30.cpc.	US-PGPUB; USPAT	AND	ON	2021/02/01 13:26
L2	580	h01r9/03.cpc.	US-PGPUB; USPAT	AND	ON	2021/02/01 13:26
L3	1,305	h01r4/70.cpc.	US-PGPUB; USPAT	AND	ON	2021/02/01 13:27
L4	2,119	h01r4/187,18,70.cpc.	US-PGPUB; USPAT	AND	ON	2021/02/01 13:27
L5	144	h01r3/$6.cpc.	US-PGPUB; USPAT	AND	ON	2021/02/01 13:27
L6	98,453	h01r13/$6.cpc.	US-PGPUB; USPAT	AND	ON	2021/02/01 13:27
L7	395	h01r11/11.cpc.	US-PGPUB; USPAT	AND	ON	2021/02/01 13:27
L8	1,022	h01r4/021,023,5205.cpc.	US-PGPUB; USPAT	AND	ON	2021/02/01 13:27
L9	102	h01r9/0509.cpc.	US-PGPUB; USPAT	AND	ON	2021/02/01 13:28
L10	100,440	l1 or l2 or l3 or l4 or l5 or l6 or l7 or l9	US-PGPUB; USPAT	AND	ON	2021/02/01 13:28
L11	4	l10 and (("1500" or "1,500") with (volts or vdc)).clm.	US-PGPUB; USPAT	AND	ON	2021/02/01 13:29
L12	2	l10 and (undermold and overmold).clm.	US-PGPUB; USPAT	AND	ON	2021/02/01 13:29
L13	6	l11 or l12	US-PGPUB; USPAT	AND	ON	2021/02/01 13:29

2/1/2021 1:31:55 PM
C:\Users\esmith3\Documents\EAST\Workspaces\Grid_interconnects_specifics\14849458_lead_assembly.wsp

PTO/SB/06 (09-11)
Approved for use through 1/31/2014. OMB 0651-0032
U.S. Patent and Trademark Office; U.S. DEPARTMENT OF COMMERCE
Under the Paperwork Reduction Act of 1995, no persons are required to respond to a collection of information unless it displays a valid OMB control number.

PATENT APPLICATION FEE DETERMINATION RECORD Substitute for Form PTO-875	Application or Docket Number 14/849,458	Filing Date 09/09/2015	☐ To be Mailed

ENTITY: ☑ LARGE ☐ SMALL ☐ MICRO

APPLICATION AS FILED - PART I

FOR	(Column 1) NUMBER FILED	(Column 2) NUMBER EXTRA		RATE ($)	FEE ($)
☐ BASIC FEE (37 CFR 1.16(a), (b), or (c))	N/A	N/A		N/A	
☐ SEARCH FEE (37 CFR 1.16(k), (i), or (m))	N/A	N/A		N/A	
☐ EXAMINATION FEE (37 CFR 1.16(o), (p), or (q))	N/A	N/A		N/A	
TOTAL CLAIMS (37 CFR 1.16(i))	minus 20 =	*		x $80 =	
INDEPENDENT CLAIMS (37 CFR 1.16(h))	minus 3 =	*		x $420 =	
☐ APPLICATION SIZE FEE (37 CFR 1.16(s))	If the specification and drawings exceed 100 sheets of paper, the application size fee due is $310 ($155 for small entity) for each additional 50 sheets or fraction thereof. See 35 U.S.C. 41(a)(1)(G) and 37 CFR 1.16(s).				
☐ MULTIPLE DEPENDENT CLAIM PRESENT (37 CFR 1.16(j))					
* If the difference in column 1 is less than zero, enter "0" in column 2.				TOTAL	

APPLICATION AS AMENDED - PART II

AMENDMENT	11/12/2020	(Column 1) CLAIMS REMAINING AFTER AMENDMENT		(Column 2) HIGHEST NUMBER PREVIOUSLY PAID FOR	(Column 3) PRESENT EXTRA		RATE ($)	ADDITIONAL FEE ($)
	Total (37 CFR 1.16(i))	* 13	Minus	** 20	= 0		x $100 =	0
	Independent (37 CFR 1.16(h))	* 2	Minus	*** 3	= 0		x $480 =	0
	☐ Application Size Fee (37 CFR 1.16(s))							
	☐ FIRST PRESENTATION OF MULTIPLE DEPENDENT CLAIM (37 CFR 1.16(j))							
							TOTAL ADD'L FEE	0

AMENDMENT		(Column 1) CLAIMS REMAINING AFTER AMENDMENT		(Column 2) HIGHEST NUMBER PREVIOUSLY PAID FOR	(Column 3) PRESENT EXTRA		RATE ($)	ADDITIONAL FEE ($)
	Total (37 CFR 1.16(i))	*	Minus	**	=		x $0 =	
	Independent (37 CFR 1.16(h))	*	Minus	***	=		x $0 =	
	☐ Application Size Fee (37 CFR 1.16(s))							
	☐ FIRST PRESENTATION OF MULTIPLE DEPENDENT CLAIM (37 CFR 1.16(j))							
							TOTAL ADD'L FEE	

* If the entry in column 1 is less than the entry in column 2, write "0" in column 3.	SLIE
** If the "Highest Number Previously Paid For" IN THIS SPACE is less than 20, enter "20".	/DEBORAH R PORTER/
*** If the "Highest Number Previously Paid For" IN THIS SPACE is less than 3, enter "3".	
The "Highest Number Previously Paid For" (Total or Independent) is the highest number found in the appropriate box in column 1.	

This collection of information is required by 37 CFR 1.16. The information is required to obtain or retain a benefit by the public which is to file (and by the USPTO to process) an application. Confidentiality is governed by 35 U.S.C. 122 and 37 CFR 1.14. This collection is estimated to take 12 minutes to complete, including gathering, preparing, and submitting the completed application form to the USPTO. Time will vary depending upon the individual case. Any comments on the amount of time you require to complete this form and/or suggestions for reducing this burden, should be sent to the Chief Information Officer, U.S. Patent and Trademark Office, U.S. Department of Commerce, P.O. Box 1450, Alexandria, VA 22313-1450. DO NOT SEND FEES OR COMPLETED FORMS TO THIS ADDRESS. **SEND TO: Commissioner for Patents, P.O. Box 1450, Alexandria, VA 22313-1450.**

If you need assistance in completing the form, call 1-800-PTO-9199 and select option 2.

RESPONSE TO NON-FINAL OFFICE ACTION

Amendments to the Claims

The current status of the claims is listed in the "Listing of the Claims" below. This replaces all previous versions of claims.

Listing of the Claims:

1. **(Currently Amended)** A lead assembly for use in a solar energy installation including:

A. A first drop line and a second drop line, said first drop line terminating in a drop line connector;

B. At least one 30 amp feeder cable terminating in a feeder cable connector, said first drop line and said at least one feeder cable electrically coupled at a nexus;

C. A means for securing said nexus, said securing means selected from the group consisting of compression lug, soldering, splicing, crimping, and combinations thereof;

D. An undermold having an inner surface and an outer surface, both surfaces extending in a longitudinal direction of said at least one feeder cable, said inner surface surrounding and fully encasing said securing means, said inner surface comprised of a first aperture concentric with said securing means and said at least one feeder cable, said first aperture extending continuously through said undermold in said longitudinal direction and having a first diameter, said at least one feeder cable continuously extending through said first aperture, and a second aperture concentric with said first drop line and parallel to said first aperture, said second aperture only partially extending through said undermold in said longitudinal direction, said second aperture having a second diameter smaller than said first diameter, said first drop line extending from said second aperture; and

E. An overmold surrounding said undermold and forming an undermold-overmold interface only at said outer surface, wherein said lead assembly

combines power from a plurality of solar arrays and transmits that power to an inverter in a solar energy installation lacking a combiner box between said solar arrays and said inverter, and wherein said lead assembly has a voltage rating of 1500 VDC ~~and is suitable for utility-scale installations~~.

2. (Previously Amended) The lead assembly of claim 1 wherein said first drop line includes a section of exposed wire at said nexus.

3. (Original) The lead assembly of claim 2 wherein said at least one feeder cable includes a section of exposed wire at said nexus.

4. (Previously Cancelled)

5. (Previously Amended) The lead assembly of claim 1 wherein said overmold defines at least one aperture.

6. **(Currently Amended)** A solar power system comprising:

A. A first plurality of solar panels electrically coupled by a first wire harness to form a first solar array;

B. A second plurality of solar panels electrically coupled by a second wire harness to form a second solar array;

C. A lead assembly including a first drop line electrically connected to said first wire harness, and a 30 amp feeder cable electrically connected to a component selected from the group consisting of a trunk buss jumper, an inverter, a connection unit, a recombiner, and a disconnect unit, said first drop line and said feeder cable electrically connected at a first nexus secured by a compression lug, said compression lug surrounded by an undermold having an inner surface and an outer surface, both surfaces extending in a longitudinal direction of said feeder cable, said inner surface surrounding and fully encasing said compression lug, said inner surface comprised of a first aperture concentric with said securing means and said feeder cable, said first aperture extending continuously through said undermold in said longitudinal direction and having a first diameter, said feeder cable extending continuously through said first aperture, and a second aperture concentric with said first drop line and parallel to said first aperture, said second aperture only partially extending through said undermold in said longitudinal direction, said second aperture having a second diameter smaller than said first diameter, said first drop line extending from said second aperture, with said undermold surrounded by an overmold and forming an undermold-overmold interface only at said outer surface, wherein said lead assembly has a voltage rating of 1500 VDC ~~and is suitable for utility-scale installations~~; and

D. A second drop line electrically connected to said second wire harness, said second drop line electrically connected to said feeder cable at a second nexus, wherein the solar power system doesn't include a combiner box upstream of said component.

7. (Previously Cancelled)

8. (Previously Cancelled)

9. (Original) The solar power system of claim 6 wherein said lead assembly includes an end piece.

10. (Original) The solar power system of claim 6 wherein said first drop line terminates in a drop line connector.

11. (Original) The solar power system of claim 6 wherein said feeder cable terminates in a feeder cable connector.

12. (Original) The solar power system of claim 6 wherein said first drop line includes 18 to 4 gauge wire.

13. (Original) The solar power system of claim 6 wherein said feeder cable includes 6 gauge to 1000MCM wire.

14. (Previously Amended) The solar power system of claim 6 wherein said first nexus is surrounded by said compression lug.

15. (Previously Cancelled)

16. (Previously Cancelled)

17. (Previously Withdrawn)

18. (Previously Withdrawn)

19. (Previously Added) The lead assembly of claim 1 wherein said undermold is injection molded.

20. (Previously Added) The lead assembly of claim 1 wherein said overmold is injection molded.

Voltage, LLC
EX1021-69

IN THE UNITED STATES PATENT AND TRADEMARK OFFICE

In re Application of: Dean Solon
Serial No.: 14/849,458 **Examiner:** Eric R. Smith
Filed: 09/09/2015 **Art Unit:** 1726
Confirmation No.: 5067
For: LEAD ASSEMBLY FOR CONNECTING SOLAR PANEL ARRAYS TO INVERTER

Commissioner for Patents
PO Box 1450
Alexandria, VA 22313-1450

Sir:

RESPONSE TO NON-FINAL OFFICE ACTION AND
REQUEST FOR EXTENSION OF TIME

This paper responds to the Office Action mailed May 13, 2020.

The requisite 3-month extension fee of $740, thereby permitting that a Response be filed as late as November 13, 2020, is contemporarily submitted.

In the event additional fees are required, Applicant requests that this be considered the requisite petition.

The Commissioner is hereby authorized to charge any fees associated with this case to 506268.

Voltage, LLC
EX1021-70

Electronic Patent Application Fee Transmittal

Application Number:	14849458
Filing Date:	09-Sep-2015
Title of Invention:	LEAD ASSEMBLY FOR CONNECTING SOLAR PANEL ARRAYS TO INVERTER
First Named Inventor/Applicant Name:	Dean Solon
Filer:	Carla L. Gannon
Attorney Docket Number:	SHOALS-59

Filed as Small Entity

Filing Fees for Utility under 35 USC 111(a)

Description	Fee Code	Quantity	Amount	Sub-Total in USD($)
Basic Filing:				
Pages:				
Claims:				
Miscellaneous-Filing:				
Petition:				
Patent-Appeals-and-Interference:				
Post-Allowance-and-Post-Issuance:				
Extension-of-Time:				

Description	Fee Code	Quantity	Amount	Sub-Total in USD($)
Extension - 3 months with $0 paid	2253	1	740	740
Miscellaneous:				
			Total in USD ($)	**740**

Electronic Acknowledgement Receipt

EFS ID:	41103551
Application Number:	14849458
International Application Number:	
Confirmation Number:	5067
Title of Invention:	LEAD ASSEMBLY FOR CONNECTING SOLAR PANEL ARRAYS TO INVERTER
First Named Inventor/Applicant Name:	Dean Solon
Customer Number:	57825
Filer:	Carla L. Gannon
Filer Authorized By:	
Attorney Docket Number:	SHOALS-59
Receipt Date:	12-NOV-2020
Filing Date:	09-SEP-2015
Time Stamp:	11:30:48
Application Type:	Utility under 35 USC 111(a)

Payment information:

Submitted with Payment	yes
Payment Type	CARD
Payment was successfully received in RAM	$740
RAM confirmation Number	E2020ABB38492237
Deposit Account	
Authorized User	

The Director of the USPTO is hereby authorized to charge indicated fees and credit any overpayment as follows:

File Listing:

Document Number	Document Description	File Name	File Size(Bytes)/ Message Digest	Multi Part /.zip	Pages (if appl.)
1		Response_051320_NFOA_SHOALS-59.pdf	43236 4d9681d5ef23df74008fdfdbed52885112b178a7	yes	9

Multipart Description/PDF files in .zip description		
Document Description	**Start**	**End**
Applicant Arguments/Remarks Made in an Amendment	7	9
Amendment/Req. Reconsideration-After Non-Final Reject	2	6
Miscellaneous Incoming Letter	1	1

Warnings:

Information:

2	Fee Worksheet (SB06)	fee-info.pdf	30543 dddf001069eb35ee8c5a8e76099d0e91d9cbe9cc	no	2

Warnings:

Information:

Total Files Size (in bytes):	73779

This Acknowledgement Receipt evidences receipt on the noted date by the USPTO of the indicated documents, characterized by the applicant, and including page counts, where applicable. It serves as evidence of receipt similar to a Post Card, as described in MPEP 503.

New Applications Under 35 U.S.C. 111
If a new application is being filed and the application includes the necessary components for a filing date (see 37 CFR 1.53(b)-(d) and MPEP 506), a Filing Receipt (37 CFR 1.54) will be issued in due course and the date shown on this Acknowledgement Receipt will establish the filing date of the application.
National Stage of an International Application under 35 U.S.C. 371
If a timely submission to enter the national stage of an international application is compliant with the conditions of 35 U.S.C. 371 and other applicable requirements a Form PCT/DO/EO/903 indicating acceptance of the application as a national stage submission under 35 U.S.C. 371 will be issued in addition to the Filing Receipt, in due course.
New International Application Filed with the USPTO as a Receiving Office
If a new international application is being filed and the international application includes the necessary components for an international filing date (see PCT Article 11 and MPEP 1810), a Notification of the International Application Number and of the International Filing Date (Form PCT/RO/105) will be issued in due course, subject to prescriptions concerning national security, and the date shown on this Acknowledgement Receipt will establish the international filing date of the application.

Remarks

Applicant gratefully acknowledges the Office Action dated May 13, 2020. Claims 1, 6, 17 and 18 have been amended. Claims 4, 7, 8, and 15 and 16 were previously cancelled, claims 17 and 18 were previously withdrawn, and claims 19 and 20 were previously added. Accordingly, claims **1**-3; 5; **6**; 9-14; 19 and 20 are currently pending, with no claims allowable at this time.

Examiner Smith indicated in an email dated May 22, 2020 to Attorney Gannon that specific claim amendments would bring the case into condition for allowance. Those specific claim amendments are offered herein.

Applicant respectfully requests a rejoinder of claims 17 and 18, and proposes the following amendments to those previously withdrawn claims:

17. (**PROPOSED**) A method of constructing a solar power installation including the steps of:

A. Connecting a first plurality of solar panels to a first wire harness to form a first solar array;

B. Connecting said first wire harness to ~~the~~a first drop line of a lead assembly;

C. Connecting a second plurality of solar panels to a second wire harness to form a second solar array;

D. Connecting said second wire harness to ~~the~~a second drop line of said lead assembly; and

E. Electrically coupling said lead assembly to an inverter without electrically coupling to a combiner box;

wherein said lead assembly includes said first drop line electrically connected to said first wire harness, and a 30 amp feeder cable terminating in a feeder cable connector, said first drop line and said feeder cable electrically connected at a first nexus secured by a means for securing said nexus, said securing

means selected from the group consisting of compression lug, soldering, splicing, crimping, and combinations thereof, said securing means surrounded by an undermold having an inner surface and an outer surface, both surfaces extending in a longitudinal direction of said feeder cable, said inner surface surrounding and fully encasing said securing means, said inner surface comprised of a first aperture concentric with said securing means and said at least one feeder cable, said first aperture extending continuously through said undermold in said longitudinal direction and having a first diameter, said feeder cable continuously extending through said first aperture, and a second aperture concentric with said first drop line and parallel to said first aperture, said second aperture only partially extending through said undermold in said longitudinal direction, said second aperture having a second diameter smaller than said first diameter, said first drop line extending from said second aperture, with said undermold surrounded by an overmold and forming an undermold-overmold interface only at said outer surface, wherein said lead assembly has a voltage rating of 1500 VDC.

18. (**PROPOSED**) The method of claim 17 wherein said step of electrically coupling said lead assembly to an inverter includes the steps of electrically coupling ~~a~~ said feeder cable to said inverter.

Conclusion

For the reasons set forth herein, Applicant believes all claims are allowable over the art of record.

Examiner Smith is earnestly encouraged to contact Attorney Gannon by telephone or email to resolve any outstanding issues, or to discuss claim amendments which would facilitate allowance.

Respectfully submitted,

/Carla L. Gannon, 56,358/

Carla L. Gannon
Registration No. 56,358
Carla Gannon Law
4891 Long Beach Road SE
Suite 3-137
Southport, NC 28461
336-543-3797
cgannon@carlagannonlaw.com

Date: November 12, 2020
File No.: SHOALS-59

Voltage, LLC
EX1021-78

UNITED STATES PATENT AND TRADEMARK OFFICE

UNITED STATES DEPARTMENT OF COMMERCE
United States Patent and Trademark Office
Address: COMMISSIONER FOR PATENTS
P.O. Box 1450
Alexandria, Virginia 22313-1450
www.uspto.gov

APPLICATION NO.	FILING DATE	FIRST NAMED INVENTOR	ATTORNEY DOCKET NO.	CONFIRMATION NO.
14/849,458	09/09/2015	Dean Solon	SHOALS-59	5067

57825 7590 05/13/2020
CARLA GANNON LAW
Carla L. Gannon, Esq.
8903 E. Oak Island Dr.
Suite 9
Oak Island, NC 28465

EXAMINER
SMITH, ERIC R

ART UNIT	PAPER NUMBER
1726	

NOTIFICATION DATE	DELIVERY MODE
05/13/2020	ELECTRONIC

Please find below and/or attached an Office communication concerning this application or proceeding.

The time period for reply, if any, is set in the attached communication.

Notice of the Office communication was sent electronically on above-indicated "Notification Date" to the following e-mail address(es):

carlagannon@yahoo.com
cgannon@carlagannonlaw.com
docketing@carlagannonlaw.com

Voltage, LLC
EX1021-79

Office Action Summary	Application No. 14/849,458	Applicant(s) Solon, Dean	
	Examiner ERIC R SMITH	Art Unit 1726	AIA (FITF) Status Yes

-- The MAILING DATE of this communication appears on the cover sheet with the correspondence address --

Period for Reply

A SHORTENED STATUTORY PERIOD FOR REPLY IS SET TO EXPIRE 3 MONTHS FROM THE MAILING DATE OF THIS COMMUNICATION.

- Extensions of time may be available under the provisions of 37 CFR 1.136(a). In no event, however, may a reply be timely filed after SIX (6) MONTHS from the mailing date of this communication.
- If NO period for reply is specified above, the maximum statutory period will apply and will expire SIX (6) MONTHS from the mailing date of this communication.
- Failure to reply within the set or extended period for reply will, by statute, cause the application to become ABANDONED (35 U.S.C. § 133). Any reply received by the Office later than three months after the mailing date of this communication, even if timely filed, may reduce any earned patent term adjustment. See 37 CFR 1.704(b).

Status

1)☑ Responsive to communication(s) filed on 12/11/2019.

☐ A declaration(s)/affidavit(s) under **37 CFR 1.130(b)** was/were filed on _____.

2a)☐ This action is **FINAL.** 2b) ☑ This action is non-final.

3)☐ An election was made by the applicant in response to a restriction requirement set forth during the interview on _____; the restriction requirement and election have been incorporated into this action.

4)☐ Since this application is in condition for allowance except for formal matters, prosecution as to the merits is closed in accordance with the practice under *Ex parte Quayle*, 1935 C.D. 11, 453 O.G. 213.

Disposition of Claims*

5) ☑ Claim(s) 1-3,5-6,9-14 and 17-20 is/are pending in the application.

5a) Of the above claim(s) 17-18 is/are withdrawn from consideration.

6) ☐ Claim(s) _____ is/are allowed.

7) ☑ Claim(s) 1-3,5-6,9-14 and 19-20 is/are rejected.

8) ☐ Claim(s) _____ is/are objected to.

9) ☐ Claim(s) _____ are subject to restriction and/or election requirement

* If any claims have been determined allowable, you may be eligible to benefit from the **Patent Prosecution Highway** program at a participating intellectual property office for the corresponding application. For more information, please see http://www.uspto.gov/patents/init_events/pph/index.jsp or send an inquiry to **PPHfeedback@uspto.gov.**

Application Papers

10)☐ The specification is objected to by the Examiner.

11)☐ The drawing(s) filed on _____ is/are: a)☐ accepted or b)☐ objected to by the Examiner.

Applicant may not request that any objection to the drawing(s) be held in abeyance. See 37 CFR 1.85(a).

Replacement drawing sheet(s) including the correction is required if the drawing(s) is objected to. See 37 CFR 1.121(d).

Priority under 35 U.S.C. § 119

12)☐ Acknowledgment is made of a claim for foreign priority under 35 U.S.C. § 119(a)-(d) or (f).

Certified copies:

a)☐ All b)☐ Some** c)☐ None of the:

1.☐ Certified copies of the priority documents have been received.

2.☐ Certified copies of the priority documents have been received in Application No. _____.

3.☐ Copies of the certified copies of the priority documents have been received in this National Stage application from the International Bureau (PCT Rule 17.2(a)).

** See the attached detailed Office action for a list of the certified copies not received.

Attachment(s)

1) ☑ Notice of References Cited (PTO-892)

2) ☐ Information Disclosure Statement(s) (PTO/SB/08a and/or PTO/SB/08b) Paper No(s)/Mail Date _____.

3) ☐ Interview Summary (PTO-413) Paper No(s)/Mail Date _____.

4) ☐ Other: _____.

Voltage, LLC
EX1021-80

DETAILED ACTION

Notice of Pre-AIA or AIA Status

The present application, filed on or after March 16, 2013, is being examined under the first inventor to file provisions of the AIA.

Continued Examination Under 37 CFR 1.114

A request for continued examination under 37 CFR 1.114, including the fee set forth in 37 CFR 1.17(e), was filed in this application after final rejection. Since this application is eligible for continued examination under 37 CFR 1.114, and the fee set forth in 37 CFR 1.17(e) has been timely paid, the finality of the previous Office action has been withdrawn pursuant to 37 CFR 1.114. Applicant's submission filed on 12/11/2019 has been entered.

Priority

Applicant's claim for the benefit of a prior-filed application under 35 U.S.C. 119(e) or under 35 U.S.C. 120, 121, 365(c), or 386(c) is acknowledged. Applicant has not complied with one or more conditions for receiving the benefit of an earlier filing date under 35 U.S.C. 119(e) as follows:

The later-filed application must be an application for a patent for an invention which is also disclosed in the prior application (the parent or original nonprovisional application or provisional application). The disclosure of the invention in the parent application and in the later-filed application must be sufficient to comply with the requirements of 35 U.S.C. 112(a) or the first paragraph of pre-AIA 35 U.S.C. 112, except for the best mode requirement. See *Transco Products, Inc. v. Performance Contracting, Inc.*, 38 F.3d 551, 32 USPQ2d 1077 (Fed. Cir. 1994)

The disclosure of the prior-filed application, Application No. 62/047,773, fails to provide adequate support or enablement in the manner provided by 35 U.S.C. 112(a) or pre-AIA 35 U.S.C. 112,

first paragraph for one or more claims of this application. Instant claims 1-3, 5, 6, 9-14 recite limitations which lack support in the provisional application, such as, the limitation that the feeder cable is rated at 30 amps and that the lead assembly has a voltage rating of 1500 VDC. The effective filing date of the claims is therefore 9/9/2015.

Response to Amendment

The amendment filed 12/11/2019 does not place the application in condition for allowance.

The previous art rejections are withdrawn due to Applicant's amendment.

New rejections follow.

Claim Interpretation

The examiner notes that claim 1 recites the phrase "a means for securing said nexus". In some circumstances, use of the word "means" (or "step for") in a claim with functional language creates a rebuttable presumption that the claim element is to be treated in accordance with 35 U.S.C. 112(f) (pre-AIA35 U.S.C. 112, sixth paragraph). The presumption that35 U.S.C. 112(f) (pre-AIA35 U.S.C. 112, sixth paragraph) is invoked is rebutted when the function is recited with sufficient structure, material, or acts within the claim itself to entirely perform the recited function. The phrase is immediately followed by a Markush group of potential structural elements or product-by-process limitations which would fulfill such means. Therefore the phrase is not interpreted to be an invocation of 35 U.S.C. 112(f) (pre-AIA35 U.S.C. 112, sixth paragraph), as the Markush group recites sufficient structure, materials or acts to perform the recited function. Further, the examiner notes that the discussion of such means at the bottom of page 9 of the instant specification is no narrower in scope than the Markush group. For more information, see MPEP § 2173 *etseq*. and *Supplementary Examination Guidelines for Determining*

Compliance With 35 U.S.C. 112 and for Treatment of Related Issues in Patent Applications, 76 FR 7162, 7167 (Feb. 9, 2011).

Claims 1 and 6 recite that the lead assembly has a voltage rating of a particular value. The definition of "voltage rating" is "the maximum sustained voltage that can be safely applied to an electric device without risking the possibility of electric breakdown. Also known as working voltage."

Claim Rejections - 35 USC § 112

The following is a quotation of the first paragraph of 35 U.S.C. 112(a):

> (a) IN GENERAL.—The specification shall contain a written description of the invention, and of the manner and process of making and using it, in such full, clear, concise, and exact terms as to enable any person skilled in the art to which it pertains, or with which it is most nearly connected, to make and use the same, and shall set forth the best mode contemplated by the inventor or joint inventor of carrying out the invention.

The following is a quotation of the first paragraph of pre-AIA 35 U.S.C. 112:

> The specification shall contain a written description of the invention, and of the manner and process of making and using it, in such full, clear, concise, and exact terms as to enable any person skilled in the art to which it pertains, or with which it is most nearly connected, to make and use the same, and shall set forth the best mode contemplated by the inventor of carrying out his invention.

Claims 1-3, 5, 6, and 9-14 rejected under 35 U.S.C. 112(a) or 35 U.S.C. 112 (pre-AIA), first paragraph, as failing to comply with the written description requirement. The claim(s) contains subject matter which was not described in the specification in such a way as to reasonably convey to one skilled in the relevant art that the inventor or a joint inventor, or for pre-AIA the inventor(s), at the time the application was filed, had possession of the claimed invention.

Claims 1 and 6 recite that the lead assembly is suitable for utility-scale installations. While there is a recitation on page 1 of the instant specification that an inverter input power from solar panels into a grid, the phrase “suitable for utility-scale installations” is not recited. Further a skilled artisan would not inherently understand that the lead assembly of the disclosure is suitable for utility-scale installations,

based on the disclosure as originally filed. Therefore a skilled artisan would not understand that the inventor had possession of the claimed invention at the effective date of filing of the application. **Claims 2, 3, 5, 9-14, and 19 and 20** are also rejected based on their dependence from claims 1 or 6.

> The following is a quotation of 35 U.S.C. 112(b):
> (b) CONCLUSION.—The specification shall conclude with one or more claims particularly pointing out and distinctly claiming the subject matter which the inventor or a joint inventor regards as the invention.

> The following is a quotation of 35 U.S.C. 112 (pre-AIA), second paragraph:
> The specification shall conclude with one or more claims particularly pointing out and distinctly claiming the subject matter which the applicant regards as his invention.

Claim 1-3, 5, 6, and 9-14 rejected under 35 U.S.C. 112(b) or 35 U.S.C. 112 (pre-AIA), second paragraph, as being indefinite for failing to particularly point out and distinctly claim the subject matter which the inventor or a joint inventor, or for pre-AIA the applicant regards as the invention.

Claims 1 and 6 recite that the lead assembly is suitable for utility-scale installations. While there is a recitation on page 1 of the instant specification that an inverter input power from solar panels into a grid, the scope of the phrase "suitable for utility-scale installations" is detailed. A skilled artisan would understand that some components of the lead assembly are capable of carrying 30 amps in current, and the assembly is capable of maintaining a voltage of 1500 VDC, but there is insufficient description to establish that it is inherently suitable for utility-scale installations. Put another way, the examiner does not understand "suitable for utility-scale installations" to be a commonly used term of the art with a definite meaning that clearly describes what is included and excluded by the phrase. Are some lead assemblies having a 30 amp feeder cable and voltage rating of 1500 VDC that are **not** suitable for utility-scale installations? If so, what structure is present in the claimed invention that differentiates it from such (hypothetical) lead assemblies? Would a lead assembly with a 20 amp feeder cable and 1000 VDC voltage rating be suitable for utility scale installations? Such distinctions cannot be determined from the disclosure as originally filed, and the claims are indefinite.

Claims 2, 3, 5, 9-14, 19 and 20 are also rejected based on their dependence from claims 1 or 6.

Claim Rejections - 35 USC § 103

The text of those sections of Title 35, U.S. Code not included in this action can be found in a prior Office action.

Claims 1-3, 5, 19, and 20 is/are rejected under 35 U.S.C. 103 as being unpatentable over US PGPub 2010/0139733 to Jonczyk (of record), and further in view of US PGPub 2012/01217973 to Avrutsky (of record), US Patent 5,316,789 to Ookuma, and US PGPub 2011/0209741 to Solon II.

Regarding claims 1-3, 5, 19, and 20, Jonczyk teaches a lead assembly including

A. a first drop line 56 and a second drop line 58, the first drop line terminating in a drop line connector 66 (Figs. 2, 3, ¶0025, 0026, 0029, 0030)

B. at least one feeder cable (analogous element 52) terminating in a feeder cable connector 74, the first drop line 56 and the at least one feeder cable electrically coupled at a nexus (the two cables physically meet a nexus coincident with the cutout 4 in Fig. 3, ¶0027, 0031, 0032)

C. a means for securing the nexus, the securing means being a crimping (element 32 of Fig. 4 is a crimp barrel)

D. a mold 82 having an inner surface and an outer surface, the inner surface surrounding and fully encasing the securing means 32.

Jonczyk teaches that the feeder cable (described as being formed of primary conductor in ¶0028) may include 8 gauge wire, having a current rating of 30 amps (¶0025, 0027). Therefore a skilled artisan would understand that the feeder cable is a 30 amp feeder cable.

Jonczyk does not teach that the mold 82 is an undermold, with the undermold surrounded by an overmold and forming an overmold-undermold interface only at the outer surface. Ookuma also teaches a mold (element 11 of Fig. 2) within which a means for securing a nexus (6) between cables and lines (5)

is formed (C3/L55-61, C4/L17-29), wherein an overmold (element 1 of Fig. 2, 1/4 of Fig. 5) is formed to surround the undermold and form an undermold-overmold interface only at the outer surface of the undermold, so as to establish a double water-proofing around the nexus (C4/L38-43, C4/L60-C5/L10). Therefore it would have been obvious as of the effective filing date of the claimed invention for a person having ordinary skill in the art to form an overmold surrounding the mold of Jonczyk, such that the mold is an undermold having an inner surface and outer surface, and to further form an overmold surrounding the undermold and forming an undermold-overmold interface only at the outer surface in order to double-waterproof the nexus.

Jonczyk teaches that the lead assembly provides a DC voltage generated by solar arrays producing a "high voltage" (¶0002) to a downstream device which can convert the power to AC voltage (¶0040). Further, Jonczyk teaches that the conventional DC voltage ("final voltage" of ¶0036) of 600 V or 1000 V fed to this downstream device, with voltages higher than 1000 V being contemplated (¶0002, 0036). Further, the wires/conductor used to form the drop lines and feeder cables and other elements such as fuses have voltage ratings of "at least" 600 VDC or 1000 VDC that can be chosen to accommodate the final voltage (¶0025, 0027,0028, 0030). Solon II further teaches that it would have been obvious as of the effective filing date of the claimed invention for a person having ordinary skill in the art to form a lead assembly to carry a "high voltage" of 1500 VDC (¶0030). The use of a known technique to improve similar devices (methods or products) in the same way is likely to be obvious. See *KSR International Co. v. Teleflex Inc.*, 550 U.S. 398, 415-421, USPQ2d 1385, 1395 – 97 (2007) (see MPEP § 2143, C.).

Therefore it would have been obvious as of the effective filing date of the claimed invention for a person having ordinary skill in the art to vary the voltage rating to at least as high as 1500 VDC to accommodate the ultimate electrical output of the system. A range can be disclosed in multiple prior art references instead of in a single prior art reference depending on the specific facts of the case. Iron Grip

Barbell Co., Inc. v. USA Sports, Inc., 392 F.3d 1317, 1322, 73 USPQ2d 1225, 1228 (Fed. Cir. 2004). MPEP §2144.05.I.

The claim is drawn to a lead assembly. The limitations of the preamble that the lead assembly is for use in a solar energy installation, and that the lead assembly combines power from a plurality of solar arrays and transmits that power to an inverter in a solar energy installation lacking a combiner box between the solar arrays and the inverter are intended use limitations. Intended use limitations are given weight to the extent that the prior art structure is capable of performing the intended use. See MPEP §2111.02, 2112.01 and 2114-2115. The examiner interprets the lead assembly of modified-Jonczyk to necessarily be capable of performing those intended uses, as the lead assembly has the recited structure. Where the claimed and prior art products are identical or substantially identical in structure or composition, or are produced by identical or substantially identical processes, a prima facie case of either anticipation or obviousness has been established. In re Best, 562 F.2d 1252, 1255,195 USPQ 430, 433 (CCPA 1977). "When the PTO shows a sound basis for believing that the products of the applicant and the prior art are the same, the applicant has the burden of showing that they are not." In re Spada, 911 F.2d 705, 709,15 USPQ2d 1655,1658 (Fed. Cir. 1990). Further, Jonczyk teaches that such a lead assembly is capable of performing several of those intended uses (Fig. 12, ¶0040).

In the event that the intended use limitations can be shown to define the structure or properties of the claimed assembly, Jonczyk teaches that such a lead assembly is capable of being used in a solar energy installation 240, to combine power from a plurality of solar arrays 242 and transmit the power to an inverter. Avrutsky teaches a similar installation (element 100 of Fig. 1) with an analogous lead assembly (105), and teaches that such an installation may comprise a combiner box (106) between a plurality of solar arrays and an inverter (103), or that such a combiner box may alternatively be omitted ("the string bus 105 can be connected to the inverter 105 directly or as a part of a mesh network or combiner boxes or fuse boxes", ¶0028,0029). The omission of an element and its function is obvious if

the function of the element is not desired. MPEP §2144.04.11. Therefore it would have been obvious to a person having ordinary skill in the art as of the effective filing date of the claimed invention that the claimed lead assembly could be used in a solar energy installation lacking a combiner box between solar arrays and the inverter, as Avrutsky teaches that a combiner box may be omitted if desired.

As noted above, the limitation that the lead assembly is suitable for utility-scale installations renders the claim indefinite, and cannot be clearly construed from the disclosure. The combination of references teaches a lead assembly with the claimed limitations, and therefore it is expected that it is suitable for utility-scale installations. Further, Jonczyk teaches that the lead assembly of that invention may supply a power grid (¶0002).

Per claims 2 and 3, modified-Jonczyk teaches the limitations of claim 1. Jonczyk teaches that the first drop line 56 and the at least one feeder cable 52 each include a section of exposed wire at the nexus (Fig.4, ¶0032).

Per claim 5, modified-Jonczyk teaches the limitations of claim 1. Ookuma teaches that the overmold (1) of that invention defines apertures (the portions from which cables 12 emerge, on the left and right of Figs. 2, 5) which allow cables and lines access to the nexus within (see previously cited passages). Since the combination of references share the features of cables and lines which require access to the nexus, a skilled artisan would form the overmold to define at least one aperture in order to allow cables and lines to access the nexus.

Per claims 19 and 20, modified-Jonczyk teaches the limitations of claim 1. The limitations that the undermold and overmold are injection molded are product-by-process limitations. The patentability of a product does not depend on its method of production. If the product in the product-by-process claim is the same as or obvious from a product of the prior art, the claim is unpatentable even though the prior product was made by a different process." In re Thorpe, 777 F.2d 695, 698, 227 USPQ 964,966

(Fed. Cir. 1985). MPEP §2113.1. The combination of references teaches the structure of the claimed undermold and overmold.

Claims 6, 9-12 and 14 is/are rejected under 35 U.S.C. 103 as being unpatentable over Jonczyk, and further in view of Avrutsky, Ookuma, Solon II, and US PGPub 2010/0258157 to Arai (of record).

Regarding claims 6, 9-12 and 14, Jonczyk teaches a solar power system comprising

A. a first plurality of solar panels 244 (e. g. top left element 242 in Fig. 12) electrically coupled to form a first solar array (¶0039, 0040)

B. a second plurality of solar panels 244 (e. g. element 242 below the top left element 242) electrically coupled to form a second solar array

C. a lead assembly 190 including a first drop line (analogous element 56 of Figs. 2, 3) electrically connected to the first solar array, and a feeder cable (analogous element 52) electrically connected to an inverter 254, the first drop line and the feeder cable electrically connected at a first nexus (the two cables physically meet at a nexus coincident with the cutout 4 in Fig. 3 (¶0025-0032)

D. a second drop line (analogous element 58) electrically connected to the second solar array, the second drop line electrically connected to the feeder cable at a second nexus (overlapping with element 84).

Jonczyk teaches that the feeder cable (described as being formed of primary conductor in ¶0028) may include 8 gauge wire, having a current rating of 30 amps (¶0025, 0027). Therefore a skilled artisan would understand that the feeder cable is a 30 amp feeder cable.

Jonczyk teaches a combiner box 252 between the solar arrays and the inverter. Avrutsky teaches a similar system (element 100 of Fig. 1) with an analogous lead assembly (105), and teaches that such an installation may comprise a combiner box (106) between a plurality of solar arrays and an inverter (103),

or that such a combiner box may alternatively be omitted ("the string bus 105 can be connected to the inverter 105 directly or as a part of a mesh network or combiner boxes or fuse boxes", ¶0028,0029). The omission of an element and its function is obvious if the function of the element is not desired. MPEP §2144.04.11. Therefore it would have been obvious to a person having ordinary skill in the art as of the effective filing date of the claimed invention that the claimed lead assembly could be used in a solar energy installation lacking a combiner box between solar arrays and the inverter, as Avrutsky teaches that a combiner box may be omitted if desired. As such, the system of modified-Jonczyk would not include a combiner box upstream of the inverter.

Jonczyk teaches that the solar panels of the first and second solar arrays are part of an electrical circuit, but does not specifically teach that they are coupled by a first and second wire harness, respectively. Arai teaches that such a circuit of solar panels can be coupled by a wire harness (Fig. 10, ¶0009, 0078-0081). The combination of familiar elements is likely to be obvious when it does no more than yield predictable results. See KSR International Co. v. Teleflex Inc., 550 U.S. 398,415-421, 82 USPQ2d 1385,1395-97 (2007) (see MPEP § 2143, A.). Therefore it would have been obvious as of the effective filing date to electrically couple the first (second) plurality of solar panels by a first (second) wire harness to form the first (second) solar array because such an element is commonly used to form arrays. Further, a person having ordinary skill in the art would appreciate that the first (second) drop line should be electrically connected to the first (second) wire harness in order to provide the electrical connection of the arrays to the inverter of modified-Jonczyk, as Arai teaches that such harnesses are used in that way.

The limitation that the first nexus is secured by a compression lug is interpreted in light of the instant disclosure. Figure 36 of the drawings shows a compression lug, with the form of a cylinder. Figures 35 and 37, and the bottom of page 9 of the specification, describe how the lug fits around the feeder cable and drop line, such that the lug holds the line and cable in contact. Figure 7 also shows an

interaction between a lug, drop line, and feeder cable. A person having ordinary skill in the art would appreciate that an element analogous to element 32 of Fig. 4 of Jonczyk, having the form of a cylinder (compare Figs. 2, and 4, which show that element 32 has a rectangular profile in a top-down view and a circular profile in a cross-sectional view) surrounds the nexus and holds the exposed portions of the line and cable in contact (¶0032). Therefore a person having ordinary skill in the art would appreciate that the first nexus of Jonczyk is secured by a compression lug.

Jonczyk teaches that the compression lug 32 securing the first nexus establishes conductive contact between the feeder cable and first drop line, and that the compression lug and nexus is surrounded by a mold 82 having an inner surface and an outer surface, the inner surface in direct contact with and fully encasing the compression lug (Figs. 3, 4, ¶0031), but does not teach that the mold is an undermold, with the undermold surrounded by an overmold and forming an overmold-undermold interface only at the outer surface.

Ookuma also teaches a mold (element 11 of Fig. 2) within which a nexus is formed between cables and lines (5, C3/L55-61, C4/L17-29), which is an undermold having an outer surface that is surrounded by an overmold (element 1 of Fig. 2, 1/4 of Fig. 5) forming an undermold-overmold interface at the outer surface, so as to establish a double water-proofing around the nexus (C4/L38-43, C4/L60-C5/L10). Therefore it would have been obvious as of the effective filing date of the claimed invention for a person having ordinary skill in the art to form an overmold surrounding the mold of Jonczyk, such that the mold is an undermold having an inner surface and outer surface, and to further form an overmold surrounding the undermold and forming an undermold-overmold interface only at the outer surface in order to double-waterproof the nexus.

Jonczyk teaches that the lead assembly provides a DC voltage generated by solar arrays producing a “high voltage” (¶0002) to a downstream device which can convert the power to AC voltage (¶0040). Further, Jonczyk teaches that the conventional DC voltage ("final voltage" of ¶0036) of 600 V or

1000 V fed to this downstream device, with voltages higher than 1000 V being contemplated (¶0002, 0036). Further, the wires/conductor used to form the drop lines and feeder cables and other elements such as fuses have voltage ratings of "at least" 600 VDC or 1000 VDC that can be chosen to accommodate the final voltage (¶0025, 0027,0028, 0030). Solon II further teaches that it would have been obvious as of the effective filing date of the claimed invention for a person having ordinary skill in the art to form a lead assembly to carry a "high voltage" of 1500 VDC (¶0030). The use of a known technique to improve similar devices (methods or products) in the same way is likely to be obvious. See *KSR International Co. v. Teleflex Inc.*, 550 U.S. 398, 415-421, USPQ2d 1385, 1395 – 97 (2007) (see MPEP § 2143, C.).

Therefore it would have been obvious as of the effective filing date of the claimed invention for a person having ordinary skill in the art to vary the voltage rating to at least as high as 1500 VDC to accommodate the ultimate electrical output of the system. A range can be disclosed in multiple prior art references instead of in a single prior art reference depending on the specific facts of the case. Iron Grip Barbell Co., Inc. v. USA Sports, Inc., 392 F.3d 1317, 1322, 73 USPQ2d 1225, 1228 (Fed. Cir. 2004). MPEP §2144.05.I.

As noted above, the limitation that the lead assembly is suitable for utility-scale installations renders the claim indefinite, and cannot be clearly construed from the disclosure. The combination of references teaches a lead assembly with the claimed limitations, and therefore it is expected that it is suitable for utility-scale installations. Further, Jonczyk teaches that the lead assembly of that invention may supply a power grid (¶0002).

Per claim 9, modified-Jonczyk teaches the limitations of claim 6. Jonczyk teaches that the lead assembly 190 includes an end piece (analogous element 74 of Fig.2, ¶0030).

Per claim 10, modified-Jonczyk teaches the limitations of claim 6. Jonczyk teaches that the first drop line terminates in a drop line connector (analogous element 66 of Fig. 2, ¶0028).

Per claim 11, modified-Jonczyk teaches the limitations of claim 6. Jonczyk teaches that the feeder cable terminates in a feeder cable connector (analogous element 162 in Fig. 7, ¶0034).

Per claim 12, modified-Jonczyk teaches the limitations of claim 6. Jonczyk teaches that the first drop line (described as being formed of secondary conductor in ¶0028) may be include 10 gauge or 12 gauge wire (¶0025). This is interpreted to be within the range "18 to 4 gauge wire". In the case where the claimed ranges "overlap or lie inside ranges disclosed by the prior art" a prima facie case of obviousness exists. In re Wertheim, 541 F.2d 257,191 USPQ 90 (CCPA 1976); In re Woodruff, 919 F.2d 1575,16 USPQ2d 1934 (Fed. Cir. 1990). MPEP §2144.05.

Per claim 14, modified-Jonczyk teaches the limitations of claim 6. Jonczyk teaches that the compression lug 32 surrounds the first nexus (see previously cited passages. Figs., and reasoning).

Claim 13 is/are rejected under 35 U.S.C. 103 as being unpatentable over Jonczyk, and further in view of Avrutsky, Ookuma, Solon II, and Arai, and further in view of US PGPub 2013/0269746 to Ramsey (of record). Supporting information is provided by US PGPub 2009/0300909 to Kummer, US PGPub 2011/0174521 to Hernandez (both of record), and "Wire Gauges - Current Ratings".

Regarding claim 13, modified-Jonczyk teaches the limitations of claim 6. The limitation that the feeder cable includes 9 gauge to 1000MCM wire is interpreted according to ¶0023 of Kummer and Table 1 of Hernandez, which teaches that a 6 gauge wire has a diameter of 4.53 mm (at a particular temperature), and that 1000 MCM wire has diameter of 28.39 mm. Jonczyk teaches that the feeder cable (described as being formed of primary conductor in H0028) may include 8 gauge wire (H0025). "Wire Gauges- Current Ratings" is provided to show that a skilled artisan would understand that wires with such diameters would be rated at 30 amps (see Table).

Ramsey, however, teaches that a gauge of wire can be varied according to the current being carried on the wire (¶0005, 0008,0009, 0025). Therefore it would have been obvious to vary the size of the wire that forms the feeder cable according to the current being carried on the wire. The court has held that absent evidence of criticality or unexpected results, optimization of a result effective variable will not support the patentability of subject matter encompassed by the prior art. "[W]here the general conditions of a claim are disclosed in the prior art, it is not inventive to discover the optimum or workable ranges by routine experimentation." See In re Alter, 220 F.2d 454, 456,105 USPQ 233, 235 (CCPA 1955). See also MPEP §2144.05.

Response to Arguments

Applicant's arguments with respect to claims 1-3, 5, 6, and 9-14 have been considered but are moot because the arguments do not apply the current grounds of rejection. Although some of the references relied upon in the rejections above were previously made of record, the reasoning is new. Regarding the assertion in the Remarks that a "being contemplated" implies that a voltage rating of 1500 VDC is not enabled by the disclosure, the suggestion made by Solon II that solar power systems may reach voltages of 1500 VDC is sufficient to motivate a skilled artisan to achieve such a voltage rating. The strongest rationale for combining references is a recognition, expressly or impliedly in the prior art or drawn from a convincing line of reasoning based on established scientific principles or legal precedent, that some advantage or expected beneficial result would have been produced by their combination. In re Sernaker, 702 F.2d 989, 994-95, 217 USPQ 1, 5-6 (Fed. Cir. 1983). MPEP §2144.II.

Conclusion

Any inquiry concerning this communication or earlier communications from the examiner should be directed to ERIC R SMITH whose telephone number is (571)270-7186. The examiner can normally be reached on M-F, 8:30am-5:30pm MST.

Examiner interviews are available via telephone, in-person, and video conferencing using a USPTO supplied web-based collaboration tool. To schedule an interview, applicant is encouraged to use the USPTO Automated Interview Request (AIR) at http://www.uspto.gov/interviewpractice.

If attempts to reach the examiner by telephone are unsuccessful, the examiner's supervisor, Jeffrey Barton can be reached on (571) 272-1307. The fax phone number for the organization where this application or proceeding is assigned is 571-273-8300.

Information regarding the status of an application may be obtained from the Patent Application Information Retrieval (PAIR) system. Status information for published applications may be obtained from either Private PAIR or Public PAIR. Status information for unpublished applications is available through Private PAIR only. For more information about the PAIR system, see https://ppair-my.uspto.gov/pair/PrivatePair. Should you have questions on access to the Private PAIR system, contact the Electronic Business Center (EBC) at 866-217-9197 (toll-free). If you would like assistance from a USPTO Customer Service Representative or access to the automated information system, call 800-786-9199 (IN USA OR CANADA) or 571-272-1000.

ERIC R. SMITH
Primary Examiner
Art Unit 1726

/ERIC R SMITH/
Primary Examiner, Art Unit 1726

Notice of References Cited	Application/Control No. 14/849,458	Applicant(s)/Patent Under Reexamination Solon, Dean	
	Examiner ERIC R SMITH	Art Unit 1726	Page 1 of 1

U.S. PATENT DOCUMENTS

*		Document Number Country Code-Number-Kind Code	Date MM-YYYY	Name	CPC Classification	US Classification
*	A	US-5316789-A	05-1994	Ookuma; Yasuyuki	H01R4/70	156/185
*	B	US-20110209741-A1	09-2011	Solon; Dean	H01H85/201	136/244
	C					
	D					
	E					
	F					
	G					
	H					
	I					
	J					
	K					
	L					
	M					

FOREIGN PATENT DOCUMENTS

*		Document Number Country Code-Number-Kind Code	Date MM-YYYY	Country	Name	CPC Classification
	N					
	O					
	P					
	Q					
	R					
	S					
	T					

NON-PATENT DOCUMENTS

*		Include as applicable: Author, Title Date, Publisher, Edition or Volume, Pertinent Pages)
	U	
	V	
	W	
	X	

*A copy of this reference is not being furnished with this Office action. (See MPEP § 707.05(a).)
Dates in MM-YYYY format are publication dates. Classifications may be US or foreign.

Voltage, LLC
EX1021-96

Search Notes	Application/Control No.	Applicant(s)/Patent Under Reexamination
	14/849,458	Solon, Dean
	Examiner	**Art Unit**
	ERIC R SMITH	1726

CPC - Searched*		
Symbol	**Date**	**Examiner**
H01L31/0422,0424,0482,0484,05	1/16/2014	ERS
E04D3/40	1/17/2014	ERS
H01L31/02013,02008,02021	7/1/2014	ERS
H02S40/00-38	5/23/2014	ERS
H01R4/187,18,70	11/30/2017	ERS
H01R3-13/All	4/17/2020	ERS
H01R11/11	4/17/2020	ERS
H01R4/021,023,5205	4/17/2020	ERS
H01R13/5205	4/17/2020	ers
H01R4/027,10	4/17/2020	ERS
H01R9/0509	4/17/2020	ERS

CPC Combination Sets - Searched*		
Symbol	**Date**	**Examiner**

US Classification - Searched*			
Class	**Subclass**	**Date**	**Examiner**
52	173.3	7/16/2013	ERS
136	243-265	7/16/2013	ERS

* See search history printout included with this form or the SEARCH NOTES box below to determine the scope of the search.

Voltage LLC
EX1021-97

Search Notes	Application/Control No.	Applicant(s)/Patent Under Reexamination
	14/849,458	Solon, Dean
	Examiner	Art Unit
	ERIC R SMITH	1726

Search Notes		
Search Notes	**Date**	**Examiner**
Keyword search in USPC subclasses, CPC subgroups, IPC subgroups (see EAST history for search strategy)	5/23/2017	ERS
Inventor search in DAV	5/24/2017	ERS
Keyword search in CPC subgroups (see EAST history for search strategy)	11/30/2017	ERS
Update inventor search in DAV	11/30/2017	ERS
Consulted Fritz Fleming in AU2836	9/13/2018	ERS
Keyword search in EAST databases (see EAST history for search strategy)	9/14/2018	ERS
Updated inventor search in DAV	9/18/2018	ERS
Updated inventor search in DAV	6/6/2019	ERS
Keyword search in EAST databases (see EAST history for search strategy)	6/6/2019	ERS
Search consult with Examiner James Harvey in AU 2833	4/16/2020	ERS
Keyword search in EAST databases (see EAST history for search strategy)	5/8/2020	ERS
Updated inventor search in DAV	5/8/2020	ERS

Interference Search			
US Class/CPC Symbol	**US Subclass/CPC Group**	**Date**	**Examiner**

EAST Search History

EAST Search History (Prior Art)

Ref #	Hits	Search Query	DBs	Default Operator	Plurals	Time Stamp
S452	688646	h01R$2/$4.cpc.	US-PGPUB; USPAT; USOCR; FPRS; EPO; JPO; DERWENT; IBM_TDB	AND	ON	2020/04/17 15:04
S453	60	S452 and nexus	US-PGPUB; USPAT; USOCR; FPRS; EPO; JPO; DERWENT; IBM_TDB	AND	ON	2020/04/17 15:05
S455	3067	h01r11/11.cpc.	US-PGPUB; USPAT; USOCR; FPRS; EPO; JPO; DERWENT; IBM_TDB	AND	ON	2020/04/17 15:06
S456	1001	h01r4/021.cpc.	US-PGPUB; USPAT; USOCR; FPRS; EPO; JPO; DERWENT; IBM_TDB	AND	ON	2020/04/17 15:06
S457	3118	h01r4/023.cpc.	US-PGPUB; USPAT; USOCR; FPRS; EPO; JPO; DERWENT; IBM_TDB	AND	ON	2020/04/17 15:06
S458	7510	h01r13/5205.cpc.	US-PGPUB; USPAT; USOCR; FPRS; EPO; JPO; DERWENT; IBM_TDB	AND	ON	2020/04/17 15:06
S459	1125	h01r4/027.cpc.	US-PGPUB; USPAT; USOCR; FPRS; EPO; JPO; DERWENT; IBM_TDB	AND	ON	2020/04/17 15:07
S460	1366	h01r4/10.cpc.	US-PGPUB; USPAT; USOCR; FPRS; EPO; JPO; DERWENT; IBM_TDB	AND	ON	2020/04/17 15:07

S461	17034	S454 or S455 or S456 or S457 or S458 or S459 or S460	US-PGPUB; USPAT; USOCR; FPRS; EPO; JPO; DERWENT; IBM_TDB	AND	ON	2020/04/17 15:16
S462	8003	S461 and (cable or line)	US-PGPUB; USPAT; USOCR; FPRS; EPO; JPO; DERWENT; IBM_TDB	AND	ON	2020/04/17 15:16
S463	8045	S461 and (cable or line or feeder or drop)	US-PGPUB; USPAT; USOCR; FPRS; EPO; JPO; DERWENT; IBM_TDB	AND	ON	2020/04/17 15:16
S464	3560	S463 and (solder$3 or crimp$3 or splic$3 or lug$1 or compress$3)	US-PGPUB; USPAT; USOCR; FPRS; EPO; JPO; DERWENT; IBM_TDB	AND	ON	2020/04/17 15:26
S465	430	h01R9/0509.cpc.	US-PGPUB; USPAT; USOCR; FPRS; EPO; JPO; DERWENT; IBM_TDB	AND	ON	2020/04/17 15:31
S472	430	h01R9/0509.cpc.	US-PGPUB; USPAT; USOCR; FPRS; EPO; JPO; DERWENT; IBM_TDB	AND	ON	2020/04/17 16:08
S473	3067	h01r11/11.cpc.	US-PGPUB; USPAT; USOCR; FPRS; EPO; JPO; DERWENT; IBM_TDB	AND	ON	2020/04/17 16:08
S474	1001	h01r4/021.cpc.	US-PGPUB; USPAT; USOCR; FPRS; EPO; JPO; DERWENT; IBM_TDB	AND	ON	2020/04/17 16:08
S475	3118	h01r4/023.cpc.	US-PGPUB; USPAT; USOCR; FPRS; EPO; JPO; DERWENT; IBM_TDB	AND	ON	2020/04/17 16:08
S476	7510	h01r13/5205.cpc.	US-PGPUB; USPAT; USOCR; FPRS; EPO; JPO; DERWENT; IBM_TDB	AND	ON	2020/04/17 16:08

S477	1125	h01r4/027.cpc.	US-PGPUB; USPAT; USOCR; FPRS; EPO; JPO; DERWENT; IBM_TDB	AND	ON	2020/04/17 16:08
S478	1366	h01r4/10.cpc.	US-PGPUB; USPAT; USOCR; FPRS; EPO; JPO; DERWENT; IBM_TDB	AND	ON	2020/04/17 16:08
S479	17034	S472 or S473 or S474 or S475 or S476 or S477 or S478	US-PGPUB; USPAT; USOCR; FPRS; EPO; JPO; DERWENT; IBM_TDB	AND	ON	2020/04/17 16:08
S480	8045	S479 and (cable or line or feeder or drop)	US-PGPUB; USPAT; USOCR; FPRS; EPO; JPO; DERWENT; IBM_TDB	AND	ON	2020/04/17 16:08
S481	3560	S480 and (solder$3 or crimp$3 or splic$3 or lug$1 or compress$3)	US-PGPUB; USPAT; USOCR; FPRS; EPO; JPO; DERWENT; IBM_TDB	AND	ON	2020/04/17 16:08
S482	806	S481 and ((cable or line) with (intersect$3 or merg$3 or combin$3 or coupl$3))	US-PGPUB; USPAT; USOCR; FPRS; EPO; JPO; DERWENT; IBM_TDB	AND	ON	2020/04/17 16:08
S485	175	S481 and ((cable or line) with (junction$1))	US-PGPUB; USPAT; USOCR; FPRS; EPO; JPO; DERWENT; IBM_TDB	AND	ON	2020/04/17 17:15
S486	102	S485 not S482	US-PGPUB; USPAT; USOCR; FPRS; EPO; JPO; DERWENT; IBM_TDB	AND	ON	2020/04/17 17:15

EAST Search History (Interference)

<This search history is empty>

5/8/2020 9:15:59 PM
C:\Users\esmith3\Documents\EAST\Workspaces\Grid_interconnects_specifics\14849458_lead_assembly.wsp

Smith, Eric (Ryan)

From: Carla L. Gannon <outlook_7C2FFC84D2649322@outlook.com> on behalf of cgannon@carlagannonlaw.com
Sent: Friday, May 8, 2020 12:03 PM
To: Smith, Eric (Ryan)
Subject: Re: Proposed amendments 14/849,458

Thank you for your voicemail Examiner Smith. Reached out again and still no response. You have been so patient and helpful and I appreciate it. I will wait for the Office Action. Have a great weekend. Be safe.

This message may contain information that is confidential, subject to attorney-client privilege, attorney work product privilege, and/or another lawfully recognized privilege. If you received this message in error or through inappropriate means, please immediately notify the sender by replying to this message, then permanently delete this message from all storage media, without forwarding or retaining a copy. Thank you.

From: Smith, Eric (Ryan) <Eric.Smith@USPTO.GOV>
Sent: Wednesday, April 22, 2020 2:46 PM
To: cgannon@carlagannonlaw.com <cgannon@carlagannonlaw.com>
Subject: Proposed amendments 14/849,458

Ms. Gannon,

Please see my proposed amendments to the claims below, which would bring the case into condition for allowance if accepted. I've included amendments to the previously withdrawn claims that will make them able to be rejoined if the case is allowed. If at all possible, please let me know whether you accept or deny the amendments by Friday. If you can't make the decision by Friday, I can wait longer, but I'd prefer you contact me with a timescale so I can accommodate for workflow on my end.

Eric Ryan Smith, Ph. D.
Primary Examiner, AU 1726
(571) 270-7186

1. **(Currently Amended)** A lead assembly for use in a solar energy installation including:

A. A first drop line and a second drop line, said first drop line terminating in a drop line connector;

B. At least one 30 amp feeder cable terminating in a feeder cable connector, said first drop line and said at least one feeder cable electrically coupled at a nexus;

C. A means for securing said nexus, said securing means selected from the group consisting of compression lug, soldering, splicing, crimping, and combinations thereof;

D. An undermold having an inner surface and an outer surface, both surfaces extending in a longitudinal direction of said at least one feeder cable, said inner surface surrounding and fully encasing said securing means, said inner surface comprised of a first aperture concentric with said securing means and said at least one feeder cable, said first aperture extending continuously through said undermold in said longitudinal direction and having a first diameter, said at least one feeder cable continuously extending through said first aperture, and a second aperture concentric with said first drop

line and parallel to said first aperture, said second aperture only partially extending through said undermold in said longitudinal direction, said second aperture having a second diameter smaller than said first diameter, said first drop line extending from said second aperture; and

E. An overmold surrounding said undermold and forming an undermold-overmold interface only at said outer surface, wherein said lead assembly combines power from a plurality of solar arrays and transmits that power to an inverter in a solar energy installation lacking a combiner box between said solar arrays and said inverter, and wherein said lead assembly has a voltage rating of 1500 VDC ~~and is suitable for utility-scale installations~~.

6. **(Currently Amended)** A solar power system comprising:

A. A first plurality of solar panels electrically coupled by a first wire harness to form a first solar array;

B. A second plurality of solar panels electrically coupled by a second wire harness to form a second solar array;

C. A lead assembly including a first drop line electrically connected to said first wire harness, and a 30 amp feeder cable electrically connected to a component selected from the group consisting of a trunk buss jumper, an inverter, a connection unit, a recombiner, and a disconnect unit, said first drop line and said feeder cable electrically connected at a first nexus secured by a compression lug, said compression lug surrounded by an undermold having an inner surface and an outer surface, both surfaces extending in a longitudinal direction of said feeder cable, said inner surface surrounding and fully encasing said compression lug, said inner surface comprised of a first aperture concentric with said securing means and said feeder cable, said first aperture extending continuously through said undermold in said longitudinal direction and having a first diameter, said feeder cable extending continuously through said first aperture, and a second aperture concentric with said first drop line and parallel to said first aperture, said second aperture only partially extending through said undermold in said longitudinal direction, said second aperture having a second diameter smaller than said first diameter, said first drop line extending from said second aperture, with said undermold surrounded by an overmold and forming an undermold-overmold interface only at said outer surface, wherein said lead assembly has a voltage rating of 1500 VDC ~~and is suitable for utility-scale installations~~; and

D. A second drop line electrically connected to said second wire harness, said second drop line electrically connected to said feeder cable at a second nexus, wherein the solar power system doesn't include a combiner box upstream of said component.

17. (**Currently Amended**) A method of constructing a solar power installation including the steps of:

A. Connecting a first plurality of solar panels to a first wire harness to form a first solar array;

B. Connecting said first wire harness to ~~the~~a first drop line of a lead assembly;

C. Connecting a second plurality of solar panels to a second wire harness to form a second solar array;

D. Connecting said second wire harness to ~~the~~a second drop line of said lead assembly; and

E. Electrically coupling said lead assembly to an inverter without electrically coupling to a combiner box;

wherein said lead assembly includes said first drop line electrically connected to said first wire harness, and a 30 amp feeder cable terminating in a feeder cable connector, said first drop line and said feeder cable electrically connected at a first nexus secured by a means for securing said nexus, said securing means selected from the group consisting of compression lug, soldering, splicing, crimping, and combinations thereof, said securing means surrounded by an undermold having an inner surface and an outer surface, both surfaces extending in a longitudinal direction of said feeder cable, said inner surface surrounding and fully encasing said securing means, said inner surface comprised of a first aperture concentric with said securing means and said at least one feeder cable, said first aperture extending continuously through said undermold in said longitudinal direction and having a first diameter, said feeder cable continuously extending through said first aperture, and a second aperture concentric with said first drop line and parallel to said first aperture, said second aperture only partially extending through said undermold in said longitudinal direction, said second

aperture having a second diameter smaller than said first diameter, said first drop line extending from said second aperture, with said undermold surrounded by an overmold and forming an undermold-overmold interface only at said outer surface, wherein said lead assembly has a voltage rating of 1500 VDC.

18. (**Currently Amended**) The method of claim 17 wherein said step of electrically coupling said lead assembly to an inverter includes the steps of electrically coupling said~~a~~ feeder cable to said inverter.

Doc Code: ECOMM.AUTH/ECOMM.WTDW
Doc Description: Internet Communications Authorized/Internet Communications Authorization Withdrawn

PTO/SB/439 (11-15)

AUTHORIZATION FOR INTERNET COMMUNICATIONS IN A PATENT APPLICATION OR REQUEST TO WITHDRAW AUTHORIZATION FOR INTERNET COMMUNICATIONS		
	Application No.	14/849,458
	Filing Date	09/09/2015
	First Named Inventor	Solon, Dean
	Art Unit	1726
	Examiner Name	Eric Smith
	Practitioner Docket No.	SHOALS-59

To: Commissioner for Patents
P.O. Box 1450
Alexandria, VA 22313-1450

I. To authorize permission for Internet Communications.

☑ Recognizing that Internet communications are not secure, I hereby authorize the USPTO to communicate with the undersigned and practitioners in accordance with 37 CFR 1.33 and 37 CFR 1.34 concerning any subject matter of this application via video conferencing, instant messaging, or electronic mail. I understand that a copy of these communications will be made of record in the application file. (MPEP 502.03)

II. To withdraw authorization for Internet Communications.

☐ The authorization given on _____, to the USPTO to communicate with the undersigned and any practitioner in accordance with 37 CFR 1.33 and 37 CFR 1.34 concerning any subject matter of this application via Internet communications such as video conferencing, instant messaging, or electronic mail is hereby withdrawn. I understand that the withdrawal is effective when approved rather than when received.

I am the

☐ applicant.

☑ attorney or agent of record. Registration number 56,358.

☐ attorney or agent acting under 37 CFR 1.34. Registration number _____.

/Carla L Gannon/ — Signature

04/22/2020 — Date

Carla L. Gannon — Typed or printed name

_____ — Telephone Number

NOTE: This form must be signed in accordance with 37 CFR 1.33. See 37 CFR 1.4 for signature requirements and certifications. Juristic entities must be represented by a patent practitioner (see 37 CFR 1.31, which is applicable to any paper filed on or after September 16, 2012, that is presented on behalf of a juristic entity, regardless of application filing date). Submit multiple forms if more than one signature is required, see below*.

☐ * Total of _____ forms are submitted.

Privacy Act Statement

The **Privacy Act of 1974 (P.L. 93-579)** requires that you be given certain information in connection with your submission of the attached form related to a patent application or patent. Accordingly, pursuant to the requirements of the Act, please be advised that: (1) the general authority for the collection of this information is 35 U.S.C. 2(b)(2); (2) furnishing of the information solicited is voluntary; and (3) the principal purpose for which the information is used by the U.S. Patent and Trademark Office is to process and/or examine your submission related to a patent application or patent. If you do not furnish the requested information, the U.S. Patent and Trademark Office may not be able to process and/or examine your submission, which may result in termination of proceedings or abandonment of the application or expiration of the patent.

The information provided by you in this form will be subject to the following routine uses:

1. The information on this form will be treated confidentially to the extent allowed under the Freedom of Information Act (5 U.S.C. 552) and the Privacy Act (5 U.S.C 552a). Records from this system of records may be disclosed to the Department of Justice to determine whether disclosure of these records is required by the Freedom of Information Act.
2. A record from this system of records may be disclosed, as a routine use, in the course of presenting evidence to a court, magistrate, or administrative tribunal, including disclosures to opposing counsel in the course of settlement negotiations.
3. A record in this system of records may be disclosed, as a routine use, to a Member of Congress submitting a request involving an individual, to whom the record pertains, when the individual has requested assistance from the Member with respect to the subject matter of the record.
4. A record in this system of records may be disclosed, as a routine use, to a contractor of the Agency having need for the information in order to perform a contract. Recipients of information shall be required to comply with the requirements of the Privacy Act of 1974, as amended, pursuant to 5 U.S.C. 552a(m).
5. A record related to an International Application filed under the Patent Cooperation Treaty in this system of records may be disclosed, as a routine use, to the International Bureau of the World Intellectual Property Organization, pursuant to the Patent Cooperation Treaty.
6. A record in this system of records may be disclosed, as a routine use, to another federal agency for purposes of National Security review (35 U.S.C. 181) and for review pursuant to the Atomic Energy Act (42 U.S.C. 218(c)).
7. A record from this system of records may be disclosed, as a routine use, to the Administrator, General Services, or his/her designee, during an inspection of records conducted by GSA as part of that agency's responsibility to recommend improvements in records management practices and programs, under authority of 44 U.S.C. 2904 and 2906. Such disclosure shall be made in accordance with the GSA regulations governing inspection of records for this purpose, and any other relevant (*i.e.*, GSA or Commerce) directive. Such disclosure shall not be used to make determinations about individuals.
8. A record from this system of records may be disclosed, as a routine use, to the public after either publication of the application pursuant to 35 U.S.C. 122(b) or issuance of a patent pursuant to 35 U.S.C. 151. Further, a record may be disclosed, subject to the limitations of 37 CFR 1.14, as a routine use, to the public if the record was filed in an application which became abandoned or in which the proceedings were terminated and which application is referenced by either a published application, an application open to public inspection or an issued patent.
9. A record from this system of records may be disclosed, as a routine use, to a Federal, State, or local law enforcement agency, if the USPTO becomes aware of a violation or potential violation of law or regulation.

Electronic Acknowledgement Receipt

EFS ID:	39230022
Application Number:	14849458
International Application Number:	
Confirmation Number:	5067
Title of Invention:	LEAD ASSEMBLY FOR CONNECTING SOLAR PANEL ARRAYS TO INVERTER
First Named Inventor/Applicant Name:	Dean Solon
Customer Number:	57825
Filer:	Carla L. Gannon
Filer Authorized By:	
Attorney Docket Number:	SHOALS-59
Receipt Date:	22-APR-2020
Filing Date:	09-SEP-2015
Time Stamp:	12:44:36
Application Type:	Utility under 35 USC 111(a)

Payment information:

Submitted with Payment	no

File Listing:

Document Number	Document Description	File Name	File Size(Bytes)/ Message Digest	Multi Part /.zip	Pages (if appl.)
1	Internet Communications Authorized	PTO_SB_439_SHOALS-59.pdf	829397 7d49f0d71a2b2a405a4cf619e1c2a0a869350818	no	2

Warnings:

Information:	
Total Files Size (in bytes):	829397

This Acknowledgement Receipt evidences receipt on the noted date by the USPTO of the indicated documents, characterized by the applicant, and including page counts, where applicable. It serves as evidence of receipt similar to a Post Card, as described in MPEP 503.

New Applications Under 35 U.S.C. 111
If a new application is being filed and the application includes the necessary components for a filing date (see 37 CFR 1.53(b)-(d) and MPEP 506), a Filing Receipt (37 CFR 1.54) will be issued in due course and the date shown on this Acknowledgement Receipt will establish the filing date of the application.
National Stage of an International Application under 35 U.S.C. 371
If a timely submission to enter the national stage of an international application is compliant with the conditions of 35 U.S.C. 371 and other applicable requirements a Form PCT/DO/EO/903 indicating acceptance of the application as a national stage submission under 35 U.S.C. 371 will be issued in addition to the Filing Receipt, in due course.
New International Application Filed with the USPTO as a Receiving Office
If a new international application is being filed and the international application includes the necessary components for an international filing date (see PCT Article 11 and MPEP 1810), a Notification of the International Application Number and of the International Filing Date (Form PCT/RO/105) will be issued in due course, subject to prescriptions concerning national security, and the date shown on this Acknowledgement Receipt will establish the international filing date of the application.

PTO/SB/30EFS (02-18)
Approved for use through 11/30/2020. OMB 0651-0031
U.S. Patent and Trademark Office; U.S. DEPARTMENT OF COMMERCE
Under the Paperwork Reduction Act of 1995, no persons are required to respond to a collection of information unless it contains a valid OMB control number.

REQUEST FOR CONTINUED EXAMINATION(RCE)TRANSMITTAL
(Submitted Only via EFS-Web)

Application Number	14849458	Filing Date	2015-09-09	Docket Number (if applicable)	SHOALS-59	Art Unit	1757
First Named Inventor	DEAN SOLON			Examiner Name	ERIC R. SMITH		

This is a Request for Continued Examination (RCE) under 37 CFR 1.114 of the above-identified application.
Request for Continued Examination (RCE) practice under 37 CFR 1.114 does not apply to any utility or plant application filed prior to June 8, 1995, or to any design application. The Instruction Sheet for this form is located at WWW.USPTO.GOV

SUBMISSION REQUIRED UNDER 37 CFR 1.114

Note: If the RCE is proper, any previously filed unentered amendments and amendments enclosed with the RCE will be entered in the order in which they were filed unless applicant instructs otherwise. If applicant does not wish to have any previously filed unentered amendment(s) entered, applicant must request non-entry of such amendment(s).

☐ Previously submitted. If a final Office action is outstanding, any amendments filed after the final Office action may be considered as a submission even if this box is not checked.

- ☐ Consider the arguments in the Appeal Brief or Reply Brief previously filed on _____
- ☐ Other _____

☒ Enclosed

- ☒ Amendment/Reply
- ☐ Information Disclosure Statement (IDS)
- ☐ Affidavit(s)/ Declaration(s)
- ☐ Other _____

MISCELLANEOUS

☐ Suspension of action on the above-identified application is requested under 37 CFR 1.103(c) for a period of months _____
(Period of suspension shall not exceed 3 months; Fee under 37 CFR 1.17(i) required)

☐ Other _____

FEES

The RCE fee under 37 CFR 1.17(e) is required by 37 CFR 1.114 when the RCE is filed.
☒ The Director is hereby authorized to charge any underpayment of fees, or credit any overpayments, to Deposit Account No 506268

SIGNATURE OF APPLICANT, ATTORNEY, OR AGENT REQUIRED

X Patent Practitioner Signature
Applicant Signature

PTO/SB/30EFS (02-18)
Approved for use through 11/30/2020. OMB 0651-0031
U.S. Patent and Trademark Office; U.S. DEPARTMENT OF COMMERCE
Under the Paperwork Reduction Act of 1995, no persons are required to respond to a collection of information unless it contains a valid OMB control number.

Signature of Registered U.S. Patent Practitioner			
Signature	/Carla L. Gannon/	Date (YYYY-MM-DD)	2019-12-11
Name	Carla L. Gannon	Registration Number	56358

This collection of information is required by 37 CFR 1.114. The information is required to obtain or retain a benefit by the public which is to file (and by the USPTO to process) an application. Confidentiality is governed by 35 U.S.C. 122 and 37 CFR 1.11 and 1.14. This collection is estimated to take 12 minutes to complete, including gathering, preparing, and submitting the completed application form to the USPTO. Time will vary depending upon the individual case. Any comments on the amount of time you require to complete this form and/or suggestions for reducing this burden, should be sent to the Chief Information Officer, U.S. Patent and Trademark Office, U.S. Department of Commerce, P.O. Box 1450, Alexandria, VA 22313-1450.

If you need assistance in completing the form, call 1-800-PTO-9199 and select option 2.

Privacy Act Statement

The Privacy Act of 1974 (P.L. 93-579) requires that you be given certain information in connection with your submission of the attached form related to a patent application or patent. Accordingly, pursuant to the requirements of the Act, please be advised that: (1) the general authority for the collection of this information is 35 U.S.C. 2(b)(2); (2) furnishing of the information solicited is voluntary; and (3) the principal purpose for which the information is used by the U.S. Patent and Trademark Office is to process and/or examine your submission related to a patent application or patent. If you do not furnish the requested information, the U.S. Patent and Trademark Office may not be able to process and/or examine your submission, which may result in termination of proceedings or abandonment of the application or expiration of the patent.

The information provided by you in this form will be subject to the following routine uses:

1. The information on this form will be treated confidentially to the extent allowed under the Freedom of Information Act (5 U.S.C. 552) and the Privacy Act (5 U.S.C. 552a). Records from this system of records may be disclosed to the Department of Justice to determine whether the Freedom of Information Act requires disclosure of these records.

2. A record from this system of records may be disclosed, as a routine use, in the course of presenting evidence to a court, magistrate, or administrative tribunal, including disclosures to opposing counsel in the course of settlement negotiations.

3. A record in this system of records may be disclosed, as a routine use, to a Member of Congress submitting a request involving an individual, to whom the record pertains, when the individual has requested assistance from the Member with respect to the subject matter of the record.

4. A record in this system of records may be disclosed, as a routine use, to a contractor of the Agency having need for the information in order to perform a contract. Recipients of information shall be required to comply with the requirements of the Privacy Act of 1974, as amended, pursuant to 5 U.S.C. 552a(m).

5. A record related to an International Application filed under the Patent Cooperation Treaty in this system of records may be disclosed, as a routine use, to the International Bureau of the World Intellectual Property Organization, pursuant to the Patent Cooperation Treaty.

6. A record in this system of records may be disclosed, as a routine use, to another federal agency for purposes of National Security review (35 U.S.C. 181) and for review pursuant to the Atomic Energy Act (42 U.S.C. 218(c)).

7. A record from this system of records may be disclosed, as a routine use, to the Administrator, General Services, or his/her designee, during an inspection of records conducted by GSA as part of that agency's responsibility to recommend improvements in records management practices and programs, under authority of 44 U.S.C. 2904 and 2906. Such disclosure shall be made in accordance with the GSA regulations governing inspection of records for this purpose, and any other relevant (i.e., GSA or Commerce) directive. Such disclosure shall not be used to make determinations about individuals.

8. A record from this system of records may be disclosed, as a routine use, to the public after either publication of the application pursuant to 35 U.S.C. 122(b) or issuance of a patent pursuant to 35 U.S.C. 151. Further, a record may be disclosed, subject to the limitations of 37 CFR 1.14, as a routine use, to the public if the record was filed in an application which became abandoned or in which the proceedings were terminated and which application is referenced by either a published application, an application open to public inspections or an issued patent.

9. A record from this system of records may be disclosed, as a routine use, to a Federal, State, or local law enforcement agency, if the USPTO becomes aware of a violation or potential violation of law or regulation.

1,500-V technologies make utility-scale installations more efficient

2019 Trends: A Solar Power World special feature

By Kelsey Misbrener | June 3, 2019

Utility-scale installers can opt to use either central or string inverter solutions, but one choice usually remains the same for both options: high-voltage.

Sungrow's 1,500-V central inverter. Sungrow

Higher voltage inverters allow installers to condense systems while achieving the same power output. An increase of 500 volts from the typical 1,000 lets contractors use fewer inverters because each one can process more energy. They're especially advantageous in large utility-scale arrays, where cost savings are greatest.

The 2018 "International Technology Roadmap for Photovoltaic" found from 2021 onward, the market for 1,500-V systems will be greater than 50%, and these high-voltage systems will attain a market share of greater than 75% from 2026 onward.

The choice of this voltage is common for utility-scale projects at this point, but after making that decision, developers must choose between 1,500-V central or 1,500-V string inverters.

Voltage, LLC
EX1021-113

and often require a high level of technical knowledge to diagnose and fix problems.

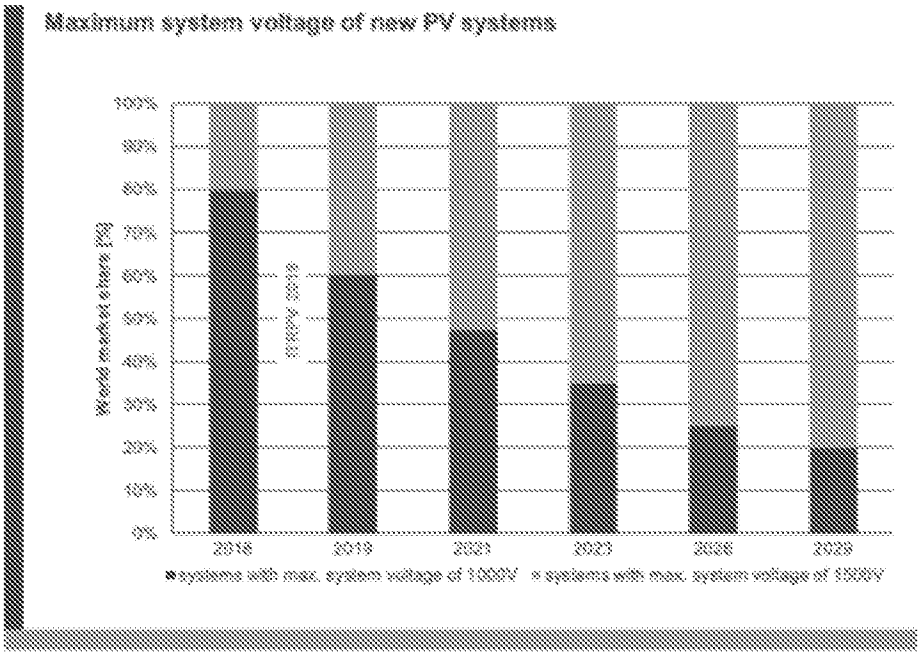

Fig. 39: Trend of maximum system voltage for systems >100kW.

ITRPV

However, when developers are working on larger utility-scale systems, the number of string inverters needed to convert all that power is often prohibitively costly. Central inverters can process much more power per unit, and even more so in the case of high-voltage central solutions. Fewer central inverters means less labor and fewer combiner boxes needed to consolidate wires in these high-voltage installations.

Sungrow offers both 1,500-V solutions. "We don't maintain that one string inverter [at] 1,500 V has an advantage over a central inverter [at] 1,500 V, so we've been offering both at the same level," said Naveed Hasan, director of marketing and strategic initiatives at Sungrow.

Hasan said almost every C&I and utility project for the past year was developed using 1,500-V inverters. From market research, Sungrow expects that number to increase even more in the coming years, with about 95% of projects over 1 MW using 1,500-V inverters by 2023.

There are some risks to using high-voltage inverters in utility-scale arrays. More voltage passing through fewer inverters means more power loss if an inverter fails, so developers need to carefully consider the pros and cons of easier serviceability with string inverters vs. decreased upfront cost associated with central inverters.

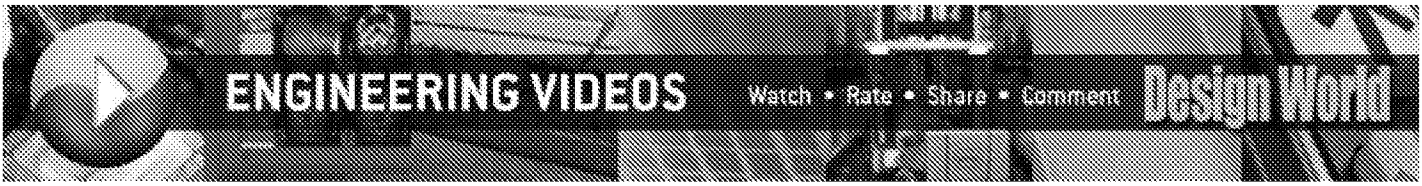

Kelsey Misbrener

Kelsey is senior editor of Solar Power World.

Tell Us What You Think!

Enter your message here

Your Name

Your Email

Your Website

SUBMIT >

Voltage, LLC
EX1021-115

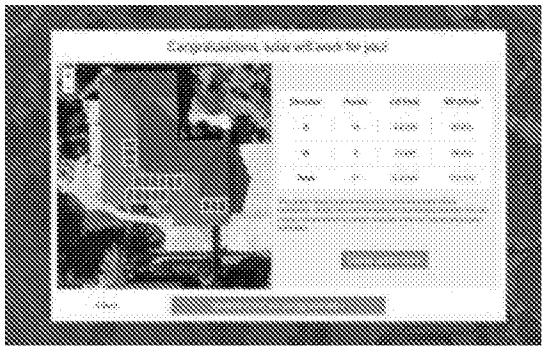

Solar-Estimate.org releases AI-powered panel layout tool for consumers

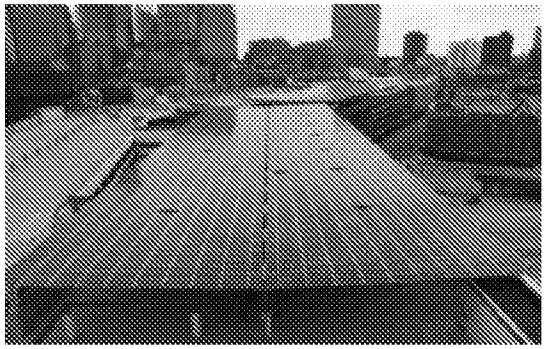

Q&A with solar carport manufacturer Poly-Tex Solar

SMA Energy System Home joins small list of approved storage systems by California Energy Commission

Solar FlexRack fixed-tilt mounts used in 105-MW solar project

Voltage, LLC
EX1021-116

STAY INFORMED WITH GREAT SOLAR POWER CONTENT

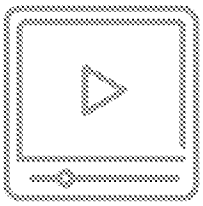

VIDEOS

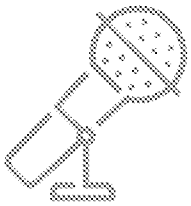

PODCASTS

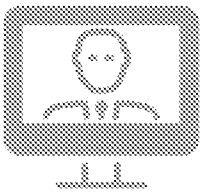

WEBINARS

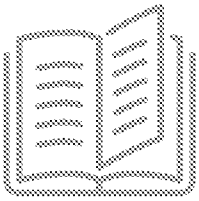

WHITEPAPERS

Voltage, LLC
EX1021-117

SPW DIGITAL EDITIONS

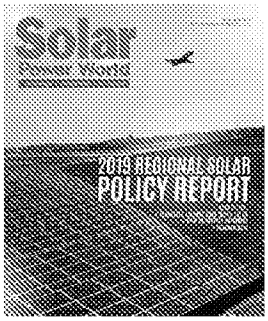

Browse the current issue and archived issues of *Solar Power World* in an easy-to-use, high-quality format. Bookmark, share and interact with the leading solar construction magazine today.

LATEST ISSUE SUBSCRIBE

SOLAR PANEL LOCATIONS

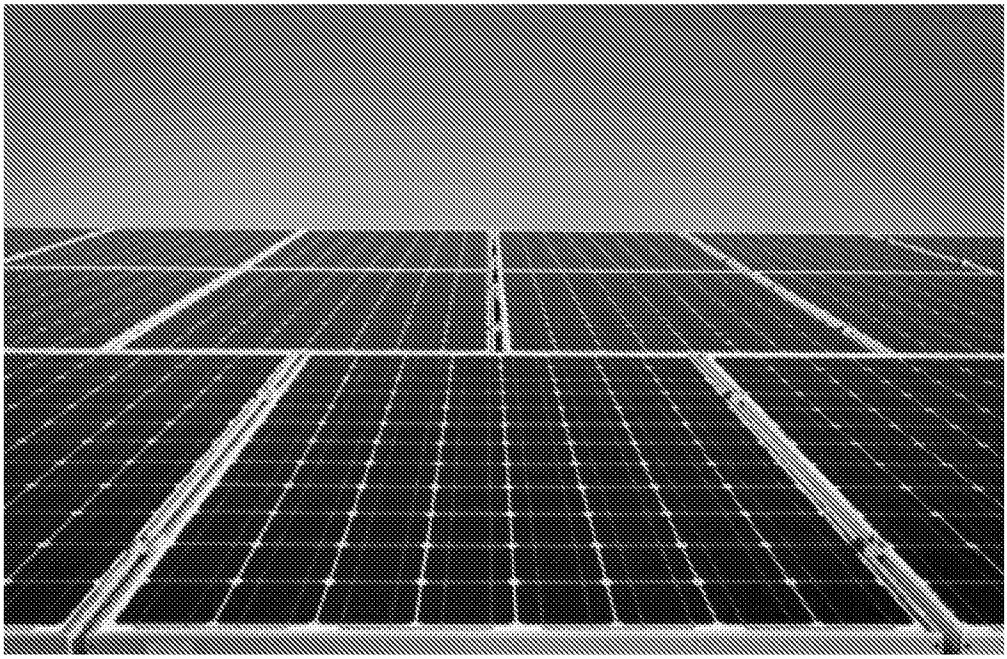

Voltage, LLC
EX1021-118

SEARCH NOW >

POPULAR POSTS

SEE MORE >

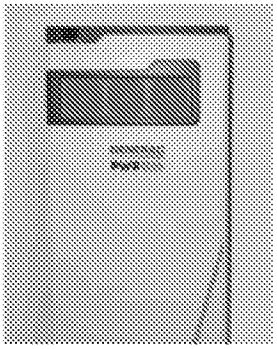

Generac releases its PWRcell integrated energy storage system

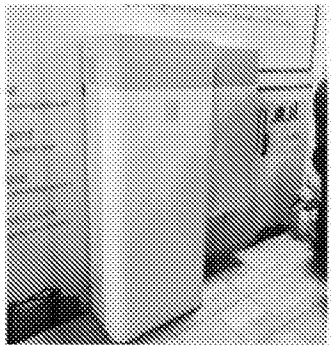

Battery and energy storage highlights at SPI 2019

Voltage, LLC
EX1021-119

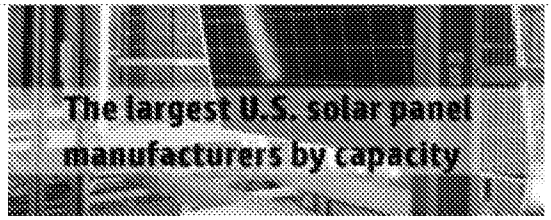

LG to debut its own AC module at SPI with LG-branded microinverter

SPONSORED CONTENT

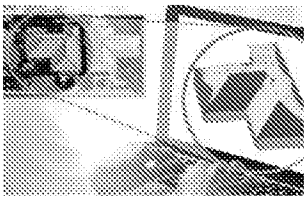

How to Streamline Operations and Deliver High Productivity PV Systems

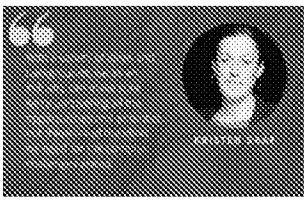

Q&A with WRISE's Kristen Graf: Why Workforce Diversity Is Critical for the Renewables Industry

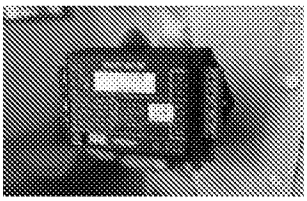

Manage Energy Consumption with a Fronius Smart Meter

Is your customer considering battery storage? Answer these 4 questions for them

Voltage, LLC
EX1021-120

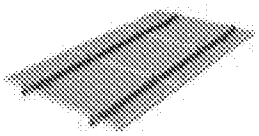

Solar Speaks: How to tackle commercial rooftop solar projects that require longer spans

Tweets by @SolarPowerWorld

Solar Power World
@SolarPowerWorld

.@revisionsolar puts solar on New Hampshire's first LEED Platinum office building
bit.ly/2YK8e3h

ReVision Energy puts solar on New Hampshire's first LEED Platinum office b...
New Hampshire's first LEED Platinum office building has transitioned to solar power...
solarpowerworldonline.com

40s

Solar Power World

Embed View on Twitter

Voltage, LLC
EX1021-129

Like Page Sign Up

1 friend likes this

Solar Power World
on Monday

Travelers Insurance is re-energizing its Global Renewable Energy Practice to take on projects of all shapes and sizes. From offshore and onshore wind farms to solar energy and bio power operations, they have the expertise and commitment to protect the innovators and investors making renewable energy possible.

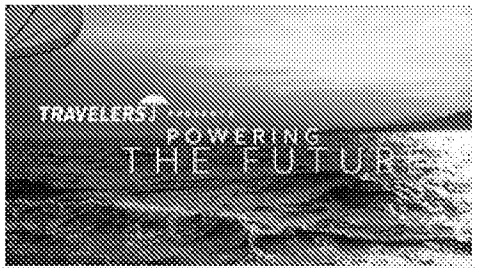

WTWH MEDIA

ABOUT/CONTACT US

ADVERTISING

SUBSCRIBE

WINDPOWER ENGINEERING & DEVELOPMENT

Copyright © 2019 WTWH Media, LLC. All Rights Reserved. **Site Map** | **Privacy Policy** | **RSS**

Voltage, LLC
EX1021-123

Electronic Patent Application Fee Transmittal

Application Number:	14849458
Filing Date:	09-Sep-2015
Title of Invention:	LEAD ASSEMBLY FOR CONNECTING SOLAR PANEL ARRAYS TO INVERTER
First Named Inventor/Applicant Name:	Dean Solon
Filer:	Carla L. Gannon/Donna Braam
Attorney Docket Number:	SHOALS-59

Filed as Small Entity

Filing Fees for Utility under 35 USC 111(a)

Description	Fee Code	Quantity	Amount	Sub-Total in USD($)
Basic Filing:				
Pages:				
Claims:				
Miscellaneous-Filing:				
Petition:				
Patent-Appeals-and-Interference:				
Post-Allowance-and-Post-Issuance:				
Extension-of-Time:				

Description	Fee Code	Quantity	Amount	Sub-Total in USD($)
Extension - 3 months with $0 paid	2253	1	700	700
Miscellaneous:				
RCE- 2ND AND SUBSEQUENT REQUEST	2820	1	950	950
		Total in USD ($)		**1650**

Electronic Acknowledgement Receipt

EFS ID:	37999818
Application Number:	14849458
International Application Number:	
Confirmation Number:	5067
Title of Invention:	LEAD ASSEMBLY FOR CONNECTING SOLAR PANEL ARRAYS TO INVERTER
First Named Inventor/Applicant Name:	Dean Solon
Customer Number:	57825
Filer:	Carla L. Gannon/Donna Braam
Filer Authorized By:	Carla L. Gannon
Attorney Docket Number:	SHOALS-59
Receipt Date:	11-DEC-2019
Filing Date:	09-SEP-2015
Time Stamp:	15:21:45
Application Type:	Utility under 35 USC 111(a)

Payment information:

Submitted with Payment	yes
Payment Type	CARD
Payment was successfully received in RAM	$1650
RAM confirmation Number	E2019BAF23462819
Deposit Account	
Authorized User	

The Director of the USPTO is hereby authorized to charge indicated fees and credit any overpayment as follows:

File Listing:

Document Number	Document Description	File Name	File Size(Bytes)/ Message Digest	Multi Part /.zip	Pages (if appl.)
1	Request for Continued Examination (RCE)	RCEtransmittal_SHOALS-59.pdf	1349937 2dc0be671b15af57b8b5e1970f4be89553d51d9e	no	3
Warnings:					
Information:					
2	Response After Final Action	Response_061119FinalOfficeAction_SHOALS-59.pdf	45324 34fa42634f4684735fac7116434d664faed32dcf	no	9
Warnings:					
Information:					
3	Non Patent Literature	1500-V_technologies_make_utility-scale_installations_more_efficient.pdf	1188653 89ad89e67f7153e7bf9c3f07aeb7b47e5ca49a05	no	11
Warnings:					
Information:					
4	Fee Worksheet (SB06)	fee-info.pdf	32297 a5523bb9dfca6b63159f2fb1539bfa605b7e2c4c	no	2
Warnings:					
Information:					
			Total Files Size (in bytes):	2616211	

This Acknowledgement Receipt evidences receipt on the noted date by the USPTO of the indicated documents, characterized by the applicant, and including page counts, where applicable. It serves as evidence of receipt similar to a Post Card, as described in MPEP 503.

New Applications Under 35 U.S.C. 111
If a new application is being filed and the application includes the necessary components for a filing date (see 37 CFR 1.53(b)-(d) and MPEP 506), a Filing Receipt (37 CFR 1.54) will be issued in due course and the date shown on this Acknowledgement Receipt will establish the filing date of the application.
National Stage of an International Application under 35 U.S.C. 371
If a timely submission to enter the national stage of an international application is compliant with the conditions of 35 U.S.C. 371 and other applicable requirements a Form PCT/DO/EO/903 indicating acceptance of the application as a national stage submission under 35 U.S.C. 371 will be issued in addition to the Filing Receipt, in due course.
New International Application Filed with the USPTO as a Receiving Office
If a new international application is being filed and the international application includes the necessary components for an international filing date (see PCT Article 11 and MPEP 1810), a Notification of the International Application Number and of the International Filing Date (Form PCT/RO/105) will be issued in due course, subject to prescriptions concerning national security, and the date shown on this Acknowledgement Receipt will establish the international filing date of the application.

IN THE UNITED STATES PATENT AND TRADEMARK OFFICE

In re Application of: Dean Solon
Serial No.: 14/849,458 **Examiner:** Eric R. Smith
Filed: 09/09/2015 **Art Unit:** 1757
Confirmation No.: 5067
For: LEAD ASSEMBLY FOR CONNECTING SOLAR PANEL ARRAYS TO INVERTER

Commissioner for Patents
PO Box 1450
Alexandria, VA 22313-1450

Sir:

RESPONSE TO FINAL OFFICE ACTION AND REQUEST FOR CONTINUED EXAMINATION

This paper responds to the Office Action mailed June 11, 2019.

The requisite 3-month extension fee of $700, thereby permitting a Response be filed as late as December 11, 2019, is contemporarily submitted.

A Request for Continued Examination, and the requisite fee of $950 for a small entity's 2nd RCE, is submitted contemporaneously with this Response.

In the event additional fees are required, Applicant requests that this be considered the requisite petition.

The Commissioner is hereby authorized to charge any fees associated with this case to 506268.

Voltage, LLC
EX1021-129

RESPONSE TO FINAL OFFICE ACTION

Amendments to the Claims

The current status of the claims is listed in the "Listing of the Claims" below. This replaces all previous versions of claims.

Listing of the Claims:

1. (**Currently Amended**) A lead assembly for use in a solar energy installation including:

   A. A first drop line and a second drop line, said first drop line terminating in a drop line connector;

   B. At least one 30 amp feeder cable terminating in a feeder cable connector, said first drop line and said at least one feeder cable electrically coupled at a nexus;

   C. A means for securing said nexus, said securing means selected from the group consisting of compression lug, soldering, splicing, crimping, and combinations thereof;

   D. An undermold having an inner surface and an outer surface, said inner surface surrounding and fully encasing said securing means; and

   E. An overmold surrounding said undermold and forming an undermold-overmold interface only at said outer surface, wherein said lead assembly combines power from a plurality of solar arrays and transmits that power to an inverter in a solar energy installation lacking a combiner box between said solar arrays and said inverter, and wherein said lead assembly has a voltage rating of 1500 VDC **and is suitable for utility-scale installations**.

2. (Previously Amended) The lead assembly of claim 1 wherein said first drop line includes a section of exposed wire at said nexus.

3. (Original) The lead assembly of claim 2 wherein said at least one feeder cable includes a section of exposed wire at said nexus.

4. (Previously Cancelled)

5. (Previously Amended) The lead assembly of claim 1 wherein said overmold defines at least one aperture.

Voltage, LLC
EX1021-131

6. (**Currently Amended**) A solar power system comprising:

A. A first plurality of solar panels electrically coupled by a first wire harness to form a first solar array;

B. A second plurality of solar panels electrically coupled by a second wire harness to form a second solar array;

C. A lead assembly including a first drop line electrically connected to said first wire harness, and a 30 amp feeder cable electrically connected to a component selected from the group consisting of a trunk buss jumper, an inverter, a connection unit, a recombiner, and a disconnect unit, said first drop line and said feeder cable electrically connected at a first nexus secured by a compression lug, said compression lug surrounded by an undermold having an inner surface and an outer surface, said inner surface surrounding and fully encasing said compression lug, with said undermold surrounded by an overmold and forming an undermold-overmold interface only at said outer surface, wherein said lead assembly has a voltage rating of 1500 VDC **<u>and is suitable for utility-scale installations</u>**; and

D. A second drop line electrically connected to said second wire harness, said second drop line electrically connected to said feeder cable at a second nexus, wherein the solar power system doesn't include a combiner box upstream of said component.

7. (Previously Cancelled)

8. (Previously Cancelled)

9. (Original) The solar power system of claim 6 wherein said lead assembly includes an end piece.

10. (Original) The solar power system of claim 6 wherein said first drop line terminates in a drop line connector.

11. (Original) The solar power system of claim 6 wherein said feeder cable terminates in a feeder cable connector.

12. (Original) The solar power system of claim 6 wherein said first drop line includes 18 to 4 gauge wire.

13. (Original) The solar power system of claim 6 wherein said feeder cable includes 6 gauge to 1000MCM wire.

14. (Previously Amended) The solar power system of claim 6 wherein said first nexus is surrounded by said compression lug.

15. (Previously Cancelled)

16. (Previously Cancelled)

17. (Previously Withdrawn) A method of constructing a solar power installation including the steps of:

A. Connecting a first plurality of solar panels to a first wire harness to form a first solar array;

B. Connecting said first wire harness to the first drop line of a lead assembly;

C. Connecting a second plurality of solar panels to a second wire harness to form a second solar array;

D. Connecting said second wire harness to the second drop line of said lead assembly; and

E. Electrically coupling said lead assembly to an inverter without electrically coupling to a combiner box.

18. (Previously Withdrawn) The method of claim 17 wherein said step of electrically coupling said lead assembly to an inverter includes the steps of electrically coupling a feeder cable to said inverter.

19. (Previously Added) The lead assembly of claim 1 wherein said undermold is injection molded.

20. (Previously Added) The lead assembly of claim 1 wherein said overmold is injection molded.

Remarks

Applicant gratefully acknowledges the Office Action dated 6/11/19. Upon considering the Office's cited art and remarks, claims 1 and 6 have been amended. Claims 4, 7, 8, and 15 and 16 were previously cancelled, claims 17 and 18 were previously withdrawn, and claims 19 and 20 were previously added. Accordingly, claims **1**-3; 5; **6**; 9-14; 19 and 20 are currently pending, with no claims allowable at this time.

The Office's specific issues are addressed as follows:

I. 35 USC §103(b) Rejection of Claims 1-3, 5, 19 and 20 as obvious in view of Jonczyk, Avrutsky and Yamawaki

Applicant respectfully but vigorously disagrees that Jonczyk's lofty statement about "...voltages higher than 1000 V being contemplated..." rises to the level of teaching 1500 V.

Rather, "being contemplated" indicates the inventor considers 1500 V to be worthy of examination for **future development**. In fact, "being contemplated" clearly suggests that 1500 V is **not enabled** by the disclosed invention.

Moreover, the structure of Jonczyk's device couldn't reasonably lend itself to handling such high voltage. It can be assumed that powering Jonczyk's device with 1500 V would result in **catastrophic failure**. The components simply couldn't handle the load.

In addition, the gap between "higher than 1000 V" and 1500 V is significant. Even if Jonczyk's device could handle >1000 V, and Applicant vigorously asserts that it couldn't, **there is no reasonable interpretation that the device can handle 1500 V**. The magnitude and difference in voltage between "higher than 100 V" and 1500 V is too high. Said another way, because I have a maximum vertical jump of 14 inches it is true that I can jump higher than one foot. However, that doesn't mean I am able to jump 8 feet high.

Applicant points out that a voltage rating of 1500 V is **absolutely critical**. More specifically, the same quantities of components, for example inverter, lead

assemblies, etc. are required in a 1000 V system versus a 1500 system, but the latter yields 50% more power. For this reason 1500 V systems are significantly more efficient than 1000 V systems, and in fact are becoming standard. See attached article.

While Applicant disagrees that Jonczyk teaches 1500 V for the reasons set forth herein, claim 1 has been amended to limit the lead assembly as being suitable for utility-grade installations. Jonczyk doesn't teach this.

While the originally filed application doesn't recite "utility-grade installations" *verbatim*, this is inherent. 1500 V installations, by definition, are utility-grade.

No new matter has been introduced.

II. 35 USC §103(b) Rejection of Claims 6, 9-12, and 14 as obvious in view of Jonczyk, Avrutsky, Arai and Yamawaki

For the reasons set forth in Section I, the rejection of claim 6 is considered improper. In the alternative, the offered amendment overcomes the cited reference.

III. 35 USC §103(b) Rejection of Claim 13 as obvious in view of Jonczyk, Avrutsky, Arai, Yamawaki and Ramsey

This rejection is deemed moot in view of the amendment to claim 6 discussed in Section II above, and claim 13's dependence on claim 6.

Voltage, LLC
EX1021-136

Conclusion

For the reasons set forth herein, Applicant believes all claims are allowable over the art of record.

Examiner Smith is earnestly encouraged to contact Attorney Gannon by telephone or email to resolve any outstanding issues, or to discuss claim amendments which would facilitate allowance.

Respectfully submitted,

/Carla L. Gannon, 56,358/

Carla L. Gannon
Registration No. 56,358
Carla Gannon Law
8903 E. Oak Island Dr.
Suite 9
Oak Island, NC 28465
336-543-3797
cgannon@carlagannonlaw.com

Date: December 11, 2019
File No.: SHOALS-59

Voltage, LLC
EX1021-137

PTO/SB/06 (09-11)
Approved for use through 1/31/2014. OMB 0651-0032
U.S. Patent and Trademark Office; U.S. DEPARTMENT OF COMMERCE
Under the Paperwork Reduction Act of 1995, no persons are required to respond to a collection of information unless it displays a valid OMB control number.

PATENT APPLICATION FEE DETERMINATION RECORD Substitute for Form PTO-875	Application or Docket Number 14/849,458	Filing Date 09/09/2015	☐ To be Mailed

ENTITY: ☐ LARGE ☑ SMALL ☐ MICRO

APPLICATION AS FILED - PART I

FOR	(Column 1) NUMBER FILED	(Column 2) NUMBER EXTRA		RATE ($)	FEE ($)
☐ BASIC FEE (37 CFR 1.16(a), (b), or (c))	N/A	N/A		N/A	
☐ SEARCH FEE (37 CFR 1.16(k), (i), or (m))	N/A	N/A		N/A	
☐ EXAMINATION FEE (37 CFR 1.16(o), (p), or (q))	N/A	N/A		N/A	
TOTAL CLAIMS (37 CFR 1.16(i))	minus 20 =	*		x $40 =	
INDEPENDENT CLAIMS (37 CFR 1.16(h))	minus 3 =	*		x $210 =	
☐ APPLICATION SIZE FEE (37 CFR 1.16(s))	If the specification and drawings exceed 100 sheets of paper, the application size fee due is $310 ($155 for small entity) for each additional 50 sheets or fraction thereof. See 35 U.S.C. 41(a)(1)(G) and 37 CFR 1.16(s).				
☐ MULTIPLE DEPENDENT CLAIM PRESENT (37 CFR 1.16(j))					
* If the difference in column 1 is less than zero, enter "0" in column 2.				TOTAL	

APPLICATION AS AMENDED - PART II

AMENDMENT	12/11/2019	(Column 1) CLAIMS REMAINING AFTER AMENDMENT		(Column 2) HIGHEST NUMBER PREVIOUSLY PAID FOR	(Column 3) PRESENT EXTRA		RATE ($)	ADDITIONAL FEE ($)
	Total (37 CFR 1.16(i))	* 15	Minus	** 20	= 0		x $50 =	0
	Independent (37 CFR 1.16(h))	* 3	Minus	*** 3	= 0		x $230 =	0
	☐ Application Size Fee (37 CFR 1.16(s))							
	☐ FIRST PRESENTATION OF MULTIPLE DEPENDENT CLAIM (37 CFR 1.16(j))							
							TOTAL ADD'L FEE	0

AMENDMENT		(Column 1) CLAIMS REMAINING AFTER AMENDMENT		(Column 2) HIGHEST NUMBER PREVIOUSLY PAID FOR	(Column 3) PRESENT EXTRA		RATE ($)	ADDITIONAL FEE ($)
	Total (37 CFR 1.16(i))	*	Minus	**	=		x $0 =	
	Independent (37 CFR 1.16(h))	*	Minus	***	=		x $0 =	
	☐ Application Size Fee (37 CFR 1.16(s))							
	☐ FIRST PRESENTATION OF MULTIPLE DEPENDENT CLAIM (37 CFR 1.16(j))							
							TOTAL ADD'L FEE	

* If the entry in column 1 is less than the entry in column 2, write "0" in column 3.	SLIE
** If the "Highest Number Previously Paid For" IN THIS SPACE is less than 20, enter "20".	/ALA H HUNTER/
*** If the "Highest Number Previously Paid For" IN THIS SPACE is less than 3, enter "3".	
The "Highest Number Previously Paid For" (Total or Independent) is the highest number found in the appropriate box in column 1.	

This collection of information is required by 37 CFR 1.16. The information is required to obtain or retain a benefit by the public which is to file (and by the USPTO to process) an application. Confidentiality is governed by 35 U.S.C. 122 and 37 CFR 1.14. This collection is estimated to take 12 minutes to complete, including gathering, preparing, and submitting the completed application form to the USPTO. Time will vary depending upon the individual case. Any comments on the amount of time you require to complete this form and/or suggestions for reducing this burden, should be sent to the Chief Information Officer, U.S. Patent and Trademark Office, U.S. Department of Commerce, P.O. Box 1450, Alexandria, VA 22313-1450. DO NOT SEND FEES OR COMPLETED FORMS TO THIS ADDRESS. **SEND TO: Commissioner for Patents, P.O. Box 1450, Alexandria, VA 22313-1450.**

If you need assistance in completing the form, call 1-800-PTO-9199 and select option 2.

UNITED STATES PATENT AND TRADEMARK OFFICE

UNITED STATES DEPARTMENT OF COMMERCE
United States Patent and Trademark Office
Address: COMMISSIONER FOR PATENTS
P.O. Box 1450
Alexandria, Virginia 22313-1450
www.uspto.gov

APPLICATION NO.	FILING DATE	FIRST NAMED INVENTOR	ATTORNEY DOCKET NO.	CONFIRMATION NO.
14/849,458	09/09/2015	Dean Solon	SHOALS-59	5067

57825 7590 06/11/2019
CARLA GANNON LAW
Carla L. Gannon, Esq.
8903 E. Oak Island Dr.
Suite 9
Oak Island, NC 28465

EXAMINER
SMITH, ERIC R

ART UNIT	PAPER NUMBER
1726	

NOTIFICATION DATE	DELIVERY MODE
06/11/2019	ELECTRONIC

Please find below and/or attached an Office communication concerning this application or proceeding.

The time period for reply, if any, is set in the attached communication.

Notice of the Office communication was sent electronically on above-indicated "Notification Date" to the following e-mail address(es):

carlagannon@yahoo.com
cgannon@carlagannonlaw.com
docketing@carlagannonlaw.com

Voltage, LLC
EX1021-139

Office Action Summary	Application No. 14/849,458	Applicant(s) Solon, Dean	
	Examiner ERIC R SMITH	Art Unit 1726	AIA (FITF) Status Yes

-- The MAILING DATE of this communication appears on the cover sheet with the correspondence address --

Period for Reply

A SHORTENED STATUTORY PERIOD FOR REPLY IS SET TO EXPIRE 3 MONTHS FROM THE MAILING DATE OF THIS COMMUNICATION.

- Extensions of time may be available under the provisions of 37 CFR 1.136(a). In no event, however, may a reply be timely filed after SIX (6) MONTHS from the mailing date of this communication.
- If NO period for reply is specified above, the maximum statutory period will apply and will expire SIX (6) MONTHS from the mailing date of this communication.
- Failure to reply within the set or extended period for reply will, by statute, cause the application to become ABANDONED (35 U.S.C. § 133). Any reply received by the Office later than three months after the mailing date of this communication, even if timely filed, may reduce any earned patent term adjustment. See 37 CFR 1.704(b).

Status

1)☑ Responsive to communication(s) filed on 3/25/2019.

☐ A declaration(s)/affidavit(s) under **37 CFR 1.130(b)** was/were filed on _____.

2a)☑ This action is **FINAL.** 2b) ☐ This action is non-final.

3)☐ An election was made by the applicant in response to a restriction requirement set forth during the interview on _____; the restriction requirement and election have been incorporated into this action.

4)☐ Since this application is in condition for allowance except for formal matters, prosecution as to the merits is closed in accordance with the practice under *Ex parte Quayle*, 1935 C.D. 11, 453 O.G. 213.

Disposition of Claims*

5) ☑ Claim(s) 1-3,5-6,9-14 and 17-20 is/are pending in the application.

5a) Of the above claim(s) 17-18 is/are withdrawn from consideration.

6) ☐ Claim(s) _____ is/are allowed.

7) ☑ Claim(s) 1-3,5-6,9-14 and 19-20 is/are rejected.

8) ☐ Claim(s) _____ is/are objected to.

9) ☐ Claim(s) _____ are subject to restriction and/or election requirement

* If any claims have been determined allowable, you may be eligible to benefit from the **Patent Prosecution Highway** program at a participating intellectual property office for the corresponding application. For more information, please see http://www.uspto.gov/patents/init_events/pph/index.jsp or send an inquiry to **PPHfeedback@uspto.gov.**

Application Papers

10)☐ The specification is objected to by the Examiner.

11)☐ The drawing(s) filed on _____ is/are: a)☐ accepted or b)☐ objected to by the Examiner.

Applicant may not request that any objection to the drawing(s) be held in abeyance. See 37 CFR 1.85(a).

Replacement drawing sheet(s) including the correction is required if the drawing(s) is objected to. See 37 CFR 1.121(d).

Priority under 35 U.S.C. § 119

12)☐ Acknowledgment is made of a claim for foreign priority under 35 U.S.C. § 119(a)-(d) or (f).

Certified copies:

a)☐ All b)☐ Some** c)☐ None of the:

1.☐ Certified copies of the priority documents have been received.

2.☐ Certified copies of the priority documents have been received in Application No. _____.

3.☐ Copies of the certified copies of the priority documents have been received in this National Stage application from the International Bureau (PCT Rule 17.2(a)).

** See the attached detailed Office action for a list of the certified copies not received.

Attachment(s)

1) ☑ Notice of References Cited (PTO-892)

2) ☐ Information Disclosure Statement(s) (PTO/SB/08a and/or PTO/SB/08b) Paper No(s)/Mail Date _____.

3) ☐ Interview Summary (PTO-413) Paper No(s)/Mail Date _____.

4) ☐ Other: _____.

Voltage, LLC
EX1021-140

The present application, filed on or after March 16, 2013, is being examined under the first inventor to file provisions of the AIA.

DETAILED ACTION

Priority

Applicant's claim for the benefit of a prior-filed application under 35 U.S.C. 119(e) or under 35 U.S.C. 120, 121, 365(c), or 386(c) is acknowledged. Applicant has not complied with one or more conditions for receiving the benefit of an earlier filing date under 35 U.S.C. 119(e) as follows:

The later-filed application must be an application for a patent for an invention which is also disclosed in the prior application (the parent or original nonprovisional application or provisional application). The disclosure of the invention in the parent application and in the later-filed application must be sufficient to comply with the requirements of 35 U.S.C. 112(a) or the first paragraph of pre-AIA 35 U.S.C. 112, except for the best mode requirement. See *Transco Products, Inc. v. Performance Contracting, Inc.*, 38 F.3d 551, 32 USPQ2d 1077 (Fed. Cir. 1994).

The disclosure of the prior-filed application, Application No. 62/047,773, fails to provide adequate support or enablement in the manner provided by 35 U.S.C. 112(a) or pre-AIA 35 U.S.C. 112, first paragraph for one or more claims of this application. Instant claims 1-3, 5, 6, 9-14 recite limitations which lack support in the provisional application, such as, the limitation that feeder cable is rated at 30 amps and that the lead assembly has a voltage rating of 1500 VDC. The effective filing date of the claims is therefore 9/9/2015.

Response to Amendment

The amendment filed 3/25/2019 does not place the application in condition for allowance.

The previous rejections over 35 U.S.C. 112(a) and 112(b) are withdrawn due to Applicant's amendment.

The previous art rejections are withdrawn due to Applicant's amendment.

New rejections follow.

Claim Interpretation

The examiner notes that claim 1 recites the phrase "a means for securing said nexus". In some circumstances, use of the word "means" (or "step for") in a claim with functional language creates a rebuttable presumption that the claim element is to be treated in accordance with 35 U.S.C. 112(f) (pre-AIA 35 U.S.C. 112, sixth paragraph). The presumption that 35 U.S.C. 112(f) (pre-AIA 35 U.S.C. 112, sixth paragraph) is invoked is rebutted when the function is recited with sufficient structure, material, or acts within the claim itself to entirely perform the recited function. The phrase is immediately followed by a Markush group of potential structural elements or product-by-process limitations which would fulfill such means. Therefore the phrase is not interpreted to be an invocation of 35 U.S.C. 112(f) (pre-AIA 35 U.S.C. 112, sixth paragraph), as the Markush group recites sufficient structure, materials or acts to perform the recited function. Further, the examiner notes that the discussion of such means at the bottom of page 9 of the instant specification is no narrower in scope than the Markush group. For more information, see MPEP § 2173 *et seq.* and *Supplementary Examination Guidelines for Determining Compliance With 35 U.S.C. 112 and for Treatment of Related Issues in Patent Applications*, 76 FR 7162, 7167 (Feb. 9, 2011).

Claims 1 and 6 recite that the lead assembly has a voltage rating of a particular value. The definition of "voltage rating" is "the maximum sustained voltage that can be safely applied to an electric device without risking the possibility of electric breakdown. Also known as working voltage."

Claim Rejections - 35 USC § 103

The text of those sections of Title 35, U.S. Code not included in this action can be found in a prior Office action.

Claims 1-3, 5, 19, and 20 is/are rejected under 35 U.S.C. 103 as being unpatentable over US PGPub 2010/0139733 to Jonczyk (of record), and further in view of US PGPub 2012/0217973 to Avrutsky (of record), and US Patent 6,268,559 to Yamawaki (of record).

Regarding claim 1-3, 5, 19, and 20, Jonczyk teaches a lead assembly including

A. a first drop line 56 and a second drop line 58, the first drop line terminating in a drop line connector 66 (Figs. 2, 3, ¶0025, 0026, 0029, 0030)

B. at least one feeder cable (analogous element 52) terminating in a feeder cable connector 74, the first drop line 56 and the at least one feeder cable electrically coupled at a nexus (the two cables physically meet at a nexus coincident with the cutout 4 in Fig. 3, ¶0027, 0031, 0032)

C. a means for securing the nexus, the securing means being crimping (element 32 is a crimp barrel, Fig. 4)

D. a mold 82 having an inner surface and an outer surface, the inner surface surrounding and fully encasing the securing means 32.

Jonczyk teaches that the feeder cable (described as being formed of primary conductor in ¶0028) may be include 8 gauge wire, having a current rating of 30 amps (¶0025, 0027). Therefore a skilled artisan would understand that the feeder cable is a 30 amp feeder cable.

Jonczyk does not teach that the mold 82 is an undermold, with the undermold surrounded by an overmold and forming an overmold-undermold interface only at the outer surface. Yamawaki also teaches a mold (element 33e of Figs. 9) within which a nexus is formed between cables and lines (31), which is an undermold having an outer surface (partially exposed in Fig. 9B) is surrounded by an overmold (33f), forming an undermold-overmold interface at the outer surface (Fig. 9B shows that the

lower edge portion of 33f extending in the thickness direction of that element exposed by the cutaway precisely intersects with the edge of the exposed face of 33e, thus showing that an outer surface of the undermold forms an interface with the overmold), so that the overmold may improve water resistance of the junction between cables and lines (C10/L17-24, C10/L33-49, C3/L6-18). Therefore it would have been obvious as of the effective filing date of the claimed invention for a person having ordinary skill in the art to form an overmold over the undermold of Jonczyk, so that the undermold is surrounded by the overmold and forms an undermold-overmold interface only at the outer surface in order to improve water resistance of the connection between the first drop line and feeder cable.

Jonczyk teaches that the lead assembly provides a DC voltage to a downstream device which can convert the power to AC voltage (¶0040). Further, Jonczyk teaches that the conventional DC voltage ("final voltage" of ¶0036) of 600 V or 1000 V fed to this downstream device, with voltages higher than 1000 V being contemplated (¶0002, 0036). Further, the wires/conductor used to form the drop lines and feeder cables and other elements such as fuses have voltage ratings of "at least" 600 VDC or 1000 VDC that can be chosen to accommodate the final voltage (¶0025, 0027, 0028, 0030). Therefore it would have been obvious as of the effective filing date of the claimed invention for a person having ordinary skill in the art to vary the voltage rating of the lead assembly according to the ultimate electrical requirements of the system.

The court has held that absent evidence of criticality or unexpected results, optimization of a result effective variable will not support the patentability of subject matter encompassed by the prior art. "[W]here the general conditions of a claim are disclosed in the prior art, it is not inventive to discover the optimum or workable ranges by routine experimentation." See *In re Aller,* 220 F.2d 454, 456, 105 USPQ 233, 235 (CCPA 1955). See also MPEP §2144.05.

The claim is drawn to a lead assembly. The limitations of the preamble that the lead assembly is for use in a solar energy installation, and that the lead assembly combines power from a plurality of

solar arrays and transmits that power to an inverter in a solar energy installation lacking a combiner box between the solar arrays and the inverter are intended use limitation. Intended use limitations are given weight to the extent that the prior art structure is capable of performing the intended use. See MPEP § 2111.02, 2112.01 and 2114-2115. The examiner interprets the lead assembly of modified-Jonczyk to necessarily be capable of performing those intended uses, as the lead assembly has the recited structure. Where the claimed and prior art products are identical or substantially identical in structure or composition, or are produced by identical or substantially identical processes, a *prima facie* case of either anticipation or obviousness has been established. *In re Best,* 562 F.2d 1252, 1255, 195 USPQ 430, 433 (CCPA 1977). "When the PTO shows a sound basis for believing that the products of the applicant and the prior art are the same, the applicant has the burden of showing that they are not." *In re Spada,* 911 F.2d 705, 709, 15 USPQ2d 1655, 1658 (Fed. Cir. 1990). Further, Jonczyk teaches that such a lead assembly is capable of performing several of those intended uses (Fig. 12, ¶0040).

In the event that the intended use limitations can be shown to define the structure or properties of the claimed assembly, Jonczyk teaches that such a lead assembly is capable of being used in a solar energy installation 240, to combine power from a plurality of solar arrays 242 and transmit the power to an inverter. Avrutsky teaches a similar installation (element 100 of Fig. 1) with an analogous lead assembly (105), and teaches that such an installation may comprise a combiner box (106) between a plurality of solar arrays and an inverter (103), or that such a combiner box may alternatively be omitted ("the string bus 105 can be connected to the inverter 105 directly or as a part of a mesh network or combiner boxes or fuse boxes", ¶0028, 0029). The omission of an element and its function is obvious if the function of the element is not desired. MPEP §2144.04.II. Therefore it would have been obvious to a person having ordinary skill in the art as of the effective filing date of the claimed invention that the claimed lead assembly could be used in a solar energy installation lacking a combiner box between solar arrays and the inverter, as Avrutsky teaches that a combiner box may be omitted if desired.

Per claims 2 and 3, modified-Jonczyk teaches the limitations of claim 1. Jonczyk teaches that the first drop line 56 and the at least one feeder cable 52 each include a section of exposed wire at the nexus (Fig.4, ¶0032).

Per claim 5, modified-Jonczyk teaches the limitations of claim 1. Yamawaki teaches that the overmold (33f) of that invention defines apertures (at 33a, 33b, 33c) which allow cables and lines access to the nexus within (Figs. 9, C10/L62-C11/L2). Since Yamawaki and Jonczyk share the features of cables and lines which require access to the nexus, a skilled artisan would form the overmold to define at least one aperture in order to allow cables and lines to access the nexus.

Per claims 19 and 20, modified-Jonczyk teaches the limitations of claim 1. The limitations that the undermold and overmold are injection molded are product-by-process limitations. The patentability of a product does not depend on its method of production. If the product in the product-by-process claim is the same as or obvious from a product of the prior art, the claim is unpatentable even though the prior product was made by a different process." *In re Thorpe,* 777 F.2d 695, 698, 227 USPQ 964, 966 (Fed. Cir. 1985). MPEP §2113.I. The combination of references teaches the structure of the claimed undermold and overmold.

Claims 6, 9-12, and 14 is/are rejected under 35 U.S.C. 103 as being unpatentable over Jonczyk, and further in view of Avrutsky, US PGPub 2010/0258157 to Arai (of record), and Yamawaki.

Regarding claim 6, 9-12, and 14, Jonczyk teaches a solar power system comprising

A. A first plurality of solar panels 244 (e. g. top left element 242 in Fig. 12) electrically coupled to form a first solar array (¶0039, 0040)

B. A second plural of solar panels 244 (e. g. element 242 below the top left element 242) electrically coupled to form a second solar array

C. A lead assembly 190 including a first drop line (analogous element 56 of Figs. 2, 3) electrically connected to first solar array, and a feeder cable (analogous element 52) electrically connected to an inverter 254, the first drop line and the feeder cable electrically connected at a first nexus (the two cables physically meet at a nexus coincident with the cutout 4 in Fig. 3, ¶0025-0032)

D. A second drop line (analogous element 58) electrically connected to the second solar array, the second drop line electrically connected to the feeder cable at a second nexus (overlapping with element 84).

Jonczyk teaches that the feeder cable (described as being formed of primary conductor in ¶0028) may be include 8 gauge wire, having a current rating of 30 amps (¶0025, 0027). Therefore a skilled artisan would understand that the feeder cable is a 30 amp feeder cable.

Jonczyk teaches a combiner box 252 between the solar arrays and the inverter. Avrutsky teaches a similar system (element 100 of Fig. 1) with an analogous lead assembly (105), and teaches that such an installation may comprise a combiner box (106) between a plurality of solar arrays and an inverter (103), or that such a combiner box may alternatively be omitted ("the string bus 105 can be connected to the inverter 105 directly or as a part of a mesh network or combiner boxes or fuse boxes", ¶0028, 0029). The omission of an element and its function is obvious if the function of the element is not desired. MPEP §2144.04.II. Therefore it would have been obvious to a person having ordinary skill in the art as of the effective filing date of the claimed invention that the claimed lead assembly could be used in a solar energy installation lacking a combiner box between solar arrays and the inverter, as Avrutsky teaches that a combiner box may be omitted if desired. As such, the system of modified-Jonczyk would not include a combiner box upstream of the inverter.

Jonczyk teaches that the solar panels of the first and second solar arrays are part of an electrical circuit, but does not specifically teach that they are coupled by a first and second wire harness, respectively. Arai teaches that such a circuit of solar panels can be coupled by a wire harness (Fig. 10,

¶0009, 0078-0081). The combination of familiar elements is likely to be obvious when it does no more than yield predictable results. See *KSR International Co. v. Teleflex Inc.*, 550 U.S. 398, 415-421, 82 USPQ2d 1385, 1395 – 97 (2007) (see MPEP § 2143, A.). Therefore it would have been obvious as of the effective filing date to electrically couple the first (second) plurality of solar panels by a first (second) wire harness to form the first (second) solar array because such an element is commonly used to form arrays. Further, a person having ordinary skill in the art would appreciate that the first (second) drop line should be electrically connected to the first (second) wire harness in order to provide the electrical connection of the arrays to the inverter of modified-Jonczyk, as Arai teaches that such harnesses are used in that way.

The limitation that the first nexus is secured by a compression lug is interpreted in light of the instant disclosure. Figure 36 of the drawings shows a compression lug, with the form of a cylinder. Figures 35 and 37, and the bottom of page 9 of the specification, describe how the lug fits around the feeder cable and drop line, such that the lug holds the line and cable in contact. Figure 7 also shows an interaction between a lug, drop line, and feeder cable. A person having ordinary skill in the art would appreciate that an element analogous to element 32 of Fig. 4 of Jonczyk, having the form of a cylinder (compare Figs. 2, and 4, which show that element 32 has a rectangular profile in a top-down view and a circular profile in a cross-sectional view) surrounds the nexus and holds the exposed portions of the line and cable in contact (¶0032). Therefor a person having ordinary skill in the art would appreciate that the first nexus of Jonczyk is secured by a compression lug.

Jonczyk teaches that the compression lug 32 securing the first nexus establishes conductive contact between the feeder cable and first drop line, and that the compression lug and nexus is surrounded by a mold 82 having an inner surface and an outer surface, the inner surface in direct contact with and fully encasing the compression lug (Figs. 3, 4, ¶0031), but does not teach that the mold is an undermold, with the undermold surrounded by an overmold and forming an overmold-undermold

interface only at the outer surface.

Yamawaki also teaches a mold (element 33e of Figs. 9) within which a nexus is formed between cables and lines (31), which is an undermold having an outer surface (partially exposed in Fig. 9B) is surrounded by an overmold (33f), forming an undermold-overmold interface at the outer surface (Fig. 9B shows that the lower edge portion of 33f extending in the thickness direction of that element exposed by the cutaway precisely intersects with the edge of the exposed face of 33e, thus showing that an outer surface of the undermold forms an interface with the overmold), so that the overmold may improve water resistance of the junction between cables and lines (C10/L17-24, C10/L33-49, C13/L6-18). Therefore it would have been obvious as of the effective filing date of the claimed invention for a person having ordinary skill in the art to form an overmold over the undermold of Jonczyk, so that the undermold is surrounded by the overmold and forms an undermold-overmold interface only at the outer surface in order to improve water resistance of the connection between the first drop line and feeder cable.

Jonczyk teaches that the lead assembly provides a DC voltage to a downstream device which can convert the power to AC voltage (¶0040). Further, Jonczyk teaches that the conventional DC voltage ("final voltage" of ¶0036) of 600 V or 1000 V fed to this downstream device, with voltages higher than 1000 V being contemplated (¶0002, 0036). Further, the wires/conductor used to form the drop lines and feeder cables and other elements such as fuses have voltage ratings of "at least" 600 VDC or 1000 VDC that can be chosen to accommodate the final voltage (¶0025, 0027, 0028, 0030). Therefore it would have been obvious as of the effective filing date of the claimed invention for a person having ordinary skill in the art to vary the voltage rating of the lead assembly according to the ultimate electrical requirements of the system.

The court has held that absent evidence of criticality or unexpected results, optimization of a result effective variable will not support the patentability of subject matter encompassed by the prior

art. "[W]here the general conditions of a claim are disclosed in the prior art, it is not inventive to discover the optimum or workable ranges by routine experimentation." See *In re Aller,* 220 F.2d 454, 456, 105 USPQ 233, 235 (CCPA 1955). See also MPEP §2144.05.

Per claim 9, modified-Jonczyk teaches the limitations of claim 6. Jonczyk teaches that the lead assembly 190 includes an end piece (analogous element 74 of Fig.2, ¶0030).

Per claim 10, modified-Jonczyk teaches the limitations of claim 6. Jonczyk teaches that the first drop line terminates in a drop line connector (analogous element 66 of Fig. 2, ¶0028).

Per claim 11, modified-Jonczyk teaches the limitations of claim 6. Jonczyk teaches that the feeder cable terminates in a feeder cable connector (analogous element 162 in Fig. 7, ¶0034).

Per claim 12, modified-Jonczyk teaches the limitations of claim 6. Jonczyk teaches that the first drop line (described as being formed of secondary conductor in ¶0028) may be include 10 gauge or 12 gauge wire (¶0025). This is interpreted to be within the range "18 to 4 gauge wire". In the case where the claimed ranges "overlap or lie inside ranges disclosed by the prior art" a *prima facie* case of obviousness exists. *In re Wertheim,* 541 F.2d 257, 191 USPQ 90 (CCPA 1976); *In re Woodruff,* 919 F.2d 1575, 16 USPQ2d 1934 (Fed. Cir. 1990). MPEP §2144.05.

Per claim 14, modified-Jonczyk teaches the limitations of claim 6. Jonczyk teaches that the compression lug 32 surrounds the first nexus (see previously cited passages, Figs., and reasoning).

Claim 13 is/are rejected under 35 U.S.C. 103 as being unpatentable over Jonczyk, Avrutsky, Arai, and Yamawaki as applied to claim 6 above, and further in view of US PGPub 2013/0269746 to Ramsey (of record). Supporting information is provided by US PGPub 2009/0300909 to Kummer, US PGPub 2011/0174521 to Hernandez (both of record), and "Wire Gauges - Current Ratings"..

Regarding claim 13, modified-Jonczyk teaches the limitations of claim 6. The limitation that the feeder cable includes 6 gauge to 1000MCM wire is interpreted according to ¶0023 of Kummer and Table

1 of Hernandez, which teaches that a 6 gauge wire has a diameter of 4.53 mm (at a particular temperature), and that 1000 MCM wire has diameter of 28.39 mm. Jonczyk teaches that the feeder cable (described as being formed of primary conductor in ¶0028) may include 8 gauge wire (¶0025). "Wire Gauges - Current Ratings" is provided to show that a skilled artisan would understand that wires with such diameters would be rated at 30 amps (see Table).

Ramsey, however, teaches that a gauge of wire can be varied according to the current being carried on the wire (¶0005, 0008, 0009, 0025). Therefore it would have been obvious to vary the size of the wire that forms the feeder cable according to the current being carried on the wire. The court has held that absent evidence of criticality or unexpected results, optimization of a result effective variable will not support the patentability of subject matter encompassed by the prior art. "[W]here the general conditions of a claim are disclosed in the prior art, it is not inventive to discover the optimum or workable ranges by routine experimentation." See *In re Aller,* 220 F.2d 454, 456, 105 USPQ 233, 235 (CCPA 1955). See also MPEP §2144.05.

Response to Arguments

Applicant's arguments with respect to claims 1-3, 5, 6, 9-14, 19, and 20 have been considered but are not found persuasive. The examiner notes that while the references relied upon in the rejections above were previously made of record, the reasoning is new, especially in regards to the limitation regarding the voltage rating of the lead assembly.

Applicant has identified the claimed voltage rating to not be found in the prior art. However, as noted above, it would have been obvious as of the effective filing date of the claimed invention for a person having ordinary skill in the art to vary the voltage rating of the lead assembly according to the ultimate electrical requirements of the system. Applicant has not presented or identified evidence in the original specification which show the criticality of the lead assembly having a voltage rating of 1500 VDC.

Therefore the reasoning of the claimed voltage rating as *prima facie* obvious is proper.

Conclusion

Applicant's amendment necessitated the new ground(s) of rejection presented in this Office action. Accordingly, **THIS ACTION IS MADE FINAL**. See MPEP § 706.07(a). Applicant is reminded of the extension of time policy as set forth in 37 CFR 1.136(a).

A shortened statutory period for reply to this final action is set to expire THREE MONTHS from the mailing date of this action. In the event a first reply is filed within TWO MONTHS of the mailing date of this final action and the advisory action is not mailed until after the end of the THREE-MONTH shortened statutory period, then the shortened statutory period will expire on the date the advisory action is mailed, and any extension fee pursuant to 37 CFR 1.136(a) will be calculated from the mailing date of the advisory action. In no event, however, will the statutory period for reply expire later than SIX MONTHS from the date of this final action.

Any inquiry concerning this communication or earlier communications from the examiner should be directed to ERIC R SMITH whose telephone number is (571)270-7186. The examiner can normally be reached on M-F, 8:30am-5:30pm MST.

Examiner interviews are available via telephone, in-person, and video conferencing using a USPTO supplied web-based collaboration tool. To schedule an interview, applicant is encouraged to use the USPTO Automated Interview Request (AIR) at http://www.uspto.gov/interviewpractice.

If attempts to reach the examiner by telephone are unsuccessful, the examiner's supervisor, Jeffrey Barton can be reached on (571) 272-1307. The fax phone number for the organization where this application or proceeding is assigned is 571-273-8300.

Information regarding the status of an application may be obtained from the Patent Application Information Retrieval (PAIR) system. Status information for published applications may be obtained from either Private PAIR or Public PAIR. Status information for unpublished applications is available through Private PAIR only. For more information about the PAIR system, see http://pair-direct.uspto.gov. Should you have questions on access to the Private PAIR system, contact the Electronic Business Center (EBC) at 866-217-9197 (toll-free). If you would like assistance from a USPTO Customer Service Representative or access to the automated information system, call 800-786-9199 (IN USA OR CANADA) or 571-272-1000.

ERIC R. SMITH
Primary Examiner
Art Unit 1726

/ERIC R SMITH/
Primary Examiner, Art Unit 1726

Notice of References Cited	Application/Control No. 14/849,458	Applicant(s)/Patent Under Reexamination Solon, Dean	
	Examiner ERIC R SMITH	Art Unit 1726	Page 1 of 1

U.S. PATENT DOCUMENTS

*		Document Number Country Code-Number-Kind Code	Date MM-YYYY	Name	CPC Classification	US Classification
	A					
	B					
	C					
	D					
	E					
	F					
	G					
	H					
	I					
	J					
	K					
	L					
	M					

FOREIGN PATENT DOCUMENTS

*		Document Number Country Code-Number-Kind Code	Date MM-YYYY	Country	Name	CPC Classification
	N					
	O					
	P					
	Q					
	R					
	S					
	T					

NON-PATENT DOCUMENTS

*		Include as applicable: Author, Title Date, Publisher, Edition or Volume, Pertinent Pages)
	U	"Wire Gauges - Current Ratings" [retrieved from https://web.archive.org/web/20140715051530/www.engineeringtoolbox.com/wire-gauges-d_419.html on 6/6/2019] (Year: 2015)
	V	
	W	
	X	

*A copy of this reference is not being furnished with this Office action. (See MPEP § 707.05(a).)
Dates in MM-YYYY format are publication dates. Classifications may be US or foreign.

Voltage, LLC
EX1021-154

Search Notes	Application/Control No.	Applicant(s)/Patent Under Reexamination
	14/849,458	Solon, Dean
	Examiner	**Art Unit**
	ERIC R SMITH	1726

CPC - Searched*		
Symbol	**Date**	**Examiner**
H01L31/0422,0424,0482,0484,05	1/16/2014	ERS
E04D3/40	1/17/2014	ERS
H01L31/02013,02008,02021	7/1/2014	ERS
H02S40/00-38	5/23/2014	ERS
H01R4/187,18,70	11/30/2017	ERS

CPC Combination Sets - Searched*		
Symbol	**Date**	**Examiner**

US Classification - Searched*			
Class	**Subclass**	**Date**	**Examiner**
52	173.3	7/16/2013	ERS
136	243-265	7/16/2013	ERS

* See search history printout included with this form or the SEARCH NOTES box below to determine the scope of the search.

Voltage LLC
EX1021-155

Search Notes	Application/Control No.	Applicant(s)/Patent Under Reexamination
	14/849,458	Solon, Dean
	Examiner	**Art Unit**
	ERIC R SMITH	1726

Search Notes		
Search Notes	**Date**	**Examiner**
Keyword search in USPC subclasses, CPC subgroups, IPC subgroups (see EAST history for search strategy)	5/23/2017	ERS
Inventor search in DAV	5/24/2017	ERS
Keyword search in CPC subgroups (see EAST history for search strategy)	11/30/2017	ERS
Update inventor search in DAV	11/30/2017	ERS
Consulted Fritz Fleming in AU2836	9/13/2018	ERS
Keyword search in EAST databases (see EAST history for search strategy)	9/14/2018	ERS
Updated inventor search in DAV	9/18/2018	ERS
Updated inventor search in DAV	6/6/2019	ERS
Keyword search in EAST databases (see EAST history for search strategy)	6/6/2019	ERS

Interference Search			
US Class/CPC Symbol	**US Subclass/CPC Group**	**Date**	**Examiner**

Voltage LLC
EX1021-156

EAST Search History

EAST Search History (Prior Art)

Ref #	Hits	Search Query	DBs	Default Operator	Plurals	Time Stamp
L6	229512	volt$3 near3 rat$3 or working near3 volt$3	US-PGPUB; USPAT	AND	ON	2019/06/06 11:57
L7	37770	l6 and (cabl$3)	US-PGPUB; USPAT	AND	ON	2019/06/06 11:58
L8	12393	l6 and ((cabl$3) with ("a" or amperage$1 or amp$1))	US-PGPUB; USPAT	AND	ON	2019/06/06 12:13
L9	383	l6 and ((cabl$3) with (amperage$1 or amp$1))	US-PGPUB; USPAT	AND	ON	2019/06/06 12:13
L10	72	l9 and (solar or photovoltaic)	US-PGPUB; USPAT	AND	ON	2019/06/06 12:13
L11	1	l2 and (vdc)	US-PGPUB; USPAT	AND	ON	2019/06/06 13:23
L12	1	l2 and (vdc or voltage$1 or volt$1)	US-PGPUB; USPAT	AND	ON	2019/06/06 13:23

EAST Search History (Interference)

< This search history is empty>

6/6/2019 3:02:41 PM
C:\Users\esmith3\Documents\EAST\Workspaces\Grid_interconnects_specifics\14849458_lead_assembly.wsp

PTO/SB/06 (09-11)
Approved for use through 1/31/2014. OMB 0651-0032
U.S. Patent and Trademark Office; U.S. DEPARTMENT OF COMMERCE
Under the Paperwork Reduction Act of 1995, no persons are required to respond to a collection of information unless it displays a valid OMB control number.

PATENT APPLICATION FEE DETERMINATION RECORD Substitute for Form PTO-875	Application or Docket Number 14/849,458	Filing Date 09/09/2015	☐ To be Mailed

ENTITY: ☐ LARGE ☑ SMALL ☐ MICRO

APPLICATION AS FILED - PART I

FOR	(Column 1) NUMBER FILED	(Column 2) NUMBER EXTRA		RATE ($)	FEE ($)
☐ BASIC FEE (37 CFR 1.16(a), (b), or (c))	N/A	N/A		N/A	
☐ SEARCH FEE (37 CFR 1.16(k), (i), or (m))	N/A	N/A		N/A	
☐ EXAMINATION FEE (37 CFR 1.16(o), (p), or (q))	N/A	N/A		N/A	
TOTAL CLAIMS (37 CFR 1.16(i))	minus 20 =	*		x $40 =	
INDEPENDENT CLAIMS (37 CFR 1.16(h))	minus 3 =	*		x $210 =	
☐ APPLICATION SIZE FEE (37 CFR 1.16(s))	If the specification and drawings exceed 100 sheets of paper, the application size fee due is $310 ($155 for small entity) for each additional 50 sheets or fraction thereof. See 35 U.S.C. 41(a)(1)(G) and 37 CFR 1.16(s).				
☐ MULTIPLE DEPENDENT CLAIM PRESENT (37 CFR 1.16(j))					
* If the difference in column 1 is less than zero, enter "0" in column 2.				TOTAL	

APPLICATION AS AMENDED - PART II

AMENDMENT	03/25/2019	(Column 1) CLAIMS REMAINING AFTER AMENDMENT		(Column 2) HIGHEST NUMBER PREVIOUSLY PAID FOR	(Column 3) PRESENT EXTRA		RATE ($)	ADDITIONAL FEE ($)
	Total (37 CFR 1.16(i))	* 15	Minus	** 20	= 0		x $50 =	0
	Independent (37 CFR 1.16(h))	* 3	Minus	*** 3	= 0		x $230 =	0
	☐ Application Size Fee (37 CFR 1.16(s))							
	☐ FIRST PRESENTATION OF MULTIPLE DEPENDENT CLAIM (37 CFR 1.16(j))							
							TOTAL ADD'L FEE	0

AMENDMENT		(Column 1) CLAIMS REMAINING AFTER AMENDMENT		(Column 2) HIGHEST NUMBER PREVIOUSLY PAID FOR	(Column 3) PRESENT EXTRA		RATE ($)	ADDITIONAL FEE ($)
	Total (37 CFR 1.16(i))	*	Minus	**	=		x $0 =	
	Independent (37 CFR 1.16(h))	*	Minus	***	=		x $0 =	
	☐ Application Size Fee (37 CFR 1.16(s))							
	☐ FIRST PRESENTATION OF MULTIPLE DEPENDENT CLAIM (37 CFR 1.16(j))							
							TOTAL ADD'L FEE	

* If the entry in column 1 is less than the entry in column 2, write "0" in column 3.	LIE
** If the "Highest Number Previously Paid For" IN THIS SPACE is less than 20, enter "20".	/VERONICA EVERETTE/
*** If the "Highest Number Previously Paid For" IN THIS SPACE is less than 3, enter "3".	
The "Highest Number Previously Paid For" (Total or Independent) is the highest number found in the appropriate box in column 1.	

This collection of information is required by 37 CFR 1.16. The information is required to obtain or retain a benefit by the public which is to file (and by the USPTO to process) an application. Confidentiality is governed by 35 U.S.C. 122 and 37 CFR 1.14. This collection is estimated to take 12 minutes to complete, including gathering, preparing, and submitting the completed application form to the USPTO. Time will vary depending upon the individual case. Any comments on the amount of time you require to complete this form and/or suggestions for reducing this burden, should be sent to the Chief Information Officer, U.S. Patent and Trademark Office, U.S. Department of Commerce, P.O. Box 1450, Alexandria, VA 22313-1450. DO NOT SEND FEES OR COMPLETED FORMS TO THIS ADDRESS. **SEND TO: Commissioner for Patents, P.O. Box 1450, Alexandria, VA 22313-1450.**

If you need assistance in completing the form, call 1-800-PTO-9199 and select option 2.

Electronic Patent Application Fee Transmittal

Application Number:	14849458
Filing Date:	09-Sep-2015
Title of Invention:	LEAD ASSEMBLY FOR CONNECTING SOLAR PANEL ARRAYS TO INVERTER
First Named Inventor/Applicant Name:	Dean Solon
Filer:	Carla L. Gannon/Donna Braam
Attorney Docket Number:	SHOALS-59

Filed as Small Entity

Filing Fees for **Utility under 35 USC 111(a)**

Description	Fee Code	Quantity	Amount	Sub-Total in USD($)
Basic Filing:				
Pages:				
Claims:				
Miscellaneous-Filing:				
Petition:				
Patent-Appeals-and-Interference:				
Post-Allowance-and-Post-Issuance:				
Extension-of-Time:				

Description	Fee Code	Quantity	Amount	Sub-Total in USD($)
Extension - 3 months with $0 paid	2253	1	700	700
Miscellaneous:				
			Total in USD ($)	**700**

Electronic Acknowledgement Receipt

EFS ID:	35523942
Application Number:	14849458
International Application Number:	
Confirmation Number:	5067
Title of Invention:	LEAD ASSEMBLY FOR CONNECTING SOLAR PANEL ARRAYS TO INVERTER
First Named Inventor/Applicant Name:	Dean Solon
Customer Number:	57825
Filer:	Carla L. Gannon/Donna Braam
Filer Authorized By:	Carla L. Gannon
Attorney Docket Number:	SHOALS-59
Receipt Date:	25-MAR-2019
Filing Date:	09-SEP-2015
Time Stamp:	19:55:06
Application Type:	Utility under 35 USC 111(a)

Payment information:

Submitted with Payment	yes
Payment Type	CARD
Payment was successfully received in RAM	$700
RAM confirmation Number	032619INTEFSW20013900
Deposit Account	
Authorized User	

The Director of the USPTO is hereby authorized to charge indicated fees and credit any overpayment as follows:

File Listing:

Document Number	Document Description	File Name	File Size(Bytes)/ Message Digest	Multi Part /.zip	Pages (if appl.)
1	Amendment/Req. Reconsideration-After Non-Final Reject	Response_092418NonFinalOfficeAction_SHOALS-59.pdf	42746 a7d566b218f4ca73fba5f015652657e12e3284d5	no	9
Warnings:					
Information:					
2	Fee Worksheet (SB06)	fee-info.pdf	30517 e9d0f0d691d16b1d05abf245601ddd6d6e0ef62c	no	2
Warnings:					
Information:					
		Total Files Size (in bytes):	73263		

This Acknowledgement Receipt evidences receipt on the noted date by the USPTO of the indicated documents, characterized by the applicant, and including page counts, where applicable. It serves as evidence of receipt similar to a Post Card, as described in MPEP 503.

<u>New Applications Under 35 U.S.C. 111</u>
If a new application is being filed and the application includes the necessary components for a filing date (see 37 CFR 1.53(b)-(d) and MPEP 506), a Filing Receipt (37 CFR 1.54) will be issued in due course and the date shown on this Acknowledgement Receipt will establish the filing date of the application.
<u>National Stage of an International Application under 35 U.S.C. 371</u>
If a timely submission to enter the national stage of an international application is compliant with the conditions of 35 U.S.C. 371 and other applicable requirements a Form PCT/DO/EO/903 indicating acceptance of the application as a national stage submission under 35 U.S.C. 371 will be issued in addition to the Filing Receipt, in due course.
<u>New International Application Filed with the USPTO as a Receiving Office</u>
If a new international application is being filed and the international application includes the necessary components for an international filing date (see PCT Article 11 and MPEP 1810), a Notification of the International Application Number and of the International Filing Date (Form PCT/RO/105) will be issued in due course, subject to prescriptions concerning national security, and the date shown on this Acknowledgement Receipt will establish the international filing date of the application.

IN THE UNITED STATES PATENT AND TRADEMARK OFFICE

In re Application of: Dean Solon
Serial No.: 14/849,458 **Examiner:** Eric R. Smith
Filed: 09/09/2015 **Art Unit:** 1757
Confirmation No.: 5067
For: LEAD ASSEMBLY FOR CONNECTING SOLAR PANEL ARRAYS TO INVERTER

Commissioner for Patents
PO Box 1450
Alexandria, VA 22313-1450

Sir:

RESPONSE TO NON-FINAL OFFICE ACTION

This paper responds to the Office Action mailed September 24, 2018.

The requisite 3-month extension fee of $700, thereby permitting a Response be filed as late as March 25, 2019, is contemporarily submitted. In the event additional fees are required, Applicant requests that this be considered the requisite petition.

The Commissioner is hereby authorized to charge any fees associated with this case to 506268.

Voltage, LLC
EX1021-163

RESPONSE TO NON-FINAL OFFICE ACTION

Amendments to the Claims

The current status of the claims is listed in the "Listing of the Claims" below. This replaces all previous versions of claims.

Listing of the Claims:

1. (**Currently Amended**) A lead assembly for use in a solar energy installation including:

   A. A first drop line and a second drop line, said first drop line terminating in a drop line connector;

   B. At least one **30 amp** feeder cable terminating in a feeder cable connector, said first drop line and said at least one feeder cable electrically coupled at a nexus;

   C. A means for securing said nexus, said securing means selected from the group consisting of compression lug, soldering, splicing, crimping, and combinations thereof;

   D. An undermold having an inner surface and an outer surface, said inner surface surrounding and fully encasing said securing means; and

   E. An overmold surrounding said undermold and forming an undermold-overmold interface only at said outer surface, wherein said lead assembly combines power from a plurality of solar arrays and transmits that power to an inverter in a solar energy installation lacking a combiner box between said solar arrays and said inverter, and wherein said lead assembly has a voltage rating ~~**selected from the group consisting of 600 VDC, 1000 VDC,**~~ **of** 1500 VDC ~~**and combinations thereof**~~.

2. (Previously Amended) The lead assembly of claim 1 wherein said first

drop line includes a section of exposed wire at said nexus.

3. (Original) The lead assembly of claim 2 wherein said at least one feeder cable includes a section of exposed wire at said nexus.

4. (Previously Cancelled)

5. (Previously Amended) The lead assembly of claim 1 wherein said overmold defines at least one aperture.

6. (**Currently Amended**) A solar power system comprising:

A. A first plurality of solar panels electrically coupled by a first wire harness to form a first solar array;

B. A second plurality of solar panels electrically coupled by a second wire harness to form a second solar array;

C. A lead assembly including a first drop line electrically connected to said first wire harness, and a **30 amp** feeder cable electrically connected to a component selected from the group consisting of a trunk buss jumper, an inverter, a connection unit, a recombiner, and a disconnect unit, said first drop line and said feeder cable electrically connected at a first nexus secured by a compression lug, said compression lug surrounded by an undermold having an inner surface and an outer surface, said inner surface surrounding and fully encasing said compression lug, with said undermold surrounded by an overmold and forming an undermold-overmold interface only at said outer surface, wherein said lead assembly has a voltage rating ~~**selected from the group consisting of 600 VDC, 1000 VDC,**~~ **of** 1500 VDC ~~**and combinations thereof**~~; and

D. A second drop line electrically connected to said second wire harness, said second drop line electrically connected to said feeder cable at a second nexus, wherein the solar power system doesn't include a combiner box upstream of said component.

7. (Previously Cancelled)

8. (Previously Cancelled)

9. (Original) The solar power system of claim 6 wherein said lead assembly includes an end piece.

10. (Original) The solar power system of claim 6 wherein said first drop line terminates in a drop line connector.

11. (Original) The solar power system of claim 6 wherein said feeder cable terminates in a feeder cable connector.

12. (Original) The solar power system of claim 6 wherein said first drop line includes 18 to 4 gauge wire.

13. (Original) The solar power system of claim 6 wherein said feeder cable includes 6 gauge to 1000MCM wire.

14. (Previously Amended) The solar power system of claim 6 wherein said first nexus is surrounded by said compression lug.

15. (Previously Cancelled)

16. (Previously Cancelled)

17. (Previously Withdrawn) A method of constructing a solar power installation including the steps of:

A. Connecting a first plurality of solar panels to a first wire harness to form a first solar array;

B. Connecting said first wire harness to the first drop line of a lead assembly;

C. Connecting a second plurality of solar panels to a second wire harness to form a second solar array;

D. Connecting said second wire harness to the second drop line of said lead assembly; and

E. Electrically coupling said lead assembly to an inverter without electrically coupling to a combiner box.

18. (Previously Withdrawn) The method of claim 17 wherein said step of electrically coupling said lead assembly to an inverter includes the steps of electrically coupling a feeder cable to said inverter.

19. (Previously Added) The lead assembly of claim 1 wherein said undermold is injection molded.

20. (Previously Added) The lead assembly of claim 1 wherein said overmold is injection molded.

Voltage, LLC
EX1021-168

Remarks

Applicant gratefully acknowledges the Office Action dated 9/24/18. Upon considering the Office's cited art and remarks, and interviewing the case with Examiner Smith, claims 1 and 6 have been amended. Claims 4, 7, 8, 15 and 16 were previously cancelled, claims 17 and 18 were previously withdrawn, and claims 19 and 20 were previously added. Accordingly, claims **1**-3; 5; **6**; 9-14; 19 and 20 are currently pending, with no claims allowable at this time.

The Office's specific issues are addressed as follows:

I. 35 USC §112(a) Rejection of Claims 1-3, 5, 6, 9-14, 19 and 20 as failing to comply with the written description requirement

Independent claims 1 and 6 have been amended to remove the Markush group and instead claim that the lead assembly has a voltage rating of 1500 VDC. Withdrawal of the written description rejection is respectfully requested.

No new matter has been introduced.

II. 35 USC §112(b) Rejection of Claims 1-3, 5, 6, 9-14, 19 and 20 as being indefinite

Independent claims 1 and 6 have been amended to remove the Markush group and instead claim that the lead assembly has a voltage rating of 1500 VDC. Withdrawal of the indefiniteness rejection is respectfully requested.

No new matter has been introduced.

Voltage, LLC
EX1021-169

III. 35 USC §103(b) Rejection of Claims 1-3, 5, 19 and 20 as obvious in view of Jonczyk, Avrutsky and Yamawaki

Independent claim 1 has been amended to claim a lead assembly having a voltage rating of 1500 VDC, and a 30 amp cable. These features are not taught by Jonczyk, Avrutsky or Yamawaki.

Based on this amendment it is believed that claim 1, and claims 2, 3, 5, 19 and 20 that depend from claim 1, overcome the art of record.

Now new matter has been introduced.[1]

IV. 35 USC §103(b) Rejection of Claims 6, 9-12, and 14 as obvious in view of Jonczyk, Avrutsky, Arai and Yamawaki

Independent claim 6 has been amended to claim a lead assembly having a voltage rating of 1500 VDC, and a 30 amp cable. These features are not taught by Jonczyk, Avrutsky, Arai or Yamawaki.

Based on this amendment it is believed that claim 6, and claims 9-12 and 14 that depend from claim 6, overcome the art of record.

Now new matter has been introduced.[2]

---

[1] See page 10, lines 16-21 of originally filed specification which recites: "An embodiment of the present invention preferably has the following specifications: Voltage rating of 600 VDC / 1000 VDC / 1500 VDC; Maximum branch current of 30 amps per string; Maximum overcurrent protection of 30 amps per string; maximum trunk cable size of 750MCM; and Maximum ambient operating temperature of 50º C, although other embodiments beyond these specifications are within the scope of the inventions."

[2] See page 10, lines 16-21 of originally filed specification which recites: "An embodiment of the present invention preferably has the following specifications: Voltage rating of 600 VDC / 1000 VDC / 1500 VDC; Maximum branch current of 30 amps per string; Maximum overcurrent protection of 30 amps per string; maximum trunk cable size of 750MCM; and Maximum ambient operating temperature of 50º C, although other embodiments beyond these specifications are within the scope of the inventions."

Voltage, LLC
EX1021-170

V. 35 USC §103(b) Rejection of Claim 13 as obvious in view of Jonczyk, Avrutsky, Arai, Yamawaki and Ramsey

This rejection is deemed moot in view of the amendment to claim 6 discussed in Section IV above, and claim 13's dependence on claim 6.

Conclusion

For the reasons set forth herein, Applicant believes all claims are allowable over the art of record.

Examiner Smith is earnestly encouraged to contact Attorney Gannon by telephone or email to resolve any outstanding issues, or to discuss claim amendments which would facilitate allowance.

Respectfully submitted,

/Carla L. Gannon, 56,358/

Carla L. Gannon
Registration No. 56,358
Carla Gannon Law
8903 E. Oak Island Dr.
Suite 9
Oak Island, NC 28465
336-543-3797
cgannon@carlagannonlaw.com

Date: March 25, 2019
File No.: SHOALS-59

Voltage, LLC
EX1021-171

UNITED STATES PATENT AND TRADEMARK OFFICE

UNITED STATES DEPARTMENT OF COMMERCE
United States Patent and Trademark Office
Address: COMMISSIONER FOR PATENTS
P.O. Box 1450
Alexandria, Virginia 22313-1450
www.uspto.gov

APPLICATION NO.	FILING DATE	FIRST NAMED INVENTOR	ATTORNEY DOCKET NO.	CONFIRMATION NO.
14/849,458	09/09/2015	Dean Solon	SHOALS-59	5067

57825 7590 09/24/2018
CARLA GANNON LAW
Carla L. Gannon, Esq.
8903 E. Oak Island Dr.
Suite 9
Oak Island, NC 28465

EXAMINER
SMITH, ERIC R

ART UNIT	PAPER NUMBER
1726	

NOTIFICATION DATE	DELIVERY MODE
09/24/2018	ELECTRONIC

Please find below and/or attached an Office communication concerning this application or proceeding.

The time period for reply, if any, is set in the attached communication.

Notice of the Office communication was sent electronically on above-indicated "Notification Date" to the following e-mail address(es):

carlagannon@yahoo.com
cgannon@carlagannonlaw.com
docketing@carlagannonlaw.com

Voltage, LLC
EX1021-172

Office Action Summary	Application No. 14/849,458	Applicant(s) Solon, Dean	
	Examiner ERIC R SMITH	Art Unit 1726	AIA Status Yes

-- The MAILING DATE of this communication appears on the cover sheet with the correspondence address --

Period for Reply

A SHORTENED STATUTORY PERIOD FOR REPLY IS SET TO EXPIRE 3 MONTHS FROM THE MAILING DATE OF THIS COMMUNICATION.

- Extensions of time may be available under the provisions of 37 CFR 1.136(a). In no event, however, may a reply be timely filed after SIX (6) MONTHS from the mailing date of this communication.
- If NO period for reply is specified above, the maximum statutory period will apply and will expire SIX (6) MONTHS from the mailing date of this communication.
- Failure to reply within the set or extended period for reply will, by statute, cause the application to become ABANDONED (35 U.S.C. § 133). Any reply received by the Office later than three months after the mailing date of this communication, even if timely filed, may reduce any earned patent term adjustment. See 37 CFR 1.704(b).

Status

1)☑ Responsive to communication(s) filed on 6/6/2018.

☐ A declaration(s)/affidavit(s) under **37 CFR 1.130(b)** was/were filed on _____.

2a)☐ This action is **FINAL.** 2b) ☑ This action is non-final.

3)☐ An election was made by the applicant in response to a restriction requirement set forth during the interview on _____; the restriction requirement and election have been incorporated into this action.

4)☐ Since this application is in condition for allowance except for formal matters, prosecution as to the merits is closed in accordance with the practice under *Ex parte Quayle*, 1935 C.D. 11, 453 O.G. 213.

Disposition of Claims*

5) ☑ Claim(s) 1-3,5-6,9-14 and 17-20 is/are pending in the application.

5a) Of the above claim(s) 17-18 is/are withdrawn from consideration.

6) ☐ Claim(s) _____ is/are allowed.

7) ☑ Claim(s) 1-3,5-6,9-14 and 19-20 is/are rejected.

8) ☐ Claim(s) _____ is/are objected to.

9) ☐ Claim(s) _____ are subject to restriction and/or election requirement

* If any claims have been determined allowable, you may be eligible to benefit from the **Patent Prosecution Highway** program at a participating intellectual property office for the corresponding application. For more information, please see http://www.uspto.gov/patents/init_events/pph/index.jsp or send an inquiry to **PPHfeedback@uspto.gov.**

Application Papers

10)☐ The specification is objected to by the Examiner.

11)☐ The drawing(s) filed on _____ is/are: a)☐ accepted or b)☐ objected to by the Examiner.

Applicant may not request that any objection to the drawing(s) be held in abeyance. See 37 CFR 1.85(a).

Replacement drawing sheet(s) including the correction is required if the drawing(s) is objected to. See 37 CFR 1.121(d).

Priority under 35 U.S.C. § 119

12)☐ Acknowledgment is made of a claim for foreign priority under 35 U.S.C. § 119(a)-(d) or (f).

Certified copies:

a)☐ All b)☐ Some** c)☐ None of the:

1.☐ Certified copies of the priority documents have been received.

2.☐ Certified copies of the priority documents have been received in Application No. _____.

3.☐ Copies of the certified copies of the priority documents have been received in this National Stage application from the International Bureau (PCT Rule 17.2(a)).

** See the attached detailed Office action for a list of the certified copies not received.

Attachment(s)

1) ☑ Notice of References Cited (PTO-892)

2) ☐ Information Disclosure Statement(s) (PTO/SB/08a and/or PTO/SB/08b) Paper No(s)/Mail Date _____.

3) ☐ Interview Summary (PTO-413) Paper No(s)/Mail Date _____.

4) ☐ Other: _____.

Voltage, LLC
EX1021-173

The present application, filed on or after March 16, 2013, is being examined under the first inventor to file provisions of the AIA.

DETAILED ACTION

Continued Examination Under 37 CFR 1.114

A request for continued examination under 37 CFR 1.114, including the fee set forth in 37 CFR 1.17(e), was filed in this application after final rejection. Since this application is eligible for continued examination under 37 CFR 1.114, and the fee set forth in 37 CFR 1.17(e) has been timely paid, the finality of the previous Office action has been withdrawn pursuant to 37 CFR 1.114. Applicant's submission filed on 6/6/2018 has been entered.

Response to Amendment

The amendment filed 6/6/2018 does not place the application in condition for allowance.

The rejections over 35 U.S.C. 112(b) are withdrawn due to Applicant's amendment.

The previous art rejections are revised to incorporate new claim limitations.

Claim Interpretation

The examiner notes that claim 1 recites the phrase "a means for securing said nexus". In some circumstances, use of the word "means" (or "step for") in a claim with functional language creates a rebuttable presumption that the claim element is to be treated in accordance with 35 U.S.C. 112(f) (pre-AIA 35 U.S.C. 112, sixth paragraph). The presumption that 35 U.S.C. 112(f) (pre-AIA 35 U.S.C. 112, sixth paragraph) is invoked is rebutted when the function is recited with sufficient structure, material, or acts within the claim itself to entirely perform the recited function. The phrase is immediately followed by a Markush group of potential structural elements or product-by-process limitations which would fulfill such means. Therefore the phrase is not interpreted to be an invocation of 35 U.S.C. 112(f) (pre-AIA 35

U.S.C. 112, sixth paragraph), as the Markush group recites sufficient structure, materials or acts to perform the recited function. Further, the examiner notes that the discussion of such means at the bottom of page 9 of the instant specification is no narrower in scope than the Markush group. For more information, see MPEP § 2173 *et seq.* and *Supplementary Examination Guidelines for Determining Compliance With 35 U.S.C. 112 and for Treatment of Related Issues in Patent Applications*, 76 FR 7162, 7167 (Feb. 9, 2011).

Claims 1 and 6 recite that the lead assembly has a voltage rating of a particular value. The definition of "voltage rating" is "the maximum sustained voltage that can be safely applied to an electric device without risking the possibility of electric breakdown. Also known as working voltage."

Claim Rejections - 35 USC § 112

The following is a quotation of the first paragraph of 35 U.S.C. 112(a):

> (a) IN GENERAL.—The specification shall contain a written description of the invention, and of the manner and process of making and using it, in such full, clear, concise, and exact terms as to enable any person skilled in the art to which it pertains, or with which it is most nearly connected, to make and use the same, and shall set forth the best mode contemplated by the inventor or joint inventor of carrying out the invention.

The following is a quotation of the first paragraph of pre-AIA 35 U.S.C. 112:

> The specification shall contain a written description of the invention, and of the manner and process of making and using it, in such full, clear, concise, and exact terms as to enable any person skilled in the art to which it pertains, or with which it is most nearly connected, to make and use the same, and shall set forth the best mode contemplated by the inventor of carrying out his invention.

Claims 1-3, 5, 6, 9-14, 19, and 20 rejected under 35 U.S.C. 112(a) or 35 U.S.C. 112 (pre-AIA), first paragraph, as failing to comply with the written description requirement. The claim(s) contains subject matter which was not described in the specification in such a way as to reasonably convey to one skilled in the relevant art that the inventor or a joint inventor, or for pre-AIA the inventor(s), at the time the application was filed, had possession of the claimed invention.

Claims 1 and 6 recite that the lead assembly has a voltage rating selected from the group consisting of 600 VDC, 1000 VDC, 1500 VDC and combinations thereof. Page 10, third full paragraph of the instant specification recites: "An embodiment of the present invention preferably has the following specifications: Voltage rating of 600 VDC / 1000 VDC / 1500 VDC". The specification lacks support for "and combinations thereof". **Claims 2, 3, 5, 19, and 20** are rejected based on their dependence from claim 1. **Claims 9-14** are rejected based on their dependence from claim 6.

The following is a quotation of 35 U.S.C. 112(b):
(b) CONCLUSION.—The specification shall conclude with one or more claims particularly pointing out and distinctly claiming the subject matter which the inventor or a joint inventor regards as the invention.

The following is a quotation of 35 U.S.C. 112 (pre-AIA), second paragraph:
The specification shall conclude with one or more claims particularly pointing out and distinctly claiming the subject matter which the applicant regards as his invention.

Claims 1-3, 5, 6, 9-14, 19, and 20 rejected under 35 U.S.C. 112(b) or 35 U.S.C. 112 (pre-AIA), second paragraph, as being indefinite for failing to particularly point out and distinctly claim the subject matter which the inventor or a joint inventor, or for pre-AIA the applicant regards as the invention.

Claims 1 and 6 recite that the lead assembly has a voltage rating selected from the group consisting of 600 VDC, 1000 VDC, 1500 VDC and combinations thereof. As best can be understood by the examiner, the voltage rating of the assembly as a whole derives from the voltage ratings of each of the combination of sub-elements which form the lead assembly. However, it is unclear how the lead assembly can have a voltage rating that is a combination of values. In other words, wouldn't a lead assembly with a voltage rating of 1500 VDC also have a voltage rating of 600 VDC and 1000 VDC?

In another interpretation, a person having ordinary skill in the art may presume that "and combinations thereof" implies that each sub-element of the lead assembly has a distinct voltage rating. However, this is not supported by the specification. Page 10, third full paragraph of the instant

specification is the only reference to a voltage rating: "An embodiment of the present invention preferably has the following specifications: Voltage rating of 600 VDC / 1000 VDC / 1500 VDC".

Therefore claims 1 and 6 are indefinite due to the phrase "and combinations thereof". **Claims 2, 3, 5, 19, and 20** are rejected based on their dependence from claim 1. **Claims 9-14** are rejected based on their dependence from claim 6.

Claim Rejections - 35 USC § 103

The text of those sections of Title 35, U.S. Code not included in this action can be found in a prior Office action.

Claims 1-3, 5, 19, and 20 is/are rejected under 35 U.S.C. 103 as being unpatentable over US PGPub 2010/0139733 to Jonczyk (of record), and further in view of US PGPub 2012/0217973 to Avrutsky (of record), and US Patent 6,268,559 to Yamawaki (of record).

Regarding claim 1-3, 5, 19, and 20, Jonczyk teaches a lead assembly including

A. a first drop line 56 and a second drop line 58, the first drop line terminating in a drop line connector 66 (Figs. 2, 3, ¶0025, 0026, 0029, 0030)

B. at least one feeder cable (analogous element 52) terminating in a feeder cable connector 74, the first drop line 56 and the at least one feeder cable electrically coupled at a nexus (the two cables physically meet at a nexus coincident with the cutout 4 in Fig. 3, ¶0027, 0031, 0032)

C. a means for securing the nexus, the securing means being crimping (element 32 is a crimp barrel, Fig. 4)

D. A mold 82 having an inner surface and an outer surface, the inner surface surrounding and fully encasing the securing means 32.

Jonczyk does not teach that the mold 82 is an undermold, with the undermold surrounded by an overmold and forming an overmold-undermold interface only at the outer surface. Yamawaki also

teaches a mold (element 33e of Figs. 9) within which a nexus is formed between cables and lines (31), which is an undermold having an outer surface (partially exposed in Fig. 9B) is surrounded by an overmold (33f), forming an undermold-overmold interface at the outer surface (Fig. 9B shows that the lower edge portion of 33f extending in the thickness direction of that element exposed by the cutaway precisely intersects with the edge of the exposed face of 33e, thus showing that an outer surface of the undermold forms an interface with the overmold), so that the overmold may improve water resistance of the junction between cables and lines (C10/L17-24, C10/L33-49, C3/L6-18). Therefore it would have been obvious as of the effective filing date of the claimed invention for a person having ordinary skill in the art to form an overmold over the undermold of Jonczyk, so that the undermold is surrounded by the overmold and forms an undermold-overmold interface only at the outer surface in order to improve water resistance of the connection between the first drop line and feeder cable.

Jonczyk teaches that the lead assembly provides a DC voltage to a downstream device which can convert the power to AC voltage (¶0040). Further, Jonczyk teaches that the conventional DC voltage of 600 V or 1000 V fed to this downstream device (¶0002, 0036). Further, the wires/conductor used to form the drop lines and feeder cables have a voltage rating of at least 600 V (¶0025, 0028, 0030), which would understood by a person having ordinary skill in the to be 600 VDC based on the location of the lines and cables upstream of the device. The cable connectors also have a voltage rating of at least 600 VDC or 1000 V (last lines of ¶0025, 0028; also see ¶0027). Further, other elements in the system have a voltage rating of 600 VDC (fuse 40, ¶0027). Therefore it would have been obvious as of the effective filing date of the claimed invention for a person having ordinary skill in the art to form the lead assembly of modified-Jonczyk to have a voltage rating of 600 VDC or 1000 VDC because it is conventional to provide that voltage to downstream devices for conversion to AC.

The claim is drawn to a lead assembly. The limitations of the preamble that the lead assembly is for use in a solar energy installation, and that the lead assembly combines power from a plurality of

solar arrays and transmits that power to an inverter in a solar energy installation lacking a combiner box between the solar arrays and the inverter are intended use limitation. Intended use limitations are given weight to the extent that the prior art structure is capable of performing the intended use. See MPEP § 2111.02, 2112.01 and 2114-2115. The examiner interprets the lead assembly of modified-Jonczyk to necessarily be capable of performing those intended uses, as the lead assembly has the recited structure. Where the claimed and prior art products are identical or substantially identical in structure or composition, or are produced by identical or substantially identical processes, a *prima facie* case of either anticipation or obviousness has been established. *In re Best,* 562 F.2d 1252, 1255, 195 USPQ 430, 433 (CCPA 1977). "When the PTO shows a sound basis for believing that the products of the applicant and the prior art are the same, the applicant has the burden of showing that they are not." *In re Spada,* 911 F.2d 705, 709, 15 USPQ2d 1655, 1658 (Fed. Cir. 1990). Further, Jonczyk teaches that such a lead assembly is capable of performing several of those intended uses (Fig. 12, ¶0040).

In the event that the intended use limitations can be shown to define the structure or properties of the claimed assembly, Jonczyk teaches that such a lead assembly is capable of being used in a solar energy installation 240, to combine power from a plurality of solar arrays 242 and transmit the power to an inverter. Avrutsky teaches a similar installation (element 100 of Fig. 1) with an analogous lead assembly (105), and teaches that such an installation may comprise a combiner box (106) between a plurality of solar arrays and an inverter (103), or that such a combiner box may alternatively be omitted ("the string bus 105 can be connected to the inverter 105 directly or as a part of a mesh network or combiner boxes or fuse boxes", ¶0028, 0029). The omission of an element and its function is obvious if the function of the element is not desired. MPEP §2144.04.II. Therefore it would have been obvious to a person having ordinary skill in the art as of the effective filing date of the claimed invention that the claimed lead assembly could be used in a solar energy installation lacking a combiner box between solar arrays and the inverter, as Avrutsky teaches that a combiner box may be omitted if desired.

Per claims 2 and 3, modified-Jonczyk teaches the limitations of claim 1. Jonczyk teaches that the first drop line 56 and the at least one feeder cable 52 each include a section of exposed wire at the nexus (Fig.4, ¶0032).

Per claim 5, modified-Jonczyk teaches the limitations of claim 1. Yamawaki teaches that the overmold (33f) of that invention defines apertures (at 33a, 33b, 33c) which allow cables and lines access to the nexus within (Figs. 9, C10/L62-C11/L2). Since Yamawaki and Jonczyk share the features of cables and lines which require access to the nexus, a skilled artisan would form the overmold to define at least one aperture in order to allow cables and lines to access the nexus.

Per claims 19 and 20, modified-Jonczyk teaches the limitations of claim 1. The limitations that the undermold and overmold are injection molded are product-by-process limitations. The patentability of a product does not depend on its method of production. If the product in the product-by-process claim is the same as or obvious from a product of the prior art, the claim is unpatentable even though the prior product was made by a different process." *In re Thorpe,* 777 F.2d 695, 698, 227 USPQ 964, 966 (Fed. Cir. 1985). MPEP §2113.I. The combination of references teaches the structure of the claimed undermold and overmold.

Claims 6, 9-12, and 14 is/are rejected under 35 U.S.C. 103 as being unpatentable over Jonczyk, and further in view of Avrutsky, US PGPub 2010/0258157 to Arai (of record), and Yamawaki.

Regarding claim 6, 9-12, and 14, Jonczyk teaches a solar power system comprising

A. A first plurality of solar panels 244 (e. g. top left element 242 in Fig. 12) electrically coupled to form a first solar array (¶0039, 0040)

B. A second plural of solar panels 244 (e. g. element 242 below the top left element 242) electrically coupled to form a second solar array

C. A lead assembly 190 including a first drop line (analogous element 56 of Figs. 2, 3) electrically connected to first solar array, and a feeder cable (analogous element 52) electrically connected to an inverter 254, the first drop line and the feeder cable electrically connected at a first nexus (the two cables physically meet at a nexus coincident with the cutout 4 in Fig. 3, ¶0025-0032)

D. A second drop line (analogous element 58) electrically connected to the second solar array, the second drop line electrically connected to the feeder cable at a second nexus (overlapping with element 84).

Jonczyk teaches a combiner box 252 between the solar arrays and the inverter. Avrutsky teaches a similar system (element 100 of Fig. 1) with an analogous lead assembly (105), and teaches that such an installation may comprise a combiner box (106) between a plurality of solar arrays and an inverter (103), or that such a combiner box may alternatively be omitted ("the string bus 105 can be connected to the inverter 105 directly or as a part of a mesh network or combiner boxes or fuse boxes", ¶0028, 0029). The omission of an element and its function is obvious if the function of the element is not desired. MPEP §2144.04.II. Therefore it would have been obvious to a person having ordinary skill in the art as of the effective filing date of the claimed invention that the claimed lead assembly could be used in a solar energy installation lacking a combiner box between solar arrays and the inverter, as Avrutsky teaches that a combiner box may be omitted if desired. As such, the system of modified-Jonczyk would not include a combiner box upstream of the inverter.

Jonczyk teaches that the solar panels of the first and second solar arrays are part of an electrical circuit, but does not specifically teach that they are coupled by a first and second wire harness, respectively. Arai teaches that such a circuit of solar panels can be coupled by a wire harness (Fig. 10, ¶0009, 0078-0081). The combination of familiar elements is likely to be obvious when it does no more than yield predictable results. See *KSR International Co. v. Teleflex Inc.*, 550 U.S. 398, 415-421, 82 USPQ2d 1385, 1395 – 97 (2007) (see MPEP § 2143, A.). Therefore it would have been obvious as of the

effective filing date to electrically couple the first (second) plurality of solar panels by a first (second) wire harness to form the first (second) solar array because such an element is commonly used to form arrays. Further, a person having ordinary skill in the art would appreciate that the first (second) drop line should be electrically connected to the first (second) wire harness in order to provide the electrical connection of the arrays to the inverter of modified-Jonczyk, as Arai teaches that such harnesses are used in that way.

The limitation that the first nexus is secured by a compression lug is interpreted in light of the instant disclosure. Figure 36 of the drawings shows a compression lug, with the form of a cylinder. Figures 35 and 37, and the bottom of page 9 of the specification, describe how the lug fits around the feeder cable and drop line, such that the lug holds the line and cable in contact. Figure 7 also shows an interaction between a lug, drop line, and feeder cable. A person having ordinary skill in the art would appreciate that an element analogous to element 32 of Fig. 4 of Jonczyk, having the form of a cylinder (compare Figs. 2, and 4, which show that element 32 has a rectangular profile in a top-down view and a circular profile in a cross-sectional view) surrounds the nexus and holds the exposed portions of the line and cable in contact (¶0032). Therefor a person having ordinary skill in the art would appreciate that the first nexus of Jonczyk is secured by a compression lug.

Jonczyk teaches that the compression lug 32 securing the first nexus establishes conductive contact between the feeder cable and first drop line, and that the compression lug and nexus is surrounded by a mold 82 having an inner surface and an outer surface, the inner surface in direct contact with and fully encasing the compression lug (Figs. 3, 4, ¶0031), but does not teach that the mold is an undermold, with the undermold surrounded by an overmold and forming an overmold-undermold interface only at the outer surface.

Yamawaki also teaches a mold (element 33e of Figs. 9) within which a nexus is formed between cables and lines (31), which is an undermold having an outer surface (partially exposed in Fig. 9B) is

surrounded by an overmold (33f), forming an undermold-overmold interface at the outer surface (Fig. 9B shows that the lower edge portion of 33f extending in the thickness direction of that element exposed by the cutaway precisely intersects with the edge of the exposed face of 33e, thus showing that an outer surface of the undermold forms an interface with the overmold), so that the overmold may improve water resistance of the junction between cables and lines (C10/L17-24, C10/L33-49, C13/L6-18). Therefore it would have been obvious as of the effective filing date of the claimed invention for a person having ordinary skill in the art to form an overmold over the undermold of Jonczyk, so that the undermold is surrounded by the overmold and forms an undermold-overmold interface only at the outer surface in order to improve water resistance of the connection between the first drop line and feeder cable.

Jonczyk teaches that the lead assembly provides a DC voltage to a downstream device which can convert the power to AC voltage (¶0040). Further, Jonczyk teaches that the conventional DC voltage of 600 V or 1000 V fed to this downstream device (¶0002, 0036). Further, the wires/conductor used to form the drop lines and feeder cables have a voltage rating of at least 600 V (¶0025, 0028, 0030), which would understood by a person having ordinary skill in the to be 600 VDC based on the location of the lines and cables upstream of the device. The cable connectors also have a voltage rating of at least 600 VDC or 1000 V (last lines of ¶0025, 0028; also see ¶0027). Further, other elements in the system have a voltage rating of 600 VDC (fuse 40, ¶0027). Therefore it would have been obvious as of the effective filing date of the claimed invention for a person having ordinary skill in the art to form the lead assembly of modified-Jonczyk to have a voltage rating of 600 VDC or 1000 VDC because it is conventional to provide that voltage to downstream devices for conversion to AC.

Per claim 9, modified-Jonczyk teaches the limitations of claim 6. Jonczyk teaches that the lead assembly 190 includes an end piece (analogous element 74 of Fig. 2, ¶0030).

Per claim 10, modified-Jonczyk teaches the limitations of claim 6. Jonczyk teaches that the first

drop line terminates in a drop line connector (analogous element 66 of Fig. 2, ¶0028).

Per claim 11, modified-Jonczyk teaches the limitations of claim 6. Jonczyk teaches that the feeder cable terminates in a feeder cable connector (analogous element 162 in Fig. 7, ¶0034).

Per claim 12, modified-Jonczyk teaches the limitations of claim 6. Jonczyk teaches that the first drop line (described as being formed of secondary conductor in ¶0028) may be include 10 gauge or 12 gauge wire (¶0025). This is interpreted to be within the range "18 to 4 gauge wire". In the case where the claimed ranges "overlap or lie inside ranges disclosed by the prior art" a *prima facie* case of obviousness exists. *In re Wertheim,* 541 F.2d 257, 191 USPQ 90 (CCPA 1976); *In re Woodruff,* 919 F.2d 1575, 16 USPQ2d 1934 (Fed. Cir. 1990). MPEP §2144.05.

Per claim 14, modified-Jonczyk teaches the limitations of claim 6. Jonczyk teaches that the compression lug 32 surrounds the first nexus (see previously cited passages, Figs., and reasoning).

Claim 13 is/are rejected under 35 U.S.C. 103 as being unpatentable over Jonczyk, Avrutsky, Arai, and Yamawaki as applied to claim 6 above, and further in view of US PGPub 2013/0269746 to Ramsey (of record). Supporting information is provided by US PGPub 2009/0300909 to Kummer and US PGPub 2011/0174521 to Hernandez (both of record).

Regarding claim 13, modified-Jonczyk teaches the limitations of claim 6. The limitation that the feeder cable includes 6 gauge to 1000MCM wire is interpreted according to ¶0023 of Kummer and Table 1 of Hernandez, which teaches that a 6 gauge wire has a diameter of 4.53 mm (at a particular temperature), and that 1000 MCM wire has diameter of 28.39 mm. Jonczyk teaches that the feeder cable (described as being formed of primary conductor in ¶0028) may be include 8 gauge wire (¶0025).

Ramsey, however, teaches that a gauge of wire can be varied according to the current being carried on the wire (¶0005, 0008, 0009, 0025). Therefore it would have been obvious to vary the size of the wire that forms the feeder cable according to the current being carried on the wire. The court has

held that absent evidence of criticality or unexpected results, optimization of a result effective variable will not support the patentability of subject matter encompassed by the prior art. "[W]here the general conditions of a claim are disclosed in the prior art, it is not inventive to discover the optimum or workable ranges by routine experimentation." See *In re Aller,* 220 F.2d 454, 456, 105 USPQ 233, 235 (CCPA 1955). See also MPEP §2144.05.

Response to Arguments

Applicant's arguments with respect to claims 1-3, 5, 6, 9-14, 19, and 20 have been considered but are not found persuasive.

Applicant argues that the combination of Yamawaki and Jonczyk is improper because the combination of overmold and undermold discussed in Yamawaki is only suitable for systems carrying lower amperage. Applicant did not identify, and examiner could not locate, a teaching of an amperage used in Yamawaki, or a teaching against using the molds of that invention in systems carrying higher amperage. Therefore the suggestion of the disparate amperage is considered an argument of counsel, and cannot independently be considered evidence. Further, the assertion that the combination of teachings would not be able to handle the voltage and would pose an electrocution and/or fire hazard is also unsupported by evidence. The arguments of counsel cannot take the place of evidence in the record. *In re Schulze,* 346 F.2d 600, 602, 145 USPQ 716, 718 (CCPA 1965).

Further, while the newly amended claims recite a voltage rating, no claim recites a current handled by the lead assembly or its sub-elements. In response to applicant's argument that the references fail to show certain features of applicant's invention, it is noted that the features upon which applicant relies (i.e., the amperage carried by the lead assembly) are not recited in the rejected claim(s). Although the claims are interpreted in light of the specification, limitations from the specification are not read into the claims. See *In re Van Geuns*, 988 F.2d 1181, 26 USPQ2d 1057 (Fed. Cir. 1993).

Finally, the examiner notes that the previously-cited reference Jonczyk provides sufficient motivation to form the lead assembly of modified-Joncyzk to have a voltage rating of 600 VDC or 1000 VDC, as reasoned in the rejections of the claims above.

Conclusion

Any inquiry concerning this communication or earlier communications from the examiner should be directed to ERIC R SMITH whose telephone number is (571)270-7186. The examiner can normally be reached on M-F, 8:30am-5:30pm MST.

Examiner interviews are available via telephone, in-person, and video conferencing using a USPTO supplied web-based collaboration tool. To schedule an interview, applicant is encouraged to use the USPTO Automated Interview Request (AIR) at http://www.uspto.gov/interviewpractice.

If attempts to reach the examiner by telephone are unsuccessful, the examiner's supervisor, Jeffrey Barton can be reached on (571) 272-1307. The fax phone number for the organization where this application or proceeding is assigned is 571-273-8300.

Information regarding the status of an application may be obtained from the Patent Application Information Retrieval (PAIR) system. Status information for published applications may be obtained from either Private PAIR or Public PAIR. Status information for unpublished applications is available through Private PAIR only. For more information about the PAIR system, see http://pair-direct.uspto.gov. Should you have questions on access to the Private PAIR system, contact the Electronic Business Center (EBC) at 866-217-9197 (toll-free). If you would like assistance from a USPTO Customer Service Representative or access to the automated information system, call 800-786-9199 (IN USA OR CANADA) or 571-272-1000.

ERIC R. SMITH
Primary Examiner
Art Unit 1726

/ERIC R SMITH/
Primary Examiner, Art Unit 1726

Notice of References Cited	Application/Control No. 14/849,458	Applicant(s)/Patent Under Reexamination Solon, Dean	
	Examiner ERIC R SMITH	Art Unit 1726	Page 1 of 1

U.S. PATENT DOCUMENTS

*		Document Number Country Code-Number-Kind Code	Date MM-YYYY	Name	CPC Classification	US Classification
	A					
	B					
	C					
	D					
	E					
	F					
	G					
	H					
	I					
	J					
	K					
	L					
	M					

FOREIGN PATENT DOCUMENTS

*		Document Number Country Code-Number-Kind Code	Date MM-YYYY	Country	Name	CPC Classification
	N					
	O					
	P					
	Q					
	R					
	S					
	T					

NON-PATENT DOCUMENTS

*		Include as applicable: Author, Title Date, Publisher, Edition or Volume, Pertinent Pages)
	U	Definition of "working voltage" [retrieved from https://encyclopedia2.thefreedictionary.com/voltage+rating on 9/18/2018].
	V	
	W	
	X	

*A copy of this reference is not being furnished with this Office action. (See MPEP § 707.05(a).)
Dates in MM-YYYY format are publication dates. Classifications may be US or foreign.

Voltage, LLC
EX1021-188

Search Notes	Application/Control No.	Applicant(s)/Patent Under Reexamination
	14/849,458	Solon, Dean
	Examiner	Art Unit
	ERIC R SMITH	1726

CPC - Searched*		
Symbol	**Date**	**Examiner**
H01L31/0422,0424,0482,0484,05	1/16/2014	ERS
E04D3/40	1/17/2014	ERS
H01L31/02013,02008,02021	7/1/2014	ERS
H02S40/00-38	5/23/2014	ERS
H01R4/187,18,70	11/30/2017	ERS

CPC Combination Sets - Searched*		
Symbol	**Date**	**Examiner**

US Classification - Searched*			
Class	**Subclass**	**Date**	**Examiner**
52	173.3	7/16/2013	ERS
136	243-265	7/16/2013	ERS

* See search history printout included with this form or the SEARCH NOTES box below to determine the scope of the search.

Search Notes	Application/Control No.	Applicant(s)/Patent Under Reexamination
	14/849,458	Solon, Dean
	Examiner	**Art Unit**
	ERIC R SMITH	1726

Search Notes		
Search Notes	**Date**	**Examiner**
Keyword search in USPC subclasses, CPC subgroups, IPC subgroups (see EAST history for search strategy)	5/23/2017	ERS
Inventor search in DAV	5/24/2017	ERS
Keyword search in CPC subgroups (see EAST history for search strategy)	11/30/2017	ERS
Update inventor search in DAV	11/30/2017	ERS
Consulted Fritz Fleming in AU2836	9/13/2018	ERS
Keyword search in EAST databases (see EAST history for search strategy)	9/14/2018	ERS
Updated inventor search in DAV	9/18/2018	ERS

Interference Search			
US Class/CPC Symbol	**US Subclass/CPC Group**	**Date**	**Examiner**

Voltage LLC
EX1021-190

EAST Search History

EAST Search History (Prior Art)

Ref #	Hits	Search Query	DBs	Default Operator	Plurals	Time Stamp
S427	15074	voltage adj rating	US-PGPUB; USPAT	AND	ON	2018/09/13 14:44
S428	204332	voltage near3 rat$3	US-PGPUB; USPAT	AND	ON	2018/09/13 14:44
S429	1658	((voltage adj rating) or (volt$3 near3 rat$3)) with (VDC or direct adj current adj volt$3)	US-PGPUB; USPAT	AND	ON	2018/09/13 14:45
S430	66	((voltage adj rating) or (volt$3 near3 rat$3)) with (VDC or direct adj current adj volt$3) with ("600" or "1000" or "1500")	US-PGPUB; USPAT	AND	ON	2018/09/13 14:46
S431	7	(working adj voltage) with (VDC or direct adj current adj volt$3) with ("600" or "1000" or "1500")	US-PGPUB; USPAT	AND	ON	2018/09/13 15:24

9/18/2018 7:14:05 PM
C:\Users\esmith3\Documents\EAST\Workspaces\Grid_interconnects_specifics\14849458_lead_assembly.wsp

PTO/SB/30EFS (02-18)
Approved for use through 11/30/2020. OMB 0651-0031
U.S. Patent and Trademark Office; U.S. DEPARTMENT OF COMMERCE
Under the Paperwork Reduction Act of 1995, no persons are required to respond to a collection of information unless it contains a valid OMB control number.

REQUEST FOR CONTINUED EXAMINATION(RCE)TRANSMITTAL
(Submitted Only via EFS-Web)

Application Number	14849458	Filing Date	2015-09-09	Docket Number (if applicable)	SHOALS-59	Art Unit	1757
First Named Inventor	DEAN SOLON			Examiner Name	ERIC R. SMITH		

This is a Request for Continued Examination (RCE) under 37 CFR 1.114 of the above-identified application.
Request for Continued Examination (RCE) practice under 37 CFR 1.114 does not apply to any utility or plant application filed prior to June 8, 1995, or to any design application. The Instruction Sheet for this form is located at WWW.USPTO.GOV

SUBMISSION REQUIRED UNDER 37 CFR 1.114

Note: If the RCE is proper, any previously filed unentered amendments and amendments enclosed with the RCE will be entered in the order in which they were filed unless applicant instructs otherwise. If applicant does not wish to have any previously filed unentered amendment(s) entered, applicant must request non-entry of such amendment(s).

☐ Previously submitted. If a final Office action is outstanding, any amendments filed after the final Office action may be considered as a submission even if this box is not checked.

- ☐ Consider the arguments in the Appeal Brief or Reply Brief previously filed on _____
- ☐ Other _____

☒ Enclosed

- ☒ Amendment/Reply
- ☐ Information Disclosure Statement (IDS)
- ☐ Affidavit(s)/ Declaration(s)
- ☐ Other _____

MISCELLANEOUS

☐ Suspension of action on the above-identified application is requested under 37 CFR 1.103(c) for a period of months _____
(Period of suspension shall not exceed 3 months; Fee under 37 CFR 1.17(i) required)

☐ Other _____

FEES

The RCE fee under 37 CFR 1.17(e) is required by 37 CFR 1.114 when the RCE is filed.
☒ The Director is hereby authorized to charge any underpayment of fees, or credit any overpayments, to Deposit Account No 506268

SIGNATURE OF APPLICANT, ATTORNEY, OR AGENT REQUIRED

X Patent Practitioner Signature
Applicant Signature

PTO/SB/30EFS (02-18)
Approved for use through 11/30/2020. OMB 0651-0031
U.S. Patent and Trademark Office; U.S. DEPARTMENT OF COMMERCE
Under the Paperwork Reduction Act of 1995, no persons are required to respond to a collection of information unless it contains a valid OMB control number.

Signature of Registered U.S. Patent Practitioner			
Signature	/Carla L. Gannon/	Date (YYYY-MM-DD)	2018-06-06
Name	Carla L. Gannon	Registration Number	56358

This collection of information is required by 37 CFR 1.114. The information is required to obtain or retain a benefit by the public which is to file (and by the USPTO to process) an application. Confidentiality is governed by 35 U.S.C. 122 and 37 CFR 1.11 and 1.14. This collection is estimated to take 12 minutes to complete, including gathering, preparing, and submitting the completed application form to the USPTO. Time will vary depending upon the individual case. Any comments on the amount of time you require to complete this form and/or suggestions for reducing this burden, should be sent to the Chief Information Officer, U.S. Patent and Trademark Office, U.S. Department of Commerce, P.O. Box 1450, Alexandria, VA 22313-1450.

If you need assistance in completing the form, call 1-800-PTO-9199 and select option 2.

Privacy Act Statement

The Privacy Act of 1974 (P.L. 93-579) requires that you be given certain information in connection with your submission of the attached form related to a patent application or patent. Accordingly, pursuant to the requirements of the Act, please be advised that: (1) the general authority for the collection of this information is 35 U.S.C. 2(b)(2); (2) furnishing of the information solicited is voluntary; and (3) the principal purpose for which the information is used by the U.S. Patent and Trademark Office is to process and/or examine your submission related to a patent application or patent. If you do not furnish the requested information, the U.S. Patent and Trademark Office may not be able to process and/or examine your submission, which may result in termination of proceedings or abandonment of the application or expiration of the patent.

The information provided by you in this form will be subject to the following routine uses:

1. The information on this form will be treated confidentially to the extent allowed under the Freedom of Information Act (5 U.S.C. 552) and the Privacy Act (5 U.S.C. 552a). Records from this system of records may be disclosed to the Department of Justice to determine whether the Freedom of Information Act requires disclosure of these records.

2. A record from this system of records may be disclosed, as a routine use, in the course of presenting evidence to a court, magistrate, or administrative tribunal, including disclosures to opposing counsel in the course of settlement negotiations.

3. A record in this system of records may be disclosed, as a routine use, to a Member of Congress submitting a request involving an individual, to whom the record pertains, when the individual has requested assistance from the Member with respect to the subject matter of the record.

4. A record in this system of records may be disclosed, as a routine use, to a contractor of the Agency having need for the information in order to perform a contract. Recipients of information shall be required to comply with the requirements of the Privacy Act of 1974, as amended, pursuant to 5 U.S.C. 552a(m).

5. A record related to an International Application filed under the Patent Cooperation Treaty in this system of records may be disclosed, as a routine use, to the International Bureau of the World Intellectual Property Organization, pursuant to the Patent Cooperation Treaty.

6. A record in this system of records may be disclosed, as a routine use, to another federal agency for purposes of National Security review (35 U.S.C. 181) and for review pursuant to the Atomic Energy Act (42 U.S.C. 218(c)).

7. A record from this system of records may be disclosed, as a routine use, to the Administrator, General Services, or his/her designee, during an inspection of records conducted by GSA as part of that agency's responsibility to recommend improvements in records management practices and programs, under authority of 44 U.S.C. 2904 and 2906. Such disclosure shall be made in accordance with the GSA regulations governing inspection of records for this purpose, and any other relevant (i.e., GSA or Commerce) directive. Such disclosure shall not be used to make determinations about individuals.

8. A record from this system of records may be disclosed, as a routine use, to the public after either publication of the application pursuant to 35 U.S.C. 122(b) or issuance of a patent pursuant to 35 U.S.C. 151. Further, a record may be disclosed, subject to the limitations of 37 CFR 1.14, as a routine use, to the public if the record was filed in an application which became abandoned or in which the proceedings were terminated and which application is referenced by either a published application, an application open to public inspections or an issued patent.

9. A record from this system of records may be disclosed, as a routine use, to a Federal, State, or local law enforcement agency, if the USPTO becomes aware of a violation or potential violation of law or regulation.

IN THE UNITED STATES PATENT AND TRADEMARK OFFICE

In re Application of: Dean Solon
Serial No.: 14/849,458 **Examiner:** Eric R. Smith
Filed: 09/09/2015 **Art Unit:** 1757
Confirmation No.: 5067
For: LEAD ASSEMBLY FOR CONNECTING SOLAR PANEL ARRAYS TO INVERTER

Commissioner for Patents
PO Box 1450
Alexandria, VA 22313-1450

Sir:

RESPONSE TO FINAL OFFICE ACTION AND
REQUEST FOR CONTINUED EXAMINATION

This paper responds to the Office Action mailed December 6, 2017.

The requisite 3-month extension fee of $700, thereby permitting a Response be filed as late as June 6, 2018, is contemporarily submitted.

A Request for Continued Examination, and the requisite fee of $650 for a small entity's 1st RCE, is submitted contemporaneously with this Response.

In the event additional fees are required, Applicant requests that this be considered the requisite petition.

The Commissioner is hereby authorized to charge any fees associated with this case to 506268.

Voltage, LLC
EX1021-195

RESPONSE TO NON-FINAL OFFICE ACTION

Amendments to the Claims

The current status of the claims is listed in the "Listing of the Claims" below. This replaces all previous versions of claims.

Listing of the Claims:

1. (**Currently Amended**) A lead assembly for use in a solar energy installation including:

   A. A first drop line and a second drop line, said first drop line terminating in a drop line connector;

   B. At least one feeder cable terminating in a feeder cable connector, said first drop line and said at least one feeder cable electrically coupled at a nexus;

   C. A means for securing said nexus, said securing means selected from the group consisting of compression lug, soldering, splicing, crimping, and combinations thereof;

   D. An undermold having an inner surface and an outer surface, said inner surface ~~**in direct contact with**~~ **surrounding** and fully encasing said securing means; and

   E. An overmold surrounding said undermold and forming an undermold-overmold interface only at said outer surface, wherein said lead assembly combines power from a plurality of solar arrays and transmits that power to an inverter in a solar energy installation lacking a combiner box between said solar arrays and said inverter**, and wherein said lead assembly has a voltage rating selected from the group consisting of 600 VDC, 1000 VDC, 1500 VDC and combinations thereof**.

2. (Previously Amended) The lead assembly of claim 1 wherein said first

drop line includes a section of exposed wire at said nexus.

3. (Original) The lead assembly of claim 2 wherein said at least one feeder cable includes a section of exposed wire at said nexus.

4. (Cancelled)

5. (**Currently Amended**) The lead assembly of claim **[[4]]** **<u>1</u>** wherein said overmold defines at least one aperture.

Voltage, LLC
EX1021-197

6. **(Currently Amended)** A solar power system comprising:

A. A first plurality of solar panels electrically coupled by a first wire harness to form a first solar array;

B. A second plurality of solar panels electrically coupled by a second wire harness to form a second solar array;

C. A lead assembly including a first drop line electrically connected to said first wire harness, and a feeder cable electrically connected to a component selected from the group consisting of a trunk buss jumper, an inverter, a connection unit, a recombiner, and a disconnect unit, said first drop line and said feeder cable electrically connected at a first nexus secured by a compression lug, said compression lug surrounded by an undermold having an inner surface and an outer surface, said inner surface ~~**in direct contact with**~~ **surrounding** and fully encasing said compression lug, with said undermold surrounded by an overmold and forming an undermold-overmold interface only at said outer surface**, wherein said lead assembly has a voltage rating selected from the group consisting of 600 VDC, 1000 VDC, 1500 VDC and combinations thereof**; and

D. A second drop line electrically connected to said second wire harness, said second drop line electrically connected to said feeder cable at a second nexus, wherein the solar power system doesn't include a combiner box upstream of said component.

7. (Cancelled)

8. (Cancelled)

9. (Original) The solar power system of claim 6 wherein said lead assembly includes an end piece.

10. (Original) The solar power system of claim 6 wherein said first drop line

terminates in a drop line connector.

11. (Original) The solar power system of claim 6 wherein said feeder cable terminates in a feeder cable connector.

12. (Original) The solar power system of claim 6 wherein said first drop line includes 18 to 4 gauge wire.

13. (Original) The solar power system of claim 6 wherein said feeder cable includes 6 gauge to 1000MCM wire.

14. (**Currently Amended**) The solar power system of claim 6 wherein said first nexus is surrounded by **[[a]]** **<u>said</u>** compression lug.

15. (**Currently Cancelled**)

16. (**Currently Cancelled**)

17. (Previously Withdrawn) A method of constructing a solar power installation including the steps of:

A. Connecting a first plurality of solar panels to a first wire harness to form a first solar array;

B. Connecting said first wire harness to the first drop line of a lead assembly;

C. Connecting a second plurality of solar panels to a second wire harness to form a second solar array;

D. Connecting said second wire harness to the second drop line of said lead assembly; and

E. Electrically coupling said lead assembly to an inverter without electrically coupling to a combiner box.

18. (Previously Withdrawn) The method of claim 17 wherein said step of electrically coupling said lead assembly to an inverter includes the steps of electrically coupling a feeder cable to said inverter.

19. (Previously Added) The lead assembly of claim 1 wherein said undermold is injection molded.

20. (Previously Added) The lead assembly of claim 1 wherein said overmold is injection molded.

Voltage, LLC
EX1021-200

Remarks

Applicant gratefully acknowledges the Office Action dated 12/6/17. Upon considering the Office's cited art and remarks, and interviewing the case with Examiner Smith, claims **1**, 5, **6** and 14 have been amended, and claims 15 and 15 have been cancelled. Claims 4, 7, and 8 were previously cancelled, claims 17 and 18 were previously withdrawn, and claims 19 and 20 were previously added. Accordingly, claims **1**-3; 5; **6**; 9-14; 19 and 20 are currently pending, with no claims allowable at this time.

The Office's specific issues are addressed as follows:

I. 35 USC §112(a) Rejection of Claims 1-3, 5, 6, 9-16, 19 and 20 as failing to comply with the written description requirement

It is believed that all §112(a) issues are addressed by amending independent claims 1 and 6 to recite, in relevant part, "…~~in direct contact with~~ **surrounding** …".

II. 35 USC §112(b) Rejection of Claims 5 and 14-16 as being indefinite

It is believed that all §112(b) issues are addressed by correcting the antecedent basis in claims 5 and 14, and cancelling redundant claims 15 and 16.

III. 35 USC §103(b) Rejection of Claims 1-3, 5, 19 and 20 as obvious in view of Jonczyk, Avrutsky and Yamawaki

Independent claim 1 has been amended to recite, in relevant part:

> *"… said lead assembly has a voltage rating selected from the group consisting of 600 VDC, 1000 VDC, 1500 VDC and combinations thereof…"*

Yamawaki pertains to rooftop and residential type photovoltaic systems which don't incorporate combiner boxes. Accordingly, the Person Having Ordinary Skill In the Art ("PHOSITA") wouldn't to consult Yamawaki to solve the problem at

hand, which is a lead assembly that replaces the need for a combiner box. On this basis Yamawaki is improperly applied.

In addition, the rooftop and residential type photvoltaic systems of Yamawaki are configured to carry 30 – 45 amps, versus 400+ amps of the present invention. On this basis, also, the PHOSITA would not consult Yamawaki, and therefore Yamawaki should not have been applied.

Finally, should the lead assembly discussed in Jonczyk be combined with the undermold surrounded by an overmold discussed in Yamawaki, the resulting lead assembly would not have a voltage rating of 600 VDC / 1000 VDC /1500 VDC, as set forth in amended claim 1. MPEP § 2143.01(V) states "[i]f proposed modification would render the prior art invention being modified unsatisfactory for its intended purpose, then there is no suggestion or motivation to make the proposed modification. *In re Gordon*, 733 F.2d 900, 221 USPQ 1125 (Fed. Cir. 1984).

In the present case, the combination would be unable to handle the voltage, so the lead assembly would pose an electrocution and/or fire hazard.

As such, Applicant respectfully submits that a person of ordinary skill in the art would not have a reason to combine these features and that further, the combination thereof would frustrate the principle of operation of Jonczyk. Therefore, Applicant respectfully requests that the rejection be withdrawn and/or is overcome.

Applicant notes that the subject matter of the amendment, namely voltage ratings, is set forth in the originally filed specification at page 10, lines 16-17. Accordingly, no new matter has been added.

IV. <u>35 USC §103(b) Rejection of Claims 6, 9-12, 14-16 as obvious in view of Jonczyk, Avrutsky, Arai and Yamawaki</u>

Claim 6 is believed patentable over the combination of Jonczyk and Yamawaki for the reasons set forth in Section III above.

Voltage, LLC
EX1021-202

V. 35 USC §103(b) Rejection of Claim 13 as obvious in view of Jonczyk, Avrutsky, Arai and Yamawaki

This rejection is deemed moot in view of amended claim 6 overcoming Jonczyk and Yamawaki, as set forth in Sections III and IV above.

Conclusion

For the reasons set forth herein, Applicant believes all claims are allowable over the art of record.

Examiner Smith is earnestly encouraged to contact Attorney Gannon by telephone or email to resolve any outstanding issues, or to discuss claim amendments which would facilitate allowance.

Respectfully submitted,

/Carla L. Gannon, 56,358/

Carla L. Gannon
Registration No. 56,358
Carla Gannon Law
8903 E. Oak Island Dr.
Suite 9
Oak Island, NC 28465
336-543-3797
cgannon@carlagannonlaw.com

Date: June 6, 2018
File No.: SHOALS-59

Voltage, LLC
EX1021-203

Electronic Patent Application Fee Transmittal

Application Number:	14849458
Filing Date:	09-Sep-2015
Title of Invention:	LEAD ASSEMBLY FOR CONNECTING SOLAR PANEL ARRAYS TO INVERTER
First Named Inventor/Applicant Name:	Dean Solon
Filer:	Carla L. Gannon/Donna Braam
Attorney Docket Number:	SHOALS-59

Filed as Small Entity

Filing Fees for Utility under 35 USC 111(a)

Description	Fee Code	Quantity	Amount	Sub-Total in USD($)
Basic Filing:				
Pages:				
Claims:				
Miscellaneous-Filing:				
Petition:				
Patent-Appeals-and-Interference:				
Post-Allowance-and-Post-Issuance:				
Extension-of-Time:				

Description	Fee Code	Quantity	Amount	Sub-Total in USD($)
Extension - 3 months with $0 paid	2253	1	700	700
Miscellaneous:				
RCE- 1ST REQUEST	2801	1	650	650
		Total in USD ($)		**1350**

Electronic Acknowledgement Receipt

EFS ID:	32818476
Application Number:	14849458
International Application Number:	
Confirmation Number:	5067
Title of Invention:	LEAD ASSEMBLY FOR CONNECTING SOLAR PANEL ARRAYS TO INVERTER
First Named Inventor/Applicant Name:	Dean Solon
Customer Number:	57825
Filer:	Carla L. Gannon/Donna Braam
Filer Authorized By:	Carla L. Gannon
Attorney Docket Number:	SHOALS-59
Receipt Date:	06-JUN-2018
Filing Date:	09-SEP-2015
Time Stamp:	12:30:09
Application Type:	Utility under 35 USC 111(a)

Payment information:

Submitted with Payment	yes
Payment Type	CARD
Payment was successfully received in RAM	$1350
RAM confirmation Number	060618INTEFSW12355600
Deposit Account	
Authorized User	

The Director of the USPTO is hereby authorized to charge indicated fees and credit any overpayment as follows:

File Listing:

Document Number	Document Description	File Name	File Size(Bytes)/ Message Digest	Multi Part /.zip	Pages (if appl.)
1	Request for Continued Examination (RCE)	RCEtransmittal_SHOALS-59.pdf	1349892 dc36aa9de3197eb6277efa3d9e48f9edf4b5ff30	no	3
Warnings:					
Information:					
2	Response After Final Action	Response_120617FinalOfficeAction_SHOALS-59.pdf	50434 91c885bf561075c48bd31e941a669994d96ed433	no	9
Warnings:					
Information:					
3	Fee Worksheet (SB06)	fee-info.pdf	32277 f329f7d89c01cb25d942292a040e3b62368e4cc1	no	2
Warnings:					
Information:					
			Total Files Size (in bytes):	1432603	

This Acknowledgement Receipt evidences receipt on the noted date by the USPTO of the indicated documents, characterized by the applicant, and including page counts, where applicable. It serves as evidence of receipt similar to a Post Card, as described in MPEP 503.

<u>New Applications Under 35 U.S.C. 111</u>
If a new application is being filed and the application includes the necessary components for a filing date (see 37 CFR 1.53(b)-(d) and MPEP 506), a Filing Receipt (37 CFR 1.54) will be issued in due course and the date shown on this Acknowledgement Receipt will establish the filing date of the application.
<u>National Stage of an International Application under 35 U.S.C. 371</u>
If a timely submission to enter the national stage of an international application is compliant with the conditions of 35 U.S.C. 371 and other applicable requirements a Form PCT/DO/EO/903 indicating acceptance of the application as a national stage submission under 35 U.S.C. 371 will be issued in addition to the Filing Receipt, in due course.
<u>New International Application Filed with the USPTO as a Receiving Office</u>
If a new international application is being filed and the international application includes the necessary components for an international filing date (see PCT Article 11 and MPEP 1810), a Notification of the International Application Number and of the International Filing Date (Form PCT/RO/105) will be issued in due course, subject to prescriptions concerning national security, and the date shown on this Acknowledgement Receipt will establish the international filing date of the application.

PTO/SB/06 (09-11)
Approved for use through 1/31/2014. OMB 0651-0032
U.S. Patent and Trademark Office; U.S. DEPARTMENT OF COMMERCE
Under the Paperwork Reduction Act of 1995, no persons are required to respond to a collection of information unless it displays a valid OMB control number.

PATENT APPLICATION FEE DETERMINATION RECORD

Substitute for Form PTO-875

Application or Docket Number	Filing Date	
14/849,458	09/09/2015	☐ To be Mailed

ENTITY: ☐ LARGE ☒ SMALL ☐ MICRO

APPLICATION AS FILED – PART I

FOR	(Column 1) NUMBER FILED	(Column 2) NUMBER EXTRA	RATE ($)	FEE ($)
☐ BASIC FEE (37 CFR 1.16(a), (b), or (c))	N/A	N/A	N/A	
☐ SEARCH FEE (37 CFR 1.16(k), (i), or (m))	N/A	N/A	N/A	
☐ EXAMINATION FEE (37 CFR 1.16(o), (p), or (q))	N/A	N/A	N/A	
TOTAL CLAIMS (37 CFR 1.16(i))	minus 20 =	*	x $ =	
INDEPENDENT CLAIMS (37 CFR 1.16(h))	minus 3 =	*	x $ =	
☐ APPLICATION SIZE FEE (37 CFR 1.16(s))	If the specification and drawings exceed 100 sheets of paper, the application size fee due is $310 ($155 for small entity) for each additional 50 sheets or fraction thereof. See 35 U.S.C. 41(a)(1)(G) and 37 CFR 1.16(s).			
☐ MULTIPLE DEPENDENT CLAIM PRESENT (37 CFR 1.16(j))				
* If the difference in column 1 is less than zero, enter "0" in column 2.			TOTAL	

APPLICATION AS AMENDED – PART II

AMENDMENT 06/06/2018

	(Column 1) CLAIMS REMAINING AFTER AMENDMENT		(Column 2) HIGHEST NUMBER PREVIOUSLY PAID FOR	(Column 3) PRESENT EXTRA	RATE ($)	ADDITIONAL FEE ($)
Total (37 CFR 1.16(i))	* 15	Minus	** 20	= 0	x $50 =	0
Independent (37 CFR 1.16(h))	* 3	Minus	***3	= 0	x $230 =	0
☐ Application Size Fee (37 CFR 1.16(s))						
☐ FIRST PRESENTATION OF MULTIPLE DEPENDENT CLAIM (37 CFR 1.16(j))						
					TOTAL ADD'L FEE	0

AMENDMENT

	(Column 1) CLAIMS REMAINING AFTER AMENDMENT		(Column 2) HIGHEST NUMBER PREVIOUSLY PAID FOR	(Column 3) PRESENT EXTRA	RATE ($)	ADDITIONAL FEE ($)
Total (37 CFR 1.16(i))	*	Minus	**	=	x $ =	
Independent (37 CFR 1.16(h))	*	Minus	***	=	x $ =	
☐ Application Size Fee (37 CFR 1.16(s))						
☐ FIRST PRESENTATION OF MULTIPLE DEPENDENT CLAIM (37 CFR 1.16(j))						
					TOTAL ADD'L FEE	

* If the entry in column 1 is less than the entry in column 2, write "0" in column 3.
** If the "Highest Number Previously Paid For" IN THIS SPACE is less than 20, enter "20".
*** If the "Highest Number Previously Paid For" IN THIS SPACE is less than 3, enter "3".
The "Highest Number Previously Paid For" (Total or Independent) is the highest number found in the appropriate box in column 1.

LIE
PAMELA V. THERATT

This collection of information is required by 37 CFR 1.16. The information is required to obtain or retain a benefit by the public which is to file (and by the USPTO to process) an application. Confidentiality is governed by 35 U.S.C. 122 and 37 CFR 1.14. This collection is estimated to take 12 minutes to complete, including gathering, preparing, and submitting the completed application form to the USPTO. Time will vary depending upon the individual case. Any comments on the amount of time you require to complete this form and/or suggestions for reducing this burden, should be sent to the Chief Information Officer, U.S. Patent and Trademark Office, U.S. Department of Commerce, P.O. Box 1450, Alexandria, VA 22313-1450. DO NOT SEND FEES OR COMPLETED FORMS TO THIS ADDRESS. **SEND TO: Commissioner for Patents, P.O. Box 1450, Alexandria, VA 22313-1450.**
If you need assistance in completing the form, call 1-800-PTO-9199 and select option 2.

Search Notes	Application/Control No.	Applicant(s)/Patent Under Reexamination
	14/849,458	Solon, Dean
	Examiner	**Art Unit**
	ERIC R SMITH	1757

CPC - Searched*		
Symbol	**Date**	**Examiner**
H01L31/0422,0424,0482,0484,05	1/16/2014	ERS
E04D3/40	1/17/2014	ERS
H01L31/02013,02008,02021	7/1/2014	ERS
H02S40/00-38	5/23/2014	ERS
H01R4/187,18,70	11/30/2017	ERS

CPC Combination Sets - Searched*		
Symbol	**Date**	**Examiner**

US Classification - Searched*			
Class	**Subclass**	**Date**	**Examiner**
52	173.3	7/16/2013	ERS
136	243-265	7/16/2013	ERS

* See search history printout included with this form or the SEARCH NOTES box below to determine the scope of the search.

Search Notes		
Search Notes	**Date**	**Examiner**
Keyword search in USPC subclasses, CPC subgroups, IPC subgroups (see EAST history for search strategy)	5/23/2017	ERS
Inventor search in DAV	5/24/2017	ERS
Keyword search in CPC subgroups (see EAST history for search strategy)	11/30/2017	ERS
Update inventor search in DAV	11/30/2017	ERS

Voltage 116
EX1021-209

Search Notes	Application/Control No.	Applicant(s)/Patent Under Reexamination
	14/849,458	Solon, Dean
	Examiner	**Art Unit**
	ERIC R SMITH	1757

Interference Search			
US Class/CPC Symbol	**US Subclass/CPC Group**	**Date**	**Examiner**

Voltage 116
EX1021-210

EAST Search History

EAST Search History (Prior Art)

Ref #	Hits	Search Query	DBs	Default Operator	Plurals	Time Stamp
L5	918	h01r4/187.cpc.	US-PGPUB; USPAT; USOCR; FPRS	AND	ON	2017/11/30 09:19
L6	6468	h01r4/187,18,70.cpc.	US-PGPUB; USPAT; USOCR; FPRS	AND	ON	2017/11/30 09:24
L7	1454	h01r9/03.cpc.	US-PGPUB; USPAT; USOCR; FPRS	AND	ON	2017/11/30 09:25
L8	7884	l6 or l7	US-PGPUB; USPAT; USOCR; FPRS	AND	ON	2017/11/30 09:25
L9	3	l8 and "compression lug"	US-PGPUB; USPAT; USOCR; FPRS	AND	ON	2017/11/30 09:30
S409	55	(undermold$3 and overmold$3)	US-PGPUB; USPAT	AND	ON	2017/11/29 11:45

EAST Search History (Interference)

<This search history is empty>

11/30/2017 4:04:25 PM
C:\Users\esmith3\Documents\EAST\Workspaces\Grid_interconnects_specifics\14849458_lead_assembly.wsp

Notice of References Cited	Application/Control No. 14/849,458	Applicant(s)/Patent Under Reexamination Solon, Dean	
	Examiner ERIC R SMITH	Art Unit 1757	Page 1 of 1

U.S. PATENT DOCUMENTS

*		Document Number Country Code-Number-Kind Code	Date MM-YYYY	Name	CPC Classification	US Classification
*	A	US-20120085040-A1	04-2012	KETWITZ, JR.; RONALD	H01L31/05	52/173.3
*	B	US-6268559-B1	07-2001	Yamawaki; Takeharu	G05F1/62	136/243
	C					
	D					
	E					
	F					
	G					
	H					
	I					
	J					
	K					
	L					
	M					

FOREIGN PATENT DOCUMENTS

*		Document Number Country Code-Number-Kind Code	Date MM-YYYY	Country	Name	CPC Classification
	N					
	O					
	P					
	Q					
	R					
	S					
	T					

NON-PATENT DOCUMENTS

*		Include as applicable: Author, Title Date, Publisher, Edition or Volume, Pertinent Pages)
	U	
	V	
	W	
	X	

*A copy of this reference is not being furnished with this Office action. (See MPEP § 707.05(a).)
Dates in MM-YYYY format are publication dates. Classifications may be US or foreign.

Voltage, LLC
EX1021-212

UNITED STATES PATENT AND TRADEMARK OFFICE

UNITED STATES DEPARTMENT OF COMMERCE
United States Patent and Trademark Office
Address: COMMISSIONER FOR PATENTS
P.O. Box 1450
Alexandria, Virginia 22313-1450
www.uspto.gov

APPLICATION NO.	FILING DATE	FIRST NAMED INVENTOR	ATTORNEY DOCKET NO.	CONFIRMATION NO.
14/849,458	09/09/2015	Dean Solon	SHOALS-59	5067

57825 7590 12/06/2017
CARLA GANNON LAW
Carla L. Gannon, Esq.
8903 E. Oak Island Dr.
Suite 9
Oak Island, NC 28465

EXAMINER
SMITH, ERIC R

ART UNIT	PAPER NUMBER
1757	

NOTIFICATION DATE	DELIVERY MODE
12/06/2017	ELECTRONIC

Please find below and/or attached an Office communication concerning this application or proceeding.

The time period for reply, if any, is set in the attached communication.

Notice of the Office communication was sent electronically on above-indicated "Notification Date" to the following e-mail address(es):

cgannon@carlagannonlaw.com
carlagannon@yahoo.com
docketing@carlagannonlaw.com

Office Action Summary	Application No. 14/849,458	Applicant(s) Solon, Dean	
	Examiner ERIC R SMITH	Art Unit 1757	AIA Status Yes

-- The MAILING DATE of this communication appears on the cover sheet with the correspondence address --

Period for Reply

A SHORTENED STATUTORY PERIOD FOR REPLY IS SET TO EXPIRE 3 MONTHS FROM THE MAILING DATE OF THIS COMMUNICATION.

- Extensions of time may be available under the provisions of 37 CFR 1.136(a). In no event, however, may a reply be timely filed after SIX (6) MONTHS from the mailing date of this communication.
- If NO period for reply is specified above, the maximum statutory period will apply and will expire SIX (6) MONTHS from the mailing date of this communication.
- Failure to reply within the set or extended period for reply will, by statute, cause the application to become ABANDONED (35 U.S.C. § 133). Any reply received by the Office later than three months after the mailing date of this communication, even if timely filed, may reduce any earned patent term adjustment. See 37 CFR 1.704(b).

Status

1)☑ Responsive to communication(s) filed on 9/1/2017 .

☐ A declaration(s)/affidavit(s) under **37 CFR 1.130(b)** was/were filed on _____ .

2a)☑ This action is **FINAL.** 2b) ☐ This action is non-final.

3)☐ An election was made by the applicant in response to a restriction requirement set forth during the interview on _____; the restriction requirement and election have been incorporated into this action.

4)☐ Since this application is in condition for allowance except for formal matters, prosecution as to the merits is closed in accordance with the practice under *Ex parte Quayle*, 1935 C.D. 11, 453 O.G. 213.

Disposition of Claims*

5)☑ Claim(s) 1-3,5-6 and 9-20 is/are pending in the application.

5a) Of the above claim(s) 17-18 is/are withdrawn from consideration.

6)☐ Claim(s) _____ is/are allowed.

7)☑ Claim(s) 1-3,5-6,9-16 and 19-20 is/are rejected.

8)☐ Claim(s) _____ is/are objected to.

9)☐ Claim(s) _____ are subject to restriction and/or election requirement.

* If any claims have been determined allowable, you may be eligible to benefit from the **Patent Prosecution Highway** program at a participating intellectual property office for the corresponding application. For more information, please see http://www.uspto.gov/patents/init_events/pph/index.jsp or send an inquiry to **PPHfeedback@uspto.gov.**

Application Papers

10)☐ The specification is objected to by the Examiner.

11)☐ The drawing(s) filed on _____ is/are: a)☐ accepted or b)☐ objected to by the Examiner.

Applicant may not request that any objection to the drawing(s) be held in abeyance. See 37 CFR 1.85(a).

Replacement drawing sheet(s) including the correction is required if the drawing(s) is objected to. See 37 CFR 1.121(d).

Priority under 35 U.S.C. § 119

12)☐ Acknowledgment is made of a claim for foreign priority under 35 U.S.C. § 119(a)-(d) or (f).

Certified copies:

a)☐ All b)☐ Some** c)☐ None of the:

1.☐ Certified copies of the priority documents have been received.

2.☐ Certified copies of the priority documents have been received in Application No. _____ .

3.☐ Copies of the certified copies of the priority documents have been received in this National Stage application from the International Bureau (PCT Rule 17.2(a)).

** See the attached detailed Office action for a list of the certified copies not received.

Attachment(s)

1) ☑ Notice of References Cited (PTO-892)

2) ☐ Information Disclosure Statement(s) (PTO/SB/08a and/or PTO/SB/08b) Paper No(s)/Mail Date _____ .

3) ☐ Interview Summary (PTO-413) Paper No(s)/Mail Date _____ .

4) ☐ Other: _____ .

Voltage, LLC
EX1021-214

The present application, filed on or after March 16, 2013, is being examined under the first inventor to file provisions of the AIA.

DETAILED ACTION

Response to Amendment

The amendment filed 9/1/2017 does not place the application in condition for allowance.

The rejections over 35 U.S.C. 112(b) are withdrawn due to Applicant's amendment.

The previous art rejections are withdrawn due to Applicant's amendment.

New rejections follow.

Claim Interpretation

The examiner notes that claim 1 recites the phrase "a means for securing said nexus". In some circumstances, use of the word "means" (or "step for") in a claim with functional language creates a rebuttable presumption that the claim element is to be treated in accordance with 35 U.S.C. 112(f) (pre-AIA 35 U.S.C. 112, sixth paragraph). The presumption that 35 U.S.C. 112(f) (pre-AIA 35 U.S.C. 112, sixth paragraph) is invoked is rebutted when the function is recited with sufficient structure, material, or acts within the claim itself to entirely perform the recited function. The phrase is immediately followed by a Markush group of potential structural elements or product-by-process limitations which would fulfill such means. Therefore the phrase is not interpreted to be an invocation of 35 U.S.C. 112(f) (pre-AIA 35 U.S.C. 112, sixth paragraph), as the Markush group recites sufficient structure, materials or acts to perform the recited function. Further, the examiner notes that the discussion of such means at the bottom of page 9 of the instant specification is no narrower in scope than the Markush group. For more information, see MPEP § 2173 *et seq.* and *Supplementary Examination Guidelines for Determining*

Compliance With 35 U.S.C. 112 and for Treatment of Related Issues in Patent Applications, 76 FR 7162, 7167 (Feb. 9, 2011).

Claim Rejections - 35 USC § 112

The following is a quotation of the first paragraph of 35 U.S.C. 112(a):

> (a) IN GENERAL.—The specification shall contain a written description of the invention, and of the manner and process of making and using it, in such full, clear, concise, and exact terms as to enable any person skilled in the art to which it pertains, or with which it is most nearly connected, to make and use the same, and shall set forth the best mode contemplated by the inventor or joint inventor of carrying out the invention.

The following is a quotation of the first paragraph of pre-AIA 35 U.S.C. 112:

> The specification shall contain a written description of the invention, and of the manner and process of making and using it, in such full, clear, concise, and exact terms as to enable any person skilled in the art to which it pertains, or with which it is most nearly connected, to make and use the same, and shall set forth the best mode contemplated by the inventor of carrying out his invention.

Claims 1-3, 5, 6, 9-16, 19, and 20 rejected under 35 U.S.C. 112(a) or 35 U.S.C. 112 (pre-AIA), first paragraph, as failing to comply with the written description requirement. The claim(s) contains subject matter which was not described in the specification in such a way as to reasonably convey to one skilled in the relevant art that the inventor or a joint inventor, or for pre-AIA the inventor(s), at the time the application was filed, had possession of the claimed invention.

Claims 1 and 6 recite that the inner surface of the undermold is in direct contact with the securing means/compression lug. This limitation is not supported by the disclosure as originally filed. Figure 35 of the instant drawings, for instance shows a connection between the securing means/compression lug 20 at the nexus of the feeder cable 14 and first drop line 12. Figures 33 and 51 show the relationship of an undermold 22 and the nexus. While there is support for the inner surface of the undermold surrounding the securing means/compression lug, there is not enough detail in the

disclosure to support the undermold being in direct contact with the securing means/compression lug. There is no Figure which specifically shows contact between those elements. Figure 7 shows a joint 17 with a shaded overlay, but there is no connection made in the disclosure between the shaded overlay and an element analogous to the claimed undermold, or any reference made to what the overlay represents at all.

Further, page 9, lines 28-30 of the specification recite that the undermold "has been applied by injection molding". The examiner does not interpret this phrase to support that the undermold was injection molded directly at the nexus, *in situ*. A person having ordinary skill in the art would understand that, even if *in situ* formation of the undermold at the nexus comprising the securing means/compression lug were able to be assumed, that assumption is not sufficient to support the claimed direct contact between elements. For instance, disparate expansion/contraction of those elements may lead to the securing means/compression lug not being in direct contact, or such expansion/contraction may be mitigated. See ¶0090 of US PGPub 2010/0258157 of Arai, ¶0023, 0025, 0044 of US PGPub 2012/0085040 to Ketwitz. Other interpretations of "has been applied by injection molding" encompass the undermold being molded separately from the nexus and applied over the nexus afterward.

Regardless, a person having ordinary skill in the art would not be apprised from the originally-filed disclosure that the inner surface of the undermold and the securing means/compression lug are in direct contact. **Claims 2, 3, 5, 19, and 20** are rejected based on their dependence from claim 1. **Claims 9-16** are rejected based on their dependence from claim 6.

The following is a quotation of 35 U.S.C. 112(b):

> (b) CONCLUSION.—The specification shall conclude with one or more claims particularly pointing out and distinctly claiming the subject matter which the inventor or a joint inventor regards as the invention.

The following is a quotation of 35 U.S.C. 112 (pre-AIA), second paragraph:
The specification shall conclude with one or more claims particularly pointing out and distinctly claiming the subject matter which the applicant regards as his invention.

Claims 5 and 14-16 rejected under 35 U.S.C. 112(b) or 35 U.S.C. 112 (pre-AIA), second paragraph, as being indefinite for failing to particularly point out and distinctly claim the subject matter which the inventor or a joint inventor, or for pre-AIA the applicant regards as the invention.

Claim 5 depends from cancelled claim 4, therefore its scope cannot be determined. For the purposes of examination, the claim will be assumed to depend from claim 1.

Claim 14 recites that the first nexus is surrounded by a compression lug. A compression lug was previously claimed in claim 6, from which claim 14 depends. It is unclear if this is a reference to the previously claimed compression lug or if it is intended to be a new element. If the latter is intended, it is unclear from the disclosure how the first nexus can be surrounded by distinct compression lugs, as all embodiments, such as that of Figure 35 of the Drawings, show only a single compression lug surrounding the nexus. **Claims 15 and 16** are also rejected based on their dependence from claim 14.

Claim 15 recites that the compression lug is surrounded by an undermold. It is unclear if "the compression lug" is the one recited in claim 6 or the potentially newly recited compression lug of claim 14. Further, claim 6 already recites that the compression lug is surrounded by an undermold, therefore it is unclear if the undermold of claim 15 is a reference to that previously recited or a distinct undermold. Further, if the latter is intended, it is unclear from the disclosure how a compression lug may be surrounded by two distinct undermolds, as only a single undermold is disclosed in the relevant embodiments such as that of Fig. 33.

Claim 16 recites that the undermold is surrounded by an overmold. It is unclear if "the undermold" is the one recited in claim 6 or the potentially newly recited undermold of claim 15. Further, claim 6 already recites that the undermold is surrounded by an overmold, therefore it is unclear if the

overmold of claim 16 is a reference to that previously recited or a distinct overmold. Further, if the latter is intended, it is unclear from the disclosure how an undermold may be surrounded by two distinct overmolds, as only a single overmold is disclosed in the relevant embodiments such as that of Fig. 54.

Claim Rejections - 35 USC § 103

The text of those sections of Title 35, U.S. Code not included in this action can be found in a prior Office action.

Claims 1-3, 5, 19, and 20 is/are rejected under 35 U.S.C. 103 as being unpatentable over US PGPub 2010/0139733 to Jonczyk (of record), and further in view of US PGPub 2012/0217973 to Avrutsky (of record), and US Patent 6,268,559 to Yamawaki.

Regarding claim 1-3, 5, 19, and 20, Jonczyk teaches a lead assembly including

A. a first drop line 56 and a second drop line 58, the first drop line terminating in a drop line connector 66 (Figs. 2, 3, ¶0025, 0026, 0029, 0030)

B. at least one feeder cable (analogous element 52 terminating in a feeder cable connector 74, the first drop line 56 and the at least one feeder cable electrically coupled at a nexus (the two cables physically meet at a nexus coincident with the cutout 4 in Fig. 3, ¶0027, 0031, 0032)

C. a means for securing the nexus, the securing means being crimping (element 32 is a crimp barrel, Fig. 4)

D. A mold 82 having an inner surface and an outer surface, the inner surface in direct contact with and fully encasing the securing means 32.

Jonczyk does not teach that the mold 82 is an undermold, with the undermold surrounded by an overmold and forming an overmold-undermold interface only at the outer surface. Yamawaki also teaches a mold (element 33e of Figs. 9) within which a nexus is formed between cables and lines (31),

which is an undermold having an outer surface (partially exposed in Fig. 9B) is surrounded by an overmold (33f), forming an undermold-overmold interface at the outer surface (Fig. 9B shows that the lower edge portion of 33f extending in the thickness direction of that element exposed by the cutaway precisely intersects with the edge of the exposed face of 33e, thus showing that an outer surface of the undermold forms an interface with the overmold), so that the overmold may improve water resistance of the junction between cables and lines (C10/L17-24, C10/L33-49, C3/L6-18). Therefore it would have been obvious as of the effective filing date of the claimed invention for a person having ordinary skill in the art to form an overmold over the undermold of Jonczyk, so that the undermold is surrounded by the overmold and forms an undermold-overmold interface only at the outer surface in order to improve water resistance of the connection between the first drop line and feeder cable.

The claim is drawn to a lead assembly. The limitations of the preamble that the lead assembly is for use in a solar energy installation, and that the lead assembly combines power from a plurality of solar arrays and transmits that power to an inverter in a solar energy installation lacking a combiner box between the solar arrays and the inverter are intended use limitation. Intended use limitations are given weight to the extent that the prior art structure is capable of performing the intended use. See MPEP § 2111.02, 2112.01 and 2114-2115. The examiner interprets the lead assembly of modified-Jonczyk to necessarily be capable of performing those intended uses, as the lead assembly has the recited structure. Where the claimed and prior art products are identical or substantially identical in structure or composition, or are produced by identical or substantially identical processes, a *prima facie* case of either anticipation or obviousness has been established. *In re Best,* 562 F.2d 1252, 1255, 195 USPQ 430, 433 (CCPA 1977). "When the PTO shows a sound basis for believing that the products of the applicant and the prior art are the same, the applicant has the burden of showing that they are not." *In re Spada,*

911 F.2d 705, 709, 15 USPQ2d 1655, 1658 (Fed. Cir. 1990). Further, Jonczyk teaches that such a lead assembly is capable of performing several of those intended uses (Fig. 12, ¶0040).

In the event that the intended use limitations can be shown to define the structure or properties of the claimed assembly, Jonczyk teaches that such a lead assembly is capable of being used in a solar energy installation 240, to combine power from a plurality of solar arrays 242 and transmit the power to an inverter. Avrutsky teaches a similar installation (element 100 of Fig. 1) with an analogous lead assembly (105), and teaches that such an installation may comprise a combiner box (106) between a plurality of solar arrays and an inverter (103), or that such a combiner box may alternatively be omitted ("the string bus 105 can be connected to the inverter 105 directly or as a part of a mesh network or combiner boxes or fuse boxes", ¶0028, 0029). The omission of an element and its function is obvious if the function of the element is not desired. MPEP §2144.04.II. Therefore it would have been obvious to a person having ordinary skill in the art as of the effective filing date of the claimed invention that the claimed lead assembly could be used in a solar energy installation lacking a combiner box between solar arrays and the inverter, as Avrutsky teaches that a combiner box may be omitted if desired.

Per claims 2 and 3, modified-Jonczyk teaches the limitations of claim 1. Jonczyk teaches that the first drop line 56 and the at least one feeder cable 52 each include a section of exposed wire at the nexus (Fig.4, ¶0032).

Per claim 5, modified-Jonczyk teaches the limitations of claim 1. Yamawaki teaches that the overmold (33f) of that invention defines apertures (at 33a, 33b, 33c) which allow cables and lines access to the nexus within (Figs. 9, C10/L62-C11/L2). Since Yamawaki and Jonczyk share the features of cables and lines which require access to the nexus, a skilled artisan would form the overmold to define at least one aperture in order to allow cables and lines to access the nexus.

Per claims 19 and 20, modified-Jonczyk teaches the limitations of claim 1. The limitations that the undermold and overmold are injection molded are product-by-process limitations. The patentability of a product does not depend on its method of production. If the product in the product-by-process claim is the same as or obvious from a product of the prior art, the claim is unpatentable even though the prior product was made by a different process." *In re Thorpe,* 777 F.2d 695, 698, 227 USPQ 964, 966 (Fed. Cir. 1985). MPEP §2113.I. The combination of references teaches the structure of the claimed undermold and overmold.

Claims 6, 9-12, and 14-16 is/are rejected under 35 U.S.C. 103 as being unpatentable over Jonczyk, and further in view of Avrutsky, US PGPub 2010/0258157 to Arai (of record), and Yamawaki.

Regarding claim 6, 9-12, and 14, Jonczyk teaches a solar power system comprising

A. A first plurality of solar panels 244 (e. g. top left element 242 in Fig. 12) electrically coupled to form a first solar array (¶0039, 0040)

B. A second plural of solar panels 244 (e. g. element 242 below the top left element 242) electrically coupled to form a second solar array

C. A lead assembly 190 including a first drop line (analogous element 56 of Figs. 2, 3) electrically connected to first solar array, and a feeder cable (analogous element 52) electrically connected to an inverter 254, the first drop line and the feeder cable electrically connected at a first nexus (the two cables physically meet at a nexus coincident with the cutout 4 in Fig. 3, ¶0025-0032)

D. A second drop line (analogous element 58) electrically connected to the second solar array, the second drop line electrically connected to the feeder cable at a second nexus (overlapping with element 84).

Jonczyk teaches a combiner box 252 between the solar arrays and the inverter. Avrutsky teaches a similar system (element 100 of Fig. 1) with an analogous lead assembly (105), and teaches that such an installation may comprise a combiner box (106) between a plurality of solar arrays and an inverter (103), or that such a combiner box may alternatively be omitted ("the string bus 105 can be connected to the inverter 105 directly or as a part of a mesh network or combiner boxes or fuse boxes", ¶0028, 0029). The omission of an element and its function is obvious if the function of the element is not desired. MPEP §2144.04.II. Therefore it would have been obvious to a person having ordinary skill in the art as of the effective filing date of the claimed invention that the claimed lead assembly could be used in a solar energy installation lacking a combiner box between solar arrays and the inverter, as Avrutsky teaches that a combiner box may be omitted if desired. As such, the system of modified-Jonczyk would not include a combiner box upstream of the inverter.

Jonczyk teaches that the solar panels of the first and second solar arrays are part of an electrical circuit, but does not specifically teach that they are coupled by a first and second wire harness, respectively. Arai teaches that such a circuit of solar panels can be coupled by a wire harness (Fig. 10, ¶0009, 0078-0081). The combination of familiar elements is likely to be obvious when it does no more than yield predictable results. See *KSR International Co. v. Teleflex Inc.*, 550 U.S. 398, 415-421, 82 USPQ2d 1385, 1395 – 97 (2007) (see MPEP § 2143, A.). Therefore it would have been obvious as of the effective filing date to electrically couple the first (second) plurality of solar panels by a first (second) wire harness to form the first (second) solar array because such an element is commonly used to form arrays. Further, a person having ordinary skill in the art would appreciate that the first (second) drop line should be electrically connected to the first (second) wire harness in order to provide the electrical connection of the arrays to the inverter of modified-Jonczyk, as Arai teaches that such harnesses are used in that way.

The limitation that the first nexus is secured by a compression lug is interpreted in light of the instant disclosure. Figure 36 of the drawings shows a compression lug, with the form of a cylinder. Figures 35 and 37, and the bottom of page 9 of the specification, describe how the lug fits around the feeder cable and drop line, such that the lug holds the line and cable in contact. Figure 7 also shows an interaction between a lug, drop line, and feeder cable. A person having ordinary skill in the art would appreciate that an element analogous to element 32 of Fig. 4 of Jonczyk, having the form of a cylinder (compare Figs. 2, and 4, which show that element 32 has a rectangular profile in a top-down view and a circular profile in a cross-sectional view) surrounds the nexus and holds the exposed portions of the line and cable in contact (¶0032). Therefor a person having ordinary skill in the art would appreciate that the first nexus of Jonczyk is secured by a compression lug.

Jonczyk teaches that the compression lug 32 securing the first nexus establishes conductive contact between the feeder cable and first drop line, and that the compression lug and nexus is surrounded by a mold 82 having an inner surface and an outer surface, the inner surface in direct contact with and fully encasing the compression lug (Figs. 3, 4, ¶0031), but does not teach that the mold is an undermold, with the undermold surrounded by an overmold and forming an overmold-undermold interface only at the outer surface.

Yamawaki also teaches a mold (element 33e of Figs. 9) within which a nexus is formed between cables and lines (31), which is an undermold having an outer surface (partially exposed in Fig. 9B) is surrounded by an overmold (33f), forming an undermold-overmold interface at the outer surface (Fig. 9B shows that the lower edge portion of 33f extending in the thickness direction of that element exposed by the cutaway precisely intersects with the edge of the exposed face of 33e, thus showing that an outer surface of the undermold forms an interface with the overmold), so that the overmold may improve water resistance of the junction between cables and lines (C10/L17-24, C10/L33-49, C13/L6-

18). Therefore it would have been obvious as of the effective filing date of the claimed invention for a person having ordinary skill in the art to form an overmold over the undermold of Jonczyk, so that the undermold is surrounded by the overmold and forms an undermold-overmold interface only at the outer surface in order to improve water resistance of the connection between the first drop line and feeder cable.

Per claim 9, modified-Jonczyk teaches the limitations of claim 6. Jonczyk teaches that the lead assembly 190 includes an end piece (analogous element 74 of Fig.2, ¶0030).

Per claim 10, modified-Jonczyk teaches the limitations of claim 6. Jonczyk teaches that the first drop line terminates in a drop line connector (analogous element 66 of Fig. 2, ¶0028).

Per claim 11, modified-Jonczyk teaches the limitations of claim 6. Jonczyk teaches that the feeder cable terminates in a feeder cable connector (analogous element 162 in Fig. 7, ¶0034).

Per claim 12, modified-Jonczyk teaches the limitations of claim 6. Jonczyk teaches that the first drop line (described as being formed of secondary conductor in ¶0028) may be include 10 gauge or 12 gauge wire (¶0025). This is interpreted to be within the range "18 to 4 gauge wire". In the case where the claimed ranges “overlap or lie inside ranges disclosed by the prior art” a *prima facie* case of obviousness exists. *In re Wertheim,* 541 F.2d 257, 191 USPQ 90 (CCPA 1976); *In re Woodruff,* 919 F.2d 1575, 16 USPQ2d 1934 (Fed. Cir. 1990). MPEP §2144.05.

Per claims 14-16, modified-Jonczyk teaches the limitations of claim 6. Jonczyk teaches that the compression lug 32 surrounds the first nexus (see previously cited passages, Figs., and reasoning). Jonczyk teaches that the compression lug 32 is surrounded by mold 82, which can be formed as an undermold according to the reasoning above. The undermold of modified-Jonczyk is surrounded by an overmold, as reasoned above.

Claim 13 is/are rejected under 35 U.S.C. 103 as being unpatentable over Jonczyk, , Avrutsky, Arai, and Yamawaki as applied to claim 6 above, and further in view of US PGPub 2013/0269746 to Ramsey (of record). Supporting information is provided by US PGPub 2009/0300909 to Kummer and US PGPub 2011/0174521 to Hernandez (both of record).

Regarding claim 13, modified-Jonczyk teaches the limitations of claim 6. The limitation that the feeder cable includes 6 gauge to 1000MCM wire is interpreted according to ¶0023 of Kummer and Table 1 of Hernandez, which teaches that a 6 gauge wire has a diameter of 4.53 mm (at a particular temperature), and that 1000 MCM wire has diameter of 28.39 mm. Jonczyk teaches that the feeder cable (described as being formed of primary conductor in ¶0028) may be include 8 gauge wire (¶0025).

Ramsey, however, teaches that a gauge of wire can be varied according to the current being carried on the wire (¶0005, 0008, 0009, 0025). Therefore it would have been obvious to vary the size of the wire that forms the feeder cable according to the current being carried on the wire. The court has held that absent evidence of criticality or unexpected results, optimization of a result effective variable will not support the patentability of subject matter encompassed by the prior art. "[W]here the general conditions of a claim are disclosed in the prior art, it is not inventive to discover the optimum or workable ranges by routine experimentation." See *In re Aller,* 220 F.2d 454, 456, 105 USPQ 233, 235 (CCPA 1955). See also MPEP §2144.05.

Response to Arguments

Applicant's arguments with respect to claims 1-3, 5, 6, 9-16, 19, and 20 have been considered but are moot because the arguments do not apply to the current grounds of rejection.

Applicant argues that the new limitation requiring the inner surface of the undermold to be in direct contact with the securing means or compression lug finds support in the disclosure as originally filed. The examiner disagrees based on the following reasoning.

Figure 35 of the instant drawings, for instance shows a connection between the securing means/compression lug 20 at the nexus of the feeder cable 14 and first drop line 12. Figures 33 and 51 show the relationship of an undermold 22 and the nexus. While there is support for the inner surface of the undermold surrounding the securing means/compression lug, there is not enough detail in the disclosure to support the undermold being in direct contact with the securing means/compression lug. There is no Figure which specifically shows contact between those elements. Figure 7 shows a joint 17 with a shaded overlay, but there is no connection made in the disclosure between the shaded overlay and an element analogous to the claimed undermold, or any reference made to what the overlay represents at all.

Further, page 9, lines 28-30 of the specification recite that the undermold "has been applied by injection molding". The examiner does not interpret this phrase to support that the undermold was injection molded directly at the nexus, *in situ*. A person having ordinary skill in the art would understand that, even if *in situ* formation of the undermold at the nexus comprising the securing means/compression lug were able to be assumed, that assumption is not sufficient to support the claimed direct contact between elements. For instance, disparate expansion/contraction of those elements may lead to the securing means/compression lug not being in direct contact, or such expansion/contraction may be mitigated. See ¶0090 of US PGPub 2010/0258157 of Arai, ¶0023, 0025, 0044 of US PGPub 2012/0085040 to Ketwitz. Other interpretations of "has been applied by injection molding" encompass the undermold being molded separately from the nexus and applied over the nexus afterward.

Applicant has provided insufficient evidence to confirm that injection molding of the undermold, done *in situ* or otherwise, would necessarily result in the claimed direct contact.

Conclusion

Applicant's amendment necessitated the new ground(s) of rejection presented in this Office action. Accordingly, **THIS ACTION IS MADE FINAL**. See MPEP § 706.07(a). Applicant is reminded of the extension of time policy as set forth in 37 CFR 1.136(a).

A shortened statutory period for reply to this final action is set to expire THREE MONTHS from the mailing date of this action. In the event a first reply is filed within TWO MONTHS of the mailing date of this final action and the advisory action is not mailed until after the end of the THREE-MONTH shortened statutory period, then the shortened statutory period will expire on the date the advisory action is mailed, and any extension fee pursuant to 37 CFR 1.136(a) will be calculated from the mailing date of the advisory action. In no event, however, will the statutory period for reply expire later than SIX MONTHS from the date of this final action.

Any inquiry concerning this communication or earlier communications from the examiner should be directed to ERIC R SMITH whose telephone number is (571)270-7186. The examiner can normally be reached on M-F, 8:30am-5:30pm MST.

Examiner interviews are available via telephone, in-person, and video conferencing using a USPTO supplied web-based collaboration tool. To schedule an interview, applicant is encouraged to use the USPTO Automated Interview Request (AIR) at http://www.uspto.gov/interviewpractice.

If attempts to reach the examiner by telephone are unsuccessful, the examiner's supervisor, Jeffrey Barton can be reached on (571) 272-1307. The fax phone number for the organization where this application or proceeding is assigned is 571-273-8300.

Information regarding the status of an application may be obtained from the Patent Application Information Retrieval (PAIR) system. Status information for published applications may be obtained from either Private PAIR or Public PAIR. Status information for unpublished applications is available through Private PAIR only. For more information about the PAIR system, see http://pair-direct.uspto.gov. Should you have questions on access to the Private PAIR system, contact the Electronic Business Center (EBC) at 866-217-9197 (toll-free). If you would like assistance from a USPTO Customer Service Representative or access to the automated information system, call 800-786-9199 (IN USA OR CANADA) or 571-272-1000.

ERIC R. SMITH
Primary Examiner
Art Unit 1757

/ERIC R SMITH/
Primary Examiner, Art Unit 1757

IN THE UNITED STATES PATENT AND TRADEMARK OFFICE

In re Application of: Dean Solon
Serial No.: 14/849,458 **Examiner:** SMITH, ERIC R.
Filed: 09/09/2015 **Art Unit:** 2833
Confirmation No.: 5067
For: LEAD ASSEMBLY FOR CONNECTING SOLAR PANEL ARRAYS TO INVERTER

Commissioner for Patents
PO Box 1450
Alexandria, VA 22313-1450

Sir:

AUTHORIZATION TO COMMUNICATE VIA THE INTERNET AND PRE-INTERVIEW COMMUNICATION

Recognizing that internet communications are not secure, I hereby authorize the USPTO to communicate with the undersigned in accordance with 37 CFR §1.33 and 37 CFR §1.34 concerning any subject matter of this application by video conferencing, instant messaging, or electronic mail. I understand that a copy of these communications will be made of record in the application file.

Applicant's representative wishes to discuss the following items in the telephonic interview scheduled for Thursday, August 31 at 1:00 EST, 11:00 MST. This interview is in connection with the Non-Final Office Action dated 5/30/17.

Voltage, LLC
EX1021-230

PROPOSED CLAIM AMENDMENTS

1. **(PROPOSED)** A lead assembly for use in a solar energy installation including:

A. A first drop line and a second drop line, said first drop line terminating in a drop line connector;

B. At least one feeder cable terminating in a feeder cable connector, said first drop line and said at least one feeder cable electrically coupled at a nexus;

C. A means for securing said nexus, said securing means selected from the group consisting of compression lug, soldering, splicing, crimping, and combinations thereof; ~~**and**~~

D. **An injection molded undermold having an inner surface and an outer surface, said inner surface in direct contact with and fully encasing said securing means; and**

E. An **injection molded** overmold surrounding said ~~**nexus**~~ **undermold and forming an undermold-overmold interface only at said outer surface, wherein said interface is uniform and continuous, and** wherein said lead assembly combines power from a plurality of solar arrays and transmits that power to an inverter in a solar energy installation lacking a combiner box between said solar arrays and said inverter.

REMARKS

The PROPOSED amended claim overcomes the art of record, and in particular the combination of Jonczyk and Vander Ploog, for at least the following reasons:

A. Injection Molding Limitations

Jonczyk doesn't disclose an injection molded undermold, and Vander Ploog discloses an undermold formed by pouring[1]. It is noted that process steps should be considered where the manufacturing process steps would be expected to impart distinctive structural characteristics to the final product.[2] Here, injection molding imparts distinctive structural characteristics of uniformity and continuity of the interface between the undermold and overmold of the present invention. Very simply, Vander Ploogs method of manufacturing -- essentially pouring thermoplastic material into a pouch and allowing it to harden -- would not yield an interface that is uniform and continuous. Rather, it would be bumpy, lumpy, bubbly, and with inconsistent coverage.

B. Undermold-Overmold Interface At Outer Surface of Undermold Only

Vander Ploog's "undermold" 20 encases not only underlying electrical structures, but also the "overmold" 18 itself in a "mass of thermosetting material".[3] Said another way Vander Ploog's undermold "floats" in the hardened overmold. The claimed invention, on the other hand, pertains to an undermold that encases and stabilizes underlying electrical structures, and an overmold that encases the outer surface of the undermold.

---

[1] See column 3, lines 9 – 11 reading "A thermosetting plastic material is then poured into the pouch and hardens to form a secondary insulation indicated at 20."

[2] See, *inter alia, In re Garnero,* 412 F.2d 276, 279, 162 USPQ 221, 223 (CCPA 1979) and MPEP §2113.

[3] See column 3, lines 11 – 14 reading "This pourable material will flow into the space between the tube 18 and the cables 11 and 12 and also around the tube 18 to enclose this tube in a mass of thermosetting material."

Voltage, LLC
EX1021-232

The following demonstrative summarizes relevant structural features of present invention:

Covering nexus 19 with securing means 20:

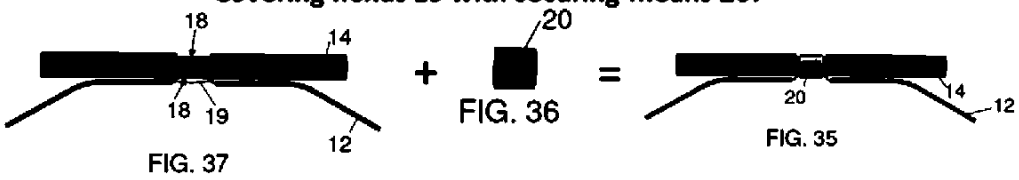

Adding undermold 22:

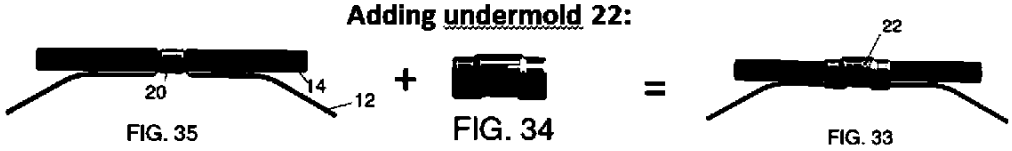

Adding overmold 24:

Respectfully submitted,

/Carla L. Gannon, 56,358/

Carla L. Gannon
Registration No. 56,358
Carla Gannon Law
8903 E. Oak Island Dr.
Suite 9
Oak Island, NC 28465
336-543-3797
cgannon@carlagannonlaw.com

Date: August 31, 2017
File No. SHOALS-59

Voltage, LLC
EX1021-233

Smith, Eric (Ryan)

From: Carla Gannon <cgannon@carlagannonlaw.com>
Sent: Thursday, August 31, 2017 7:43 AM
To: Smith, Eric (Ryan)
Cc: dbraam@carlagannonlaw.com
Subject: Pre-Interview Communication - 14/849,458 (SHOALS-59)

Hi Examiner Smith,

I look forward to speaking with you later.

Kind Regards,
Carla

CARLA GANNON
LAW

PATENTS • TRADEMARKS • COPYRIGHTS

8903 E. OAK ISLAND DR., SUITE 9, OAK ISLAND, NC 28465

321 N. FRONT ST., SUITE 304, WILMINGTON, NC 28401

910-805-7819 (O) • 888-686-9354 (F)

This message may contain information that is confidential, subject to attorney-client privilege, attorney work product privilege, and/or another lawfully recognized privilege. If you received this message in error or through inappropriate means, please immediately notify the sender by replying to this message, then permanently delete this message from all storage media, without forwarding or retaining a copy. Thank you.

UNITED STATES PATENT AND TRADEMARK OFFICE

UNITED STATES DEPARTMENT OF COMMERCE
United States Patent and Trademark Office
Address: COMMISSIONER FOR PATENTS
P.O. Box 1450
Alexandria, Virginia 22313-1450
www.uspto.gov

APPLICATION NO.	FILING DATE	FIRST NAMED INVENTOR	ATTORNEY DOCKET NO.	CONFIRMATION NO.
14/849,458	09/09/2015	Dean Solon	SHOALS-59	5067

57825 7590 09/06/2017
CARLA GANNON LAW
Carla L. Gannon, Esq.
8903 E. Oak Island Dr.
Suite 9
Oak Island, NC 28465

EXAMINER
SMITH, ERIC R

ART UNIT	PAPER NUMBER
1757	

NOTIFICATION DATE	DELIVERY MODE
09/06/2017	ELECTRONIC

Please find below and/or attached an Office communication concerning this application or proceeding.

The time period for reply, if any, is set in the attached communication.

Notice of the Office communication was sent electronically on above-indicated "Notification Date" to the following e-mail address(es):

cgannon@carlagannonlaw.com
carlagannon@yahoo.com
docketing@carlagannonlaw.com

Applicant-Initiated Interview Summary	Application No. 14/849,458	Applicant(s) Solon, Dean	
	Examiner ERIC R SMITH	Art Unit 1757	AIA Status Yes

All participants (applicant, applicants representative, PTO personnel):

(1) ERIC R. SMITH. (3) _____.

(2) Carla Gannon. (4) _____.

Date of Interview: 31 August 2017.

Type: ☑ Telephonic ☐ Video Conference
☐ Personal [copy given to: ☐ applicant ☐ applicant's representative]

Exhibit shown or demonstration conducted: ☐ Yes ☐ No.
If Yes, brief description: _____.

Issues Discussed ☐101 ☐112 ☐102 ☑103 ☐Others
(For each of the checked box(es) above, please describe below the issue and detailed description of the discussion)

Claim(s) discussed: 1.

Identification of prior art discussed: Patent 3,852,516.

Substance of Interview
(For each issue discussed, provide a detailed description and indicate if agreement was reached. Some topics may include: identification or clarification of a reference or a portion thereof, claim interpretation, proposed amendments, arguments of any applied references etc...)

See Continuation Sheet.

Applicant recordation instructions: The formal written reply to the last Office action must include the substance of the interview. (See MPEP section 713.04). If a reply to the last Office action has already been filed, applicant is given a non-extendable period of the longer of one month or thirty days from this interview date, or the mailing date of this interview summary form, whichever is later, to file a statement of the substance of the interview

Examiner recordation instructions: Examiners must summarize the substance of any interview of record. A complete and proper recordation of the substance of an interview should include the items listed in MPEP 713.04 for complete and proper recordation including the identification of the general thrust of each argument or issue discussed, a general indication of any other pertinent matters discussed regarding patentability and the general results or outcome of the interview, to include an indication as to whether or not agreement was reached on the issues raised.

☐ Attachment

/ERIC R SMITH/ Primary Examiner, Art Unit 1757	

Voltage, LLC
EX1021-236

Summary of Record of Interview Requirements

Manual of Patent Examining Procedure (MPEP), Section 713.04, Substance of Interview Must be Made of Record
A complete written statement as to the substance of any face-to-face, video conference, or telephone interview with regard to an application must be made of record in the application whether or not an agreement with the examiner was reached at the interview.

Title 37 Code of Federal Regulations (CFR) 1.133 Interviews
Paragraph (b)

In every instance where reconsideration is requested in view of an interview with an examiner, a complete written statement of the reasons presented at the interview as warranting favorable action must be filed by the applicant. An interview does not remove the necessity for reply to Office action as specified in §§ 1.111, 1.135. (35 U.S.C. 132)

37 CFR §1.2 Business to be transacted in writing.
All business with the Patent or Trademark Office should be transacted in writing. The personal attendance of applicants or their attorneys or agents at the Patent and Trademark Office is unnecessary. The action of the Patent and Trademark Office will be based exclusively on the written record in the Office. No attention will be paid to any alleged oral promise, stipulation, or understanding in relation to which there is disagreement or doubt.

The action of the Patent and Trademark Office cannot be based exclusively on the written record in the Office if that record is itself incomplete through the failure to record the substance of interviews.

It is the responsibility of the applicant or the attorney or agent to make the substance of an interview of record in the application file, unless the examiner indicates he or she will do so. It is the examiners responsibility to see that such a record is made and to correct material inaccuracies which bear directly on the question of patentability.

Examiners must complete an Interview Summary Form for each interview held where a matter of substance has been discussed during the interview by checking the appropriate boxes and filling in the blanks. Discussions regarding only procedural matters, directed solely to restriction requirements for which interview recordation is otherwise provided for in Section 812.01 of the Manual of Patent Examining Procedure, or pointing out typographical errors or unreadable script in Office actions or the like, are excluded from the interview recordation procedures below. Where the substance of an interview is completely recorded in an Examiners Amendment, no separate Interview Summary Record is required.

The Interview Summary Form shall be given an appropriate Paper No., placed in the right hand portion of the file, and listed on the "Contents" section of the file wrapper. In a personal interview, a duplicate of the Form is given to the applicant (or attorney or agent) at the conclusion of the interview. In the case of a telephone or video-conference interview, the copy is mailed to the applicants correspondence address either with or prior to the next official communication. If additional correspondence from the examiner is not likely before an allowance or if other circumstances dictate, the Form should be mailed promptly after the interview rather than with the next official communication.

The Form provides for recordation of the following information:
- Application Number (Series Code and Serial Number)
- Name of applicant
- Name of examiner
- Date of interview
- Type of interview (telephonic, video-conference, or personal)
- Name of participant(s) (applicant, attorney or agent, examiner, other PTO personnel, etc.)
- An indication whether or not an exhibit was shown or a demonstration conducted
- An identification of the specific prior art discussed
- An indication whether an agreement was reached and if so, a description of the general nature of the agreement (may be by attachment of a copy of amendments or claims agreed as being allowable). Note: Agreement as to allowability is tentative and does not restrict further action by the examiner to the contrary.
- The signature of the examiner who conducted the interview (if Form is not an attachment to a signed Office action)

It is desirable that the examiner orally remind the applicant of his or her obligation to record the substance of the interview of each case. It should be noted, however, that the Interview Summary Form will not normally be considered a complete and proper recordation of the interview unless it includes, or is supplemented by the applicant or the examiner to include, all of the applicable items required below concerning the substance of the interview.

A complete and proper recordation of the substance of any interview should include at least the following applicable items:
1) A brief description of the nature of any exhibit shown or any demonstration conducted,-
2) an identification of the claims discussed,
3) an identification of the specific prior art discussed,
4) an identification of the principal proposed amendments of a substantive nature discussed, unless these are already described on the Interview Summary Form completed by the Examiner,
5) a brief identification of the general thrust of the principal arguments presented to the examiner,
   (The identification of arguments need not be lengthy or elaborate. A verbatim or highly detailed description of the arguments is not required. The identification of the arguments is sufficient if the general nature or thrust of the principal arguments made to the examiner can be understood in the context of the application file. Of course, the applicant may desire to emphasize and fully describe those arguments which he or she feels were or might be persuasive to the examiner.)
6) a general indication of any other pertinent matters discussed, and
7) if appropriate, the general results or outcome of the interview unless already described in the Interview Summary Form completed by the examiner.

Examiners are expected to carefully review the applicants record of the substance of an interview. If the record is not complete and accurate, the examiner will give the applicant an extendable one month time period to correct the record.

Examiner to Check for Accuracy

If the claims are allowable for other reasons of record, the examiner should send a letter setting forth the examiners version of the statement attributed to him or her. If the record is complete and accurate, the examiner should place the indication, Interview Record OK on the paper recording the substance of the interview along with the date and the examiners initials.

Continuation of Substance of Interview including description of the general nature of what was agreed to if an agreement was reached, or any other comments: Ms. Gannon sent proposed claim amendments (attached), comprising further limitations drawn toward the nature of the relationship between the undermold, drop lines, securing means, and overmold. Examiner Smith commented that any proposed claim amendment should find full support in the disclosure, and commented how the undermold-overmold interface being smooth and continuous did not seem to find at least literal support in the specification. Examiner Smith explained how such a limitation would likely require additional evidence that a PHOSITA would unambiguously understand that such an interface were present before it could be established that the disclosure as originally filed provides such support for that limitation.

Examiner Smith noted that, excepting the previously discussed limitation about the interface, the proposed amendment seemed to overcome the rejection of record, and determination of the patentability of such a claim would require further search and consideration.

Ms. Gannon pointed out that the office action of 5/30/2017 did not include a treatment of method claims 17 and 18. Examiner Smith confirmed that such an omission would likely result in the next action being nonfinal (assuming the action includes rejections or objections). Examiner Smith also pointed out that guidance regarding the allowability of a process requiring an allowable product as laid out in MPEP 821.04(b) are always appropriate, while pointing out that, in this case, no rejoinder is necessary and the Applicant is entitled to a treatment of the method claims.

IN THE UNITED STATES PATENT AND TRADEMARK OFFICE

In re Application of: Dean Solon
Serial No.: 14/849,458 **Examiner:** Eric R. Smith
Filed: 09/09/2015 **Art Unit:** 1757
Confirmation No.: 5067
For: LEAD ASSEMBLY FOR CONNECTING SOLAR PANEL ARRAYS TO INVERTER

Commissioner for Patents
PO Box 1450
Alexandria, VA 22313-1450

Sir:

INTERVIEW SUMMARY,
RESPONSE TO NON-FINAL OFFICE ACTION AND
REQUEST FOR EXTENSION OF TIME

This paper responds to the Office Action mailed May 30, 2017.

The requisite 1-month extension fee of $100, thereby permitting a Response be filed as late as September 30, 2017, is contemporarily submitted.

In the event additional fees are required, Applicant requests that this be considered the requisite petition.

The Commissioner is hereby authorized to charge any fees associated with this case to 506268.

Voltage, LLC
EX1021-239

INTERVIEW SUMMARY

Applicant gratefully acknowledges the telephonic interview of 8/31/17 between Examiner Eric Smith and Attorney Carla L. Gannon. Claim allowance was not agreed upon, but the parties discussed the following:

- Examiner Smith stated that he received and reviewed the Pre-Interview Communication dated 8/31/17.
- Examiner Smith stated his belief that the "…inner surface in direct contact with and fully encasing said securing means…" limitation overcomes the art of record, but that further consideration would be given to the issue.
- Examiner Smith stated that the "uniform and continuous" verbiage, if introduced into the claims, would require support.
- Attorney Gannon stated her intent to amend the independent claims to include the "…inner surface in direct contact with and fully encasing said securing means…" limitations, add "injection molded" limitations as dependent claim subject matter, and not include "uniform and continuous" verbiage in the current response.

Voltage, LLC
EX1021-240

RESPONSE TO NON-FINAL OFFICE ACTION

Amendments to the Claims

The current status of the claims is listed in the "Listing of the Claims" below. This replaces all previous versions of claims.

Listing of the Claims:

1. **(Currently Amended)** A lead assembly for use in a solar energy installation including:

   A. A first drop line and a second drop line, said first drop line terminating in a drop line connector;

   B. At least one feeder cable terminating in a feeder cable connector, said first drop line and said at least one feeder cable electrically coupled at a nexus;

   C. A means for securing said nexus, said securing means selected from the group consisting of compression lug, soldering, splicing, crimping, and combinations thereof; ~~**and**~~

   D. **An undermold having an inner surface and an outer surface, said inner surface in direct contact with and fully encasing said securing means; and**

   E. An overmold surrounding said ~~**nexus**~~ **undermold and forming an undermold-overmold interface only at said outer surface,** wherein said lead assembly combines power from a plurality of solar arrays and transmits that power to an inverter in a solar energy installation lacking a combiner box between said solar arrays and said inverter.

2. (Previously Amended) The lead assembly of claim 1 wherein said first drop line includes a section of exposed wire at said nexus.

3. (Original) The lead assembly of claim 2 wherein said at least one feeder cable includes a section of exposed wire at said nexus.

4. **(Currently Cancelled)**

5. (Original) The lead assembly of claim 4 wherein said overmold defines at least one aperture.

Voltage, LLC
EX1021-242

6. **(Currently Amended)** A solar power system **comprising**:

A. A first plurality of solar panels electrically coupled by a first wire harness to form a first solar array;

B. A second plurality of solar panels electrically coupled by a second wire harness to form a second solar array;

C. A lead assembly including a first drop line electrically connected to said first wire harness, and a feeder cable electrically connected to a component selected from the group consisting of a trunk buss jumper, an inverter, a connection unit, a recombiner, and a disconnect unit, said first drop line and said feeder cable electrically connected at a first nexus **secured by a compression lug, said compression lug surrounded by an undermold having an inner surface and an outer surface, said inner surface in direct contact with and fully encasing said compression lug, with said undermold surrounded by an overmold and forming an undermold-overmold interface only at said outer surface**; **and**

D. A second drop line electrically connected to said second wire harness, said second drop line electrically connected to said feeder cable at a second nexus, wherein the solar power system doesn't include a combiner box upstream of said component.

7. (Cancelled)

8. (Cancelled)

9. (Original) The solar power system of claim 6 wherein said lead assembly includes an end piece.

10. (Original) The solar power system of claim 6 wherein said first drop line terminates in a drop line connector.

11. (Original) The solar power system of claim 6 wherein said feeder cable terminates in a feeder cable connector.

12. (Original) The solar power system of claim 6 wherein said first drop line includes 18 to 4 gauge wire.

13. (Original) The solar power system of claim 6 wherein said feeder cable includes 6 gauge to 1000MCM wire.

14. (Original) The solar power system of claim 6 wherein said first nexus is surrounded by a compression lug.

15. (Original) The solar power system of claim 14 wherein said compression lug is surrounded by an undermold.

16. (Original) The solar power system of claim 15 wherein said undermold is surrounded by an overmold.

17. **(Currently Withdrawn)** A method of constructing a solar power installation including the steps of:

A. Connecting a first plurality of solar panels to a first wire harness to form a first solar array;

B. Connecting said first wire harness to the first drop line of a lead assembly;

C. Connecting a second plurality of solar panels to a second wire harness to form a second solar array;

D. Connecting said second wire harness to the second drop line of said lead assembly; and

E. Electrically coupling said lead assembly to an inverter without electrically coupling to a combiner box.

18. **(Currently Withdrawn)** The method of claim 17 wherein said step of electrically coupling said lead assembly to an inverter includes the steps of electrically coupling a feeder cable to said inverter.

19. **(New)** The lead assembly of claim 1 wherein said undermold is injection molded.

20. **(New)** The lead assembly of claim 1 wherein said overmold is injection molded.

Remarks

Applicant gratefully acknowledges the Office Action dated 5/30/17. Upon considering the Office's cited art and remarks, and interviewing the case with Examiner Smith, independent claims 1 and 6 have been amended; claim 4 has been cancelled; claims 17 and 18 have been withdrawn; and claims 19 and 20 have been added. Claims 7 and 8 were previously cancelled. Accordingly, claims **1**-3; 5; **6**; 9-16; 19 and 20 are currently pending, with no claims allowable at this time.

The Office's specific issues are addressed as follows:

I. 35 USC §112(f) Rejection of Claims 6 and 9-16 as being indefinite

"*A solar power system*" has been replaced with "*A solar power system* ***comprising***".

Withdrawal of the rejection is respectfully requested.

II. 35 USC §102(a) / §103(b) Rejection of Claims 1-3 as being Anticipated/Obvious in View of Jonczyk / Avrutsky

Claim 1 has been amended to recite, in relevant part:

D. An undermold having an inner surface and an outer surface, said inner surface in direct contact with and fully encasing said securing means; and

E. An overmold surrounding said ~~nexus~~ undermold and forming an undermold-overmold interface only at said outer surface, wherein…

Vander Ploog's "undermold" 20 encases not only underlying electrical structures, but also the "overmold" 18 itself in a "mass of thermosetting

material".[1] Said another way Vander Ploog's undermold "floats" in the hardened overmold. The claimed invention, on the other hand, pertains to an undermold that encases and stabilizes underlying electrical structures, and an overmold that encases the outer surface of the undermold.

While the originally filed specification doesn't discuss "inner surface", "outer surface", "undermold-overmold interface" and orientation of undermold-overmold interface relative to outer surface, *verbatim,* these features are inherent to the specification's description of the inventions, and would be understood to be present by the Person Having Ordinary Skill In The Art (the "PHOSITA"). More specifically:

Inner Surface of Undermold:

PHOSITA would understand this to be inner surface of undermold 22

Outer Surface of Undermold:

PHOSITA would understand this to be outer surface of undermold 22

[1] See column 3, lines 11 – 14 reading "This pourable material will flow into the space between the tube 18 and the cables 11 and 12 and also around the tube 18 to enclose this tube in a mass of thermosetting material."

Inner Surface In Direct Contact With And Fully Encasing Securing Means:

The PHOSITA would understand the inner surface of undermold 22 to be in direct contact with, and fully encasing securing means 20, based on, *inter alia,* the specification's recitation of:

"Compression lug 20 is preferably surrounded by undermold 22, which is preferably composed of RTP 2099E x 127663 from RTP Co. of Winona, MN that has been applied by injection molding." [2]

Said another way:

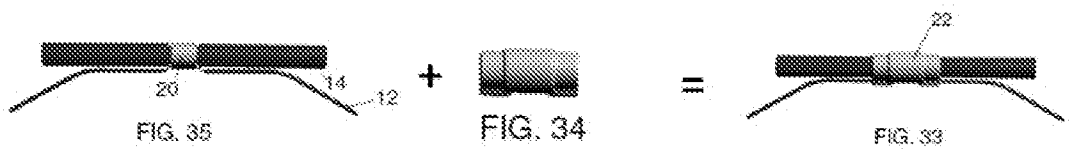

The "direct contact" verbiage is further confirmed by the undermold 22 being applied by injection molding. Injection molding, by its nature, would create direct contact between undermold 22 and securing means 20.

Overmold Surrounding Undermold:

Overmold 24 surrounding undermold 22 is clearly disclosed in FIG. 48:

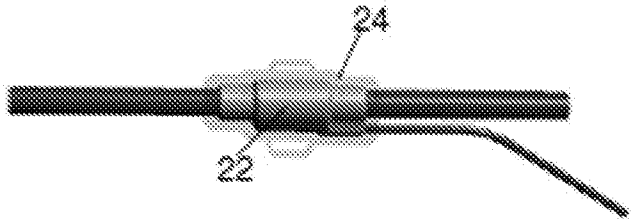

FIG. 48

[2] See page 9, lines 28 – 31.

Undermold-Overmold Interface Only at Outer Surface (Of Undermold):

This structural feature is also clearly disclosed in FIG. 48, above, because only outer surface of 22 interfaces with overmold 24.

Accordingly, no new matter has been introduced.

III. 35 USC §103(b) Rejection of Claims 4 and 5 as obvious in view of Jonczyk, US PGPub 2011/0011642 and Solon

This rejection is deemed moot in view of the amendments to base claim 1, as discussed in Section II above.

IV. 35 USC §103(b) Rejection of Claims 4 and 5 as obvious in view of Jonczyk, Avrutsky and Solon

This rejection is deemed moot in view of the amendments to base claim 1, as discussed in Section II above.

V. 35 USC §103(b) Rejection of Claims 6, 9-12, and 14 as obvious in view of Jonczyk, Avrutsky, US PGPub 2010/0258157, and Arai

Independent claim 6 is believed to overcome the art of record for the reasons set forth in section II above. No new matter has been introduced.

VI. 35 USC §103(b) Rejection of Claim 13 as obvious in view of Jonczyk, Avrutsky, Arai, US PGPub 2013/0269746, and Ramsey

This rejection is deemed moot in view of the amendments to base claim 6, as discussed in Sections V and II above.

VII. 35 USC §103(b) Rejection of Claims 15 and 16 as obvious in view of Jonczyk, Avrutsky, Arai, US 3,852,516, and Vander Ploog

This rejection is deemed moot in view of the amendments to base claim 6, as discussed in Sections V and II above.

Voltage, LLC
EX1021-249

VIII. Other Items

Applicant requests withdrawal of method claims 17 and 18 in order to expedite prosecution at this time, but reserves the right to request rejoinder at a later time.

Applicant notes that an injection molded undermold, and an injected molded overmold, the subject matter of newly added claims 19 and 20, respectively, was set forth in the originally filed specification.[3] No new matter has been introduced.

Conclusion

For the reasons set forth herein, Applicant believes all claims are allowable over the art of record.

Accordingly, Examiner Smith is earnestly encouraged to contact Attorney Gannon by telephone or email to resolve any outstanding issues, or to discuss claim amendments which would facilitate allowance.

Respectfully submitted,

/Carla L. Gannon, 56,358/

Carla L. Gannon
Registration No. 56,358
Carla Gannon Law
8903 E. Oak Island Dr.
Suite 9
Oak Island, NC 28465
336-543-3797
cgannon@carlagannonlaw.com

Date: September 1, 2017
File No.: SHOALS-59

[3] See pages 9 - 10, lines 28 – 2.

Voltage, LLC
EX1021-250

Electronic Patent Application Fee Transmittal

Application Number:	14849458
Filing Date:	09-Sep-2015
Title of Invention:	LEAD ASSEMBLY FOR CONNECTING SOLAR PANEL ARRAYS TO INVERTER
First Named Inventor/Applicant Name:	Dean Solon
Filer:	Carla L. Gannon/Donna Braam
Attorney Docket Number:	SHOALS-59

Filed as Small Entity

Filing Fees for **Utility under 35 USC 111(a)**

Description	Fee Code	Quantity	Amount	Sub-Total in USD($)
Basic Filing:				
Pages:				
Claims:				
Miscellaneous-Filing:				
Petition:				
Patent-Appeals-and-Interference:				
Post-Allowance-and-Post-Issuance:				
Extension-of-Time:				

Description	Fee Code	Quantity	Amount	Sub-Total in USD($)
Extension - 1 month with $0 paid	2251	1	100	100
Miscellaneous:				
			Total in USD ($)	**100**

Electronic Acknowledgement Receipt

EFS ID:	30250962
Application Number:	14849458
International Application Number:	
Confirmation Number:	5067
Title of Invention:	LEAD ASSEMBLY FOR CONNECTING SOLAR PANEL ARRAYS TO INVERTER
First Named Inventor/Applicant Name:	Dean Solon
Customer Number:	57825
Filer:	Carla L. Gannon/Donna Braam
Filer Authorized By:	Carla L. Gannon
Attorney Docket Number:	SHOALS-59
Receipt Date:	01-SEP-2017
Filing Date:	09-SEP-2015
Time Stamp:	12:03:16
Application Type:	Utility under 35 USC 111(a)

Payment information:

Submitted with Payment	yes
Payment Type	CARD
Payment was successfully received in RAM	$100
RAM confirmation Number	090117INTEFSW12043000
Deposit Account	
Authorized User	

The Director of the USPTO is hereby authorized to charge indicated fees and credit any overpayment as follows:

File Listing:

Document Number	Document Description	File Name	File Size(Bytes)/ Message Digest	Multi Part /.zip	Pages (if appl.)
1	Amendment/Req. Reconsideration-After Non-Final Reject	Response_053017OfficeAction_SHOALS-59.pdf	112195 0c04d8e6fd08899f0d36ff7c2bdc4b17a711fdf8	no	12
Warnings:					
Information:					
2	Fee Worksheet (SB06)	fee-info.pdf	30345 fa2313c43c7f78fc1fafed04e20cb03d6a313a59	no	2
Warnings:					
Information:					
		Total Files Size (in bytes):	142540		

This Acknowledgement Receipt evidences receipt on the noted date by the USPTO of the indicated documents, characterized by the applicant, and including page counts, where applicable. It serves as evidence of receipt similar to a Post Card, as described in MPEP 503.

New Applications Under 35 U.S.C. 111
If a new application is being filed and the application includes the necessary components for a filing date (see 37 CFR 1.53(b)-(d) and MPEP 506), a Filing Receipt (37 CFR 1.54) will be issued in due course and the date shown on this Acknowledgement Receipt will establish the filing date of the application.
National Stage of an International Application under 35 U.S.C. 371
If a timely submission to enter the national stage of an international application is compliant with the conditions of 35 U.S.C. 371 and other applicable requirements a Form PCT/DO/EO/903 indicating acceptance of the application as a national stage submission under 35 U.S.C. 371 will be issued in addition to the Filing Receipt, in due course.
New International Application Filed with the USPTO as a Receiving Office
If a new international application is being filed and the international application includes the necessary components for an international filing date (see PCT Article 11 and MPEP 1810), a Notification of the International Application Number and of the International Filing Date (Form PCT/RO/105) will be issued in due course, subject to prescriptions concerning national security, and the date shown on this Acknowledgement Receipt will establish the international filing date of the application.

UNITED STATES PATENT AND TRADEMARK OFFICE

UNITED STATES DEPARTMENT OF COMMERCE
United States Patent and Trademark Office
Address: COMMISSIONER FOR PATENTS
P.O. Box 1450
Alexandria, Virginia 22313-1450
www.uspto.gov

APPLICATION NO.	FILING DATE	FIRST NAMED INVENTOR	ATTORNEY DOCKET NO.	CONFIRMATION NO.
14/849,458	09/09/2015	Dean Solon	SHOALS-59	5067

57825 7590 05/30/2017
CARLA GANNON LAW
Carla L. Gannon, Esq.
8903 E. Oak Island Dr.
Suite 9
Oak Island, NC 28465

EXAMINER
SMITH, ERIC R

ART UNIT	PAPER NUMBER
1757	

NOTIFICATION DATE	DELIVERY MODE
05/30/2017	ELECTRONIC

Please find below and/or attached an Office communication concerning this application or proceeding.

The time period for reply, if any, is set in the attached communication.

Notice of the Office communication was sent electronically on above-indicated "Notification Date" to the following e-mail address(es):

cgannon@carlagannonlaw.com
carlagannon@yahoo.com
docketing@carlagannonlaw.com

Voltage, LLC
EX1021-255

Office Action Summary	Application No. 14/849,458	Applicant(s) SOLON, DEAN	
	Examiner ERIC R. SMITH	Art Unit 1757	AIA (First Inventor to File) Status Yes

-- The MAILING DATE of this communication appears on the cover sheet with the correspondence address --

Period for Reply

A SHORTENED STATUTORY PERIOD FOR REPLY IS SET TO EXPIRE 3 MONTHS FROM THE MAILING DATE OF THIS COMMUNICATION.

- Extensions of time may be available under the provisions of 37 CFR 1.136(a). In no event, however, may a reply be timely filed after SIX (6) MONTHS from the mailing date of this communication.
- If NO period for reply is specified above, the maximum statutory period will apply and will expire SIX (6) MONTHS from the mailing date of this communication.
- Failure to reply within the set or extended period for reply will, by statute, cause the application to become ABANDONED (35 U.S.C. § 133). Any reply received by the Office later than three months after the mailing date of this communication, even if timely filed, may reduce any earned patent term adjustment. See 37 CFR 1.704(b).

Status

1)☒ Responsive to communication(s) filed on 5/18/2017.

☐ A declaration(s)/affidavit(s) under **37 CFR 1.130(b)** was/were filed on _____.

2a)☐ This action is **FINAL**. 2b)☒ This action is non-final.

3)☐ An election was made by the applicant in response to a restriction requirement set forth during the interview on _____; the restriction requirement and election have been incorporated into this action.

4)☐ Since this application is in condition for allowance except for formal matters, prosecution as to the merits is closed in accordance with the practice under *Ex parte Quayle*, 1935 C.D. 11, 453 O.G. 213.

Disposition of Claims*

5)☒ Claim(s) 1-6 and 9-16 is/are pending in the application.

5a) Of the above claim(s) _____ is/are withdrawn from consideration.

6)☐ Claim(s) _____ is/are allowed.

7)☒ Claim(s) 1-6,9-16 is/are rejected.

8)☐ Claim(s) _____ is/are objected to.

9)☐ Claim(s) _____ are subject to restriction and/or election requirement.

* If any claims have been determined allowable, you may be eligible to benefit from the **Patent Prosecution Highway** program at a participating intellectual property office for the corresponding application. For more information, please see http://www.uspto.gov/patents/init_events/pph/index.jsp or send an inquiry to PPHfeedback@uspto.gov.

Application Papers

10)☐ The specification is objected to by the Examiner.

11)☒ The drawing(s) filed on 9/9/2015 is/are: a)☒ accepted or b)☐ objected to by the Examiner.

Applicant may not request that any objection to the drawing(s) be held in abeyance. See 37 CFR 1.85(a).

Replacement drawing sheet(s) including the correction is required if the drawing(s) is objected to. See 37 CFR 1.121(d).

Priority under 35 U.S.C. § 119

12)☐ Acknowledgment is made of a claim for foreign priority under 35 U.S.C. § 119(a)-(d) or (f).

Certified copies:

a)☐ All b)☐ Some** c)☐ None of the:

1.☐ Certified copies of the priority documents have been received.

2.☐ Certified copies of the priority documents have been received in Application No. _____.

3.☐ Copies of the certified copies of the priority documents have been received in this National Stage application from the International Bureau (PCT Rule 17.2(a)).

** See the attached detailed Office action for a list of the certified copies not received.

Attachment(s)

1) ☒ Notice of References Cited (PTO-892)

2) ☐ Information Disclosure Statement(s) (PTO/SB/08a and/or PTO/SB/08b) Paper No(s)/Mail Date _____.

3) ☐ Interview Summary (PTO-413) Paper No(s)/Mail Date. _____ .

4) ☐ Other: _____.

Voltage, LLC
EX1021-256

The present application, filed on or after March 16, 2013, is being examined under the first inventor to file provisions of the AIA.

DETAILED ACTION

Election/Restrictions

Applicant's election without traverse of species A in the reply filed on 5/18/2017 is acknowledged.

Claim Interpretation

The examiner notes that claim 1 recites the phrase "a means for securing said nexus". In some circumstances, use of the word "means" (or "step for") in a claim with functional language creates a rebuttable presumption that the claim element is to be treated in accordance with 35 U.S.C. 112(f) (pre-AIA 35 U.S.C. 112, sixth paragraph). The presumption that 35 U.S.C. 112(f) (pre-AIA 35 U.S.C. 112, sixth paragraph) is invoked is rebutted when the function is recited with sufficient structure, material, or acts within the claim itself to entirely perform the recited function. The phrase is immediately followed by a Markush group of potential structural elements or product-by-process limitations which would fulfill such means. Therefore the phrase is not interpreted to be an invocation of 35 U.S.C. 112(f) (pre-AIA 35 U.S.C. 112, sixth paragraph), as the Markush group recites sufficient structure, materials or acts to perform the recited function. Further, the examiner notes that the discussion of such means at the bottom of page 9 of the instant specification is no narrower in scope than the Markush group. For more information, see MPEP § 2173 *et seq.* and *Supplementary Examination Guidelines for Determining Compliance With 35 U.S.C. 112 and for Treatment of Related Issues in Patent Applications*, 76 FR 7162, 7167 (Feb. 9, 2011).

Claim Rejections - 35 USC § 112

The following is a quotation of 35 U.S.C. 112(b):
(b) CONCLUSION.—The specification shall conclude with one or more claims particularly pointing out and distinctly claiming the subject matter which the inventor or a joint inventor regards as the invention.

The following is a quotation of 35 U.S.C. 112 (pre-AIA), second paragraph:
The specification shall conclude with one or more claims particularly pointing out and distinctly claiming the subject matter which the applicant regards as his invention.

Claims 6 and 9-16 rejected under 35 U.S.C. 112(b) or 35 U.S.C. 112 (pre-AIA), second paragraph, as being indefinite for failing to particularly point out and distinctly claim the subject matter which the inventor or a joint inventor, or for pre-AIA the applicant regards as the invention.

Claim 6 recites "A solar power system:", followed by a list of limitations. There is no transitional phrase. Therefore it is unclear if the claim is open or closed to additional limitations. The claim will be assumed to have "comprising" (open) language. **Claims 9-16** are also rejected based on their dependence from claim 6.

Claim Rejections - 35 USC § 102

In the event the determination of the status of the application as subject to AIA 35 U.S.C. 102 and 103 (or as subject to pre-AIA 35 U.S.C. 102 and 103) is incorrect, any correction of the statutory basis for the rejection will not be considered a new ground of rejection if the prior art relied upon, and the rationale supporting the rejection, would be the same under either status.

The following is a quotation of the appropriate paragraphs of 35 U.S.C. 102 that form the basis for the rejections under this section made in this Office action:

> A person shall be entitled to a patent unless –
>
> (a)(1) the claimed invention was patented, described in a printed publication, or in public use, on sale or otherwise available to the public before the effective filing date of the claimed invention.

Claim Rejections - 35 USC § 103

The following is a quotation of 35 U.S.C. 103 which forms the basis for all obviousness rejections set forth in this Office action:

> A patent for a claimed invention may not be obtained, notwithstanding that the claimed invention is not identically disclosed as set forth in section 102, if the differences between the claimed invention and the prior art are such that the claimed invention as a whole would have been obvious before the effective filing date of the claimed invention to a person having ordinary skill in the art to which the claimed invention pertains. Patentability shall not be negated by the manner in which the invention was made.

The factual inquiries set forth in *Graham v. John Deere Co.*, 383 U.S. 1, 148 USPQ 459 (1966), that are applied for establishing a background for determining obviousness under 35 U.S.C. 103 are summarized as follows:

1. Determining the scope and contents of the prior art.

2. Ascertaining the differences between the prior art and the claims at issue.

3. Resolving the level of ordinary skill in the pertinent art.

4. Considering objective evidence present in the application indicating obviousness or nonobviousness.

Claim(s) 1-3 is/are rejected under 35 U.S.C. 102(a)(1) as being anticipated by, or alternatively under 35 U.S.C. 103 as being unpatentable over US PGPub 2010/0139733 to Jonczyk.

Regarding claims 1-3, Jonczyk teaches a lead assembly

A. A first drop line 56 and a second drop line 58, the first drop line terminating in a drop liner connector 66 (Figs. 2, 3, ¶0025, 0026, 0029, 0030)

B. At least one feeder cable (analogous element 52 terminating in a feeder cable connector 74, the first drop line 56 and the at least one feeder cable electrically coupled at a nexus (the two cables physically meet at a nexus coincident with the cutout 4 in Fig. 3, ¶0027, 0031, 0032)

C. A means for securing the nexus, the securing means being crimping (element 32 is a crimp barrel, Fig. 4)

D. An overmold 82 surrounding the nexus.

The claim is drawn to a lead assembly. The limitations of the preamble that the lead assembly is for use in a solar energy installation, and that the lead assembly combines power from a plurality of solar arrays and transmits that power to an inverter in a solar energy installation lacking a combiner box between the solar arrays and the inverter are intended use limitations. Intended use limitations are given weight to the extent that the prior art structure is capable of performing the intended use. See MPEP § 2111.02, 2112.01 and 2114-2115. The examiner interprets the lead assembly of Jonczyk to necessarily be capable of performing those intended use, as the lead assembly has the recited structure. Where the claimed and prior art products are identical or substantially identical in structure or composition, or are

produced by identical or substantially identical processes, a *prima facie* case of either anticipation or obviousness has been established. *In re Best,* 562 F.2d 1252, 1255, 195 USPQ 430, 433 (CCPA 1977). "When the PTO shows a sound basis for believing that the products of the applicant and the prior art are the same, the applicant has the burden of showing that they are not." *In re Spada,* 911 F.2d 705, 709, 15 USPQ2d 1655, 1658 (Fed. Cir. 1990). §2112.01.I. Further, Jonczyk teaches that such a lead assembly is capable of performing several of those intended uses (Fig. 12, ¶0040).

Per claims 2 and 3, Jonczyk teaches the limitations of claim 1. Jonczyk teaches that the first drop line 56, and the at least one feeder cable 52, includes a section of exposed wire at the nexus (Fig. 4, ¶0032).

Claims 1-3 is/are rejected under 35 U.S.C. 103 as being unpatentable over Jonczyk, and further in view of US PGPub 2012/0217973 to Avrutsky.

Regarding claims 1-3, Jonczyk teaches a lead assembly

A. A first drop line 56 and a second drop line 58, the first drop line terminating in a drop liner connector 66 (Figs. 2, 3, ¶0025, 0026, 0029, 0030)

B. At least one feeder cable 52 terminating in a feeder cable connector 74, the first drop line 56 and the at least one feeder cable electrically coupled at a nexus (the two cables physically meet at a nexus coincident with the cutout 4 in Fig. 3, ¶0027, 0031, 0032)

C. A means for securing the nexus, the securing means being crimping (element 32 is a crimp barrel, Fig. 4)

D. An overmold 82 surrounding the nexus.

The claim is drawn to a lead assembly. The limitations of the preamble that the lead assembly is for use in a solar energy installation, and that the lead assembly combines power from a plurality of solar arrays and transmits that power to an inverter in a solar energy installation lacking a combiner box between the solar arrays and the inverter are intended use limitations. Intended use limitations are given weight to the extent that the prior art structure is capable of performing the intended use. See MPEP § 2111.02, 2112.01 and 2114-2115.

In the event that the intended use limitations can be shown to define the structure or properties of the claimed assembly, Jonczyk teaches that such a lead assembly is capable of being used in a solar energy installation 240, to combine power from a plurality of solar arrays 242 and transmit the power to an inverter 254 (Fig. 12, ¶0040). Jonczyk teaches a combiner box 252 between the solar arrays and the inverter. Avrutsky teaches a similar installation (element 100 of Fig. 1) with an analogous lead assembly (105), and teaches that such an installation may comprise a combiner box (106) between a plurality of solar arrays and an inverter (103), or that such a combiner box may alternatively be omitted ("the string bus 105 can be connected to the inverter 105 directly or as a part of a mesh network or combiner boxes or fuse boxes", ¶0028, 0029). The omission of an element and its function is obvious if the function of the element is not desired. MPEP §2144.04.II. Therefore it would have been obvious to a person having ordinary skill in the art as of the effective filing date of the claimed invention that the claimed lead assembly could be used in a solar energy installation lacking a combiner box between solar arrays and the inverter, as Avrutsky teaches that a combiner box may be omitted if desired.

Per claims 2 and 3, modified-Jonczyk teaches the limitations of claim 1. Jonczyk teaches that the first drop line 56, and the at least one feeder cable 52, includes a section of exposed wire at the nexus (Fig. 4, ¶0032).

Claims 4 and 5 is/are rejected under 35 U.S.C. 103 as being unpatentable over Jonczyk as applied to claim 1 above, and further in view of US PGPub 2011/0011642 to Solon. Claims 4 and 5 is/are rejected under 35 U.S.C. 103 as being unpatentable over Jonczyk and Avrutsky as applied to claim 1 above, and further in view of Solon.

Regarding claims 4 and 5, Jonczyk and modified-Jonczyk teaches the limitations of claim 1. Jonczyk does not teach an undermold positioned between the nexus and the overmold. Solon teaches that an undermold (element 40 of Figs. 9) may be positioned between a nexus of cables and an overmold (50) (¶0027-0029). The combination of familiar elements is likely to be obvious when it does no more than yield predictable results. See *KSR International Co. v. Teleflex Inc.*, 550 U.S. 398, 415-421, 82 USPQ2d 1385, 1395 – 97 (2007) (see MPEP § 2143, A.). Therefore it would have been obvious as of the effective

filing date of the claimed invention to a person having ordinary skill in the art to form an undermold positioned between the nexus and the overmold of Jonczyk or modified-Jonczyk based on Solon's teachings of the suitability of doing so.

Jonczyk teaches that the overmold 82 of that invention defines at least one aperture 92 (Fig. 4, ¶0032).

Claims 6, 9-12, and 14 is/are rejected under 35 U.S.C. 103 as being unpatentable over Jonczyk, and further in view of Avrutsky and US PGPub 2010/0258157 to Arai.

Regarding claim 6, 9-12, and 14, Jonczyk teaches a solar power system comprising

A. A first plurality of solar panels 244 (e. g. top left element 242 in Fig. 12) electrically coupled to form a first solar array (¶0039, 0040)

B. A second plural of solar panels 244 (e. g. element 242 below the top left element 242) electrically coupled to form a second solar array

C. A lead assembly 190 including a first drop line (analogous element 56 of Figs. 2, 3) electrically connected to first solar array, and a feeder cable (analogous element 52) electrically connected to an inverter 254, the first drop line and the feeder cable electrically connected at a first nexus (the two cables physically meet at a nexus coincident with the cutout 4 in Fig. 3, ¶0025-0032)

D. A second drop line (analogous element 58) electrically connected to the second solar array, the second drop line electrically connected to the feeder cable at a second nexus (overlapping with element 84).

Jonczyk teaches a combiner box 252 between the solar arrays and the inverter. Avrutsky teaches a similar system (element 100 of Fig. 1) with an analogous lead assembly (105), and teaches that such an installation may comprise a combiner box (106) between a plurality of solar arrays and an inverter (103), or that such a combiner box may alternatively be omitted ("the string bus 105 can be connected to the inverter 105 directly or as a part of a mesh network or combiner boxes or fuse boxes", ¶0028, 0029). The omission of an element and its function is obvious if the function of the element is not desired. MPEP §2144.04.II. Therefore it would have been obvious to a person having ordinary skill in the art as of the

effective filing date of the claimed invention that the claimed lead assembly could be used in a solar energy installation lacking a combiner box between solar arrays and the inverter, as Avrutsky teaches that a combiner box may be omitted if desired. As such, the system of modified-Jonczyk would not include a combiner box upstream of the inverter.

Jonczyk teaches that the solar panels of the first and second solar arrays are part of an electrical circuit, but does not specifically teach that they are coupled by a first and second wire harness, respectively. Arai teaches that such a circuit of solar panels can be coupled by a wire harness (Fig. 10, ¶0009, 0078-0081). The combination of familiar elements is likely to be obvious when it does no more than yield predictable results. See *KSR International Co. v. Teleflex Inc.*, 550 U.S. 398, 415-421, 82 USPQ2d 1385, 1395 – 97 (2007) (see MPEP § 2143, A.). Therefore it would have been obvious as of the effective filing date to electrically couple the first (second) plurality of solar panels by a first (second) wire harness to form the first (second) solar array because such an element is commonly used to form arrays. Further, a person having ordinary skill in the art would appreciate that the first (second) drop line should be electrically connected to the first (second) wire harness in order to provide the electrical connection of the arrays to the inverter of modified-Jonczyk, as Arai teaches that such harnesses are used in that way.

Per claim 9, modified-Jonczyk teaches the limitations of claim 6. Jonczyk teaches that the lead assembly 190 includes an end piece (analogous element 74 of Fig.2, ¶0030).

Per claim 10, modified-Jonczyk teaches the limitations of claim 6. Jonczyk teaches that the first drop line terminates in a drop line connector (analogous element 66 of Fig. 2, ¶0028).

Per claim 11, modified-Jonczyk teaches the limitations of claim 6. Jonczyk teaches that the feeder cable terminates in a feeder cable connector (analogous element 162 in Fig. 7, ¶0034).

Per claim 12, modified-Jonczyk teaches the limitations of claim 6. Jonczyk teaches that the first drop line (described as being formed of secondary conductor in ¶0028) may be include 10 gauge or 12 gauge wire (¶0025). This is interpreted to be within the range "18 to 4 gauge wire". In the case where the claimed ranges “overlap or lie inside ranges disclosed by the prior art” a *prima facie* case of obviousness exists. *In re Wertheim,* 541 F.2d 257, 191 USPQ 90 (CCPA 1976); *In re Woodruff,* 919 F.2d 1575, 16 USPQ2d 1934 (Fed. Cir. 1990). MPEP §2144.05.

Per claim 14, modified-Jonczyk teaches the limitations of claim 6. The limitation that the first nexus is surrounded by a compression lug is interpreted in light of the instant disclosure. Figure 36 of the drawings shows a compression lug, with the form of a cylinder. Figures 35 and 37, and the bottom of page 9 of the specification, describe how the lug fits around the feeder cable and drop line, such that the lug holds the line and cable in contact. Figure 7 also shows an interaction between a lug, drop line, and feeder cable. A person having ordinary skill in the art would appreciate that an element analogous to element 32 of Fig. 4 of Jonczyk, having the form of a cylinder (compare Figs. 2, and 4, which show that element 32 has a rectangular profile in a top-down view and a circular profile in a cross-sectional view) surrounds the nexus and holds the exposed portions of the line and cable in contact (¶0032). Therefor a person having ordinary skill in the art would appreciate that the first nexus of Jonczyk is surrounded by a compression lug.

Claim 13 is/are rejected under 35 U.S.C. 103 as being unpatentable over Jonczyk, , Avrutsky, and Arai as applied to claim 6 above, and further in view of US PGPub 2013/0269746 to Ramsey. Supporting information is provided by US PGPub 2009/0300909 to Kummer and US PGPub 2011/0174521 to Hernandez.

Regarding claim 13, modified-Jonczyk teaches the limitations of claim 6. The limitation that the feeder cable includes 6 gauge to 1000MCM wire is interpreted according to ¶0023 of Kummer and Table 1 of Hernandez, which teaches that a 6 gauge wire has a diameter of 4.53 mm (at a particular temperature), and that 1000 MCM wire has diameter of 28.39 mm. Jonczyk teaches that the feeder cable (described as being formed of primary conductor in ¶0028) may be include 8 gauge wire (¶0025).

Ramsey, however, teaches that a gauge of wire can be varied according to the current being carried on the wire (¶0005, 0008, 0009, 0025). Therefore it would have been obvious to vary the size of the wire that forms the feeder cable according to the current being carried on the wire. The court has held that absent evidence of criticality or unexpected results, optimization of a result effective variable will not support the patentability of subject matter encompassed by the prior art. "[W]here the general conditions of a claim are disclosed in the prior art, it is not inventive to discover the optimum or workable ranges by

routine experimentation." See *In re Aller,* 220 F.2d 454, 456, 105 USPQ 233, 235 (CCPA 1955). See also MPEP §2144.05.

Claims 15 and 16 is/are rejected under 35 U.S.C. 103 as being unpatentable over Jonczyk, Avrutsky, and Arai as applied to claim 14 above, and further in view of US Patent 3,852,516 to Vander Ploog.

Regarding claims 15 and 16, modified-Jonczyk teaches the limitations of claim 14. Jonczyk teaches that the compression lug surrounding the first nexus establishes conductive contact between the feeder cable and first drop line, and that the compression lug and nexus is surrounded by an overmold, but does not teach an undermold surrounding the compression lug. Vander Ploog teaches that an undermold (element 20 of Fig. 1) may be positioned between a nexus of a wire and a cable that establishes conductive contact between the wire and cable and an overmold (18) (C2/L47-65, C3/L9-17) in order to moisture-proof an electrical connection (C1/L60-C2/L7). Therefore it would have been obvious as of the effective filing date of the claimed invention to a person having ordinary skill in the art to form an undermold positioned between the nexus and the overmold of modified-Jonczyk based on Vander Ploog's teachings that doing so provides resistance to moisture. As such, a person having ordinary skill in the art would surround the compression lug of modified-Jonczyk with the undermold, and surround the undermold by an overmold, in order to achieve the benefits and preserve the function of the nexus, compression, lug, undermold, and overmold.

Conclusion

Any inquiry concerning this communication or earlier communications from the examiner should be directed to ERIC R. SMITH whose telephone number is (571)270-7186. The examiner can normally be reached on Monday-Friday, 8:30-5:00.

Examiner interviews are available via telephone, in-person, and video conferencing using a USPTO supplied web-based collaboration tool. To schedule an interview, applicant is encouraged to use the USPTO Automated Interview Request (AIR) at http://www.uspto.gov/interviewpractice.

If attempts to reach the examiner by telephone are unsuccessful, the examiner's supervisor, Jeffrey Barton can be reached on 571 272 1307. The fax phone number for the organization where this application or proceeding is assigned is 571-273-8300.

Information regarding the status of an application may be obtained from the Patent Application Information Retrieval (PAIR) system. Status information for published applications may be obtained from either Private PAIR or Public PAIR. Status information for unpublished applications is available through Private PAIR only. For more information about the PAIR system, see http://pair-direct.uspto.gov. Should you have questions on access to the Private PAIR system, contact the Electronic Business Center (EBC) at 866-217-9197 (toll-free). If you would like assistance from a USPTO Customer Service Representative or access to the automated information system, call 800-786-9199 (IN USA OR CANADA) or 571-272-1000.

/ERIC R SMITH/
Primary Examiner, Art Unit 1757

Notice of References Cited	Application/Control No. 14/849,458	Applicant(s)/Patent Under Reexamination SOLON, DEAN	
	Examiner ERIC R. SMITH	Art Unit 1757	Page 1 of 1

U.S. PATENT DOCUMENTS

*		Document Number Country Code-Number-Kind Code	Date MM-YYYY	Name	CPC Classification	US Classification
*	A	US-2010/0139733 A1	06-2010	Jonczyk; Ralf	H01H85/201	136/244
*	B	US-2012/0217973 A1	08-2012	Avrutsky; Mordechay	G01R31/2605	324/501
*	C	US-2011/0011642 A1	01-2011	Solon; Dean	H01L31/05	174/72A
*	D	US-2010/0258157 A1	10-2010	Arai; Atsushi	H01R13/52	136/244
*	E	US-2011/0174521 A1	07-2011	Hernandez-Hernandez; Juan Manuel	H01B3/441	174/120SR
*	F	US-2009/0300909 A1	12-2009	KUMMER; RANDY	H01B7/295	29/825
*	G	US-2013/0269746 A1	10-2013	Ramsey; James R.	H01L31/05	136/244
*	H	US-3,852,516 A	12-1974	Vander Ploog; Cornelius J.	H02G15/18	174/71R
	I	US-				
	J	US-				
	K	US-				
	L	US-				
	M	US-				

FOREIGN PATENT DOCUMENTS

*		Document Number Country Code-Number-Kind Code	Date MM-YYYY	Country	Name	CPC Classification
	N					
	O					
	P					
	Q					
	R					
	S					
	T					

NON-PATENT DOCUMENTS

*		Include as applicable: Author, Title Date, Publisher, Edition or Volume, Pertinent Pages)
	U	
	V	
	W	
	X	

*A copy of this reference is not being furnished with this Office action. (See MPEP § 707.05(a).)
Dates in MM-YYYY format are publication dates. Classifications may be US or foreign.

Voltage, LLC
EX1021-267

UNITED STATES PATENT AND TRADEMARK OFFICE

UNITED STATES DEPARTMENT OF COMMERCE
United States Patent and Trademark Office
Address: COMMISSIONER FOR PATENTS
P.O. Box 1450
Alexandria, Virginia 22313-1450
www.uspto.gov

BIB DATA SHEET

CONFIRMATION NO. 5067

SERIAL NUMBER	FILING or 371(c) DATE	CLASS	GROUP ART UNIT	ATTORNEY DOCKET NO.
14/849,458	09/09/2015 RULE	136	1757	SHOALS-59

APPLICANTS

INVENTORS
Dean Solon, Gallatin, TN;

**** CONTINUING DATA ***************************
This appln claims benefit of 62/047,773 09/09/2014

**** FOREIGN APPLICATIONS ***************************

**** IF REQUIRED, FOREIGN FILING LICENSE GRANTED **** ** SMALL ENTITY **
09/21/2015

Foreign Priority claimed	☐ Yes ☑ No		STATE OR COUNTRY	SHEETS DRAWINGS	TOTAL CLAIMS	INDEPENDENT CLAIMS
35 USC 119(a-d) conditions met	☐ Yes ☑ No	☐ Met after Allowance	TN	26	18	3
Verified and Acknowledged	/ERIC R SMITH/ Examiner's Signature	Initials				

ADDRESS

CARLA GANNON LAW
Carla L. Gannon, Esq.
8903 E. Oak Island Dr.
Suite 9
Oak Island, NC 28465
UNITED STATES

TITLE

LEAD ASSEMBLY FOR CONNECTING SOLAR PANEL ARRAYS TO INVERTER

FILING FEE RECEIVED		
730	FEES: Authority has been given in Paper No._____ to charge/credit DEPOSIT ACCOUNT No._____ for following:	☐ All Fees ☐ 1.16 Fees (Filing) ☐ 1.17 Fees (Processing Ext. of time) ☐ 1.18 Fees (Issue) ☐ Other _____ ☐ Credit

Search Notes	Application/Control No.	Applicant(s)/Patent Under Reexamination
	14849458	SOLON, DEAN
	Examiner	**Art Unit**
	ERIC R SMITH	1757

CPC- SEARCHED

Symbol	Date	Examiner
H01L31/0422,0424,0482,0484,05	1/16/2014	ERS
E04D3/40	1/17/2014	ERS
H01L31/02013,02008,02021	7/1/2014	ERS
H02S40/00-38	5/23/2014	ERS

CPC COMBINATION SETS - SEARCHED

Symbol	Date	Examiner

US CLASSIFICATION SEARCHED

Class	Subclass	Date	Examiner
52	173.3	7/16/2013	ERS
136	243-265	7/16/2013	ERS

SEARCH NOTES

Search Notes	Date	Examiner
Keyword search in USPC subclasses, CPC subgroups, IPC subgroups (see EAST history for search strategy)	5/23/2017	ERS
Inventor search in DAV	5/24/2017	ERS

INTERFERENCE SEARCH

US Class/ CPC Symbol	US Subclass / CPC Group	Date	Examiner

Voltage, LLC
EX1021-269

EAST Search History

EAST Search History (Prior Art)

Ref #	Hits	Search Query	DBs	Default Operator	Plurals	Time Stamp
S119	17569	52/173.3 or 136/243-265.ccls.	US-PGPUB; USPAT	AND	ON	2013/07/16 14:53
S120	1134	52/173.3	US-PGPUB; USPAT	AND	ON	2013/07/16 14:54
S121	864	52/173.3.ccls.	US-PGPUB; USPAT	AND	ON	2013/07/16 14:54
S122	17612	S119 or S120 or S121	US-PGPUB; USPAT	AND	ON	2013/07/16 14:54
S123	15	S122 and (((double or two) near3 core) with cable)	US-PGPUB; USPAT	AND	ON	2013/07/16 14:54
S124	1	S122 and (((dual) near3 core) with cable)	US-PGPUB; USPAT	AND	ON	2013/07/16 15:02
S125	62	S122 and (coaxial with cable)	US-PGPUB; USPAT	AND	ON	2013/07/16 15:02
S126	62	S125 not S123	US-PGPUB; USPAT	AND	ON	2013/07/16 15:02
S127	6	S122 and (((double or two) near3 core) with wire)	US-PGPUB; USPAT	AND	ON	2013/07/16 15:04
S128	13	S122 and (coaxial with wire)	US-PGPUB; USPAT	AND	ON	2013/07/16 15:05
S129	1204	S120 or S121	US-PGPUB; USPAT	AND	ON	2013/07/16 15:06
S130	725	S129 and parallel	US-PGPUB; USPAT	AND	ON	2013/07/16 15:06
S131	452	S130 and module	US-PGPUB; USPAT	AND	ON	2013/07/16 15:06
S132	579	S129 and (cable or wire)	US-PGPUB; USPAT	AND	ON	2013/07/16 15:06
S136	208	S129 and (cell with (parallel or series))	US-PGPUB; USPAT	AND	ON	2013/07/16 15:07
S137	137	S136 and (cable or wire)	US-PGPUB; USPAT	AND	ON	2013/07/16 15:07
S169	1515	h01l31/0422.cpc.	US-PGPUB; USPAT; USOCR	AND	ON	2014/01/16 10:57
S170	122	h01l31/0424.cpc.	US-PGPUB; USPAT; USOCR	AND	ON	2014/01/16 10:57
S171	837	h01l31/0482.cpc.	US-PGPUB; USPAT; USOCR	AND	ON	2014/01/16 10:57
S172	96	h01l31/0484.cpc.	US-PGPUB; USPAT; USOCR	AND	ON	2014/01/16 10:58
S173	1146	h01l31/05.cpc.	US-PGPUB; USPAT; USOCR	AND	ON	2014/01/16 10:58
S174	3216	S169 or S170 or S171 or S172 or S173	US-PGPUB; USPAT; USOCR	AND	ON	2014/01/16 10:58
S175	618	S174 and ((long or length) with (cabl$3 or wir$3 or interconnect$3))	US-PGPUB; USPAT; USOCR	AND	ON	2014/01/16 10:59

S176	436	S174 and ((long or length) with (cabl$3 or wir$3))	US-PGPUB; USPAT; USOCR	AND	ON	2014/01/16 10:59
S177	292	S175 and box	US-PGPUB; USPAT; USOCR	AND	ON	2014/01/16 11:00
S178	71	S174 and (((long or length) with (cabl$3 or wir$3 or interconnect$3)) same box)	US-PGPUB; USPAT; USOCR	AND	ON	2014/01/16 11:00
S183	292	S174 and (((long or length) with (cabl$3 or wir$3 or interconnect$3)) and box)	US-PGPUB; USPAT; USOCR	AND	ON	2014/01/16 11:53
S184	221	S183 not S178	US-PGPUB; USPAT; USOCR	AND	ON	2014/01/16 11:53
S185	531	S174 and (((long or length) with (cabl$3 or wir$3 or interconnect$3)) and differ$3)	US-PGPUB; USPAT; USOCR	AND	ON	2014/01/16 13:08
S186	29	S174 and (((long or length) with (cabl$3 or wir$3 or interconnect$3)) with differ$3)	US-PGPUB; USPAT; USOCR	AND	ON	2014/01/16 13:08
S196	1598	e04d003/40.ipc.	EPO; JPO; DERWENT	AND	ON	2014/01/16 13:52
S197	173	e04d3/40.ipc.	EPO; JPO; DERWENT	AND	ON	2014/01/16 13:52
S200	173	e04d003/40.ipcr.	EPO; JPO; DERWENT	AND	ON	2014/01/16 13:53
S202	173	e04d003/40.ipcr.	EPO; JPO	AND	ON	2014/01/16 13:53
S203	1598	e04d003/40.ipc.	EPO; JPO	AND	ON	2014/01/16 13:53
S204	173	e04d3/40.ipc.	EPO; JPO	AND	ON	2014/01/16 13:53
S206	173	e04d3/40.ipcr.	EPO; JPO	AND	ON	2014/01/16 13:53
S207	173	e04d003/40.ipcr.	EPO; JPO	AND	ON	2014/01/16 13:53
S208	1598	e04d003/40.ipc.	EPO; JPO	AND	ON	2014/01/16 13:53
S209	2577	e04d013/18.ipc.	EPO; JPO	AND	ON	2014/01/16 13:54
S210	707	e04d013/18.ipcr.	EPO; JPO	AND	ON	2014/01/16 13:54
S221	4843	h01l31/042.ipc.	EPO; JPO	AND	ON	2014/01/16 13:55
S223	4843	h01l31/042.ipcr.	EPO; JPO	AND	ON	2014/01/16 13:55
S224	9191	h01l031/042.ipc.	EPO; JPO	AND	ON	2014/01/16 13:55
S225	221	h01l031/05.ipc.	EPO; JPO	AND	ON	2014/01/16 13:55
S229	221	h01l031/05.ipc.	EPO; JPO	AND	ON	2014/01/16 13:56
S230	48	S229 and (wir$3 or cabl$3)	EPO; JPO	AND	ON	2014/01/16 13:56
S237	2577	S209 or S210	EPO; JPO	AND	ON	2014/01/16 14:20
S238	2569	S237 not S229	EPO; JPO	AND	ON	2014/01/16 14:24
S239	300	S238 and (wir$3 or cabl$3)	EPO; JPO	AND	ON	2014/01/16

						14:25
S248	201	e04d3/40.cpc.	US-PGPUB; USPAT; DERWENT	AND	ON	2014/01/17 08:23
S249	193	e04d3/40.cpc.	US-PGPUB; USPAT	AND	ON	2014/01/17 08:23
S250	1515	h01l31/0422.cpc.	US-PGPUB; USPAT; USOCR	AND	ON	2014/01/17 08:24
S251	122	h01l31/0424.cpc.	US-PGPUB; USPAT; USOCR	AND	ON	2014/01/17 08:24
S252	837	h01l31/0482.cpc.	US-PGPUB; USPAT; USOCR	AND	ON	2014/01/17 08:24
S253	96	h01l31/0484.cpc.	US-PGPUB; USPAT; USOCR	AND	ON	2014/01/17 08:24
S254	1146	h01l31/05.cpc.	US-PGPUB; USPAT; USOCR	AND	ON	2014/01/17 08:24
S255	3216	S250 or S251 or S252 or S253 or S254	US-PGPUB; USPAT; USOCR	AND	ON	2014/01/17 08:24
S256	71	S255 and (((long or length) with (cabl$3 or wir$3 or interconnect$3)) same box)	US-PGPUB; USPAT; USOCR	AND	ON	2014/01/17 08:24
S257	193	S249 not S256	US-PGPUB; USPAT	AND	ON	2014/01/17 08:24
S258	15	S249 and (wir$3 or cabl$3)	US-PGPUB; USPAT	AND	ON	2014/01/17 08:24
S259	71	S249 and (wir$3 or cabl$3 or interconnect$3)	US-PGPUB; USPAT	AND	ON	2014/01/17 08:24
S260	11	S249 and (solar or photovoltaic or photoelectric)	US-PGPUB; USPAT	AND	ON	2014/01/17 08:25
S261	353	e04d1/30.cpc.	US-PGPUB; USPAT; DERWENT	AND	ON	2014/01/17 08:25
S262	68	S261 and (solar or photovoltaic or photoelectric)	US-PGPUB; USPAT	AND	ON	2014/01/17 08:25
S297	134	h01l31/02013.cpc.	US-PGPUB; USPAT; USOCR	AND	ON	2014/07/01 14:31
S300	451	h01l31/02008.cpc.	US-PGPUB; USPAT; USOCR	AND	ON	2014/07/01 14:53
S301	412	S300 and (cabl$3 or wir$3 or lead$1)	US-PGPUB; USPAT; USOCR	AND	ON	2014/07/01 14:54
S302	382	S301 and (module or panel)	US-PGPUB; USPAT; USOCR	AND	ON	2014/07/01 14:54
S303	88	S302 and (groove)	US-PGPUB; USPAT; USOCR	AND	ON	2014/07/01 14:54
S304	222	S302 and length	US-PGPUB; USPAT; USOCR	AND	ON	2014/07/01 14:54
S305	66	S300 and ((cabl$3 or wir$3 or lead$1) with length)	US-PGPUB; USPAT; USOCR	AND	ON	2014/07/01 14:54
S306	132	S303 or S305	US-PGPUB; USPAT; USOCR	AND	ON	2014/07/01 14:54
S307	129	S306 not S297	US-PGPUB; USPAT; USOCR	AND	ON	2014/07/01 14:55
S308	64	S302 and (recess)	US-PGPUB; USPAT; USOCR	AND	ON	2014/07/01 15:07
S315	762	h01l31/02021.cpc.	US-PGPUB; USPAT; USOCR	AND	ON	2014/07/01 15:25
S316	589	S315 and (cabl$3 or wir$3 or lead$1)	US-PGPUB; USPAT; USOCR	AND	ON	2014/07/01 15:25
S317	663	S315 and (module or panel)	US-PGPUB; USPAT;	AND	ON	2014/07/01

			USOCR			15:25
S318	63	S315 and (groove or recess)	US-PGPUB; USPAT; USOCR	AND	ON	2014/07/01 15:25
S319	41	S318 and S316 and S317	US-PGPUB; USPAT; USOCR	AND	ON	2014/07/01 15:25
S320	116	h01l31/0201.cpc.	US-PGPUB; USPAT; USOCR	AND	ON	2014/07/01 15:30
S321	1716	h01l31/0422.cpc.	US-PGPUB; USPAT; USOCR	AND	ON	2014/07/01 15:37
S322	174	h01l31/0424.cpc.	US-PGPUB; USPAT; USOCR	AND	ON	2014/07/01 15:37
S323	921	h01l31/0482.cpc.	US-PGPUB; USPAT; USOCR	AND	ON	2014/07/01 15:37
S324	140	h01l31/0484.cpc.	US-PGPUB; USPAT; USOCR	AND	ON	2014/07/01 15:37
S325	1028	h01l31/05.cpc.	US-PGPUB; USPAT; USOCR	AND	ON	2014/07/01 15:37
S326	3385	S321 or S322 or S323 or S324 or S325	US-PGPUB; USPAT; USOCR	AND	ON	2014/07/01 15:37
S327	1142	S326 and (groove or recess)	US-PGPUB; USPAT; USOCR	AND	ON	2014/07/01 15:37
S328	869	S327 and (wir$3 or cabl$3 or lead$1)	US-PGPUB; USPAT; USOCR	AND	ON	2014/07/01 15:37
S329	305	S327 and ((wir$3 or cabl$3 or lead$1) same (groove$1 or recess$2))	US-PGPUB; USPAT; USOCR	AND	ON	2014/07/01 15:37
S330	246	S327 and ((wir$3 or cabl$3 or lead$1) same (length))	US-PGPUB; USPAT; USOCR	AND	ON	2014/07/01 15:38
S372	8253	y02e10/46.cpc.	US-PGPUB; USPAT; USOCR; FPRS	AND	ON	2017/05/23 16:04
S373	14	S372 and (recombiner or combiner)	US-PGPUB; USPAT; USOCR; FPRS	AND	ON	2017/05/23 16:04
S374	11062	h02s40/00-38.cpc.	US-PGPUB; USPAT; USOCR; FPRS	AND	ON	2017/05/23 16:05
S375	207	S374 and (combiner or recombiner)	US-PGPUB; USPAT; USOCR; FPRS	AND	ON	2017/05/23 16:05
S376	218	S373 or S375	US-PGPUB; USPAT; USOCR; FPRS	AND	ON	2017/05/23 16:07
S378	19186	S372 or S374	US-PGPUB; USPAT; USOCR; FPRS	AND	ON	2017/05/23 16:31
S379	62	S378 and (overmold$3 or undermold$3)	US-PGPUB; USPAT; USOCR; FPRS	AND	ON	2017/05/23 16:31
S380	1	S378 and (compression adj lug)	US-PGPUB; USPAT; USOCR; FPRS	AND	ON	2017/05/23 16:39
S381	2	S378 and (compression with lug)	US-PGPUB; USPAT; USOCR; FPRS	AND	ON	2017/05/23 16:39
S382	0	S378 and (compress43 with lug)	US-PGPUB; USPAT; USOCR; FPRS	AND	ON	2017/05/23 16:39
S383	5	S378 and (compress$3 with lug)	US-PGPUB; USPAT; USOCR; FPRS	AND	ON	2017/05/23 16:39
S384	236	compression adj lug	US-PGPUB; USPAT; USOCR; FPRS	AND	ON	2017/05/23 16:45
S385	2	S384 and (solar or photovoltaic)	US-PGPUB; USPAT; USOCR; FPRS	AND	ON	2017/05/23 16:45
S386	108	S384 and (cable or wire)	US-PGPUB; USPAT; USOCR; FPRS	AND	ON	2017/05/23 16:45
S390	3078	"1000" mcm wire	US-PGPUB; USPAT;	AND	ON	2017/05/23

			USOCR; EPO; JPO; DERWENT			19:42
S391	4	"1000 mcm wire"	US-PGPUB; USPAT; USOCR; EPO; JPO; DERWENT	AND	ON	2017/05/23 19:42
S392	4	"mcm wire" and gauge	US-PGPUB; USPAT; USOCR; EPO; JPO; DERWENT	AND	ON	2017/05/23 19:42
S393	1500	mcm and gauge	US-PGPUB; USPAT; USOCR; EPO; JPO; DERWENT	AND	ON	2017/05/23 19:43
S394	479	mcm and gauge and wire	US-PGPUB; USPAT; USOCR; EPO; JPO; DERWENT	AND	ON	2017/05/23 19:43
S395	369	S394 and (conduct$3)	US-PGPUB; USPAT; USOCR; EPO; JPO; DERWENT	AND	ON	2017/05/23 19:43
S396	234	S395 and "1000"	US-PGPUB; USPAT; USOCR; EPO; JPO; DERWENT	AND	ON	2017/05/23 19:43
S397	104	mcm same gauge	US-PGPUB; USPAT; USOCR; EPO; JPO; DERWENT	AND	ON	2017/05/23 19:45

5/24/2017 9:15:09 AM
C:\Users\esmith3\Documents\EAST\Workspaces\Grid_interconnects_specifics\14849458_lead_assembly.wsp

IN THE UNITED STATES PATENT AND TRADEMARK OFFICE

In re Application of: Dean Solon
Serial No.: 14/849,458 **Examiner:** Eric R Smith
Filed: 09/09/2015 **Art Unit:** 1757
Confirmation No.: 5067
For: LEAD ASSEMBLY FOR CONNECTING SOLAR PANEL ARRAYS TO INVERTER

Commissioner for Patents
PO Box 1450
Alexandria, VA 22313-1450

Sir:

RESPONSE TO RESTRICTION REQUIREMENT,
INTERVIEW SUMMARY
AND AMENDMENT

This paper responds to the Office Action mailed December 13, 2016.

Applicant requests a 4 month extension of time, thereby broadening the time for response to June 13, 2017. The requisite fee of $1,100.00 is contemporaneously submitted.

In the event an extension of time or other fee is required, Applicant requests that this be considered the requisite petition.

The Commissioner is hereby authorized to charge any fees associated with this case to 506268.

Voltage, LLC
EX1021-275

RESPONSE TO RESTRICTION REQUIREMENT

In response to the Office Action mailed December 13, 2016, Applicant hereby elects:

> **Species A** for a lead assembly comprising a nexus in which two drop lines are joined to a feeder cable at the nexus, encompassing **claims 1-5; 6; 9-16; and 17-18.**

INTERVIEW SUMMARY

Applicant gratefully acknowledges the telephone discussion between Examiner Eric Smith and Attorney Carla Gannon on 5/18/17. Attorney Gannon inquired about amending claims to be commensurate with elected Species A. Examiner Smith indicated that it may not be necessary to amend claims, as he would interpret claims as reading on the elected species. Attorney Gannon stated that she would file amended claims to for purposes of maintaining a "clean" prosecution history.

Voltage, LLC
EX1021-277

AMENDMENTS TO THE CLAIMS

Please amend the claims as follows:

1. **(Currently Amended)** A lead assembly for use in a solar energy installation including:

   A. ~~At least one~~ **A first drop line and a second drop line, said first** drop line terminating in a drop line connector;

   B. At least one feeder cable terminating in a feeder cable connector, said ~~**at least one**~~ **first** drop line and said at least one feeder cable electrically coupled at a nexus;

   C. A means for securing said nexus, said securing means selected from the group consisting of compression lug, soldering, splicing, crimping, and combinations thereof; and

   D. An overmold surrounding said nexus, wherein said lead assembly combines power from a plurality of solar arrays and transmits that power to an inverter in a solar energy installation lacking a combiner box between said solar arrays and said inverter.

2. **(Currently Amended)** The lead assembly of claim 1 wherein said ~~**at least one**~~ **first** drop line includes a section of exposed wire at said nexus.

3. (Original) The lead assembly of claim 2 wherein said at least one feeder cable includes a section of exposed wire at said nexus.

4. (Original) The lead assembly of claim 1 further comprising an undermold positioned between said nexus and said overmold.

5. (Original) The lead assembly of claim 4 wherein said overmold defines at least one aperture.

6. **(Currently Amended)** A solar power system:

A. A first plurality of solar panels electrically coupled by a first wire harness to form a first solar array; ~~and~~

B. **A second plurality of solar panels electrically coupled by a second wire harness to form a second solar array;**

C. A lead assembly including a first drop line electrically connected to said first wire harness, and a feeder cable electrically connected to a component selected from the group consisting of a trunk buss jumper, an inverter, a connection unit, a recombiner, and a disconnect unit, said first drop line and said feeder cable electrically connected at a **first** nexus**[[,]];**

D. A second drop line electrically connected to said second wire harness, said second drop line electrically connected to said feeder cable at a second nexus, wherein the solar power system doesn't include a combiner box upstream of said component.

7. **(Currently Cancelled)**

8. **(Currently Cancelled)**

9. (Original) The solar power system of claim 6 wherein said lead assembly includes an end piece.

10. (Original) The solar power system of claim 6 wherein said first drop line terminates in a drop line connector.

11. (Original) The solar power system of claim 6 wherein said feeder cable terminates in a feeder cable connector.

12. (Original) The solar power system of claim 6 wherein said first drop line includes 18 to 4 gauge wire.

13. (Original) The solar power system of claim 6 wherein said feeder cable includes 6 gauge to 1000MCM wire.

14. (Original) The solar power system of claim 6 wherein said first nexus is surrounded by a compression lug.

15. (Original) The solar power system of claim 14 wherein said compression lug is surrounded by an undermold.

16. (Original) The solar power system of claim 15 wherein said undermold is surrounded by an overmold.

17. **(Currently Amended)** A method of constructing a solar power installation including the steps of:

A. Connecting a **first** plurality of solar panels to a **first** wire harness to form a **first** solar array;

B. Connecting said **first** wire harness to the **first** drop line of a lead assembly;

C. **Connecting a second plurality of solar panels to a second wire harness to form a second solar array;**

D. Connecting said second wire harness to the second drop line of said lead assembly; and

E. Electrically coupling said lead assembly to an inverter without electrically coupling to a combiner box.

18. (Original) The method of claim 17 wherein said step of electrically coupling said lead assembly to an inverter includes the steps of electrically coupling a feeder cable to said inverter.

REMARKS

With respect to the Response to Restriction Requirement, this election is made without traverse. Applicant notes that FIG. 48 has a single drop line, and therefore would be part of Species A.

With respect to the Amendments to the Claims, claims 7 and 8 have been cancelled, with the subject matter of those claims introduced into claim 6. Also, claims 1; 6 and 17 have been amended. Accordingly, claims 1-5; 6; 9-16; and 17-18 are currently pending, with no claims currently allowed. All amendments are offered so claims pertain to elected Species A. No new matter has been introduced.

Respectfully submitted,

/Carla L. Gannon, 56,358/

Carla L. Gannon
Registration No. 56,358
Carla Gannon Law
8903 E. Oak Island Dr., Suite 9
Oak Island, NC 28465
336-543-3797
cgannon@carlagannonlaw.com

Date: May 18, 2017
File No. SHOALS-59

Voltage, LLC
EX1021-282

Electronic Patent Application Fee Transmittal

Application Number:	14849458
Filing Date:	09-Sep-2015
Title of Invention:	LEAD ASSEMBLY FOR CONNECTING SOLAR PANEL ARRAYS TO INVERTER
First Named Inventor/Applicant Name:	Dean Solon
Filer:	Carla L. Gannon/Donna Braam
Attorney Docket Number:	SHOALS-59

Filed as Small Entity

Filing Fees for Utility under 35 USC 111(a)

Description	Fee Code	Quantity	Amount	Sub-Total in USD($)
Basic Filing:				
Pages:				
Claims:				
Miscellaneous-Filing:				
Petition:				
Patent-Appeals-and-Interference:				
Post-Allowance-and-Post-Issuance:				
Extension-of-Time:				

Description	Fee Code	Quantity	Amount	Sub-Total in USD($)
Extension - 4 months with $0 paid	2254	1	1100	1100
Miscellaneous:				
			Total in USD ($)	**1100**

Electronic Acknowledgement Receipt

EFS ID:	29246086
Application Number:	14849458
International Application Number:	
Confirmation Number:	5067
Title of Invention:	LEAD ASSEMBLY FOR CONNECTING SOLAR PANEL ARRAYS TO INVERTER
First Named Inventor/Applicant Name:	Dean Solon
Customer Number:	57825
Filer:	Carla L. Gannon/Donna Braam
Filer Authorized By:	Carla L. Gannon
Attorney Docket Number:	SHOALS-59
Receipt Date:	18-MAY-2017
Filing Date:	09-SEP-2015
Time Stamp:	12:26:43
Application Type:	Utility under 35 USC 111(a)

Payment information:

Submitted with Payment	yes
Payment Type	CARD
Payment was successfully received in RAM	$1100
RAM confirmation Number	051817INTEFSW12301400
Deposit Account	
Authorized User	

The Director of the USPTO is hereby authorized to charge indicated fees and credit any overpayment as follows:

File Listing:

Document Number	Document Description	File Name	File Size(Bytes)/ Message Digest	Multi Part /.zip	Pages (if appl.)
1	Response to Election / Restriction Filed	ResponseToRR_SHOALS-59.pdf	33952 abb6b6446892d44723c4a097f632e7569aea5f42	no	8
Warnings:					
Information:					
2	Fee Worksheet (SB06)	fee-info.pdf	30347 3576cf33bdc28188238d5f059f444c7aa58d8b40	no	2
Warnings:					
Information:					
		Total Files Size (in bytes):	64299		

This Acknowledgement Receipt evidences receipt on the noted date by the USPTO of the indicated documents, characterized by the applicant, and including page counts, where applicable. It serves as evidence of receipt similar to a Post Card, as described in MPEP 503.

New Applications Under 35 U.S.C. 111
If a new application is being filed and the application includes the necessary components for a filing date (see 37 CFR 1.53(b)-(d) and MPEP 506), a Filing Receipt (37 CFR 1.54) will be issued in due course and the date shown on this Acknowledgement Receipt will establish the filing date of the application.
National Stage of an International Application under 35 U.S.C. 371
If a timely submission to enter the national stage of an international application is compliant with the conditions of 35 U.S.C. 371 and other applicable requirements a Form PCT/DO/EO/903 indicating acceptance of the application as a national stage submission under 35 U.S.C. 371 will be issued in addition to the Filing Receipt, in due course.
New International Application Filed with the USPTO as a Receiving Office
If a new international application is being filed and the international application includes the necessary components for an international filing date (see PCT Article 11 and MPEP 1810), a Notification of the International Application Number and of the International Filing Date (Form PCT/RO/105) will be issued in due course, subject to prescriptions concerning national security, and the date shown on this Acknowledgement Receipt will establish the international filing date of the application.

PTO/SB/06 (09-11)
Approved for use through 1/31/2014. OMB 0651-0032
U.S. Patent and Trademark Office; U.S. DEPARTMENT OF COMMERCE
Under the Paperwork Reduction Act of 1995, no persons are required to respond to a collection of information unless it displays a valid OMB control number.

PATENT APPLICATION FEE DETERMINATION RECORD

Substitute for Form PTO-875

Application or Docket Number	Filing Date	
14/849,458	09/09/2015	☐ To be Mailed

ENTITY: ☐ LARGE ☒ SMALL ☐ MICRO

APPLICATION AS FILED – PART I

FOR	(Column 1) NUMBER FILED	(Column 2) NUMBER EXTRA	RATE ($)	FEE ($)
☐ BASIC FEE (37 CFR 1.16(a), (b), or (c))	N/A	N/A	N/A	
☐ SEARCH FEE (37 CFR 1.16(k), (i), or (m))	N/A	N/A	N/A	
☐ EXAMINATION FEE (37 CFR 1.16(o), (p), or (q))	N/A	N/A	N/A	
TOTAL CLAIMS (37 CFR 1.16(i))	minus 20 =	*	x $ =	
INDEPENDENT CLAIMS (37 CFR 1.16(h))	minus 3 =	*	x $ =	
☐ APPLICATION SIZE FEE (37 CFR 1.16(s))	If the specification and drawings exceed 100 sheets of paper, the application size fee due is $310 ($155 for small entity) for each additional 50 sheets or fraction thereof. See 35 U.S.C. 41(a)(1)(G) and 37 CFR 1.16(s).			
☐ MULTIPLE DEPENDENT CLAIM PRESENT (37 CFR 1.16(j))				
* If the difference in column 1 is less than zero, enter "0" in column 2.			TOTAL	

APPLICATION AS AMENDED – PART II

AMENDMENT

05/18/2017	(Column 1) CLAIMS REMAINING AFTER AMENDMENT		(Column 2) HIGHEST NUMBER PREVIOUSLY PAID FOR	(Column 3) PRESENT EXTRA	RATE ($)	ADDITIONAL FEE ($)
Total (37 CFR 1.16(i))	* 16	Minus	** 20	= 0	x $40 =	0
Independent (37 CFR 1.16(h))	* 3	Minus	***3	= 0	x $210 =	0
☐ Application Size Fee (37 CFR 1.16(s))						
☐ FIRST PRESENTATION OF MULTIPLE DEPENDENT CLAIM (37 CFR 1.16(j))						
					TOTAL ADD'L FEE	0

AMENDMENT

	(Column 1) CLAIMS REMAINING AFTER AMENDMENT		(Column 2) HIGHEST NUMBER PREVIOUSLY PAID FOR	(Column 3) PRESENT EXTRA	RATE ($)	ADDITIONAL FEE ($)
Total (37 CFR 1.16(i))	*	Minus	**	=	x $ =	
Independent (37 CFR 1.16(h))	*	Minus	***	=	x $ =	
☐ Application Size Fee (37 CFR 1.16(s))						
☐ FIRST PRESENTATION OF MULTIPLE DEPENDENT CLAIM (37 CFR 1.16(j))						
					TOTAL ADD'L FEE	

* If the entry in column 1 is less than the entry in column 2, write "0" in column 3.
** If the "Highest Number Previously Paid For" IN THIS SPACE is less than 20, enter "20".
*** If the "Highest Number Previously Paid For" IN THIS SPACE is less than 3, enter "3".
The "Highest Number Previously Paid For" (Total or Independent) is the highest number found in the appropriate box in column 1.

LIE
TRINA STEPTOE

This collection of information is required by 37 CFR 1.16. The information is required to obtain or retain a benefit by the public which is to file (and by the USPTO to process) an application. Confidentiality is governed by 35 U.S.C. 122 and 37 CFR 1.14. This collection is estimated to take 12 minutes to complete, including gathering, preparing, and submitting the completed application form to the USPTO. Time will vary depending upon the individual case. Any comments on the amount of time you require to complete this form and/or suggestions for reducing this burden, should be sent to the Chief Information Officer, U.S. Patent and Trademark Office, U.S. Department of Commerce, P.O. Box 1450, Alexandria, VA 22313-1450. DO NOT SEND FEES OR COMPLETED FORMS TO THIS ADDRESS. **SEND TO: Commissioner for Patents, P.O. Box 1450, Alexandria, VA 22313-1450.**
If you need assistance in completing the form, call 1-800-PTO-9199 and select option 2.

UNITED STATES PATENT AND TRADEMARK OFFICE

UNITED STATES DEPARTMENT OF COMMERCE
United States Patent and Trademark Office
Address: COMMISSIONER FOR PATENTS
P.O. Box 1450
Alexandria, Virginia 22313-1450
www.uspto.gov

APPLICATION NO.	FILING DATE	FIRST NAMED INVENTOR	ATTORNEY DOCKET NO.	CONFIRMATION NO.
14/849,458	09/09/2015	Dean Solon	SHOALS-59	5067

57825 7590 12/13/2016
CARLA GANNON LAW
Carla L. Gannon, Esq.
8903 E. Oak Island Dr.
Suite 9
Oak Island, NC 28465

EXAMINER
SMITH, ERIC R

ART UNIT	PAPER NUMBER
1757	

NOTIFICATION DATE	DELIVERY MODE
12/13/2016	ELECTRONIC

Please find below and/or attached an Office communication concerning this application or proceeding.

The time period for reply, if any, is set in the attached communication.

Notice of the Office communication was sent electronically on above-indicated "Notification Date" to the following e-mail address(es):

cgannon@carlagannonlaw.com
carlagannon@yahoo.com
docketing@carlagannonlaw.com

Voltage, LLC
EX1021-288

Office Action Summary	Application No. 14/849,458	Applicant(s) SOLON, DEAN	
	Examiner ERIC R. SMITH	Art Unit 1757	AIA (First Inventor to File) Status Yes

-- The MAILING DATE of this communication appears on the cover sheet with the correspondence address --

Period for Reply

A SHORTENED STATUTORY PERIOD FOR REPLY IS SET TO EXPIRE 2 MONTHS FROM THE MAILING DATE OF THIS COMMUNICATION.

- Extensions of time may be available under the provisions of 37 CFR 1.136(a). In no event, however, may a reply be timely filed after SIX (6) MONTHS from the mailing date of this communication.
- If NO period for reply is specified above, the maximum statutory period will apply and will expire SIX (6) MONTHS from the mailing date of this communication.
- Failure to reply within the set or extended period for reply will, by statute, cause the application to become ABANDONED (35 U.S.C. § 133). Any reply received by the Office later than three months after the mailing date of this communication, even if timely filed, may reduce any earned patent term adjustment. See 37 CFR 1.704(b).

Status

1)☒ Responsive to communication(s) filed on *4/7/2016*.

☐ A declaration(s)/affidavit(s) under **37 CFR 1.130(b)** was/were filed on _____.

2a)☐ This action is **FINAL**. 2b)☐ This action is non-final.

3)☐ An election was made by the applicant in response to a restriction requirement set forth during the interview on _____; the restriction requirement and election have been incorporated into this action.

4)☐ Since this application is in condition for allowance except for formal matters, prosecution as to the merits is closed in accordance with the practice under *Ex parte Quayle*, 1935 C.D. 11, 453 O.G. 213.

Disposition of Claims*

5)☒ Claim(s) *1-18* is/are pending in the application.

5a) Of the above claim(s) _____ is/are withdrawn from consideration.

6)☐ Claim(s) _____ is/are allowed.

7)☐ Claim(s) _____ is/are rejected.

8)☐ Claim(s) _____ is/are objected to.

9)☒ Claim(s) *1-18* are subject to restriction and/or election requirement.

* If any claims have been determined allowable, you may be eligible to benefit from the **Patent Prosecution Highway** program at a participating intellectual property office for the corresponding application. For more information, please see http://www.uspto.gov/patents/init_events/pph/index.jsp or send an inquiry to PPHfeedback@uspto.gov.

Application Papers

10)☐ The specification is objected to by the Examiner.

11)☐ The drawing(s) filed on _____ is/are: a)☐ accepted or b)☐ objected to by the Examiner.

Applicant may not request that any objection to the drawing(s) be held in abeyance. See 37 CFR 1.85(a).

Replacement drawing sheet(s) including the correction is required if the drawing(s) is objected to. See 37 CFR 1.121(d).

Priority under 35 U.S.C. § 119

12)☐ Acknowledgment is made of a claim for foreign priority under 35 U.S.C. § 119(a)-(d) or (f).

Certified copies:

a)☐ All b)☐ Some** c)☐ None of the:

1.☐ Certified copies of the priority documents have been received.

2.☐ Certified copies of the priority documents have been received in Application No. _____.

3.☐ Copies of the certified copies of the priority documents have been received in this National Stage application from the International Bureau (PCT Rule 17.2(a)).

** See the attached detailed Office action for a list of the certified copies not received.

Attachment(s)

1) ☐ Notice of References Cited (PTO-892)

2) ☐ Information Disclosure Statement(s) (PTO/SB/08a and/or PTO/SB/08b) Paper No(s)/Mail Date _____.

3) ☐ Interview Summary (PTO-413) Paper No(s)/Mail Date. _____ .

4) ☐ Other: _____.

Voltage, LLC
EX1021-289

The present application, filed on or after March 16, 2013, is being examined under the first inventor to file provisions of the AIA.

DETAILED ACTION

Election/Restrictions

This application contains claims directed to the following patentably distinct species

A) A lead assembly comprising a nexus in which two drop lines are joined to a feeder cable at the nexus (shown in Figs. 29, 31-38, 47-52)

B) A lead assembly comprising a nexus in which on drop line is joined to a feeder cable at the nexus (shown in Figs. 5-8, 27, 28, 30, 39-46)

The species are independent or distinct because they represent mutually exclusive embodiments of the invention. In addition, these species are not obvious variants of each other based on the current record.

Applicant is required under 35 U.S.C. 121 to elect a single disclosed species, or a single grouping of patentably indistinct species, for prosecution on the merits to which the claims shall be restricted if no generic claim is finally held to be allowable. Currently, claims 1-6, 9-18 are generic.

There is a search and/or examination burden for the patentably distinct species as set forth above because at least the following reason(s) apply:

(a) the inventions have acquired a separate status in the art due to their recognized divergent subject matter;

(b) the inventions require a different field of search (for example, searching different classes/subclasses or electronic resources, or employing different search queries);

(c) the prior art applicable to one invention would not likely be applicable to another invention.

Applicant is advised that the reply to this requirement to be complete must include (i) an election of a species to be examined even though the requirement may be traversed (37 CFR 1.143) **and (ii) identification of the claims encompassing the elected species or grouping of patentably indistinct species**, including any claims subsequently added. An argument that a claim is allowable or that all claims are generic is considered nonresponsive unless accompanied by an election.

The election may be made with or without traverse. To preserve a right to petition, the election must be made with traverse. If the reply does not distinctly and specifically point out supposed errors in the election of species requirement, the election shall be treated as an election without traverse. Traversal must be presented at the time of election in order to be considered timely. Failure to timely traverse the requirement will result in the loss of right to petition under 37 CFR 1.144. If claims are added after the election, applicant must indicate which of these claims are readable on the elected species or grouping of patentably indistinct species.

Should applicant traverse on the ground that the species, or groupings of patentably indistinct species from which election is required, are not patentably distinct, applicant should submit evidence or identify such evidence now of record showing them to be obvious variants or clearly admit on the record that this is the case. In either instance, if the examiner finds one of the species unpatentable over the prior art, the evidence or admission may be used in a rejection under 35 U.S.C. 103 or pre-AIA 35 U.S.C. 103(a) of the other species.

Upon the allowance of a generic claim, applicant will be entitled to consideration of claims to additional species which depend from or otherwise require all the limitations of an allowable generic claim as provided by 37 CFR 1.141.

Any inquiry concerning this communication or earlier communications from the examiner should be directed to ERIC R. SMITH whose telephone number is (571)270-7186. The examiner can normally be reached on Monday-Friday, 8:30-5:00.

If attempts to reach the examiner by telephone are unsuccessful, the examiner's supervisor, Jeffrey Barton can be reached on 571 272 1307. The fax phone number for the organization where this application or proceeding is assigned is 571-273-8300.

Information regarding the status of an application may be obtained from the Patent Application Information Retrieval (PAIR) system. Status information for published applications may be obtained from either Private PAIR or Public PAIR. Status information for unpublished applications is available through Private PAIR only. For more information about the PAIR system, see http://pair-direct.uspto.gov. Should you have questions on access to the Private PAIR system, contact the Electronic Business Center (EBC) at 866-217-9197 (toll-free). If you would like assistance from a USPTO Customer Service Representative or access to the automated information system, call 800-786-9199 (IN USA OR CANADA) or 571-272-1000.

/ERIC R SMITH/
Primary Examiner, Art Unit 1757

IN THE UNITED STATES PATENT AND TRADEMARK OFFICE

In re Application of: Dean Solon
Serial No.: 14/849,458 **Examiner:** TBD
Filed: 09/09/2015 **Art Unit:** 2833
Confirmation No.: 5067
For: LEAD ASSEMBLY FOR CONNECTING SOLAR PANEL ARRAYS TO INVERTER

Commissioner for Patents
PO Box 1450
Alexandria, VA 22313-1450

Sir:

PRELIMINARY AMENDMENT

Applicant respectfully requests that the Claims be amended as set forth below:

Voltage, LLC
EX1021-293

AMENDMENTS TO THE CLAIMS

Please amend the claims as follows:

1. **(Currently Amended)** A lead assembly for use in a solar energy installation including:

   A. At least one drop line terminating in a drop line connector;

   B. At least one feeder cable terminating in a feeder cable connector, said at least one drop line and said at least one feeder cable electrically coupled at a nexus;

   C. A means for securing said nexus, said securing means selected from the group consisting of compression lug, soldering, splicing, crimping, and combinations thereof; and

   D. An overmold surrounding said ~~compression lug~~**nexus**, wherein said lead assembly combines power from a plurality of solar arrays and transmits that power to an inverter in a solar energy installation lacking a combiner box between said solar arrays and said inverter.

2. (Original) The lead assembly of claim 1 wherein said at least one drop line includes a section of exposed wire at said nexus.

3. (Original) The lead assembly of claim 2 wherein said at least one feeder cable includes a section of exposed wire at said nexus.

4. (Original) The lead assembly of claim 1 further comprising an undermold positioned between said nexus and said overmold.

5. (Original) The lead assembly of claim 4 wherein said overmold defines at least one aperture.

Voltage, LLC
EX1021-294

6. (Original) A solar power system:

A. A first plurality of solar panels electrically coupled by a first wire harness to form a first solar array; and

B. A lead assembly including a first drop line electrically connected to said first wire harness, and a feeder cable electrically connected to a component selected from the group consisting of a trunk buss jumper, an inverter, a connection unit, a recombiner, and a disconnect unit, said first drop line and said feeder cable electrically connected at a nexus, wherein the solar power system doesn't include a combiner box upstream of said component.

7. (Original) The solar power system of claim 6 further including:

A. A second plurality of solar panels electrically coupled by a second wire harness to form a second solar array; and

B. A second drop line electrically connected to said second wire harness, said second drop line electrically connected to said feeder cable at a second nexus.

8. (Original) The solar power system of claim 6 wherein said lead assembly has a configuration selected from the group consisting of a single drop line configuration and a dual drop line configuration.

9. (Original) The solar power system of claim 6 wherein said lead assembly includes an end piece.

10. (Original) The solar power system of claim 6 wherein said first drop line terminates in a drop line connector.

11. (Original) The solar power system of claim 6 wherein said feeder cable terminates in a feeder cable connector.

12. (Original) The solar power system of claim 6 wherein said first drop line includes 18 to 4 gauge wire.

13. (Original) The solar power system of claim 6 wherein said feeder cable includes 6 gauge to 1000MCM wire.

14. (Original) The solar power system of claim 6 wherein said first nexus is surrounded by a compression lug.

15. (Original) The solar power system of claim 14 wherein said compression lug is surrounded by an undermold.

16. (Original) The solar power system of claim 15 wherein said undermold is surrounded by an overmold.

17. (Original) A method of constructing a solar power installation including the steps of:

A. Connecting a plurality of solar panels to a wire harness to form a solar array;

B. Connecting said wire harness to the drop line of a lead assembly;

C. Electrically coupling said lead assembly to an inverter without electrically coupling to a combiner box.

18. (Original) The method of claim 17 wherein said step of electrically coupling said lead assembly to an inverter includes the steps of electrically coupling a feeder cable to said inverter.

Remarks

With respect to the Amendments to the Claims, all subject matter was found either explicitly or inherently in the Claims as originally filed. No new matter has been introduced.

Voltage, LLC
EX1021-298

Conclusion

Examination on the merits is respectfully requested. The Examiner is encouraged to contact Attorney Gannon by telephone or email to discuss the case.

Respectfully submitted,

/Carla L. Gannon, 56,358/

Carla L. Gannon
Registration No. 56,358
Carla Gannon Law
8903 E. Oak Island Dr.
Suite 9
Oak Island, NC 28465
336-543-3797
cgannon@carlagannonlaw.com

Date: April 7, 2016
File No.: SHOALS-59

Voltage, LLC
EX1021-299

Electronic Acknowledgement Receipt

EFS ID:	25425413
Application Number:	14849458
International Application Number:	
Confirmation Number:	5067
Title of Invention:	LEAD ASSEMBLY FOR CONNECTING SOLAR PANEL ARRAYS TO INVERTER
First Named Inventor/Applicant Name:	Dean Solon
Customer Number:	57825
Filer:	Carla L. Gannon/Donna Braam
Filer Authorized By:	Carla L. Gannon
Attorney Docket Number:	SHOALS-59
Receipt Date:	07-APR-2016
Filing Date:	09-SEP-2015
Time Stamp:	13:26:36
Application Type:	Utility under 35 USC 111(a)

Payment information:

Submitted with Payment	no

File Listing:

Document Number	Document Description	File Name	File Size(Bytes)/ Message Digest	Multi Part /.zip	Pages (if appl.)
1	Preliminary Amendment	040616PreliminaryAmendment_SHOALS-59.pdf	28581 9425d96b57e2457be86156a3aa2f337ce7f44f34	no	7

Warnings:

Information:

Total Files Size (in bytes):	28581

This Acknowledgement Receipt evidences receipt on the noted date by the USPTO of the indicated documents, characterized by the applicant, and including page counts, where applicable. It serves as evidence of receipt similar to a Post Card, as described in MPEP 503.

New Applications Under 35 U.S.C. 111

If a new application is being filed and the application includes the necessary components for a filing date (see 37 CFR 1.53(b)-(d) and MPEP 506), a Filing Receipt (37 CFR 1.54) will be issued in due course and the date shown on this Acknowledgement Receipt will establish the filing date of the application.

National Stage of an International Application under 35 U.S.C. 371

If a timely submission to enter the national stage of an international application is compliant with the conditions of 35 U.S.C. 371 and other applicable requirements a Form PCT/DO/EO/903 indicating acceptance of the application as a national stage submission under 35 U.S.C. 371 will be issued in addition to the Filing Receipt, in due course.

New International Application Filed with the USPTO as a Receiving Office

If a new international application is being filed and the international application includes the necessary components for an international filing date (see PCT Article 11 and MPEP 1810), a Notification of the International Application Number and of the International Filing Date (Form PCT/RO/105) will be issued in due course, subject to prescriptions concerning national security, and the date shown on this Acknowledgement Receipt will establish the international filing date of the application.

PTO/SB/06 (09-11)
Approved for use through 1/31/2014. OMB 0651-0032
U.S. Patent and Trademark Office; U.S. DEPARTMENT OF COMMERCE
Under the Paperwork Reduction Act of 1995, no persons are required to respond to a collection of information unless it displays a valid OMB control number.

PATENT APPLICATION FEE DETERMINATION RECORD

Substitute for Form PTO-875

Application or Docket Number	Filing Date	
14/849,458	09/09/2015	☐ To be Mailed

ENTITY: ☐ LARGE ☒ SMALL ☐ MICRO

APPLICATION AS FILED – PART I

FOR	(Column 1) NUMBER FILED	(Column 2) NUMBER EXTRA	RATE ($)	FEE ($)
☐ BASIC FEE (37 CFR 1.16(a), (b), or (c))	N/A	N/A	N/A	
☐ SEARCH FEE (37 CFR 1.16(k), (i), or (m))	N/A	N/A	N/A	
☐ EXAMINATION FEE (37 CFR 1.16(o), (p), or (q))	N/A	N/A	N/A	
TOTAL CLAIMS (37 CFR 1.16(i))	minus 20 =	*	x $ =	
INDEPENDENT CLAIMS (37 CFR 1.16(h))	minus 3 =	*	x $ =	
☐ APPLICATION SIZE FEE (37 CFR 1.16(s))	If the specification and drawings exceed 100 sheets of paper, the application size fee due is $310 ($155 for small entity) for each additional 50 sheets or fraction thereof. See 35 U.S.C. 41(a)(1)(G) and 37 CFR 1.16(s).			
☐ MULTIPLE DEPENDENT CLAIM PRESENT (37 CFR 1.16(j))				
* If the difference in column 1 is less than zero, enter "0" in column 2.			TOTAL	

APPLICATION AS AMENDED – PART II

AMENDMENT

04/07/2016	(Column 1) CLAIMS REMAINING AFTER AMENDMENT		(Column 2) HIGHEST NUMBER PREVIOUSLY PAID FOR	(Column 3) PRESENT EXTRA	RATE ($)	ADDITIONAL FEE ($)
Total (37 CFR 1.16(i))	* 18	Minus	** 20	= 0	x $40 =	0
Independent (37 CFR 1.16(h))	* 3	Minus	***3	= 0	x $210 =	0
☐ Application Size Fee (37 CFR 1.16(s))						
☐ FIRST PRESENTATION OF MULTIPLE DEPENDENT CLAIM (37 CFR 1.16(j))						
					TOTAL ADD'L FEE	0

AMENDMENT

	(Column 1) CLAIMS REMAINING AFTER AMENDMENT		(Column 2) HIGHEST NUMBER PREVIOUSLY PAID FOR	(Column 3) PRESENT EXTRA	RATE ($)	ADDITIONAL FEE ($)
Total (37 CFR 1.16(i))	*	Minus	**	=	x $ =	
Independent (37 CFR 1.16(h))	*	Minus	***	=	x $ =	
☐ Application Size Fee (37 CFR 1.16(s))						
☐ FIRST PRESENTATION OF MULTIPLE DEPENDENT CLAIM (37 CFR 1.16(j))						
					TOTAL ADD'L FEE	

* If the entry in column 1 is less than the entry in column 2, write "0" in column 3.

** If the "Highest Number Previously Paid For" IN THIS SPACE is less than 20, enter "20".

*** If the "Highest Number Previously Paid For" IN THIS SPACE is less than 3, enter "3".

The "Highest Number Previously Paid For" (Total or Independent) is the highest number found in the appropriate box in column 1.

LIE
/DEBORAH PORTER/

This collection of information is required by 37 CFR 1.16. The information is required to obtain or retain a benefit by the public which is to file (and by the USPTO to process) an application. Confidentiality is governed by 35 U.S.C. 122 and 37 CFR 1.14. This collection is estimated to take 12 minutes to complete, including gathering, preparing, and submitting the completed application form to the USPTO. Time will vary depending upon the individual case. Any comments on the amount of time you require to complete this form and/or suggestions for reducing this burden, should be sent to the Chief Information Officer, U.S. Patent and Trademark Office, U.S. Department of Commerce, P.O. Box 1450, Alexandria, VA 22313-1450. DO NOT SEND FEES OR COMPLETED FORMS TO THIS ADDRESS. **SEND TO: Commissioner for Patents, P.O. Box 1450, Alexandria, VA 22313-1450.**

If you need assistance in completing the form, call 1-800-PTO-9199 and select option 2.

UNITED STATES PATENT AND TRADEMARK OFFICE

UNITED STATES DEPARTMENT OF COMMERCE
United States Patent and Trademark Office
Address: COMMISSIONER FOR PATENTS
P.O. Box 1450
Alexandria, Virginia 22313-1450
www.uspto.gov

APPLICATION NUMBER	FILING OR 371(C) DATE	FIRST NAMED APPLICANT	ATTY. DOCKET NO./TITLE
14/849,458	09/09/2015	Dean Solon	SHOALS-59

CONFIRMATION NO. 5067

PUBLICATION NOTICE

OC000000081317749

57825
CARLA GANNON LAW
Carla L. Gannon, Esq.
8903 E. Oak Island Dr.
Suite 9
Oak Island, NC 28465

Title:LEAD ASSEMBLY FOR CONNECTING SOLAR PANEL ARRAYS TO INVERTER

Publication No.US-2016-0072431-A1
Publication Date:03/10/2016

NOTICE OF PUBLICATION OF APPLICATION

The above-identified application will be electronically published as a patent application publication pursuant to 37 CFR 1.211, et seq. The patent application publication number and publication date are set forth above.

The publication may be accessed through the USPTO's publically available Searchable Databases via the Internet at www.uspto.gov. The direct link to access the publication is currently http://www.uspto.gov/patft/.

The publication process established by the Office does not provide for mailing a copy of the publication to applicant. A copy of the publication may be obtained from the Office upon payment of the appropriate fee set forth in 37 CFR 1.19(a)(1). Orders for copies of patent application publications are handled by the USPTO's Office of Public Records. The Office of Public Records can be reached by telephone at (703) 308-9726 or (800) 972-6382, by facsimile at (703) 305-8759, by mail addressed to the United States Patent and Trademark Office, Office of Public Records, Alexandria, VA 22313-1450 or via the Internet.

In addition, information on the status of the application, including the mailing date of Office actions and the dates of receipt of correspondence filed in the Office, may also be accessed via the Internet through the Patent Electronic Business Center at www.uspto.gov using the public side of the Patent Application Information and Retrieval (PAIR) system. The direct link to access this status information is currently http://pair.uspto.gov/. Prior to publication, such status information is confidential and may only be obtained by applicant using the private side of PAIR.

Further assistance in electronically accessing the publication, or about PAIR, is available by calling the Patent Electronic Business Center at 1-866-217-9197.

Office of Data Managment, Application Assistance Unit (571) 272-4000, or (571) 272-4200, or 1-888-786-0101

Voltage, LLC
EX1021-303

IN THE UNITED STATES PATENT AND TRADEMARK OFFICE

In re Application of: Dean Solon
Serial No.: 14/849,458 **Examiner:** TBD
Filed: 09/09/2015 **Art Unit:** 2833
Confirmation No.: 5067
For: LEAD ASSEMBLY FOR CONNECTING SOLAR PANEL ARRAYS TO INVERTER

Commissioner for Patents
PO Box 1450
Alexandria, VA 22313-1450

Sir:

PRELIMINARY AMENDMENT

Applicant respectfully requests that the Specification be amended as set forth below:

Voltage, LLC
EX1021-304

AMENDMENTS TO THE SPECIFICATION

Please amend the paragraph starting on page 1, line 21 as follows:

The configuration of FIG. 1 has been simplified in recent years by the wire harness of US Patent 8,604,342 which issued 12/10/13; and US Applications 14/057,089 filed 10/18/13; ~~**14/057,089 filed 10/18/13;**~~ and 14/296,726 filed 6/5/14, all of which are hereby incorporated by reference. More specifically, as shown in FIG. 2, wire harnesses 34 connect multiple solar panels 30 in an array 32, so each array has a single input via wire harness 34 into the combiner box. This has drastically reduced the number of connections going into a combiner box, which is safer, more reliable, easier to install, maintain and troubleshoot, and saves money over the conventional configuration of FIG. 1.

Please amend the paragraph starting on page 3, line 19 as follows:

FIG. 9 depicts a configuration where a lead assembly has a **single** ~~**dual**~~ drop line as may be appropriate in use with crystalline panels;

Remarks

With respect to the Amendments to the Specification, all subject matter was found either explicitly or inherently in the specification and/or drawings as originally filed. No new matter has been introduced.

Voltage, LLC
EX1021-306

Conclusion

Examination on the merits is respectfully requested. The Examiner is encouraged to contact Attorney Gannon by telephone or email to discuss the case.

Respectfully submitted,

/Carla L. Gannon, 56,358/

Carla L. Gannon
Registration No. 56,358
Carla Gannon Law
8903 E. Oak Island Dr.
Suite 9
Oak Island, NC 28465
336-543-3797
cgannon@carlagannonlaw.com

Date: November 3, 2015
File No.: SHOALS-59

Voltage, LLC
EX1021-307

Electronic Acknowledgement Receipt

EFS ID:	23968302
Application Number:	14849458
International Application Number:	
Confirmation Number:	5067
Title of Invention:	LEAD ASSEMBLY FOR CONNECTING SOLAR PANEL ARRAYS TO INVERTER
First Named Inventor/Applicant Name:	Dean Solon
Customer Number:	57825
Filer:	Carla L. Gannon/Donna Braam
Filer Authorized By:	Carla L. Gannon
Attorney Docket Number:	SHOALS-59
Receipt Date:	03-NOV-2015
Filing Date:	09-SEP-2015
Time Stamp:	10:07:31
Application Type:	Utility under 35 USC 111(a)

Payment information:

Submitted with Payment	no

File Listing:

Document Number	Document Description	File Name	File Size(Bytes)/ Message Digest	Multi Part /.zip	Pages (if appl.)
1	Preliminary Amendment	PreliminaryAmendment_SHOALS-59.pdf	21827 eeab355019e26443a14762468589f860ff1a2489	no	4

Warnings:

Information:

Total Files Size (in bytes):	21827

This Acknowledgement Receipt evidences receipt on the noted date by the USPTO of the indicated documents, characterized by the applicant, and including page counts, where applicable. It serves as evidence of receipt similar to a Post Card, as described in MPEP 503.

New Applications Under 35 U.S.C. 111
If a new application is being filed and the application includes the necessary components for a filing date (see 37 CFR 1.53(b)-(d) and MPEP 506), a Filing Receipt (37 CFR 1.54) will be issued in due course and the date shown on this Acknowledgement Receipt will establish the filing date of the application.

National Stage of an International Application under 35 U.S.C. 371
If a timely submission to enter the national stage of an international application is compliant with the conditions of 35 U.S.C. 371 and other applicable requirements a Form PCT/DO/EO/903 indicating acceptance of the application as a national stage submission under 35 U.S.C. 371 will be issued in addition to the Filing Receipt, in due course.

New International Application Filed with the USPTO as a Receiving Office
If a new international application is being filed and the international application includes the necessary components for an international filing date (see PCT Article 11 and MPEP 1810), a Notification of the International Application Number and of the International Filing Date (Form PCT/RO/105) will be issued in due course, subject to prescriptions concerning national security, and the date shown on this Acknowledgement Receipt will establish the international filing date of the application.

PATENT APPLICATION FEE DETERMINATION RECORD

Substitute for Form PTO-875

Application or Docket Number
14/849,458

APPLICATION AS FILED - PART I

FOR	(Column 1) NUMBER FILED	(Column 2) NUMBER EXTRA	SMALL ENTITY RATE($)	SMALL ENTITY FEE($)	OR	OTHER THAN SMALL ENTITY RATE($)	OTHER THAN SMALL ENTITY FEE($)
BASIC FEE (37 CFR 1.16(a), (b), or (c))	N/A	N/A	N/A	70		N/A	
SEARCH FEE (37 CFR 1.16(k), (i), or (m))	N/A	N/A	N/A	300		N/A	
EXAMINATION FEE (37 CFR 1.16(o), (p), or (q))	N/A	N/A	N/A	360		N/A	
TOTAL CLAIMS (37 CFR 1.16(i))	18 minus 20 =	*	x 40 =	0.00	OR		
INDEPENDENT CLAIMS (37 CFR 1.16(h))	3 minus 3 =	*	x 210 =	0.00			
APPLICATION SIZE FEE (37 CFR 1.16(s))	If the specification and drawings exceed 100 sheets of paper, the application size fee due is $310 ($155 for small entity) for each additional 50 sheets or fraction thereof. See 35 U.S.C. 41(a)(1)(G) and 37 CFR 1.16(s).			0.00			
MULTIPLE DEPENDENT CLAIM PRESENT (37 CFR 1.16(j))				0.00			
* If the difference in column 1 is less than zero, enter "0" in column 2.			TOTAL	730		TOTAL	

APPLICATION AS AMENDED - PART II

		(Column 1) CLAIMS REMAINING AFTER AMENDMENT		(Column 2) HIGHEST NUMBER PREVIOUSLY PAID FOR	(Column 3) PRESENT EXTRA	SMALL ENTITY RATE($)	SMALL ENTITY ADDITIONAL FEE($)	OR	OTHER THAN SMALL ENTITY RATE($)	OTHER THAN SMALL ENTITY ADDITIONAL FEE($)
AMENDMENT A	Total (37 CFR 1.16(i))	*	Minus	**	=	x =		OR	x =	
AMENDMENT A	Independent (37 CFR 1.16(h))	*	Minus	***	=	x =		OR	x =	
AMENDMENT A	Application Size Fee (37 CFR 1.16(s))									
AMENDMENT A	FIRST PRESENTATION OF MULTIPLE DEPENDENT CLAIM (37 CFR 1.16(j))							OR		
						TOTAL ADD'L FEE		OR	TOTAL ADD'L FEE	

		(Column 1) CLAIMS REMAINING AFTER AMENDMENT		(Column 2) HIGHEST NUMBER PREVIOUSLY PAID FOR	(Column 3) PRESENT EXTRA	RATE($)	ADDITIONAL FEE($)	OR	RATE($)	ADDITIONAL FEE($)
AMENDMENT B	Total (37 CFR 1.16(i))	*	Minus	**	=	x =		OR	x =	
AMENDMENT B	Independent (37 CFR 1.16(h))	*	Minus	***	=	x =		OR	x =	
AMENDMENT B	Application Size Fee (37 CFR 1.16(s))									
AMENDMENT B	FIRST PRESENTATION OF MULTIPLE DEPENDENT CLAIM (37 CFR 1.16(j))							OR		
						TOTAL ADD'L FEE		OR	TOTAL ADD'L FEE	

* If the entry in column 1 is less than the entry in column 2, write "0" in column 3.
** If the "Highest Number Previously Paid For" IN THIS SPACE is less than 20, enter "20".
*** If the "Highest Number Previously Paid For" IN THIS SPACE is less than 3, enter "3".
The "Highest Number Previously Paid For" (Total or Independent) is the highest found in the appropriate box in column 1.

UNITED STATES PATENT AND TRADEMARK OFFICE

UNITED STATES DEPARTMENT OF COMMERCE
United States Patent and Trademark Office
Address: COMMISSIONER FOR PATENTS
P.O. Box 1450
Alexandria, Virginia 22313-1450
www.uspto.gov

APPLICATION NUMBER	FILING or 371(c) DATE	GRP ART UNIT	FIL FEE REC'D	ATTY.DOCKET.NO	TOT CLAIMS	IND CLAIMS
14/849,458	09/09/2015	2833	730	SHOALS-59	18	3

CONFIRMATION NO. 5067

FILING RECEIPT

OC000000077608013

57825
CARLA GANNON LAW
Carla L. Gannon, Esq.
8903 E. Oak Island Dr.
Suite 9
Oak Island, NC 28465

Date Mailed: 09/24/2015

Receipt is acknowledged of this non-provisional patent application. The application will be taken up for examination in due course. Applicant will be notified as to the results of the examination. Any correspondence concerning the application must include the following identification information: the U.S. APPLICATION NUMBER, FILING DATE, NAME OF APPLICANT, and TITLE OF INVENTION. Fees transmitted by check or draft are subject to collection. Please verify the accuracy of the data presented on this receipt. **If an error is noted on this Filing Receipt, please submit a written request for a Filing Receipt Correction. Please provide a copy of this Filing Receipt with the changes noted thereon. If you received a "Notice to File Missing Parts" for this application, please submit any corrections to this Filing Receipt with your reply to the Notice. When the USPTO processes the reply to the Notice, the USPTO will generate another Filing Receipt incorporating the requested corrections**

Inventor(s)

Dean Solon, Gallatin, TN;

Applicant(s)

Dean Solon, Gallatin, TN;

Power of Attorney: The patent practitioners associated with Customer Number 57825

Domestic Priority data as claimed by applicant

This appln claims benefit of 62/047,773 09/09/2014

Foreign Applications for which priority is claimed (You may be eligible to benefit from the **Patent Prosecution Highway** program at the USPTO. Please see http://www.uspto.gov for more information.) - None.
Foreign application information must be provided in an Application Data Sheet in order to constitute a claim to foreign priority. See 37 CFR 1.55 and 1.76.

Permission to Access - A proper **Authorization to Permit Access to Application by Participating Offices** (PTO/SB/39 or its equivalent) has been received by the USPTO.

If Required, Foreign Filing License Granted: 09/21/2015

The country code and number of your priority application, to be used for filing abroad under the Paris Convention, is **US 14/849,458**

Projected Publication Date: 03/10/2016

Non-Publication Request: No

Early Publication Request: No
**** SMALL ENTITY ****

Voltage, LLC
EX1021-311

Title

LEAD ASSEMBLY FOR CONNECTING SOLAR PANEL ARRAYS TO INVERTER

Preliminary Class

439

Statement under 37 CFR 1.55 or 1.78 for AIA (First Inventor to File) Transition Applications: No

PROTECTING YOUR INVENTION OUTSIDE THE UNITED STATES

Since the rights granted by a U.S. patent extend only throughout the territory of the United States and have no effect in a foreign country, an inventor who wishes patent protection in another country must apply for a patent in a specific country or in regional patent offices. Applicants may wish to consider the filing of an international application under the Patent Cooperation Treaty (PCT). An international (PCT) application generally has the same effect as a regular national patent application in each PCT-member country. The PCT process **simplifies** the filing of patent applications on the same invention in member countries, but **does not result** in a grant of "an international patent" and does not eliminate the need of applicants to file additional documents and fees in countries where patent protection is desired.

Almost every country has its own patent law, and a person desiring a patent in a particular country must make an application for patent in that country in accordance with its particular laws. Since the laws of many countries differ in various respects from the patent law of the United States, applicants are advised to seek guidance from specific foreign countries to ensure that patent rights are not lost prematurely.

Applicants also are advised that in the case of inventions made in the United States, the Director of the USPTO must issue a license before applicants can apply for a patent in a foreign country. The filing of a U.S. patent application serves as a request for a foreign filing license. The application's filing receipt contains further information and guidance as to the status of applicant's license for foreign filing.

Applicants may wish to consult the USPTO booklet, "General Information Concerning Patents" (specifically, the section entitled "Treaties and Foreign Patents") for more information on timeframes and deadlines for filing foreign patent applications. The guide is available either by contacting the USPTO Contact Center at 800-786-9199, or it can be viewed on the USPTO website at http://www.uspto.gov/web/offices/pac/doc/general/index.html.

For information on preventing theft of your intellectual property (patents, trademarks and copyrights), you may wish to consult the U.S. Government website, http://www.stopfakes.gov. Part of a Department of Commerce initiative, this website includes self-help "toolkits" giving innovators guidance on how to protect intellectual property in specific countries such as China, Korea and Mexico. For questions regarding patent enforcement issues, applicants may call the U.S. Government hotline at 1-866-999-HALT (1-866-999-4258).

Voltage, LLC
EX1021-312

LICENSE FOR FOREIGN FILING UNDER

Title 35, United States Code, Section 184

Title 37, Code of Federal Regulations, 5.11 & 5.15

GRANTED

The applicant has been granted a license under 35 U.S.C. 184, if the phrase "IF REQUIRED, FOREIGN FILING LICENSE GRANTED" followed by a date appears on this form. Such licenses are issued in all applications where the conditions for issuance of a license have been met, regardless of whether or not a license may be required as set forth in 37 CFR 5.15. The scope and limitations of this license are set forth in 37 CFR 5.15(a) unless an earlier license has been issued under 37 CFR 5.15(b). The license is subject to revocation upon written notification. The date indicated is the effective date of the license, unless an earlier license of similar scope has been granted under 37 CFR 5.13 or 5.14.

This license is to be retained by the licensee and may be used at any time on or after the effective date thereof unless it is revoked. This license is automatically transferred to any related applications(s) filed under 37 CFR 1.53(d). This license is not retroactive.

The grant of a license does not in any way lessen the responsibility of a licensee for the security of the subject matter as imposed by any Government contract or the provisions of existing laws relating to espionage and the national security or the export of technical data. Licensees should apprise themselves of current regulations especially with respect to certain countries, of other agencies, particularly the Office of Defense Trade Controls, Department of State (with respect to Arms, Munitions and Implements of War (22 CFR 121-128)); the Bureau of Industry and Security, Department of Commerce (15 CFR parts 730-774); the Office of Foreign AssetsControl, Department of Treasury (31 CFR Parts 500+) and the Department of Energy.

NOT GRANTED

No license under 35 U.S.C. 184 has been granted at this time, if the phrase "IF REQUIRED, FOREIGN FILING LICENSE GRANTED" DOES NOT appear on this form. Applicant may still petition for a license under 37 CFR 5.12, if a license is desired before the expiration of 6 months from the filing date of the application. If 6 months has lapsed from the filing date of this application and the licensee has not received any indication of a secrecy order under 35 U.S.C. 181, the licensee may foreign file the application pursuant to 37 CFR 5.15(b).

SelectUSA

The United States represents the largest, most dynamic marketplace in the world and is an unparalleled location for business investment, innovation, and commercialization of new technologies. The U.S. offers tremendous resources and advantages for those who invest and manufacture goods here. Through SelectUSA, our nation works to promote and facilitate business investment. SelectUSA provides information assistance to the international investor community; serves as an ombudsman for existing and potential investors; advocates on behalf of U.S. cities, states, and regions competing for global investment; and counsels U.S. economic development organizations on investment attraction best practices. To learn more about why the United States is the best country in the world to develop technology, manufacture products, deliver services, and grow your business, visit http://www.SelectUSA.gov or call +1-202-482-6800.

Doc Code: PA..
Document Description: Power of Attorney

PTO/AIA/82A (07-13)
Approved for use through 11/30/2014. OMB 0651-0051
U.S. Patent and Trademark Office; U.S. DEPARTMENT OF COMMERCE
Under the Paperwork Reduction Act of 1995, no persons are required to respond to a collection of information unless it displays a valid OMB control number.

TRANSMITTAL FOR POWER OF ATTORNEY TO ONE OR MORE REGISTERED PRACTITIONERS

NOTE: This form is to be submitted with the Power of Attorney by Applicant form (PTO/AIA/82B) to identify the application to which the Power of Attorney is directed, in accordance with 37 CFR 1.5, unless the application number and filing date are identified in the Power of Attorney by Applicant form. If neither form PTO/AIA/82A nor form PTO/AIA82B identifies the application to which the Power of Attorney is directed, the Power of Attorney will not be recognized in the application.

Application Number	TBD
Filing Date	TBD
First Named Inventor	Dean Solon
Title	LEAD ASSEMBLY FOR CONNECTING SOLAR PANEL ARRAYS TO INVERTER
Art Unit	TBD
Examiner Name	TBD
Attorney Docket Number	SHOALS-59

SIGNATURE of Applicant or Patent Practitioner

Signature	/Carla L. Gannon/	Date (Optional)	09/09/2015
Name	Carla L. Gannon	Registration Number	56358
Title (if Applicant is a juristic entity)			
Applicant Name (if Applicant is a juristic entity)			

NOTE: This form must be signed in accordance with 37 CFR 1.33. See 37 CFR 1.4(d) for signature requirements and certifications. If more than one applicant, use multiple forms.

☐ *Total of _____ forms are submitted.

This collection of information is required by 37 CFR 1.131, 1.32, and 1.33. The information is required to obtain or retain a benefit by the public which is to file (and by the USPTO to process) an application. Confidentiality is governed by 35 U.S.C. 122 and 37 CFR 1.11 and 1.14. This collection is estimated to take 3 minutes to complete, including gathering, preparing, and submitting the completed application form to the USPTO. Time will vary depending upon the individual case. Any comments on the amount of time you require to complete this form and/or suggestions for reducing this burden, should be sent to the Chief Information Officer, U.S. Patent and Trademark Office, U.S. Department of Commerce, P.O. Box 1450, Alexandria, VA 22313-1450. DO NOT SEND FEES OR COMPLETED FORMS TO THIS ADDRESS. **SEND TO: Commissioner for Patents, P.O. Box 1450, Alexandria, VA 22313-1450.**

If you need assistance in completing the form, call 1-800-PTO-9199 and select option 2.

Doc Code: PA..
Document Description: Power of Attorney

PTO/AIA/82B (07-13)
Approved for use through 11/30/2014. OMB 0651-0051
U.S. Patent and Trademark Office; U.S. DEPARTMENT OF COMMERCE
Under the Paperwork Reduction Act of 1995, no persons are required to respond to a collection of information unless it displays a valid OMB control number

POWER OF ATTORNEY BY APPLICANT

I hereby revoke all previous powers of attorney given in the application identified in either the attached transmittal letter or the boxes below.

Application Number	Filing Date

(Note: The boxes above may be left blank if information is provided on form PTO/AIA/82A.)

☑ I hereby appoint the Patent Practitioner(s) associated with the following Customer Number as my/our attorney(s) or agent(s), and to transact all business in the United States Patent and Trademark Office connected therewith for the application referenced in the attached transmittal letter (form PTO/AIA/82A) or identified above: 57825

OR

☐ I hereby appoint Practitioner(s) named in the attached list (form PTO/AIA/82C) as my/our attorney(s) or agent(s), and to transact all business in the United States Patent and Trademark Office connected therewith for the patent application referenced in the attached transmittal letter (form PTO/AIA/82A) or identified above. (Note: Complete form PTO/AIA/82C.)

Please recognize or change the correspondence address for the application identified in the attached transmittal letter or the boxes above to:

☐ The address associated with the above-mentioned Customer Number

OR

☑ The address associated with Customer Number: 57825

OR

Firm or Individual Name					
Address					
City		State		Zip	
Country					
Telephone		Email			

I am the Applicant (if the Applicant is a juristic entity, list the Applicant name in the box):

☑ Inventor or Joint Inventor (title not required below)

☐ Legal Representative of a Deceased or Legally Incapacitated Inventor (title not required below)

☐ Assignee or Person to Whom the Inventor is Under an Obligation to Assign (provide signer's title if applicant is a juristic entity)

☐ Person Who Otherwise Shows Sufficient Proprietary Interest (e.g., a petition under 37 CFR 1.46(b)(2) was granted in the application or is concurrently being filed with this document) (provide signer's title if applicant is a juristic entity)

SIGNATURE of Applicant for Patent

The undersigned (whose title is supplied below) is authorized to act on behalf of the applicant (e.g., where the applicant is a juristic entity).

Signature		Date (Optional)	09/09/2015
Name	Dean Solon		
Title	President & CEO		

NOTE: Signature - This form must be signed by the applicant in accordance with 37 CFR 1.33. See 37 CFR 1.4 for signature requirements and certifications. If more than one applicant, use multiple forms.

☐ Total of forms are submitted.

This collection of information is required by 37 CFR 1.131, 1.32, and 1.33. The information is required to obtain or retain a benefit by the public which is to file (and by the USPTO to process) an application. Confidentiality is governed by 35 U.S.C. 122 and 37 CFR 1.11 and 1.14. This collection is estimated to take 3 minutes to complete, including gathering, preparing, and submitting the completed application form to the USPTO. Time will vary depending upon the individual case. Any comments on the amount of time you require to complete this form and/or suggestions for reducing this burden, should be sent to the Chief Information Officer, U.S. Patent and Trademark Office, U.S. Department of Commerce, P.O. Box 1450, Alexandria, VA 22313-1450. DO NOT SEND FEES OR COMPLETED FORMS TO THIS ADDRESS. **SEND TO: Commissioner for Patents, P.O. Box 1450, Alexandria, VA 22313-1450.**

If you need assistance in completing the form, call 1-800-PTO-9199 and select option 2.

Privacy Act Statement

The **Privacy Act of 1974 (P.L. 93-579)** requires that you be given certain information in connection with your submission of the attached form related to a patent application or patent. Accordingly, pursuant to the requirements of the Act, please be advised that: (1) the general authority for the collection of this information is 35 U.S.C. 2(b)(2); (2) furnishing of the information solicited is voluntary; and (3) the principal purpose for which the information is used by the U.S. Patent and Trademark Office is to process and/or examine your submission related to a patent application or patent. If you do not furnish the requested information, the U.S. Patent and Trademark Office may not be able to process and/or examine your submission, which may result in termination of proceedings or abandonment of the application or expiration of the patent.

The information provided by you in this form will be subject to the following routine uses:

1. The information on this form will be treated confidentially to the extent allowed under the Freedom of Information Act (5 U.S.C. 552) and the Privacy Act (5 U.S.C. 552a). Records from this system of records may be disclosed to the Department of Justice to determine whether the Freedom of Information Act requires disclosure of these records.
2. A record from this system of records may be disclosed, as a routine use, in the course of presenting evidence to a court, magistrate, or administrative tribunal, including disclosures to opposing counsel in the course of settlement negotiations.
3. A record in this system of records may be disclosed, as a routine use, to a Member of Congress submitting a request involving an individual, to whom the record pertains, when the individual has requested assistance from the Member with respect to the subject matter of the record.
4. A record in this system of records may be disclosed, as a routine use, to a contractor of the Agency having need for the information in order to perform a contract. Recipients of information shall be required to comply with the requirements of the Privacy Act of 1974, as amended, pursuant to 5 U.S.C. 552a(m).
5. A record related to an International Application filed under the Patent Cooperation Treaty in this system of records may be disclosed, as a routine use, to the International Bureau of the World Intellectual Property Organization, pursuant to the Patent Cooperation Treaty.
6. A record in this system of records may be disclosed, as a routine use, to another federal agency for purposes of National Security review (35 U.S.C. 181) and for review pursuant to the Atomic Energy Act (42 U.S.C. 218(c)).
7. A record from this system of records may be disclosed, as a routine use, to the Administrator, General Services, or his/her designee, during an inspection of records conducted by GSA as part of that agency's responsibility to recommend improvements in records management practices and programs, under authority of 44 U.S.C. 2904 and 2906. Such disclosure shall be made in accordance with the GSA regulations governing inspection of records for this purpose, and any other relevant (i.e., GSA or Commerce) directive. Such disclosure shall not be used to make determinations about individuals.
8. A record from this system of records may be disclosed, as a routine use, to the public after either publication of the application pursuant to 35 U.S.C. 122(b) or issuance of a patent pursuant to 35 U.S.C. 151. Further, a record may be disclosed, subject to the limitations of 37 CFR 1.14, as a routine use, to the public if the record was filed in an application which became abandoned or in which the proceedings were terminated and which application is referenced by either a published application, an application open to public inspections or an issued patent.
9. A record from this system of records may be disclosed, as a routine use, to a Federal, State, or local law enforcement agency, if the USPTO becomes aware of a violation or potential violation of law or regulation.

LEAD ASSEMBLY FOR CONNECTING SOLAR PANEL ARRAYS TO INVERTER

CROSS-REFERENCE TO RELATED APPLICATIONS

This application claims priority from the United States provisional patent application entitled PRE-PANELIZED THIN FILM, RACK, CONNECTORLESS DUAL CORDPLATE, MOBILE SKIDGET, POWERHOUSE AND BLA TRUNK BUSS, which was filed on September 9, 2014, and assigned the serial number 62/047,773.

BACKGROUND OF THE INVENTION

The present invention relates to electrical components, and more specifically to assemblies for connecting solar panel arrays to an inverter, without the need of a combiner box.

As depicted in FIG. 1, a conventional solar power configuration includes a plurality of solar panels 30 each connected to a central combiner box 36, and a plurality of combiner boxes (not shown) connected to an inverter. The inverter converts the direct current (DC) generated by the solar panels into alternating power (AC), which goes in the “grid”.

The configuration of FIG. 1 has been simplified in recent years by the wire harness of US Patent 8,604,342 which issued 12/10/13; and US Applications 14/057,089 filed 10/18/13; 14/057,089 filed 10/18/13; and 14/296,726 filed 6/5/14, all of which are hereby incorporated by reference. More specifically, as shown in FIG. 2, wire harnesses 34 connect multiple solar panels 30 in an array 32, so each array has a single input via wire harness 34 into the combiner box. This has drastically reduced the number of connections going into a combiner box, which is safer, more reliable, easier to install, maintain and troubleshoot, and saves money over the conventional configuration of FIG. 1.

Unfortunately, however, a combiner box is still a necessary component in known solar power installations because the energy coming from solar arrays

Voltage, LLC
EX1021-317

must be combined prior to going into the inverter. Combiner boxes are problematic because they are clumsy, prone to damage and malfunctioning, must be periodically maintained, and require extensive planning and skill for installation. Due to the many connections going into a combiner box, a combiner box cannot easily be moved without disconnecting and reconnecting all the connections and wiring, which requires considerable manpower, danger, and expense.

As can be seen, there is a need for a device that renders a combiner box unnecessary. It is desirable that this device is small, inexpensive to manufacture and transport, and easy to use. It is also desirable that the device is extremely durable and can be adapted for a variety of circumstances.

SUMMARY OF THE INVENTION

The present invention is a lead assembly including at least one drop line joined to a feeder cable at a compression lug. The assembly is preferably undermolded and overmolded where drop lines meet the feeder cable. In use, the drop line is connected to solar arrays, and the feeder cable is connected to an inverter, or to a buss trunk jumper, which connects to the inverter. In this manner a plurality of solar arrays are electrically coupled together, with a common feeder cable connecting them all to the inverter. Alternatively, a plurality of feeder cables can be connected end to end, optionally terminating in a buss trunk jumper, for connection to an inverter. A combiner box is not necessary, and in fact would be redundant. In line fuses may be integrated into drop lines.

The terminal end of each drop line includes a drop line connector for fast and easy connection to the wire harness that interconnects the solar panels of a solar array. A lead assembly preferably includes one or two drop lines, depending on the particular configuration in a solar field. A lead assembly preferably includes a capping end piece at one end of the feeder cable, and a feeder cable connector at the other end. The feeder cable connector would plug into an inverter, buss trunk jumper, or possibly another feeder cable.

Voltage, LLC
EX1021-318

BRIEF DESCRIPTION OF THE DRAWINGS

FIG. 1 depicts a conventional wiring configuration with each solar panel individually wired to a central combiner box;

FIG. 2 depicts an improved but known wiring configuration with solar panels harnessed together to form solar arrays, with each solar array individually wired to a central combiner box;

FIG. 3 depicts the present invention of a plurality of wire harnesses coupled to a lead assembly that connects to an inverter, with the unnecessary combiner box shown for demonstration only;

FIG. 4 schematically represents a system of the present invention;

FIG. 5 depicts a positive lead assembly having a single drop line per joint;

FIG. 6 depicts a negative lead assembly having a single drop line per joint;

FIG. 7 schematically depicts a joint with a compression lug;

FIG. 8 depicts a single drop joint;

FIG. 9 depicts a configuration where a lead assembly has a single drop line as may be appropriate in use with crystalline panels;

FIG. 10 depicts a configuration where a lead assembly has a single drop line as may be appropriate in use with thin film panels;

FIGS. 11-12 depict the overmold for a dual drop lead assembly for 250 mcm cable;

FIGS. 13-14 depict the overmold for a dual drop lead assembly for 750MCM cable;

FIGS. 15-16 depict the undermold for a dual drop lead assembly for 250MCM cable;

FIGS. 17-18 depict the undermold for a dual drop lead assembly for 750MCM cable;

Voltage, LLC
EX1021-319

FIGS. 19-20 depict the overmold for a single drop lead assembly for 250MCM cable;

FIGS. 21-22 depict the overmold for a single drop lead assembly for 750MCM cable;

FIGS. 23-24 depict the undermold for a single drop lead assembly for 250MCM cable;

FIGS. 25-26 depict the undermold for a single drop lead assembly for 750MCM cable;

FIG. 27 depicts two lead assemblies with single drop, with the lower assembly including in line fuses;

FIG. 28 depicts a spooled lead assembly with single drop;

FIG. 29 depicts a dual drop lead assembly for 750MCM cable;

FIG. 30 depicts a single drop lead assembly for 750MCM cable;

FIG. 31 depicts a dual drop lead assembly for 750MCM cable with overmold shown;

FIG. 32 depicts the overmold for a dual drop lead assembly for 750MCM cable;

FIG. 33 depicts a dual drop lead assembly for 750MCM cable with undermold shown;

FIG. 34 depicts the undermold for a dual drop lead assembly for 750MCM cable;

FIG. 35 depicts a dual drop lead assembly for 750MCM cable with compression lug shown;

FIG. 36 depicts the compression lug for a dual drop lead assembly for 750MCM cable;

FIG. 37 depicts a dual drop lead assembly for 750MCM cable with wires exposed at nexus;

FIG. 38 depicts the end piece for a dual drop lead assembly for 750MCM cable;

FIG. 39 depicts a single drop lead assembly for 750MCM cable with overmold shown;

Voltage, LLC
EX1021-320

FIG. 40 depicts the overmold for a dual single lead assembly for 750MCM cable;

FIG. 41 depicts a single drop lead assembly for 750MCM cable with undermold shown;

FIG. 42 depicts the undermold for a single drop lead assembly for 750MCM cable;

FIG. 43 depicts a single drop lead assembly for 750MCM cable with compression lug shown;

FIG. 44 depicts the compression lug for a single drop lead assembly for 750MCM cable;

FIG. 45 depicts a single drop lead assembly for 750MCM cable with wires exposed at nexus;

FIG. 46 depicts the end piece for a single drop lead assembly for 750MCM cable;

FIG. 47 depicts a dual drop lead assembly for 250MCM cable;

FIG. 48 depicts a single drop lead assembly for 250MCM cable with the overmold depicted in phantom;

FIG. 49 depicts a dual drop lead assembly for 250MCM cable with overmold shown;

FIG. 50 depicts the overmold for a dual drop lead assembly for 250MCM cable;

FIG. 51 depicts a dual drop lead assembly for 250MCM cable with undermold shown;

FIG. 52 depicts the undermold for a dual drop lead assembly for 250MCM cable;

FIG. 53 depicts a dual drop lead assembly for 250MCM cable with wires exposed at nexus;

FIG. 54 depicts the end of string for a dual drop lead assembly for 250MCM cable with the overmold depicted in phantom;

FIG. 55 depicts a single drop lead assembly for 250MCM cable with the overmold depicted in phantom;

Voltage, LLC
EX1021-321

FIG. 56 depicts the overmold for a single drop lead assembly for 250MCM cable;

FIG. 57 depicts a single drop lead assembly for 250MCM cable with undermold shown;

FIG. 58 depicts the undermold for a single drop lead assembly for 250MCM cable;

FIG. 59 depicts a single drop lead assembly for 250MCM cable with wires exposed at nexus;

FIG. 60 depicts the end of string for a single drop lead assembly for 250MCM cable with the overmold depicted in phantom; and

FIG. 61 depicts a compression lug.

DETAILED DESCRIPTION OF THE INVENTION

The following detailed description is of the best currently contemplated modes of carrying out exemplary embodiments of the invention. The description is not to be taken in a limiting sense, but is made merely for the purpose of illustrating the general principles of the invention, since the scope of the invention is best defined by the appended claims.

The following structure numbers shall apply to the following structures among the various FIGS.:

10 – Lead assembly;
12 – Drop line;
13 – Drop line connector;
14 – Feeder cable;
15 – Feeder cable connector;
16 – Insulation;
17 – Joint;
18 – Exposed wire;
19 – Nexus;

Voltage, LLC
EX1021-322

20 – Compression lug;
22 – Undermold;
24 – Overmold;
25 – Aperture;
27 – Trunk buss jumper;
29 – In line fuse;
30 – Solar panel;
32 - Solar array;
34 –Wire harness;
35 – Wire harness connector;
36 – Combiner box; and
38 – Inverter.

Referring to FIG. 3, a system of the present invention generally includes a plurality of solar panels 30 that are electrically coupled to form solar arrays 32a, 32b, and so forth. Panels 30 are preferably coupled using wire harnesses 34 which are commercially available from Shoals Technologies Group of Portland, TN. Each wire harness includes a plurality of branches each connecting to one solar panel, and a central trunk that terminates in wire harness connector 35. Each wire harness is connected at wire harness connector 35 to drop line connector 13 (not shown) of lead assembly 10.

As shown in FIG. 3, solar arrays 32a, 32b and 32c are connected to a lead assembly 10. A single lead assembly 10 can reasonably accommodate approximately 200Kw.

While FIG. 5 depicts a positive lead assembly having in line fuses 29, and FIG. 6 depicts a negative lead assembly without in line fuses, it should be understood that positive lead assemblies may lack in line fuses and negative lead assemblies may include in line fuses.

Referring now to FIG. 5, lead assembly 10 generally includes drop line 12 joined to feeder cable 14 at joint 17. As shown in FIG. 35, the drop line and feeder cable are held together by compression lug 20, which is surrounded by

Voltage, LLC
EX1021-323

undermold 22 (FIG. 33), which is surrounded by overmold 24 (FIG. 29). Overmold 24 preferably defines at least one aperture 25 for receiving zip-ties, and the like, for securing the assembly upon installation.

Each drop line 12 terminates in drop line connector 13, which connects drop line 12 to wire harness connector 35. Drop line 12 is preferably constructed of 18 to 4 gauge wire, and drop line connectors 13 are preferably off-the-shelf connectors such as MC4/ PV-KBT4/6I-UR & PV-KST4/6I-UR from Multi-Contact of Windsor, CA .Joint 17 of lead assembly 10 may include a single drop line 12, as shown in FIG. 30, or dual drop lines 12, as shown in FIG 29, corresponding with connecting to a single wire harness or two wire harnesses, respectively. Whether a single or dual drop line is most suitable depends on the configuration of the solar arrays in a field.

By way of example and referring to FIG. 10, in a solar installation having thin film panels, which occupy a large area of space, it may be advantageous to employ single drop assemblies because it is impractical to physically reach wire harnesses that are very spread out. Alternatively and referring to FIG. 9, in a solar installation having crystalline panels, which occupy a smaller area of space, it may be advantageous to employ dual drop assemblies because the associated wire harnesses are relatively close to one another and can be connected to a single lead assembly.

It is also important to understand that the configuration of a particular lead assembly can be modified to accommodate different solar installations. For example, joints 17 and corresponding drop lines 12 can be spaced close together (approximately 15 cm), or far apart (approximately 15000 cm), along feeder cable 14, depending on the density of solar panels. Also, spacing of joints 17 and corresponding drop lines 12 can vary on a single lead assembly.

Each feeder cable 14 terminates in feeder cable connector 15, which connects to trunk buss jumper 27 (FIG. 27), to inverter 38 (FIG. 3), or to connection unit, recombiner, or disconnect unit (not shown). Trunk buss jumper 27 is essentially an “extension cord” which is economical to use in some configurations, for example where portions of feeder cable 14 are installed at

Voltage, LLC
EX1021-324

different times. In another situation, trunk buss jumper 27 could be buried underground and feeder cable 14 above ground. Being able in install these conponents independent of one another can offer much more diversity. Trunk buss jumper 27 could also be utilized if there are a significant number of varying lengths from solar array 32 to inverter 38. Trunk buss jumper 27 could also be utilized if there is a substantial distance (greater than >50 meters) to travel from closest solar array 32 to inverter 38 and it would be wasteful to use a lead assembly with unused drop lines. The other end of feeder cable 14 terminates in joint 17 having end piece 26, which is typically installed at the solar array located furthest from the inverter. In alternative embodiments, feeder cable 14 includes feeder cable connector 15 at both terminal ends so feeder cables 14 can be connected one-to-another in an end-to-end orientation. In yet another embodiment, one or both ends of feeder cables 14 are blunt cut for subsequent manual connection, for example stripping and crimping to connectors or other segments of feeder cable.

Feeder cable 14 is preferably constructed of 6 gauge to 1000 MCM wire, with the specific wire chosen based on factors such as the number of associated drop lines and the distance between the connection and downstream inverter and whether or not feeder cable 14 is of aluminum or copper construction. Feeder cable connectors 15 are preferably off-the-shelf connectors such as KBT10BV & KST10BV from Multi-Contact of Windsor, CA.

Referring to FIG. 37, drop line 12 and feeder cable 14 electrically couple at nexus 19 of joint 17. This is preferably accomplished by stripping wire insulation 16 from corresponding segments of drop line 12 and feeder cable 14, adjoining respective segments of exposed wire 18, and securing contact between the segments of exposed wire by employing compression lug 20. It should be understood that securing contact between the segments could be achieved by other means including soldering, splicing, crimping, and so forth. Compression lug 20 is preferably surrounded by undermold 22, which is preferably composed of RTP 2099E x 127663 from RTP Co. of Winona, MN that has been applied by injection molding. As shown in FIG. 48, undermold 22 is preferably surrounded

Voltage, LLC
EX1021-325

by overmold 24, which is preferably composed of RTP 199 x 124807 from RTP Co of Winona, MN that has been applied by injection molding. The resulting assembly is profoundly durable, resistant to environmental factors such as temperature fluctuations, debris, and moisture, and is strong enough to be buried.

In an alternative embodiment, there is no undermold, just an overmold, which is applied in a single molding process.

It is a very important feature that a system of the present invention doesn't require a combiner box. Rather, lead assemblies 10 effectively "combine" the power from solar arrays 32 and deliver it to inverter 38. As shown in FIG. 3, the present invention also eliminates the need of DC feeders, which would carry power from the combiner box to the inverter in a conventional system. Also, the need for fuses can be eliminated by using drop lines including in line fuses 29, as shown in the lower assembly of FIG. 27. Appropriate fuses include of HP10x from Mersen of Newburyport, MA.

An embodiment of the present invention preferably has the following specifications: Voltage rating of 600 VDC / 1000 VDC / 1500 VDC; Maximum branch current of 30 amps per string; Maximum overcurrent protection of 30 amps per string; maximum trunk cable size of 750MCM; and Maximum ambient operating temperature of 50º C, although other embodiments beyond these specifications are within the scope of the inventions.

It should also be understood that the illustrations are for the purpose of describing a preferred embodiment of the inventions and are not intended to limit the inventions thereto. By way of example, the present invention can be scaled up or down to accommodate any feeder cable size, including the common 250 and 750MCM cable sizes. Also, while the current invention has been described in association with DC applications, it should be understood that it could also be implemented into feeders deployed in AC systems, which would negate the need for AC recombiner boxes. It should also be understood that approximations allow variances of +/- 10%, unless otherwise noted or nonsensical such as a length less than zero. It should also be understood that all ranges set forth

Voltage, LLC
EX1021-326

inherently include the endpoints themselves, as well as all increments, there between.

Voltage, LLC
EX1021-327

What is claimed is:

1. A lead assembly for use in a solar energy installation including:

A. At least one drop line terminating in a drop line connector;

B. At least one feeder cable terminating in a feeder cable connector, said at least one drop line and said at least one feeder cable electrically coupled at a nexus;

C. A means for securing said nexus, said securing means selected from the group consisting of compression lug, soldering, splicing, crimping, and combinations thereof; and

D. An overmold surrounding said compression lug, wherein said lead assembly combines power from a plurality of solar arrays and transmits that power to an inverter in a solar energy installation lacking a combiner box between said solar arraysand said inverter.

2. The lead assembly of claim 1 wherein said at least one drop line includes a section of exposed wire at said nexus.

3. The lead assembly of claim 2 wherein said at least one feeder cable includes a section of exposed wire at said nexus.

4. The lead assembly of claim 1 further comprising an undermold positioned between said nexus and said overmold.

5. The lead assembly of claim 4 wherein said overmold defines at least one aperture.

Voltage, LLC
EX1021-328

6. A solar power system:

A. A first plurality of solar panels electrically coupled by a first wire harness to form a first solar array; and

B. A lead assembly including a first drop line electrically connected to said first wire harness, and a feeder cable electrically connected to a component selected from the group consisting of a trunk buss jumper, an inverter, a connection unit, a recombiner, and a disconnect unit, said first drop line and said feeder cable electrically connected at a nexus, wherein the solar power system doesn't include a combiner box upstream of said component.

7. The solar power system of claim 6 further including:

A. A second plurality of solar panels electrically coupled by a second wire harness to form a second solar array; and

B. A second drop line electrically connected to said second wire harness, said second drop line electrically connected to said feeder cable at a second nexus.

8. The solar power system of claim 6 wherein said lead assembly has a configuration selected from the group consisting of a single drop line configuration and a dual drop line configuration.

9. The solar power system of claim 6 wherein said lead assembly includes an end piece.

10. The solar power system of claim 6 wherein said first drop line terminates in a drop line connector.

11. The solar power system of claim 6 wherein said feeder cable terminates in a feeder cable connector.

Voltage, LLC
EX1021-329

12. The solar power system of claim 6 wherein said first drop line includes 18 to 4 gauge wire.

13. The solar power system of claim 6 wherein said feeder cable includes 6 gauge to 1000MCM wire.

14. The solar power system of claim 6 wherein said first nexus is surrounded by a compression lug.

15. The solar power system of claim 14 wherein said compression lug is surrounded by an undermold.

16. The solar power system of claim 15 wherein said undermold is surrounded by an overmold.

Voltage, LLC
EX1021-330

17. A method of constructing a solar power installation including the steps of:

A. Connecting a plurality of solar panels to a wire harness to form a solar array;

B. Connecting said wire harness to the drop line of a lead assembly;

C. Electrically coupling said lead assembly to an inverter without electrically coupling to a combiner box.

18. The method of claim 17 wherein said step of electrically coupling said lead assembly to an inverter includes the steps of electrically coupling a feeder cable to said inverter.

Voltage, LLC
EX1021-331

ABSTRACT

A lead assembly includes at plurality of drop line joined to a feeder cable at joints each having a compression lug that is preferably surrounded by undermolding and overmolding. In use, each drop line is connected to a solar array, and the feeder cable is connected to an inverter. In this manner a plurality of solar arrays are electrically coupled together, with a common feeder cable connecting them all to the inverter. A system of the present invention doesn't require a combiner box which is conventionally employed directly upstream of the inverter.

Voltage, LLC
EX1021-332

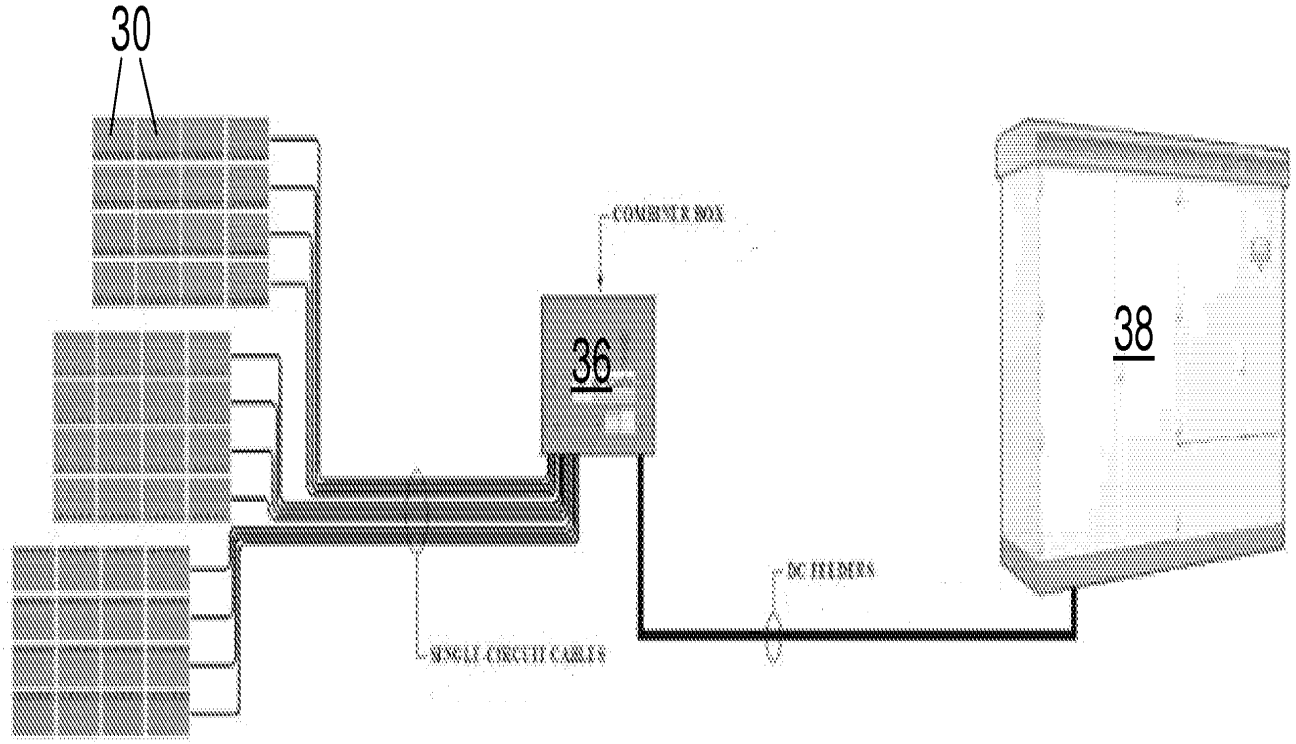

PRIOR ART

FIG. 1

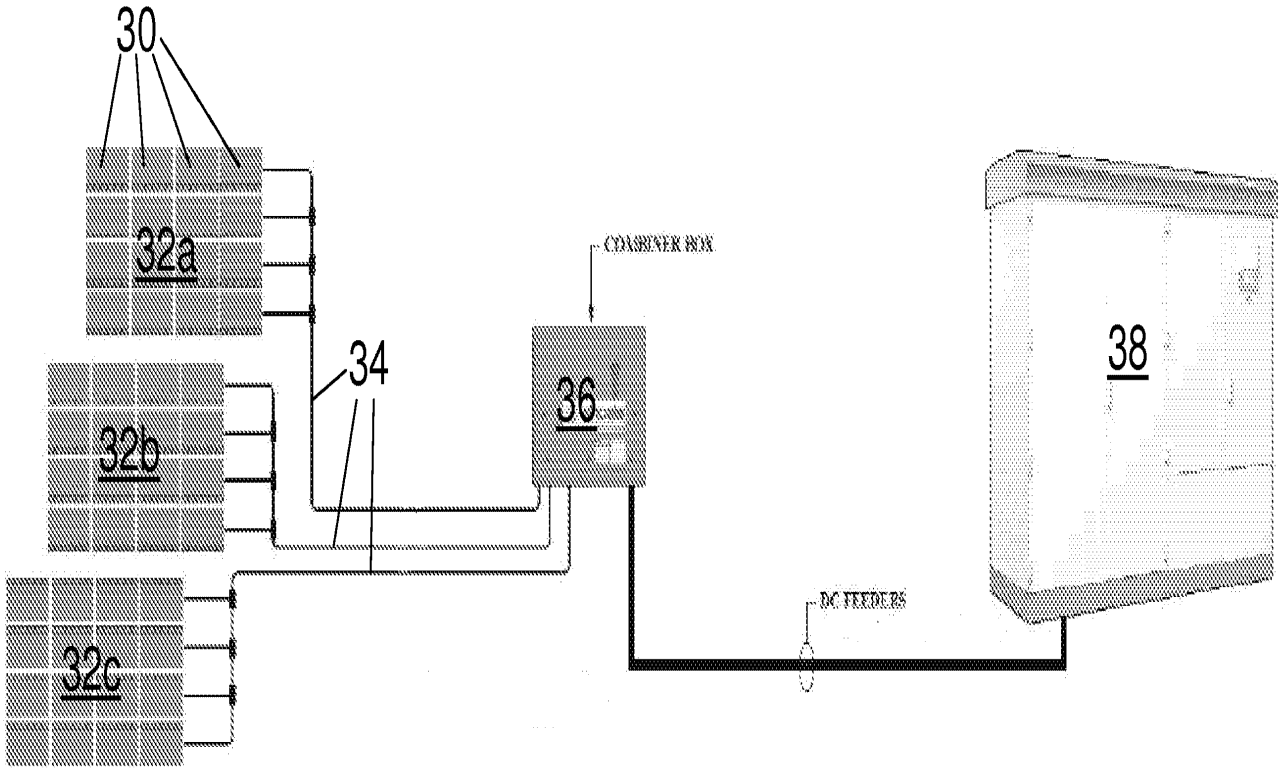

PRIOR ART

FIG. 2

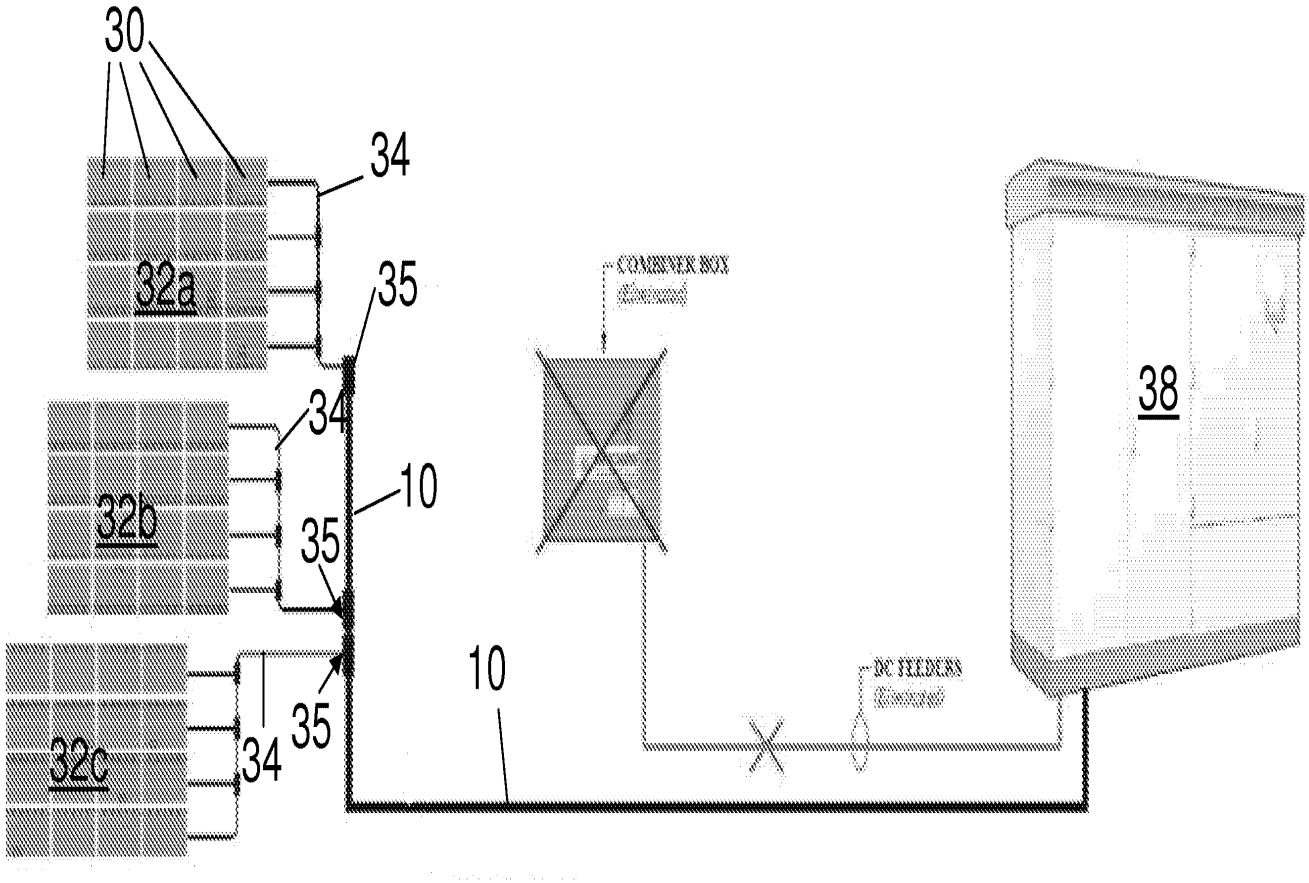

FIG. 3

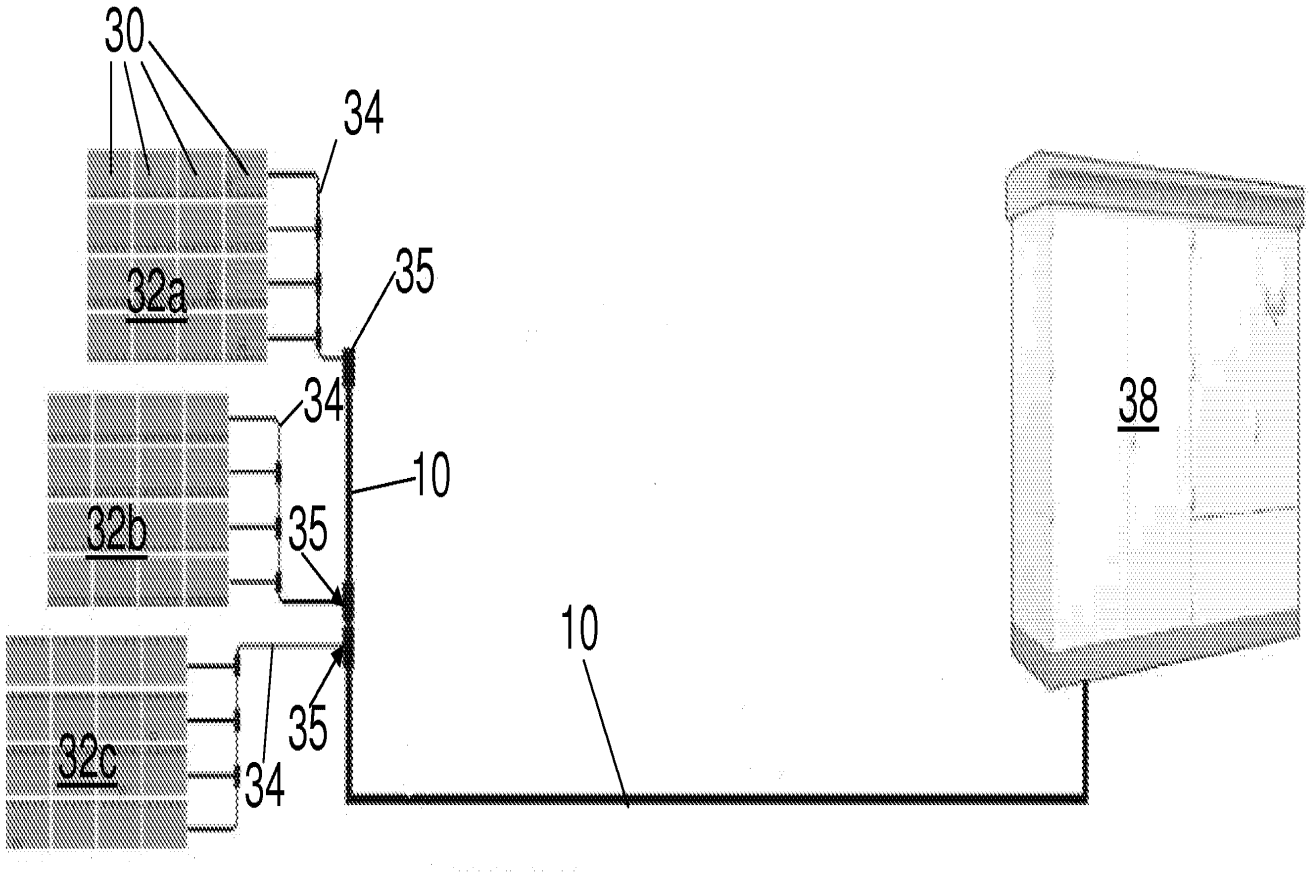

FIG. 4

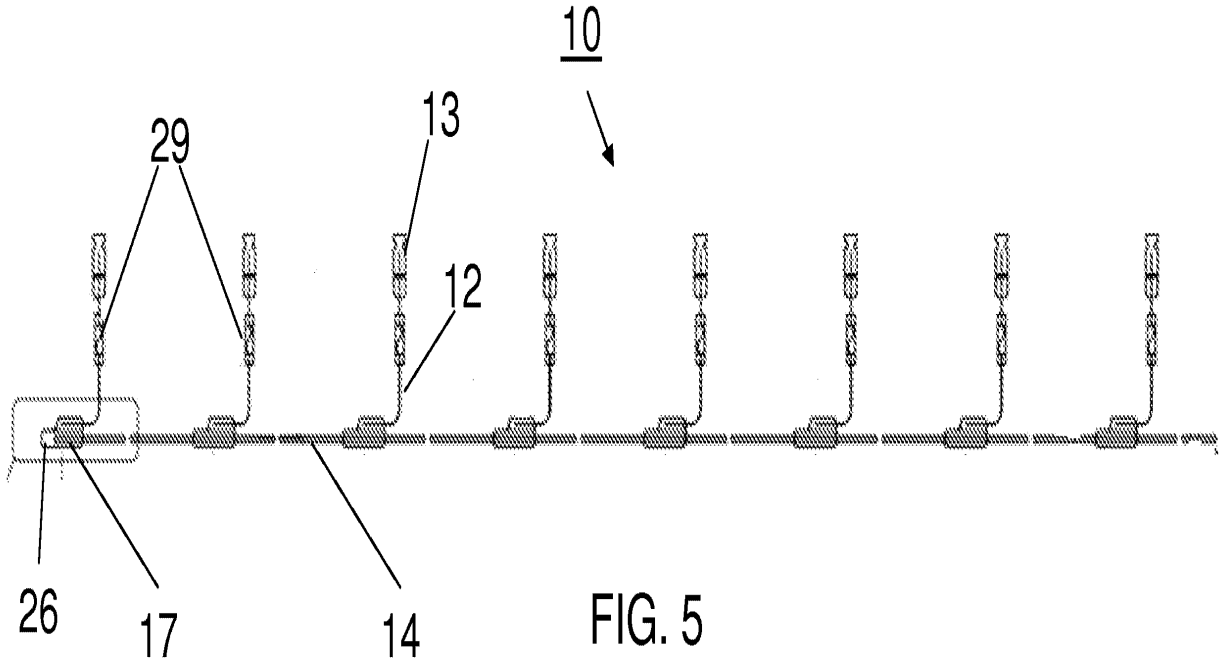

FIG. 5

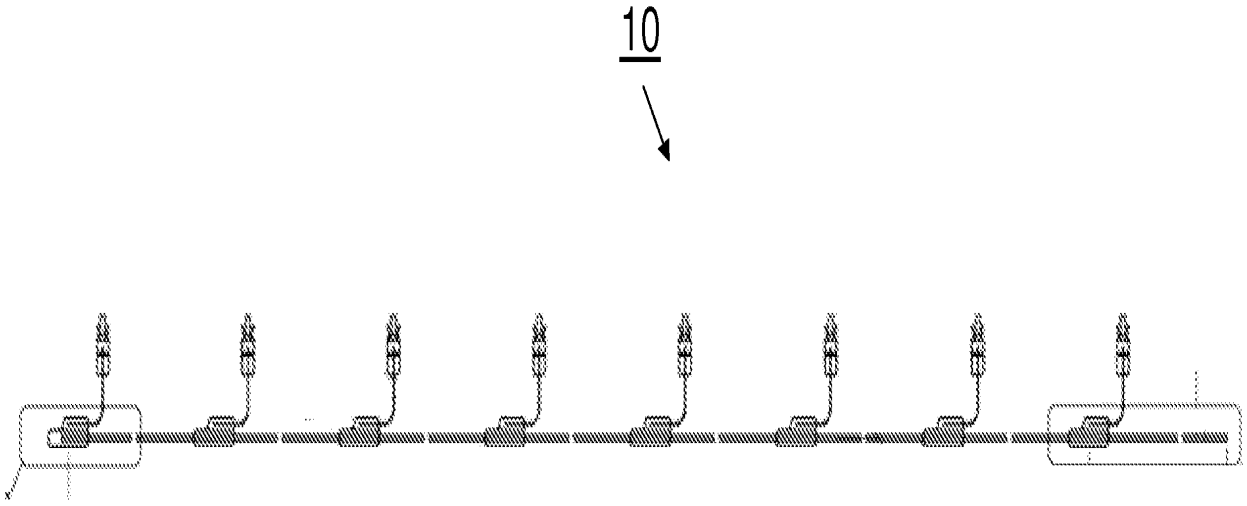

FIG. 6

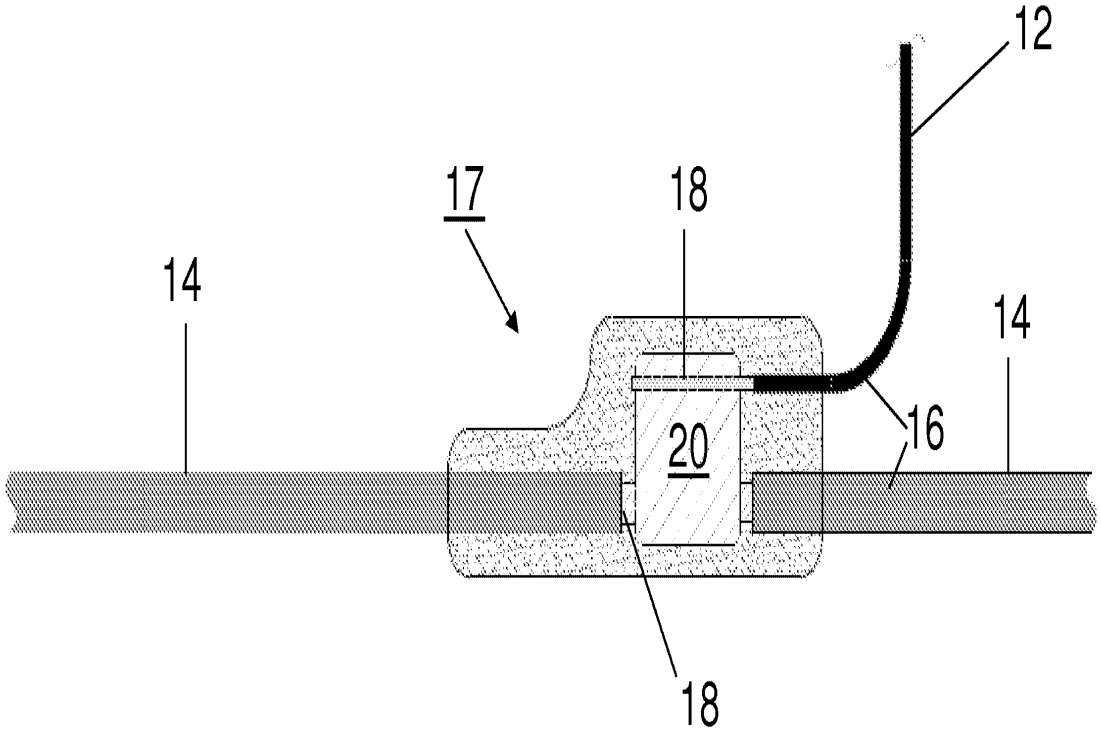

FIG. 7

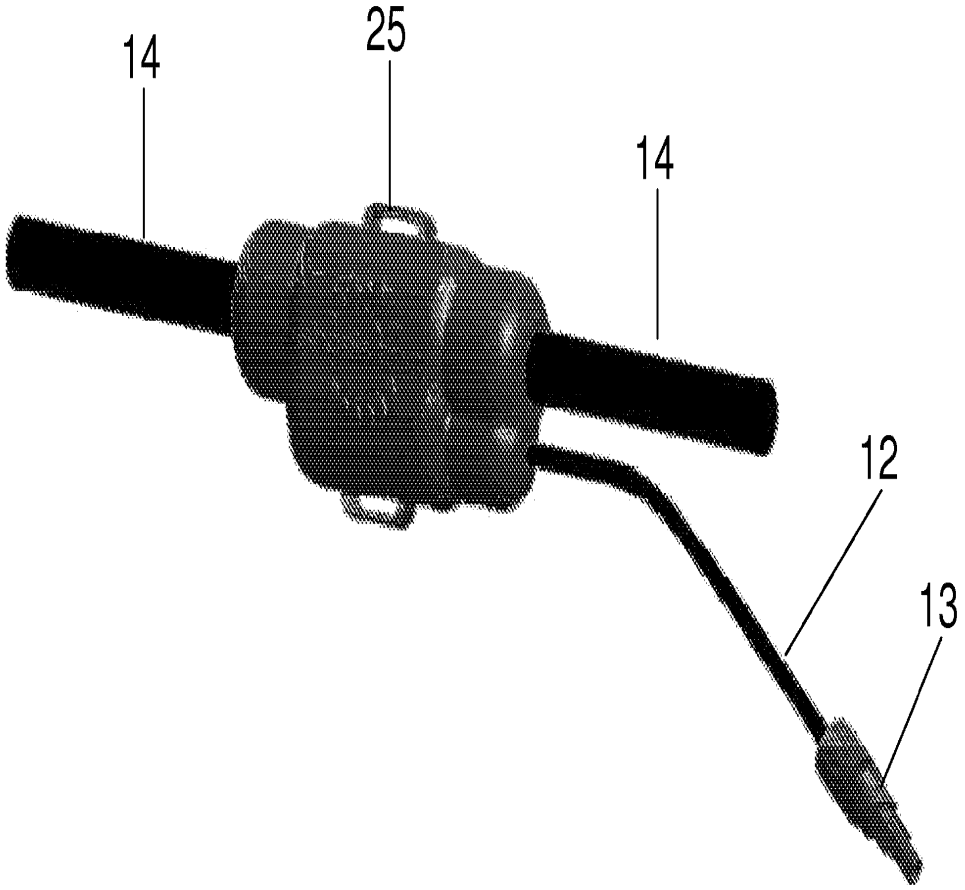

FIG. 8

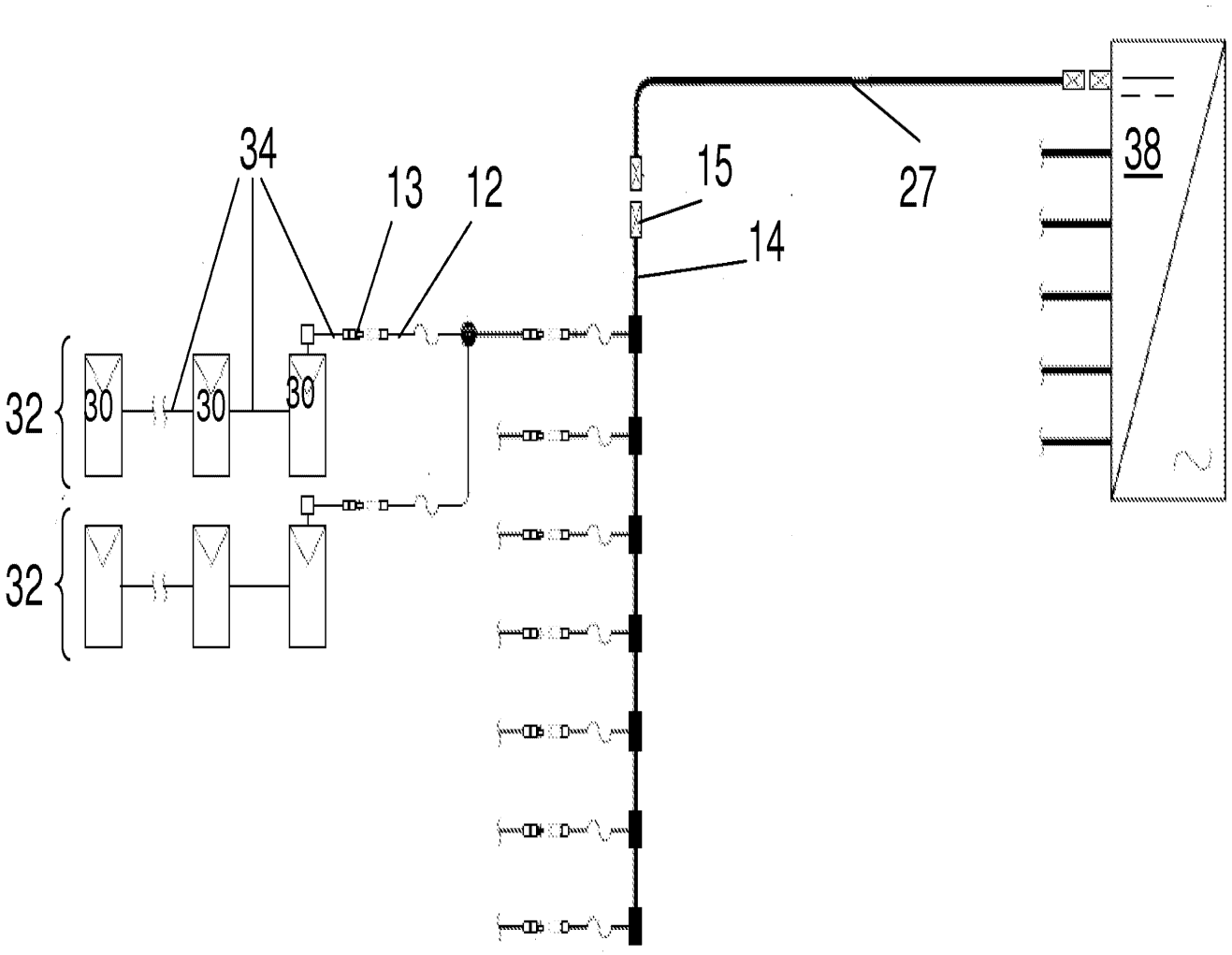

FIG. 9

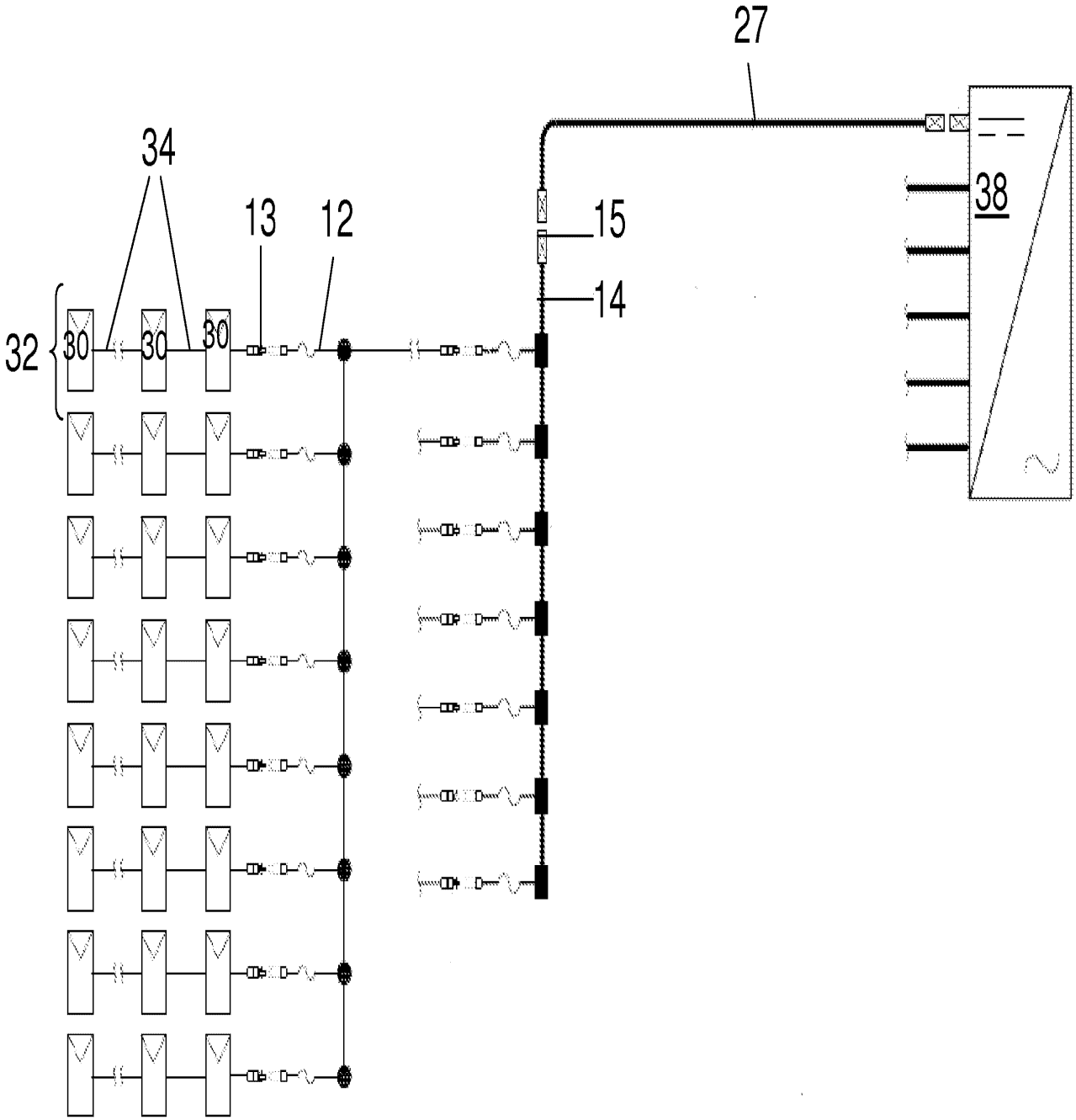

FIG. 10

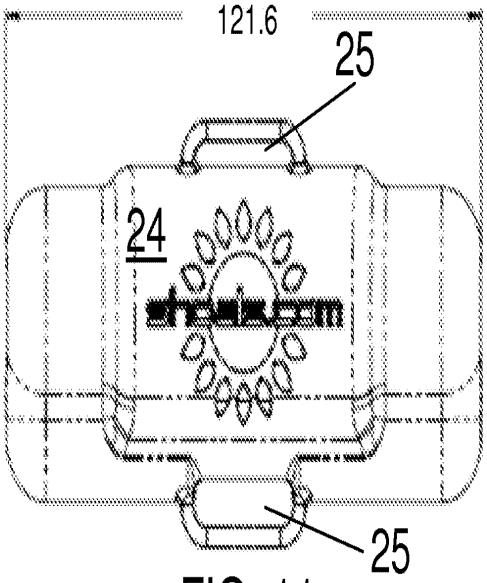

FIG. 11

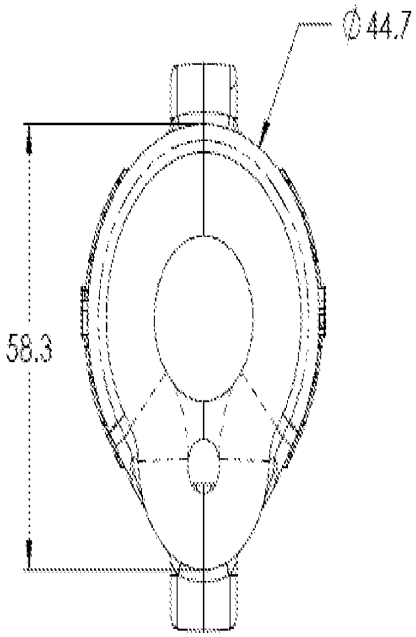

FIG. 12

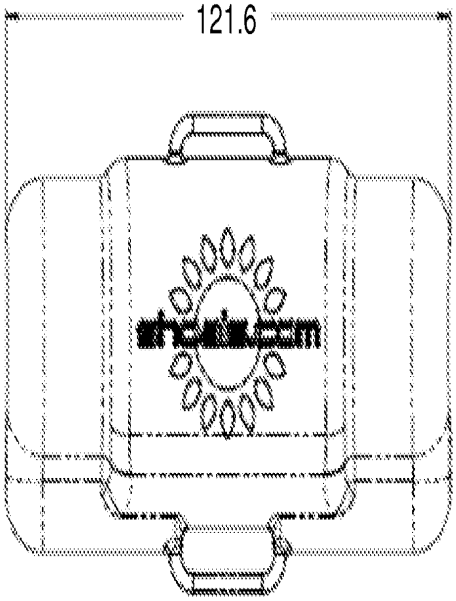

FIG. 13

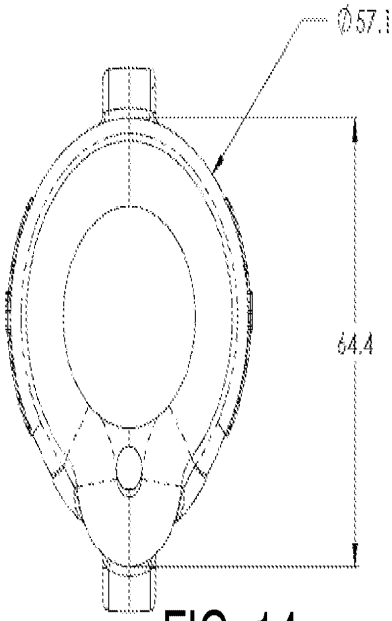

FIG. 14

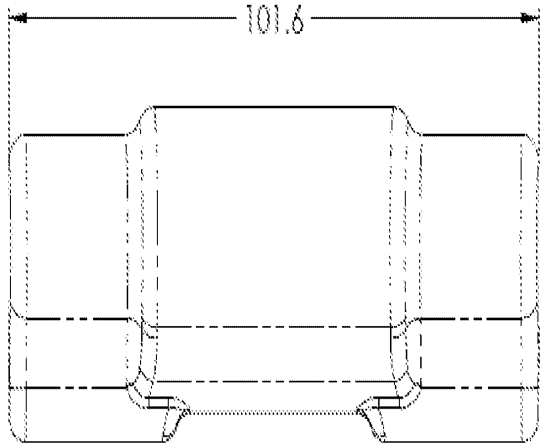

FIG. 15

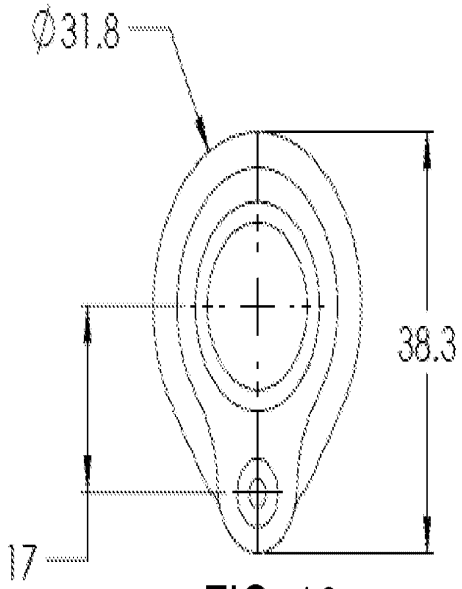

FIG. 16

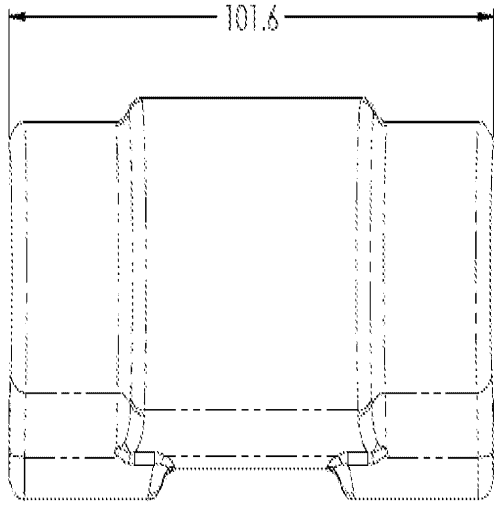

FIG. 17

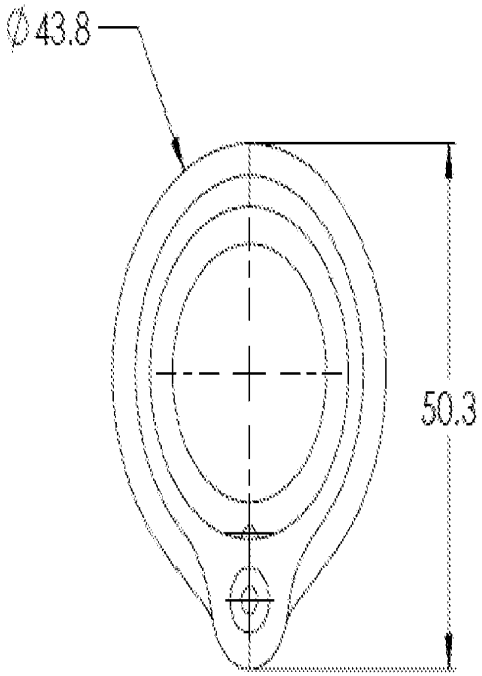

FIG. 18

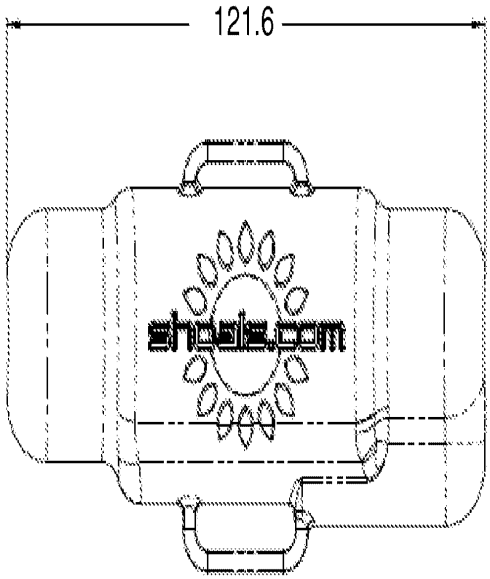

FIG. 19

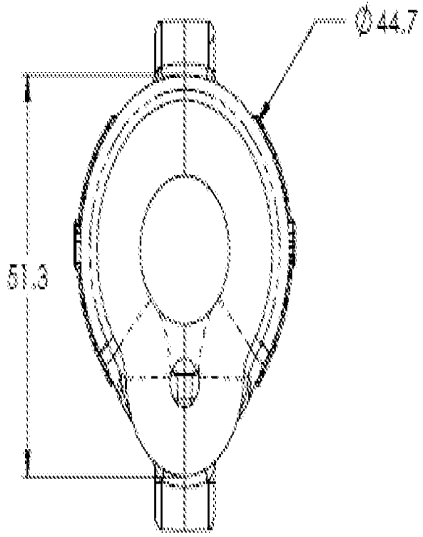

FIG. 20

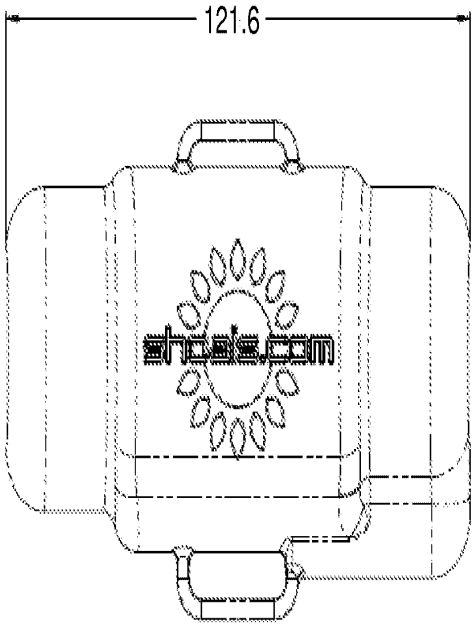

FIG. 21

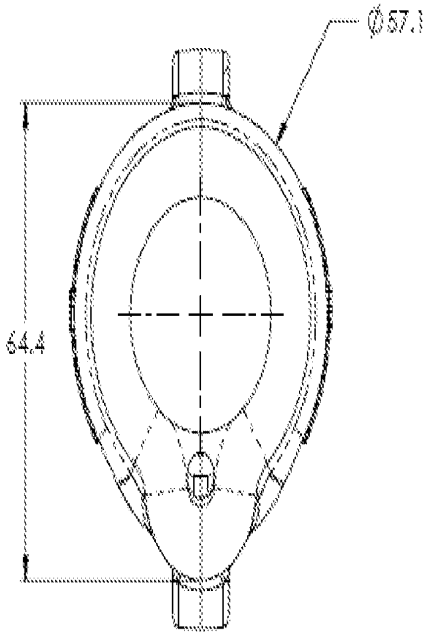

FIG. 22

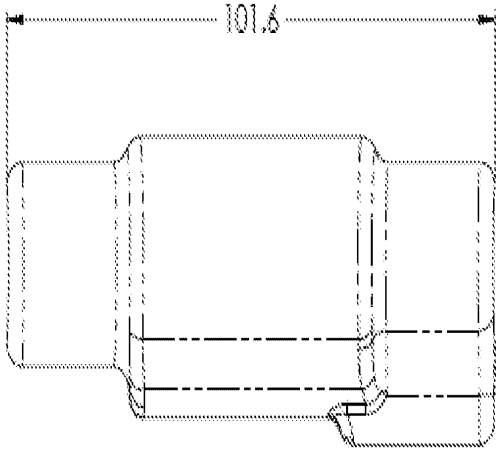

FIG. 23

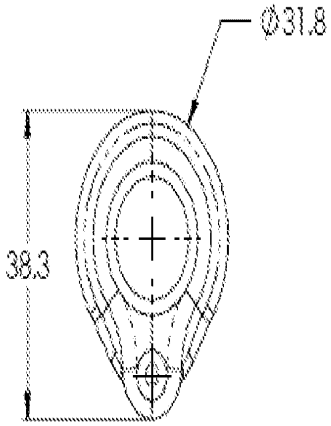

FIG. 24

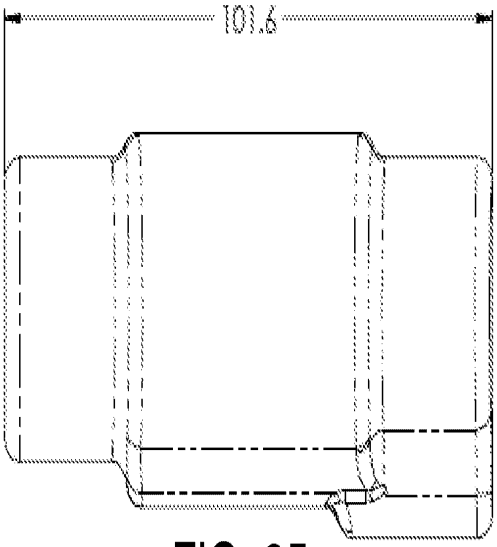

FIG. 25

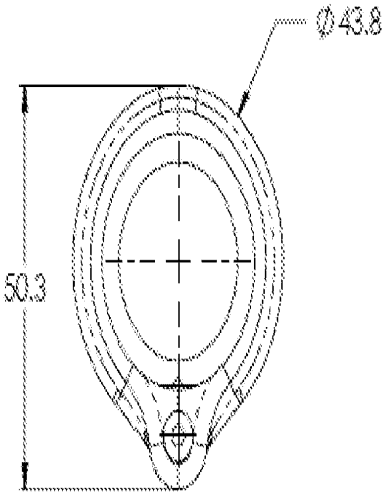

FIG. 26

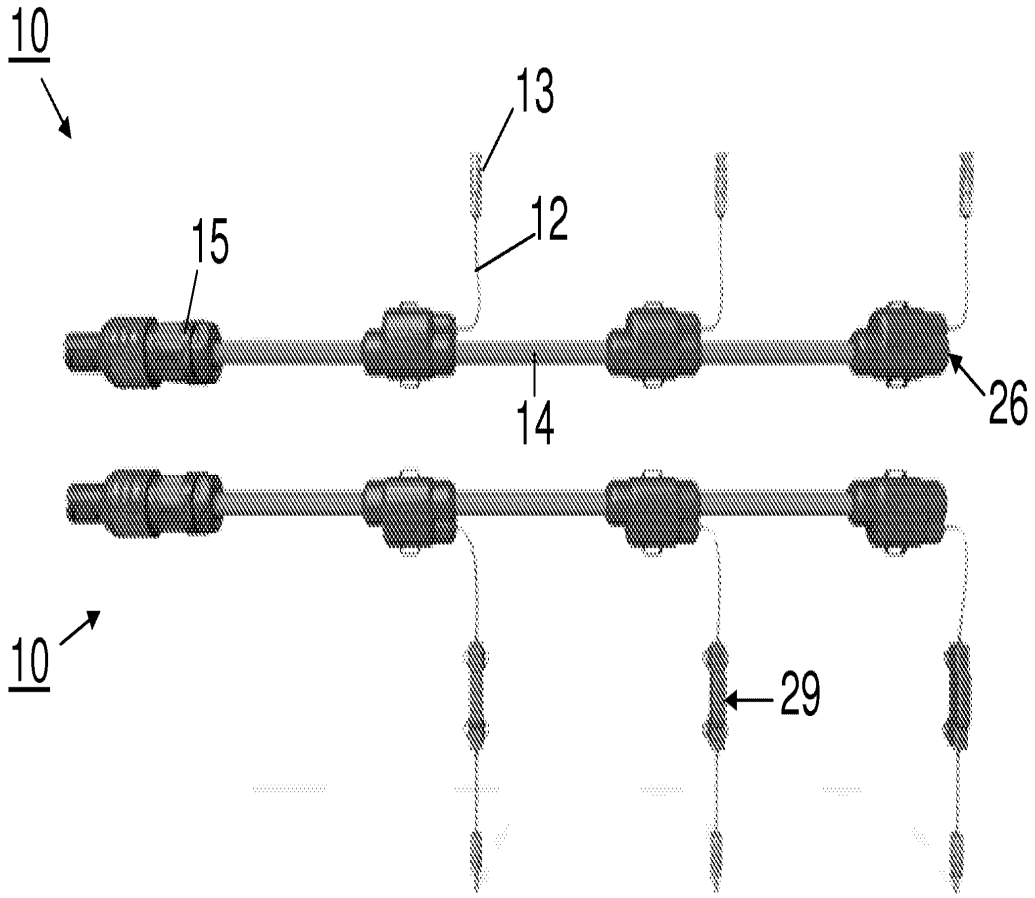

FIG. 27

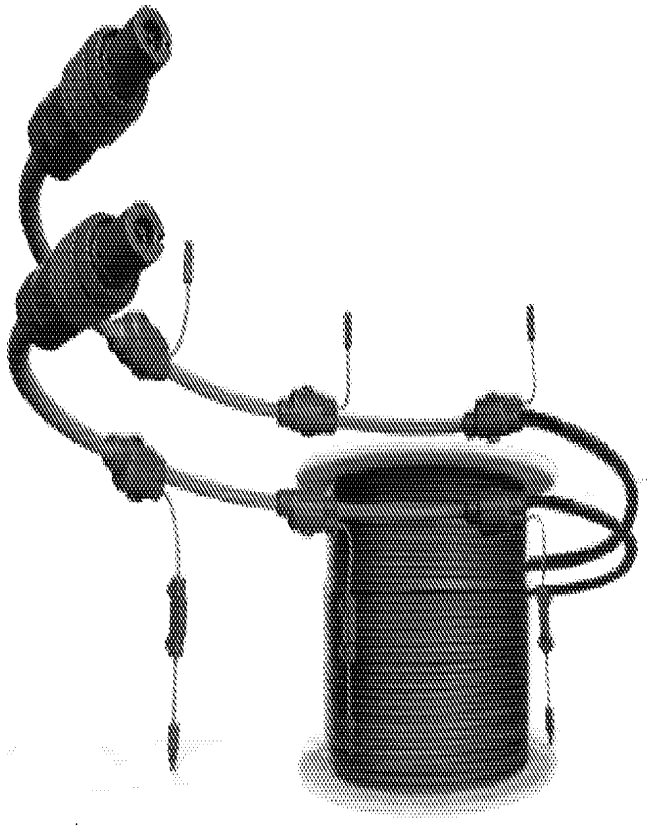

FIG. 28

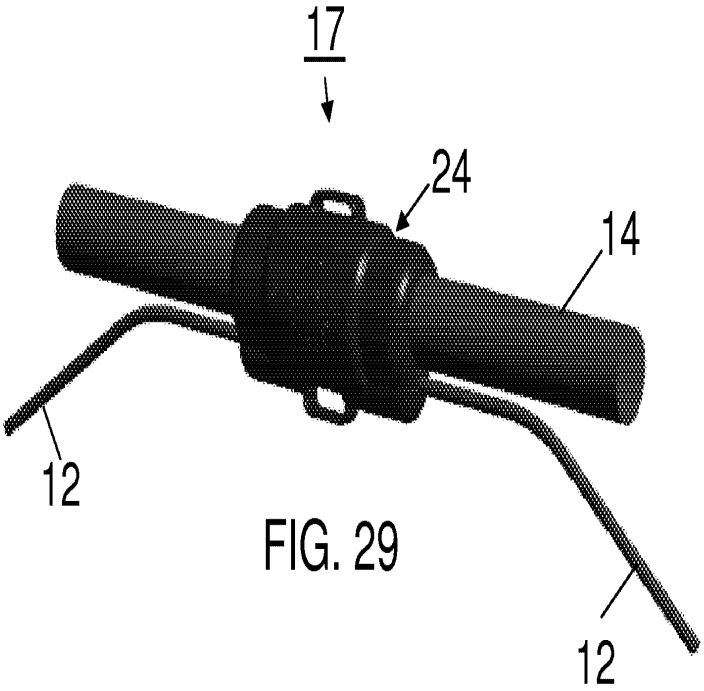

FIG. 29

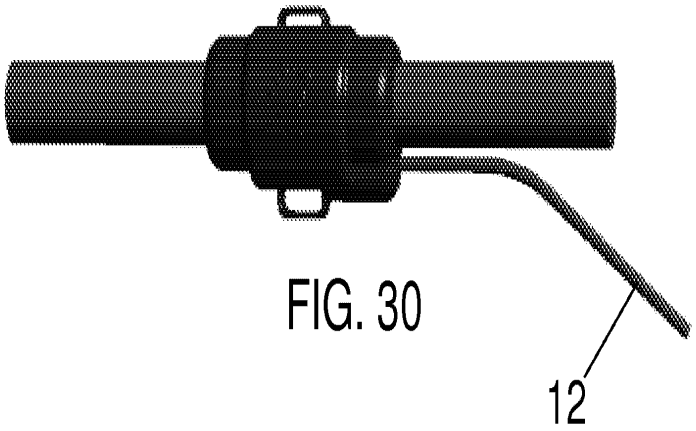

FIG. 30

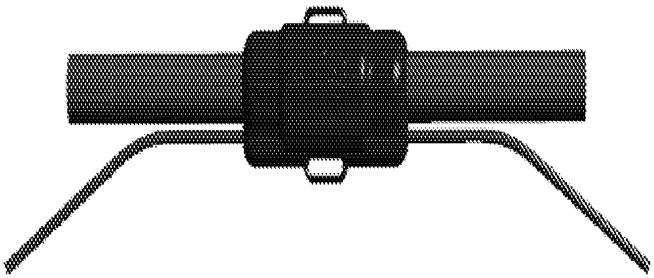

FIG. 31

FIG. 32

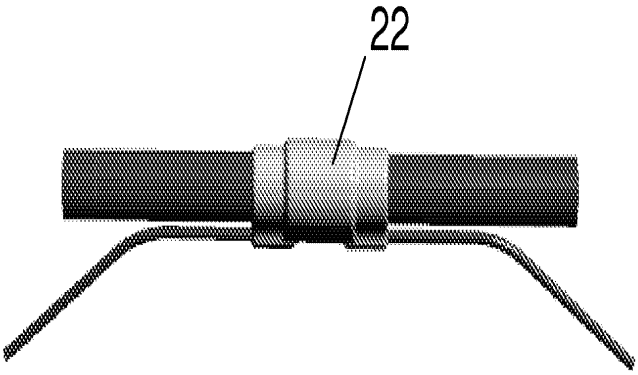

FIG. 33

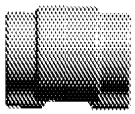

FIG. 34

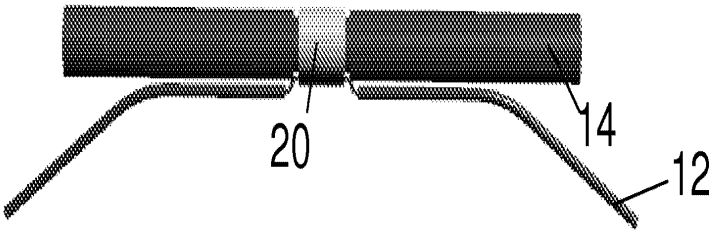

FIG. 35

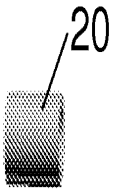

FIG. 36

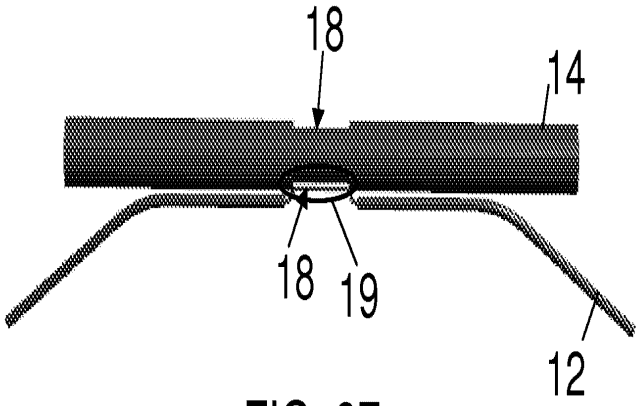

FIG. 37

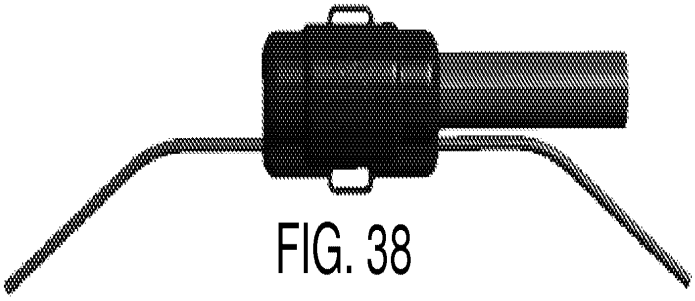

FIG. 38

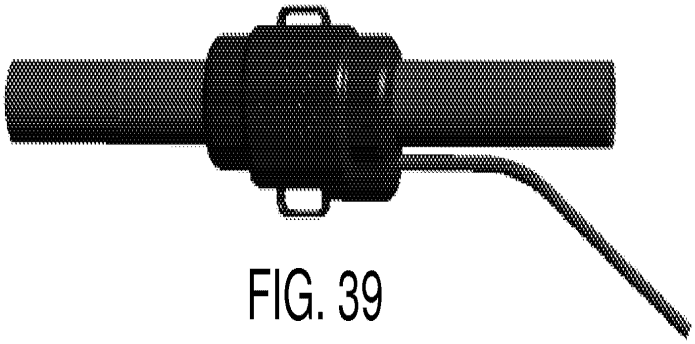

FIG. 39

FIG. 40

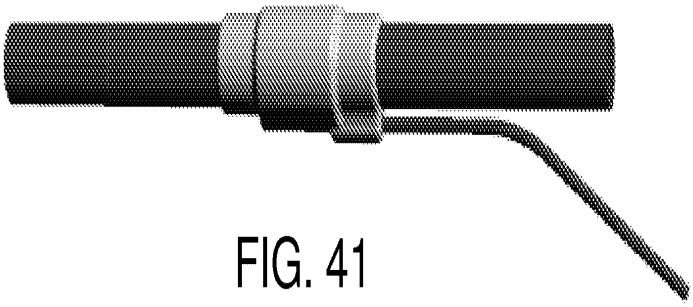

FIG. 41

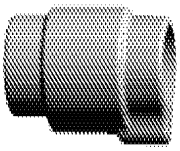

FIG. 42

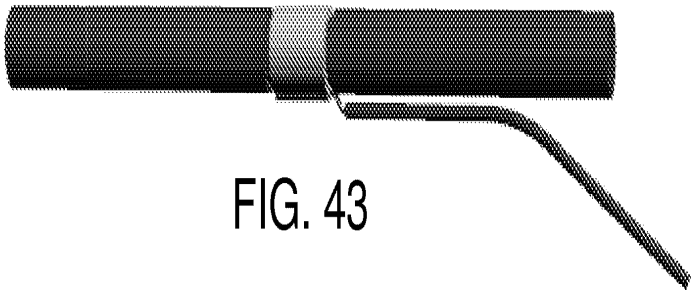

FIG. 43

FIG. 44

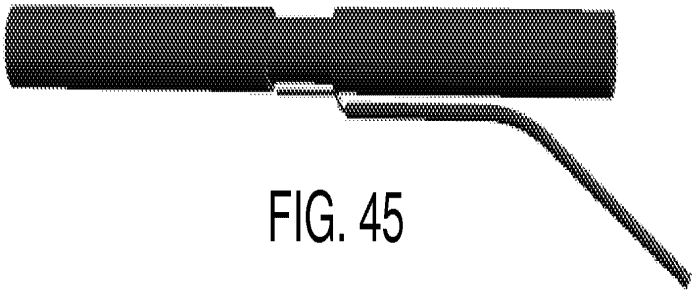

FIG. 45

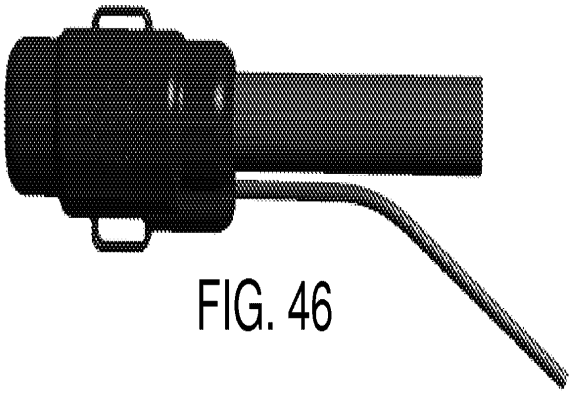

FIG. 46

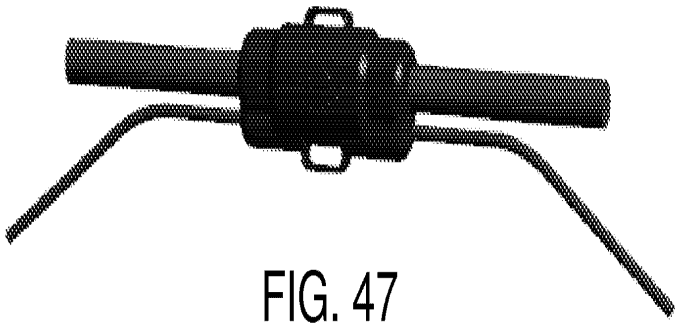

FIG. 47

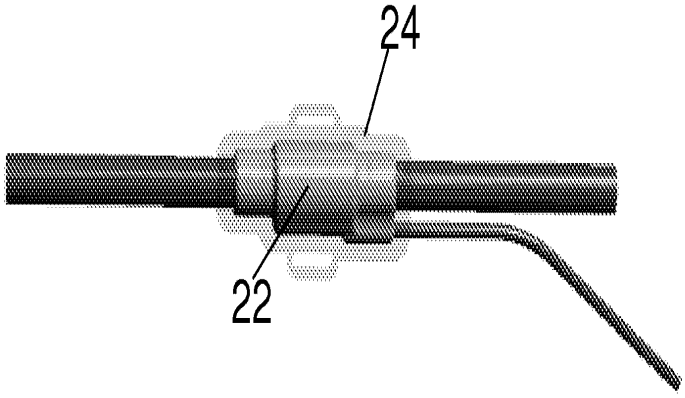

FIG. 48

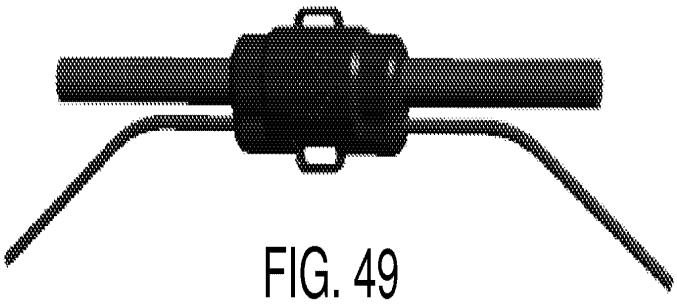

FIG. 49

FIG. 50

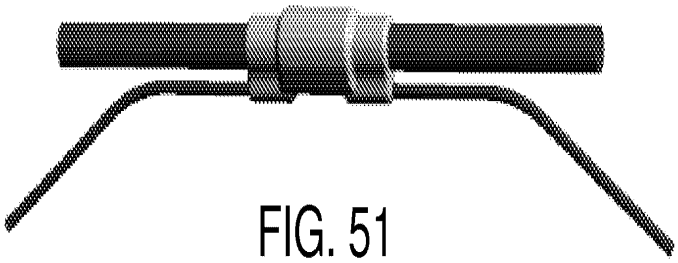

FIG. 51

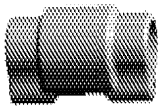

FIG. 52

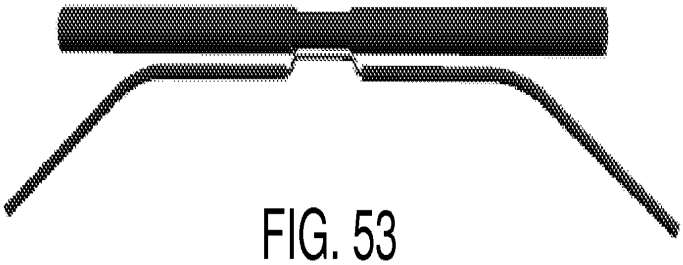

FIG. 53

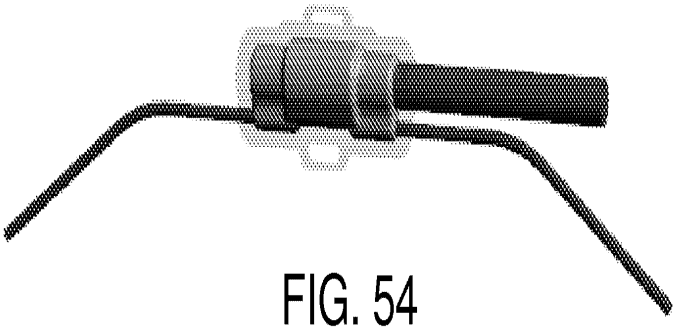

FIG. 54

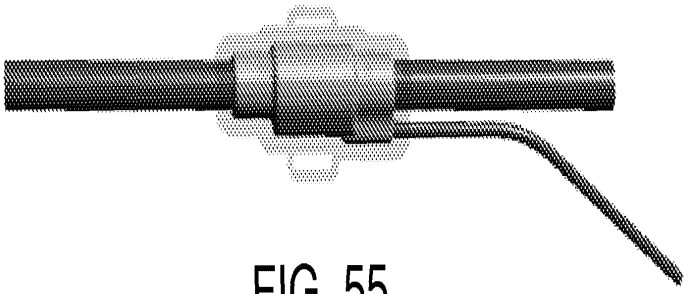

FIG. 55

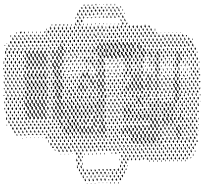

FIG. 56

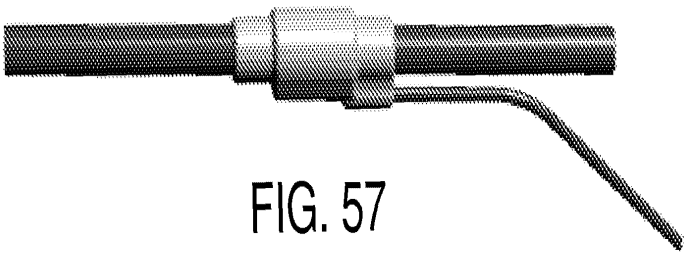

FIG. 57

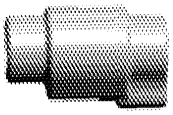

FIG. 58

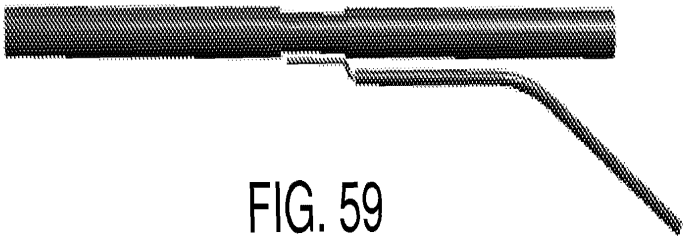

FIG. 59

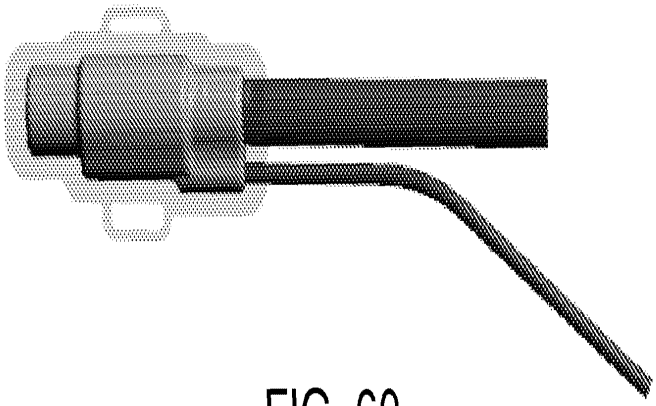

FIG. 60

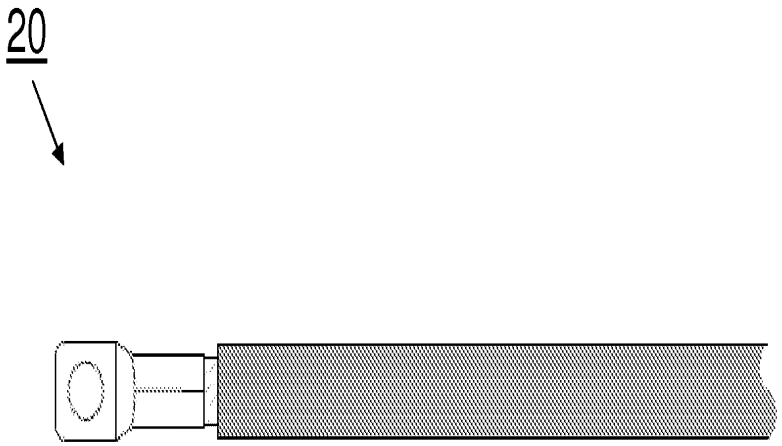

FIG. 61

Electronic Patent Application Fee Transmittal

Application Number:	
Filing Date:	
Title of Invention:	LEAD ASSEMBLY FOR CONNECTING SOLAR PANEL ARRAYS TO INVERTER
First Named Inventor/Applicant Name:	Dean Solon
Filer:	Carla L. Gannon/Donna Braam
Attorney Docket Number:	SHOALS-59

Filed as Small Entity

Filing Fees for Utility under 35 USC 111(a)

Description	Fee Code	Quantity	Amount	Sub-Total in USD($)
Basic Filing:				
Utility filing Fee (Electronic filing)	4011	1	70	70
Utility Search Fee	2111	1	300	300
Utility Examination Fee	2311	1	360	360
Pages:				
Claims:				
Miscellaneous-Filing:				
Petition:				
Patent-Appeals-and-Interference:				

Description	Fee Code	Quantity	Amount	Sub-Total in USD($)
Post-Allowance-and-Post-Issuance:				
Extension-of-Time:				
Miscellaneous:				
			Total in USD ($)	**730**

Electronic Acknowledgement Receipt

EFS ID:	23447167
Application Number:	14849458
International Application Number:	
Confirmation Number:	5067
Title of Invention:	LEAD ASSEMBLY FOR CONNECTING SOLAR PANEL ARRAYS TO INVERTER
First Named Inventor/Applicant Name:	Dean Solon
Customer Number:	57825
Filer:	Carla L. Gannon/Donna Braam
Filer Authorized By:	Carla L. Gannon
Attorney Docket Number:	SHOALS-59
Receipt Date:	09-SEP-2015
Filing Date:	
Time Stamp:	19:44:55
Application Type:	Utility under 35 USC 111(a)

Payment information:

Submitted with Payment	yes
Payment Type	Credit Card
Payment was successfully received in RAM	$730
RAM confirmation Number	6051
Deposit Account	506268
Authorized User	GANNON, CARLA L

The Director of the USPTO is hereby authorized to charge indicated fees and credit any overpayment as follows:

Charge any Additional Fees required under 37 C.F.R. Section 1.16 (National application filing, search, and examination fees)

Charge any Additional Fees required under 37 C.F.R. Section 1.17 (Patent application and reexamination processing fees)

Charge any Additional Fees required under 37 C.F.R. Section 1.19 (Document supply fees)

Charge any Additional Fees required under 37 C.F.R. Section 1.21 (Miscellaneous fees and charges)

File Listing:

Document Number	Document Description	File Name	File Size(Bytes)/ Message Digest	Multi Part /.zip	Pages (if appl.)
1	Application Data Sheet	ADS_SHOALS-59.pdf	1560895 60f8470bb8b2e19f3e3bdba7095be2c2699548b4	no	7
Warnings:					
Information:					
2	Oath or Declaration filed	Declaration_SHOALS-59.pdf	262269 db580dcfe658b00b4d1100e37c420ecebf52bf9b	no	2
Warnings:					
Information:					
3	Power of Attorney	POA_SHOALS-59.pdf	702240 d6910eb87d2c537f1c44b131ba6cd73285c11671	no	3
Warnings:					
Information:					
4		ApplicationFinal_SHOALS-59.pdf	61848 3f762bf5465f2493696759038d880878cb3060f5	yes	16

Multipart Description/PDF files in .zip description

Document Description	Start	End
Specification	1	11
Claims	12	15
Abstract	16	16

Warnings:					
Information:					
5	Drawings-only black and white line drawings	FIGS_SHOALS-59.pdf	2044253 8d87b2c0856a0dc8d19b2ef11dd266fada2d82d9	no	26
Warnings:					
Information:					
6	Fee Worksheet (SB06)	fee-info.pdf	35078 ad7a17bb491a0c43b8233a5fe1441541aa23d43d	no	2

Warnings:	
Information:	
Total Files Size (in bytes):	4666583

This Acknowledgement Receipt evidences receipt on the noted date by the USPTO of the indicated documents, characterized by the applicant, and including page counts, where applicable. It serves as evidence of receipt similar to a Post Card, as described in MPEP 503.

New Applications Under 35 U.S.C. 111
If a new application is being filed and the application includes the necessary components for a filing date (see 37 CFR 1.53(b)-(d) and MPEP 506), a Filing Receipt (37 CFR 1.54) will be issued in due course and the date shown on this Acknowledgement Receipt will establish the filing date of the application.

National Stage of an International Application under 35 U.S.C. 371
If a timely submission to enter the national stage of an international application is compliant with the conditions of 35 U.S.C. 371 and other applicable requirements a Form PCT/DO/EO/903 indicating acceptance of the application as a national stage submission under 35 U.S.C. 371 will be issued in addition to the Filing Receipt, in due course.

New International Application Filed with the USPTO as a Receiving Office
If a new international application is being filed and the international application includes the necessary components for an international filing date (see PCT Article 11 and MPEP 1810), a Notification of the International Application Number and of the International Filing Date (Form PCT/RO/105) will be issued in due course, subject to prescriptions concerning national security, and the date shown on this Acknowledgement Receipt will establish the international filing date of the application.

Under the Paperwork Reduction Act of 1995, no persons are required to respond to a collection of information unless it contains a valid OMB control number.

Application Data Sheet 37 CFR 1.76	Attorney Docket Number	SHOALS-59
	Application Number	
Title of Invention	LEAD ASSEMBLY FOR CONNECTING SOLAR PANEL ARRAYS TO INVERTER	

The application data sheet is part of the provisional or nonprovisional application for which it is being submitted. The following form contains the bibliographic data arranged in a format specified by the United States Patent and Trademark Office as outlined in 37 CFR 1.76.
This document may be completed electronically and submitted to the Office in electronic format using the Electronic Filing System (EFS) or the document may be printed and included in a paper filed application.

Secrecy Order 37 CFR 5.2

☐ Portions or all of the application associated with this Application Data Sheet may fall under a Secrecy Order pursuant to 37 CFR 5.2 (Paper filers only. Applications that fall under Secrecy Order may not be filed electronically.)

Inventor Information:

Inventor 1 Remove

Legal Name

Prefix	Given Name	Middle Name	Family Name	Suffix
	Dean		Solon	

Residence Information (Select One) ◉ US Residency ◯ Non US Residency ◯ Active US Military Service

City	Gallatin	State/Province	TN	Country of Residence i	US

Mailing Address of Inventor:

Address 1	223 Woodlake Drive		
Address 2			
City	Gallatin	State/Province	TN
Postal Code	37066	Country i	US

All Inventors Must Be Listed - Additional Inventor Information blocks may be generated within this form by selecting the **Add** button. Add

Correspondence Information:

Enter either Customer Number or complete the Correspondence Information section below.
For further information see 37 CFR 1.33(a).

☐ **An Address is being provided for the correspondence Information of this application.**

Customer Number	57825		
Email Address	cgannon@carlagannonlaw.com	Add Email	Remove Email
Email Address	carlagannon@yahoo.com	Add Email	Remove Email

Application Information:

Title of the Invention	LEAD ASSEMBLY FOR CONNECTING SOLAR PANEL ARRAYS TO INVERTER		
Attorney Docket Number	SHOALS-59	Small Entity Status Claimed	☒
Application Type	Nonprovisional		
Subject Matter	Utility		
Total Number of Drawing Sheets (if any)	60	Suggested Figure for Publication (if any)	

Under the Paperwork Reduction Act of 1995, no persons are required to respond to a collection of information unless it contains a valid OMB control number.

Application Data Sheet 37 CFR 1.76	Attorney Docket Number	SHOALS-59
	Application Number	
Title of Invention	LEAD ASSEMBLY FOR CONNECTING SOLAR PANEL ARRAYS TO INVERTER	

Filing By Reference :

Only complete this section when filing an application by reference under 35 U.S.C. 111(c) and 37 CFR 1.57(a). Do not complete this section if application papers including a specification and any drawings are being filed. Any domestic benefit or foreign priority information must be provided in the appropriate section(s) below (i.e., "Domestic Benefit/National Stage Information" and "Foreign Priority Information").

For the purposes of a filing date under 37 CFR 1.53(b), the description and any drawings of the present application are replaced by this reference to the previously filed application, subject to conditions and requirements of 37 CFR 1.57(a).

Application number of the previously filed application	Filing date (YYYY-MM-DD)	Intellectual Property Authority or Country

Publication Information:

☐ Request Early Publication (Fee required at time of Request 37 CFR 1.219)

☐ **Request Not to Publish.** I hereby request that the attached application not be published under 35 U.S.C. 122(b) and certify that the invention disclosed in the attached application **has not and will not** be the subject of an application filed in another country, or under a multilateral international agreement, that requires publication at eighteen months after filing.

Representative Information:

Representative information should be provided for all practitioners having a power of attorney in the application. Providing this information in the Application Data Sheet does not constitute a power of attorney in the application (see 37 CFR 1.32).
Either enter Customer Number or complete the Representative Name section below. If both sections are completed the customer Number will be used for the Representative Information during processing.

Please Select One:	◉ Customer Number	◯ US Patent Practitioner	◯ Limited Recognition (37 CFR 11.9)
Customer Number	57825		

Domestic Benefit/National Stage Information:

This section allows for the applicant to either claim benefit under 35 U.S.C. 119(e), 120, 121, or 365(c) or indicate National Stage entry from a PCT application. Providing this information in the application data sheet constitutes the specific reference required by 35 U.S.C. 119(e) or 120, and 37 CFR 1.78.
When referring to the current application, please leave the application number blank.

Prior Application Status			Remove
Application Number	Continuity Type	Prior Application Number	Filing Date (YYYY-MM-DD)
	Claims benefit of provisional	62047773	2014-09-09

Additional Domestic Benefit/National Stage Data may be generated within this form by selecting the **Add** button. Add

Foreign Priority Information:

Voltage, LLC
EX1021-365

Under the Paperwork Reduction Act of 1995, no persons are required to respond to a collection of information unless it contains a valid OMB control number.

Application Data Sheet 37 CFR 1.76	Attorney Docket Number	SHOALS-59
	Application Number	
Title of Invention	LEAD ASSEMBLY FOR CONNECTING SOLAR PANEL ARRAYS TO INVERTER	

This section allows for the applicant to claim priority to a foreign application. Providing this information in the application data sheet constitutes the claim for priority as required by 35 U.S.C. 119(b) and 37 CFR 1.55(d). When priority is claimed to a foreign application that is eligible for retrieval under the priority document exchange program (PDX) [i] the information will be used by the Office to automatically attempt retrieval pursuant to 37 CFR 1.55(h)(1) and (2). Under the PDX program, applicant bears the ultimate responsibility for ensuring that a copy of the foreign application is received by the Office from the participating foreign intellectual property office, or a certified copy of the foreign priority application is filed, within the time period specified in 37 CFR 1.55(g)(1).

Remove

Application Number	Country [i]	Filing Date (YYYY-MM-DD)	Access Code [i] (if applicable)

Additional Foreign Priority Data may be generated within this form by selecting the **Add** button. Add

Statement under 37 CFR 1.55 or 1.78 for AIA (First Inventor to File) Transition Applications

☐ This application (1) claims priority to or the benefit of an application filed before March 16, 2013 and (2) also contains, or contained at any time, a claim to a claimed invention that has an effective filing date on or after March 16, 2013.
NOTE: By providing this statement under 37 CFR 1.55 or 1.78, this application, with a filing date on or after March 16, 2013, will be examined under the first inventor to file provisions of the AIA.

Authorization to Permit Access:

☒ Authorization to Permit Access to the Instant Application by the Participating Offices

Under the Paperwork Reduction Act of 1995, no persons are required to respond to a collection of information unless it contains a valid OMB control number.

Application Data Sheet 37 CFR 1.76	Attorney Docket Number	SHOALS-59
	Application Number	
Title of Invention	LEAD ASSEMBLY FOR CONNECTING SOLAR PANEL ARRAYS TO INVERTER	

If checked, the undersigned hereby grants the USPTO authority to provide the European Patent Office (EPO), the Japan Patent Office (JPO), the Korean Intellectual Property Office (KIPO), the World Intellectual Property Office (WIPO), and any other intellectual property offices in which a foreign application claiming priority to the instant patent application is filed access to the instant patent application. See 37 CFR 1.14(c) and (h). This box should not be checked if the applicant does not wish the EPO, JPO, KIPO, WIPO, or other intellectual property office in which a foreign application claiming priority to the instant patent application is filed to have access to the instant patent application.

In accordance with 37 CFR 1.14(h)(3), access will be provided to a copy of the instant patent application with respect to: 1) the instant patent application-as-filed; 2) any foreign application to which the instant patent application claims priority under 35 U.S.C. 119(a)-(d) if a copy of the foreign application that satisfies the certified copy requirement of 37 CFR 1.55 has been filed in the instant patent application; and 3) any U.S. application-as-filed from which benefit is sought in the instant patent application.

In accordance with 37 CFR 1.14(c), access may be provided to information concerning the date of filing this Authorization.

Applicant Information:

Providing assignment information in this section does not substitute for compliance with any requirement of part 3 of Title 37 of CFR to have an assignment recorded by the Office.

Applicant 1 Remove

If the applicant is the inventor (or the remaining joint inventor or inventors under 37 CFR 1.45), this section should not be completed. The information to be provided in this section is the name and address of the legal representative who is the applicant under 37 CFR 1.43; or the name and address of the assignee, person to whom the inventor is under an obligation to assign the invention, or person who otherwise shows sufficient proprietary interest in the matter who is the applicant under 37 CFR 1.46. If the applicant is an applicant under 37 CFR 1.46 (assignee, person to whom the inventor is obligated to assign, or person who otherwise shows sufficient proprietary interest) together with one or more joint inventors, then the joint inventor or inventors who are also the applicant should be identified in this section.

Clear

◯ Assignee	◯ Legal Representative under 35 U.S.C. 117	◯ Joint Inventor
◯ Person to whom the inventor is obligated to assign.	◯ Person who shows sufficient proprietary interest	

If applicant is the legal representative, indicate the authority to file the patent application, the inventor is:

Name of the Deceased or Legally Incapacitated Inventor :

If the Applicant is an Organization check here. ☐

Prefix	**Given Name**	Middle Name	**Family Name**	Suffix

Under the Paperwork Reduction Act of 1995, no persons are required to respond to a collection of information unless it contains a valid OMB control number.

Application Data Sheet 37 CFR 1.76	Attorney Docket Number	SHOALS-59
	Application Number	
Title of Invention	LEAD ASSEMBLY FOR CONNECTING SOLAR PANEL ARRAYS TO INVERTER	

Mailing Address Information:			
Address 1			
Address 2			
City		**State/Province**	
Country i		Postal Code	
Phone Number		Fax Number	
Email Address			

Additional Applicant Data may be generated within this form by selecting the Add button. Add

Assignee Information including Non-Applicant Assignee Information:

Providing assignment information in this section does not subsitute for compliance with any requirement of part 3 of Title 37 of CFR to have an assignment recorded by the Office.

Assignee 1

Complete this section if assignee information, including non-applicant assignee information, is desired to be included on the patent application publication . An assignee-applicant identified in the "Applicant Information" section will appear on the patent application publication as an applicant. For an assignee-applicant, complete this section only if identification as an assignee is also desired on the patent application publication.

Remove

If the Assignee or Non-Applicant Assignee is an Organization check here. ☐

Prefix	**Given Name**	Middle Name	**Family Name**	Suffix

Mailing Address Information For Assignee including Non-Applicant Assignee:			
Address 1			
Address 2			
City		**State/Province**	
Country i		Postal Code	
Phone Number		Fax Number	
Email Address			

Additional Assignee or Non-Applicant Assignee Data may be generated within this form by selecting the Add button. Add

Under the Paperwork Reduction Act of 1995, no persons are required to respond to a collection of information unless it contains a valid OMB control number.

Application Data Sheet 37 CFR 1.76	Attorney Docket Number	SHOALS-59
	Application Number	
Title of Invention	LEAD ASSEMBLY FOR CONNECTING SOLAR PANEL ARRAYS TO INVERTER	

Signature:

Remove

NOTE: This form must be signed in accordance with 37 CFR 1.33. See 37 CFR 1.4 for signature requirements and certifications					
Signature	/Carla L. Gannon/			Date (YYYY-MM-DD)	2015-09-09
First Name	Carla	Last Name	Gannon	Registration Number	56358
Additional Signature may be generated within this form by selecting the Add button.					Add

This collection of information is required by 37 CFR 1.76. The information is required to obtain or retain a benefit by the public which is to file (and by the USPTO to process) an application. Confidentiality is governed by 35 U.S.C. 122 and 37 CFR 1.14. This collection is estimated to take 23 minutes to complete, including gathering, preparing, and submitting the completed application data sheet form to the USPTO. Time will vary depending upon the individual case. Any comments on the amount of time you require to complete this form and/or suggestions for reducing this burden, should be sent to the Chief Information Officer, U.S. Patent and Trademark Office, U.S. Department of Commerce, P.O. Box 1450, Alexandria, VA 22313-1450. DO NOT SEND FEES OR COMPLETED FORMS TO THIS ADDRESS. **SEND TO: Commissioner for Patents, P.O. Box 1450, Alexandria, VA 22313-1450.**

Privacy Act Statement

The Privacy Act of 1974 (P.L. 93-579) requires that you be given certain information in connection with your submission of the attached form related to a patent application or patent. Accordingly, pursuant to the requirements of the Act, please be advised that: (1) the general authority for the collection of this information is 35 U.S.C. 2(b)(2); (2) furnishing of the information solicited is voluntary; and (3) the principal purpose for which the information is used by the U.S. Patent and Trademark Office is to process and/or examine your submission related to a patent application or patent. If you do not furnish the requested information, the U.S. Patent and Trademark Office may not be able to process and/or examine your submission, which may result in termination of proceedings or abandonment of the application or expiration of the patent.

The information provided by you in this form will be subject to the following routine uses:

1. The information on this form will be treated confidentially to the extent allowed under the Freedom of Information Act (5 U.S.C. 552) and the Privacy Act (5 U.S.C. 552a). Records from this system of records may be disclosed to the Department of Justice to determine whether the Freedom of Information Act requires disclosure of these records.

2. A record from this system of records may be disclosed, as a routine use, in the course of presenting evidence to a court, magistrate, or administrative tribunal, including disclosures to opposing counsel in the course of settlement negotiations.

3. A record in this system of records may be disclosed, as a routine use, to a Member of Congress submitting a request involving an individual, to whom the record pertains, when the individual has requested assistance from the Member with respect to the subject matter of the record.

4. A record in this system of records may be disclosed, as a routine use, to a contractor of the Agency having need for the information in order to perform a contract. Recipients of information shall be required to comply with the requirements of the Privacy Act of 1974, as amended, pursuant to 5 U.S.C. 552a(m).

5. A record related to an International Application filed under the Patent Cooperation Treaty in this system of records may be disclosed, as a routine use, to the International Bureau of the World Intellectual Property Organization, pursuant to the Patent Cooperation Treaty.

6. A record in this system of records may be disclosed, as a routine use, to another federal agency for purposes of National Security review (35 U.S.C. 181) and for review pursuant to the Atomic Energy Act (42 U.S.C. 218(c)).

7. A record from this system of records may be disclosed, as a routine use, to the Administrator, General Services, or his/her designee, during an inspection of records conducted by GSA as part of that agency's responsibility to recommend improvements in records management practices and programs, under authority of 44 U.S.C. 2904 and 2906. Such disclosure shall be made in accordance with the GSA regulations governing inspection of records for this purpose, and any other relevant (i.e., GSA or Commerce) directive. Such disclosure shall not be used to make determinations about individuals.

8. A record from this system of records may be disclosed, as a routine use, to the public after either publication of the application pursuant to 35 U.S.C. 122(b) or issuance of a patent pursuant to 35 U.S.C. 151. Further, a record may be disclosed, subject to the limitations of 37 CFR 1.14, as a routine use, to the public if the record was filed in an application which became abandoned or in which the proceedings were terminated and which application is referenced by either a published application, an application open to public inspections or an issued patent.

9. A record from this system of records may be disclosed, as a routine use, to a Federal, State, or local law enforcement agency, if the USPTO becomes aware of a violation or potential violation of law or regulation.

Voltage, LLC
EX1021-370

PTO/AIA/01 (06-12)
Approved for use through 01/31/2014. OMB 0651-0032
U.S. Patent and Trademark Office; U.S. DEPARTMENT OF COMMERCE
Under the Paperwork Reduction Act of 1995, no persons are required to respond to a collection of information unless it displays a valid OMB control number.

DECLARATION (37 CFR 1.63) FOR UTILITY OR DESIGN APPLICATION USING AN APPLICATION DATA SHEET (37 CFR 1.76)

Title of Invention	LEAD ASSEMBLY FOR CONNECTING SOLAR PANEL ARRAYS TO INVERTER

As the below named inventor, I hereby declare that:

This declaration is directed to:

- [x] The attached application, or
- [ ] United States application or PCT international application number _____

  filed on _____.

The above-identified application was made or authorized to be made by me.

I believe that I am the original inventor or an original joint inventor of a claimed invention in the application.

I hereby acknowledge that any willful false statement made in this declaration is punishable under 18 U.S.C. 1001 by fine or imprisonment of not more than five (5) years, or both.

WARNING:

Petitioner/applicant is cautioned to avoid submitting personal information in documents filed in a patent application that may contribute to identity theft. Personal information such as social security numbers, bank account numbers, or credit card numbers (other than a check or credit card authorization form PTO-2038 submitted for payment purposes) is never required by the USPTO to support a petition or an application. If this type of personal information is included in documents submitted to the USPTO, petitioners/applicants should consider redacting such personal information from the documents before submitting them to the USPTO. Petitioner/applicant is advised that the record of a patent application is available to the public after publication of the application (unless a non-publication request in compliance with 37 CFR 1.213(a) is made in the application) or issuance of a patent. Furthermore, the record from an abandoned application may also be available to the public if the application is referenced in a published application or an issued patent (see 37 CFR 1.14). Checks and credit card authorization forms PTO-2038 submitted for payment purposes are not retained in the application file and therefore are not publicly available.

LEGAL NAME OF INVENTOR

Inventor: Dean Solon Date (Optional): 09/09/2015

Signature: _____

Note: An application data sheet (PTO/AIA/14 or equivalent), including naming the entire inventive entity, must accompany this form. Use an additional PTO/SB/AIA01 form for each additional inventor.

This collection of information is required by 35 U.S.C. 115 and 37 CFR 1.63. The information is required to obtain or retain a benefit by the public which is to file (and by the USPTO to process) an application. Confidentiality is governed by 35 U.S.C. 122 and 37 CFR 1.11 and 1.14. This collection is estimated to take 1 minute to complete, including gathering, preparing, and submitting the completed application form to the USPTO. Time will vary depending upon the individual case. Any comments on the amount of time you require to complete this form and/or suggestions for reducing this burden, should be sent to the Chief Information Officer, U.S. Patent and Trademark Office, U.S. Department of Commerce, P.O. Box 1450, Alexandria, VA 22313-1450. DO NOT SEND FEES OR COMPLETED FORMS TO THIS ADDRESS. **SEND TO: Commissioner for Patents, P.O. Box 1450, Alexandria, VA 22313-1450.**

If you need assistance in completing the form, call 1-800-PTO-9199 and select option 2.

Privacy Act Statement

The **Privacy Act of 1974 (P.L. 93-579)** requires that you be given certain information in connection with your submission of the attached form related to a patent application or patent. Accordingly, pursuant to the requirements of the Act, please be advised that: (1) the general authority for the collection of this information is 35 U.S.C. 2(b)(2); (2) furnishing of the information solicited is voluntary; and (3) the principal purpose for which the information is used by the U.S. Patent and Trademark Office is to process and/or examine your submission related to a patent application or patent. If you do not furnish the requested information, the U.S. Patent and Trademark Office may not be able to process and/or examine your submission, which may result in termination of proceedings or abandonment of the application or expiration of the patent.

The information provided by you in this form will be subject to the following routine uses:

1. The information on this form will be treated confidentially to the extent allowed under the Freedom of Information Act (5 U.S.C. 552) and the Privacy Act (5 U.S.C 552a). Records from this system of records may be disclosed to the Department of Justice to determine whether disclosure of these records is required by the Freedom of Information Act.
2. A record from this system of records may be disclosed, as a routine use, in the course of presenting evidence to a court, magistrate, or administrative tribunal, including disclosures to opposing counsel in the course of settlement negotiations.
3. A record in this system of records may be disclosed, as a routine use, to a Member of Congress submitting a request involving an individual, to whom the record pertains, when the individual has requested assistance from the Member with respect to the subject matter of the record.
4. A record in this system of records may be disclosed, as a routine use, to a contractor of the Agency having need for the information in order to perform a contract. Recipients of information shall be required to comply with the requirements of the Privacy Act of 1974, as amended, pursuant to 5 U.S.C. 552a(m).
5. A record related to an International Application filed under the Patent Cooperation Treaty in this system of records may be disclosed, as a routine use, to the International Bureau of the World Intellectual Property Organization, pursuant to the Patent Cooperation Treaty.
6. A record in this system of records may be disclosed, as a routine use, to another federal agency for purposes of National Security review (35 U.S.C. 181) and for review pursuant to the Atomic Energy Act (42 U.S.C. 218(c)).
7. A record from this system of records may be disclosed, as a routine use, to the Administrator, General Services, or his/her designee, during an inspection of records conducted by GSA as part of that agency's responsibility to recommend improvements in records management practices and programs, under authority of 44 U.S.C. 2904 and 2906. Such disclosure shall be made in accordance with the GSA regulations governing inspection of records for this purpose, and any other relevant (*i.e.*, GSA or Commerce) directive. Such disclosure shall not be used to make determinations about individuals.
8. A record from this system of records may be disclosed, as a routine use, to the public after either publication of the application pursuant to 35 U.S.C. 122(b) or issuance of a patent pursuant to 35 U.S.C. 151. Further, a record may be disclosed, subject to the limitations of 37 CFR 1.14, as a routine use, to the public if the record was filed in an application which became abandoned or in which the proceedings were terminated and which application is referenced by either a published application, an application open to public inspection or an issued patent.
9. A record from this system of records may be disclosed, as a routine use, to a Federal, State, or local law enforcement agency, if the USPTO becomes aware of a violation or potential violation of law or regulation.

SCORE Placeholder Sheet for IFW Content

Application Number: 14849458 Document Date: 09/09/2015

The presence of this form in the IFW record indicates that the following document type was received in electronic format on the date identified above. This content is stored in the SCORE database.

- Drawings – Other than Black and White Line Drawings

Since this was an electronic submission, there is no physical artifact folder, no artifact folder is recorded in PALM, and no paper documents or physical media exist. The TIFF images in the IFW record were created from the original documents that are stored in SCORE.

To access the documents in the SCORE database, refer to instructions below.

At the time of document entry (noted above):

- Examiners may access SCORE content via the eDAN interface.
- Other USPTO employees can bookmark the current SCORE URL (http://Score.uspto.gov/ScoreAccessWeb/).
- External customers may access SCORE content via the Public and Private PAIR interfaces.

Form Revision Date: September 30, 2013