US008962998B2

(12) **United States Patent**
**Solon**

(10) **Patent No.: US 8,962,998 B2**
(45) **Date of Patent: Feb. 24, 2015**

(54) **SOLAR PANEL JUNCTION BOX CAPABLE OF INTEGRATING WITH A VARIETY OF ACCESSORY MODULES, AND METHOD OF USE**

(71) Applicant: **Dean Solon**, Gallatin, TN (US)

(72) Inventor: **Dean Solon**, Gallatin, TN (US)

(73) Assignee: **Shoals Technologies Group, LLC**, Portland, TN (US)

( * ) Notice: Subject to any disclaimer, the term of this patent is extended or adjusted under 35 U.S.C. 154(b) by 0 days.

(21) Appl. No.: **13/761,532**

(22) Filed: **Feb. 7, 2013**

(65) **Prior Publication Data**

US 2013/0203285 A1 Aug. 8, 2013

**Related U.S. Application Data**

(60) Provisional application No. 61/596,310, filed on Feb. 8, 2012.

(51) **Int. Cl.**

| | |
|---|---|
| ***H01J 5/00*** | (2006.01) |
| ***H01J 15/00*** | (2006.01) |
| ***H01K 5/00*** | (2006.01) |
| ***H01R 13/46*** | (2006.01) |
| ***H01R 13/514*** | (2006.01) |
| ***H01L 31/048*** | (2014.01) |
| *H01R 31/02* | (2006.01) |

(52) **U.S. Cl.**

CPC ..... ***H01R 13/46*** (2013.01); ***H01R 13/514*** (2013.01); ***H01L 31/0485*** (2013.01); *H01R 31/02* (2013.01); *Y02E 10/50* (2013.01)

USPC ..... **174/50.52**; 174/50

(58) **Field of Classification Search**

CPC .... H01L 31/0485; Y02E 10/50; H01R 13/46; H01R 13/514; H01R 31/02

USPC ..... 361/752; 174/50, 50.64, 50.52, 17 R, 174/51; 439/540.1, 76.1, 441, 835, 879

See application file for complete search history.

(56) **References Cited**

U.S. PATENT DOCUMENTS

| | | | |
|---|---|---|---|
| 3,258,522 | A | 6/1966 | Bartos et al. |
| 3,852,516 | A | 12/1974 | Vander Ploog et al. |
| 3,980,374 | A | 9/1976 | Fallot |
| 4,310,211 | A | 1/1982 | Bunnell et al. |
| 4,764,123 | A | 8/1988 | Shaw et al. |
| 4,849,580 | A | 7/1989 | Reuter |
| 4,870,878 | A | 10/1989 | Butler et al. |
| 5,099,088 | A | 3/1992 | Usami et al. |

(Continued)

OTHER PUBLICATIONS

Wind&Sun (Solar Electric Power Discussion Forum by Northern Arizona Wind & Sun) [online]. Flagstaff, AZ: "where to buy THWN-2 cable?" Oct./Nov. 2006 [retrieved Aug. 6, 2010]. Retrieved from the Internet: <URL:http://www.wind-sun.com/ForumVB/archive/index.php?t-277.html> selected exceprts from Oct. 20, 2006, Nov. 6-7, 2006.

(Continued)

*Primary Examiner* — Yuriy Semenenko
(74) *Attorney, Agent, or Firm* — Carla Gannon Law

(57) **ABSTRACT**

A junction box is affixed to, and electrically coupled with, a solar panel. The junction box is configured to releaseably engage and disengage accessory modules, thereby allowing accessory modules to be replaced or exchanged easily. Accessory modules are electrically coupled with other accessory modules in the solar panel string. The furthest downstream accessory module is connected to a wire harness, which is connected to a central combiner box.

**6 Claims, 10 Drawing Sheets**

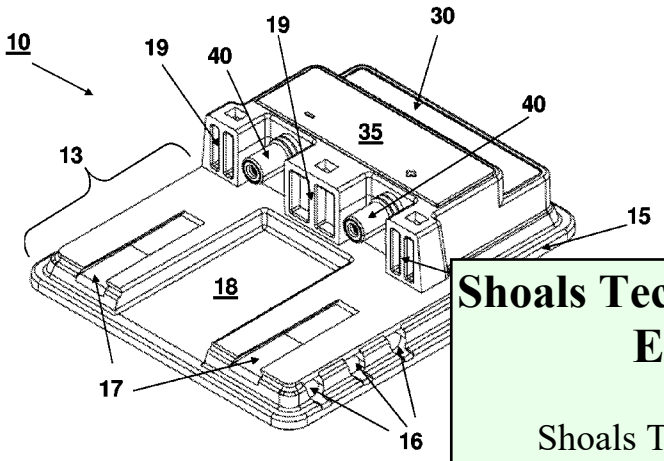


**Shoals Technologies Group, LLC**
**EXHIBIT 2008**
Voltage, LLC v.
Shoals Technologies Group, LLC
**PGR2024-00022**

US008962998B2

(12) **United States Patent**
**Solon**

(10) **Patent No.: US 8,962,998 B2**
(45) **Date of Patent: Feb. 24, 2015**

(54) **SOLAR PANEL JUNCTION BOX CAPABLE OF INTEGRATING WITH A VARIETY OF ACCESSORY MODULES, AND METHOD OF USE**

(71) Applicant: **Dean Solon**, Gallatin, TN (US)

(72) Inventor: **Dean Solon**, Gallatin, TN (US)

(73) Assignee: **Shoals Technologies Group, LLC**, Portland, TN (US)

( * ) Notice: Subject to any disclaimer, the term of this patent is extended or adjusted under 35 U.S.C. 154(b) by 0 days.

(21) Appl. No.: **13/761,532**

(22) Filed: **Feb. 7, 2013**

(65) **Prior Publication Data**

US 2013/0203285 A1 Aug. 8, 2013

**Related U.S. Application Data**

(60) Provisional application No. 61/596,310, filed on Feb. 8, 2012.

(51) **Int. Cl.**

| | |
|---|---|
| ***H01J 5/00*** | (2006.01) |
| ***H01J 15/00*** | (2006.01) |
| ***H01K 5/00*** | (2006.01) |
| ***H01R 13/46*** | (2006.01) |
| ***H01R 13/514*** | (2006.01) |
| ***H01L 31/048*** | (2014.01) |
| *H01R 31/02* | (2006.01) |

(52) **U.S. Cl.**

CPC ..... ***H01R 13/46*** (2013.01); ***H01R 13/514*** (2013.01); ***H01L 31/0485*** (2013.01); *H01R 31/02* (2013.01); *Y02E 10/50* (2013.01)

USPC ..... **174/50.52**; 174/50

(58) **Field of Classification Search**

CPC .... H01L 31/0485; Y02E 10/50; H01R 13/46; H01R 13/514; H01R 31/02

USPC ..... 361/752; 174/50, 50.64, 50.52, 17 R, 174/51; 439/540.1, 76.1, 441, 835, 879

See application file for complete search history.

(56) **References Cited**

U.S. PATENT DOCUMENTS

| | | | |
|---|---|---|---|
| 3,258,522 | A | 6/1966 | Bartos et al. |
| 3,852,516 | A | 12/1974 | Vander Ploog et al. |
| 3,980,374 | A | 9/1976 | Fallot |
| 4,310,211 | A | 1/1982 | Bunnell et al. |
| 4,764,123 | A | 8/1988 | Shaw et al. |
| 4,849,580 | A | 7/1989 | Reuter |
| 4,870,878 | A | 10/1989 | Butler et al. |
| 5,099,088 | A | 3/1992 | Usami et al. |

(Continued)

OTHER PUBLICATIONS

Wind&Sun (Solar Electric Power Discussion Forum by Northern Arizona Wind & Sun) [online]. Flagstaff, AZ: "where to buy THWN-2 cable?" Oct./Nov. 2006 [retrieved Aug. 6, 2010]. Retrieved from the Internet: <URL:http://www.wind-sun.com/ForumVB/archive/index.php?t-277.html> selected exceprts from Oct. 20, 2006, Nov. 6-7, 2006.

(Continued)

*Primary Examiner* — Yuriy Semenenko
(74) *Attorney, Agent, or Firm* — Carla Gannon Law

(57) **ABSTRACT**

A junction box is affixed to, and electrically coupled with, a solar panel. The junction box is configured to releaseably engage and disengage accessory modules, thereby allowing accessory modules to be replaced or exchanged easily. Accessory modules are electrically coupled with other accessory modules in the solar panel string. The furthest downstream accessory module is connected to a wire harness, which is connected to a central combiner box.

**6 Claims, 10 Drawing Sheets**

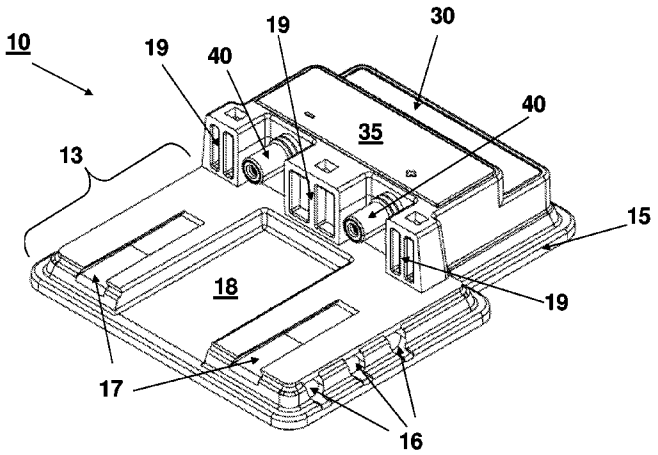

(56) **References Cited**

U.S. PATENT DOCUMENTS

| | | | | |
|---|---|---|---|---|
| 5,226,838 | A | 7/1993 | Hsu | |
| 5,358,588 | A | 10/1994 | Tahara et al. | |
| 6,359,226 | B1 | 3/2002 | Biddell et al. | |
| 7,201,596 | B1 | 4/2007 | Bukovnik et al. | |
| 7,275,967 | B1 | 10/2007 | Ollif | |
| 7,378,594 | B2 | 5/2008 | Bigelow et al. | |
| 7,645,938 | B2 | 1/2010 | Kogure et al. | |
| 8,172,938 | B2 | 5/2012 | Alright et al. | |
| 2005/0068820 | A1* | 3/2005 | Radosevich et al. | 365/202 |
| 2005/0217888 | A1 | 10/2005 | Arai et al. | |
| 2006/0049368 | A1 | 3/2006 | Culbert | |
| 2008/0011347 | A1 | 1/2008 | Aoyama et al. | |
| 2008/0289682 | A1 | 11/2008 | Adriani et al. | |
| 2009/0014055 | A1 | 1/2009 | Beck et al. | |
| 2009/0098743 | A1 | 4/2009 | Wadsworth | |
| 2009/0206666 | A1* | 8/2009 | Sella et al. | 307/43 |
| 2010/0078058 | A1* | 4/2010 | Nightingale et al. | 136/244 |
| 2010/0117453 | A1* | 5/2010 | Langgood et al. | 307/75 |
| 2010/0139733 | A1 | 6/2010 | Jonczyk et al. | |
| 2010/0326490 | A1 | 12/2010 | Tagliareni et al. | |
| 2011/0061705 | A1* | 3/2011 | Croft et al. | 136/244 |
| 2012/0033392 | A1* | 2/2012 | Golubovic et al. | 361/752 |
| 2013/0026838 | A1 | 1/2013 | Ma et al. | |

OTHER PUBLICATIONS

PlastiDip Multi-Purpose Rubber Coating, Performix Handout regarding descriptions, specifications, alternative products, surface preparation, spraying, recommended equipment and settings, spraying, dipping, brushing, hints, additional applications ideas, Technical Data Sheet #5, two pages, Revised Feb. 25, 2009. PlastiDip International, 3920 Pheasant Ridge Dr., Blaine, MN 55449, Phone 800-969-5432, Fax 763-785-2058, PLASTI DIP.com.

Material Safety Data Sheet, Performix Brand Handout, Various sections regarding manufacturers name, hazardous ingredients information, physical and chemical characteristics, fire and explosion hazard data, optional hazard ratings identification, reactivity and stability data, health hazard data, medical conditions generally aggravated by exposure, precautions for safe handling and use, control measures, two pages. Date Material Safety Data Sheet (MSDS) was prepared May 25, 2007 (by Mark Kenow).

* cited by examiner

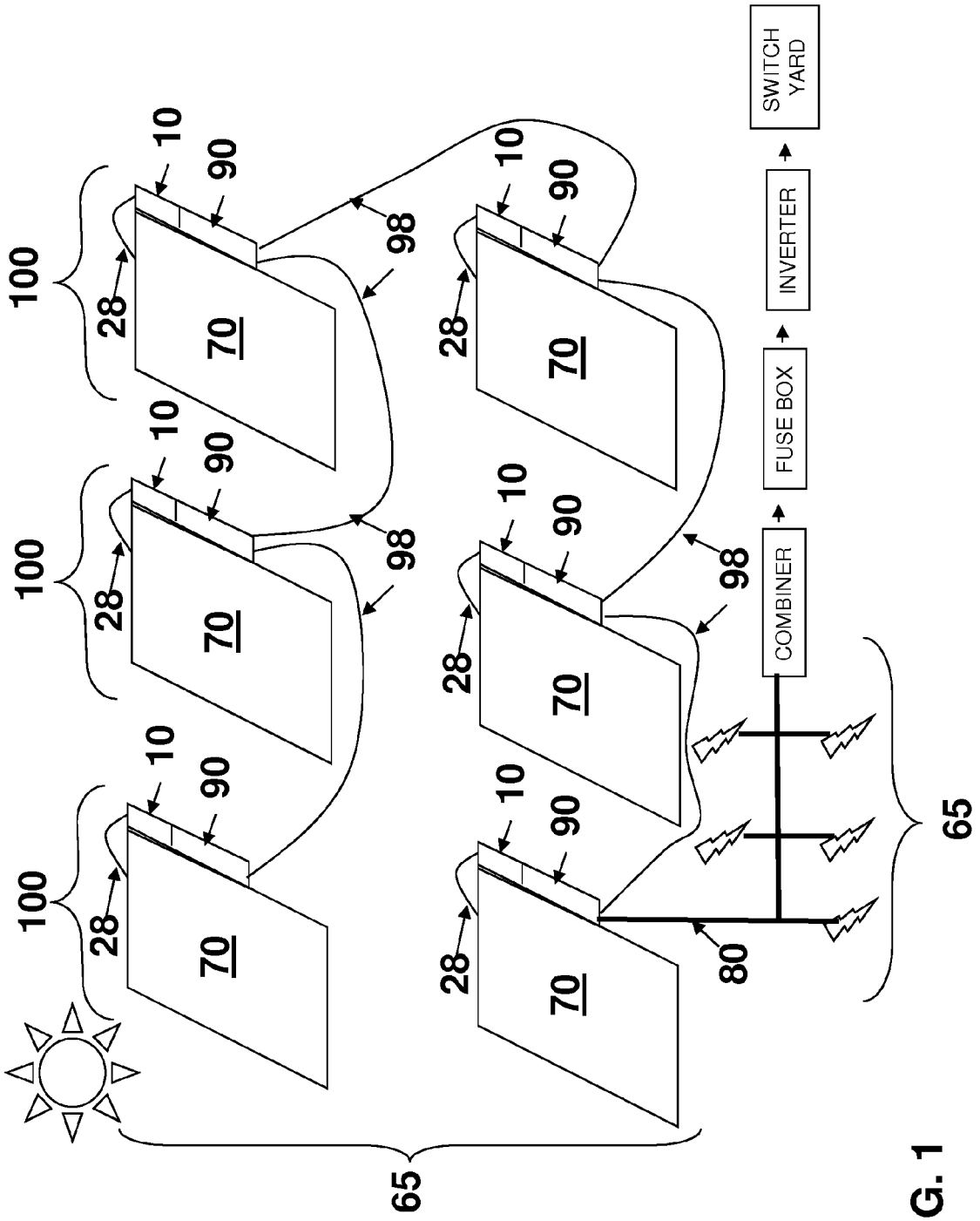
100
10
90
28
70
98
65
80
COMBINER
FUSE BOX
INVERTER
SWITCH YARD

FIG. 1

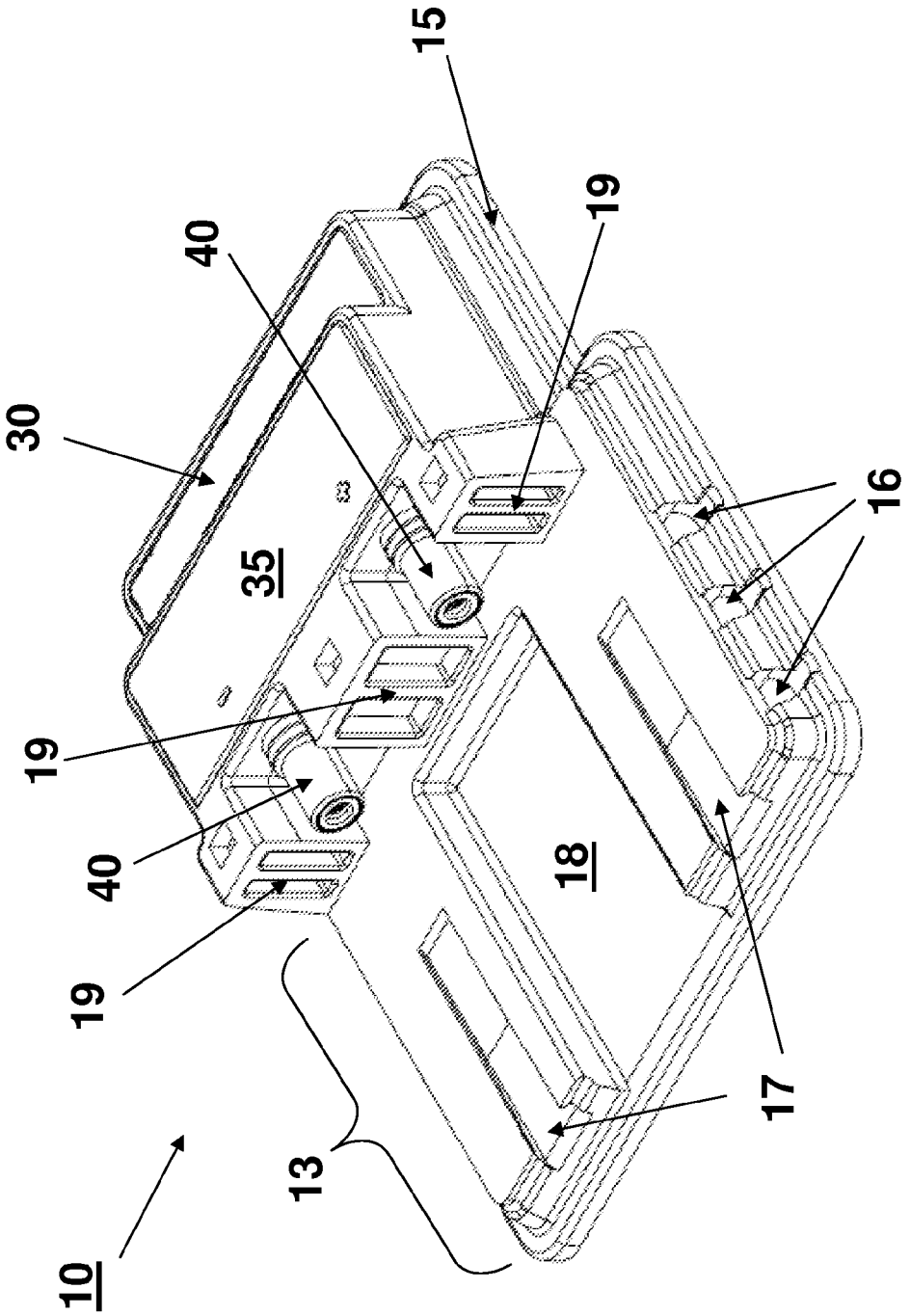


FIG. 2

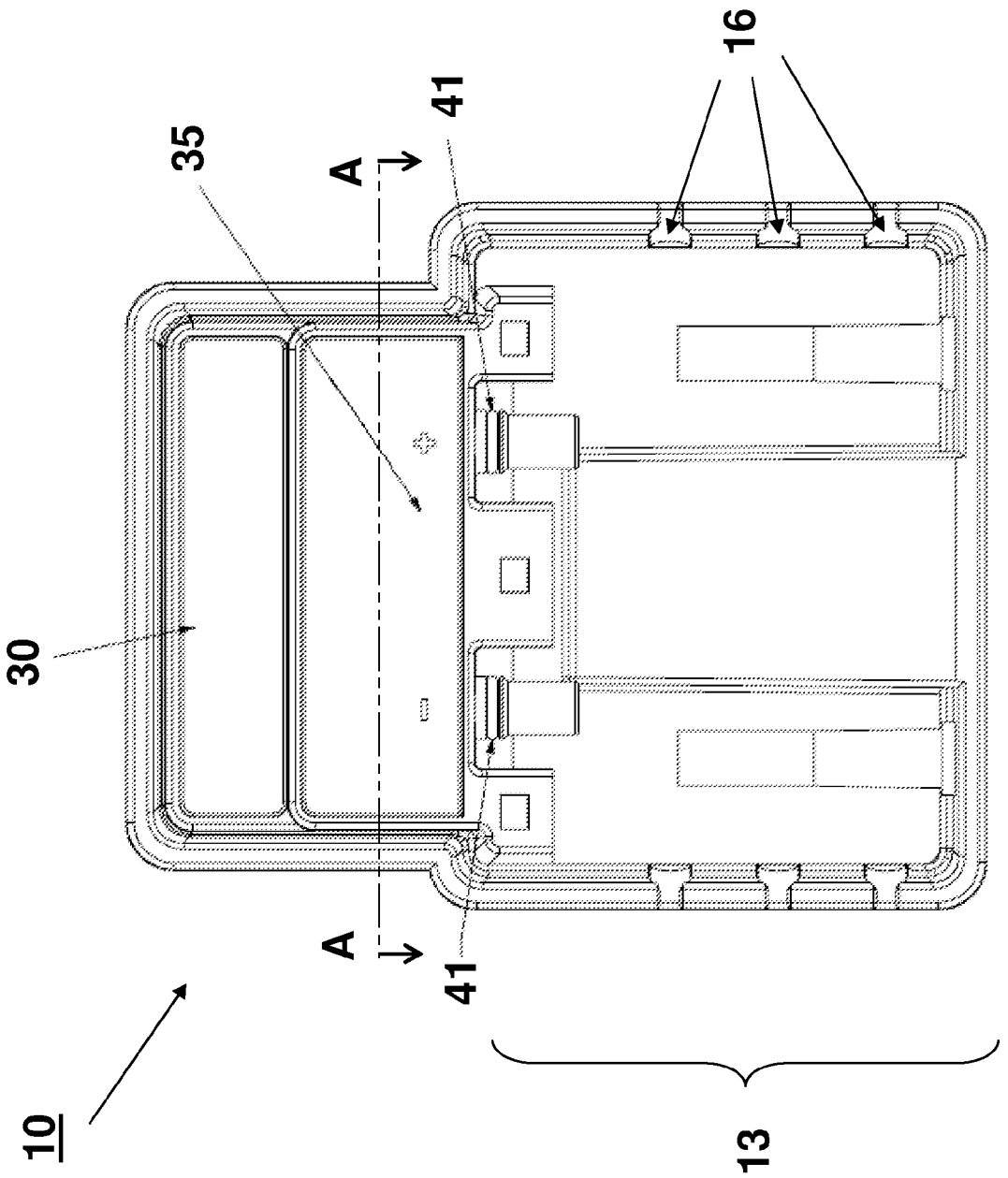


FIG. 3

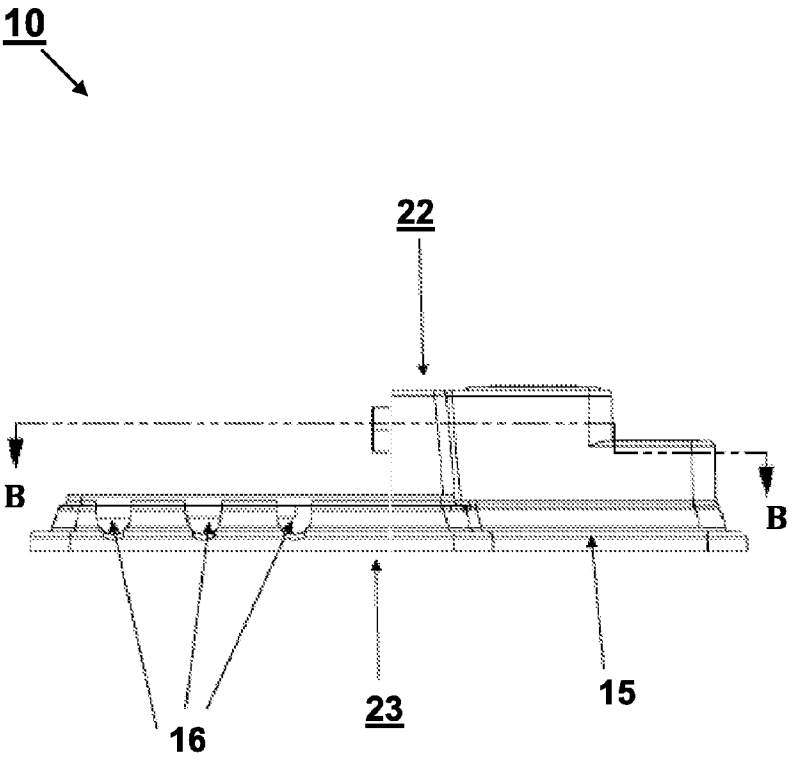


FIG. 4

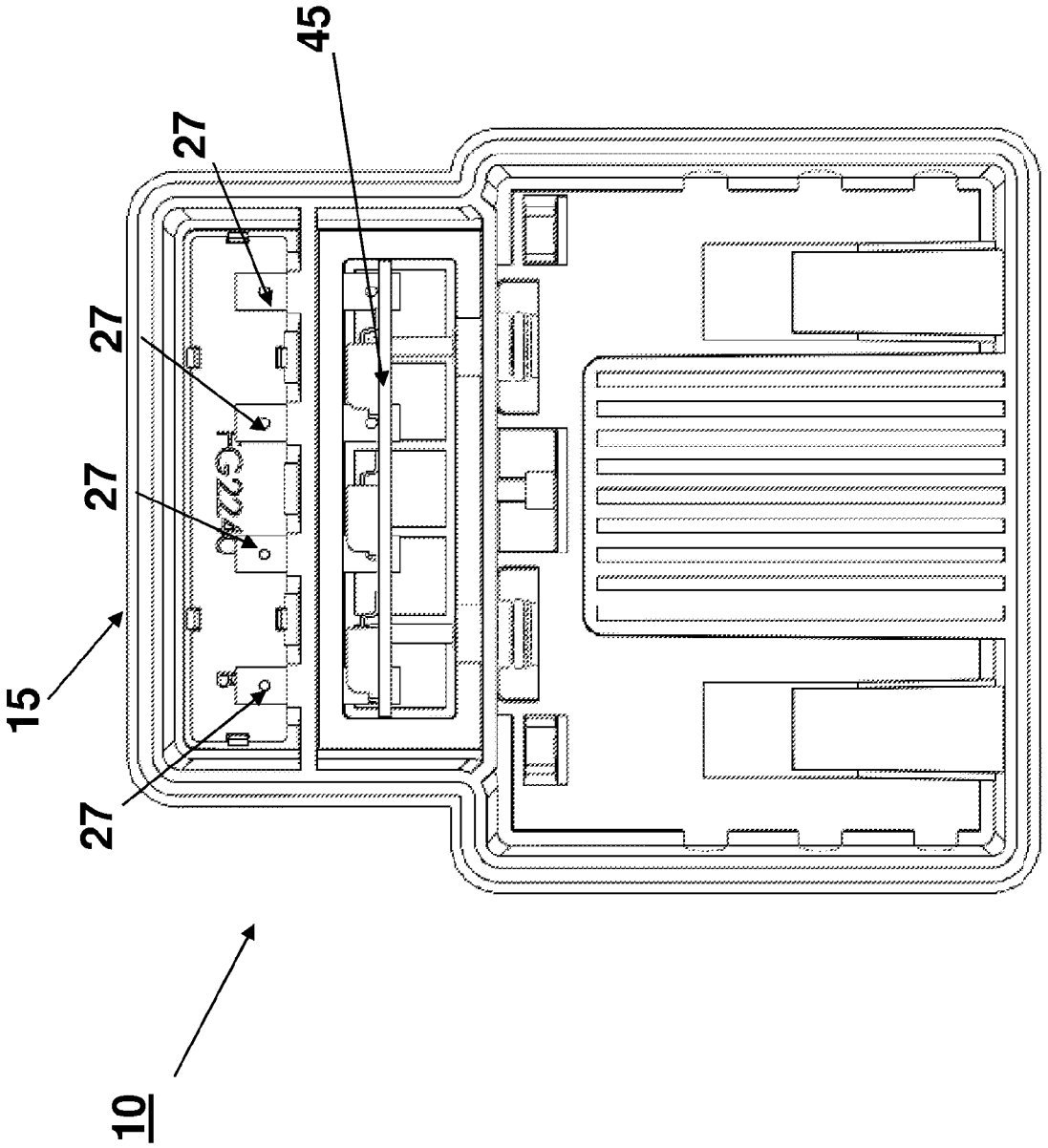


FIG. 5

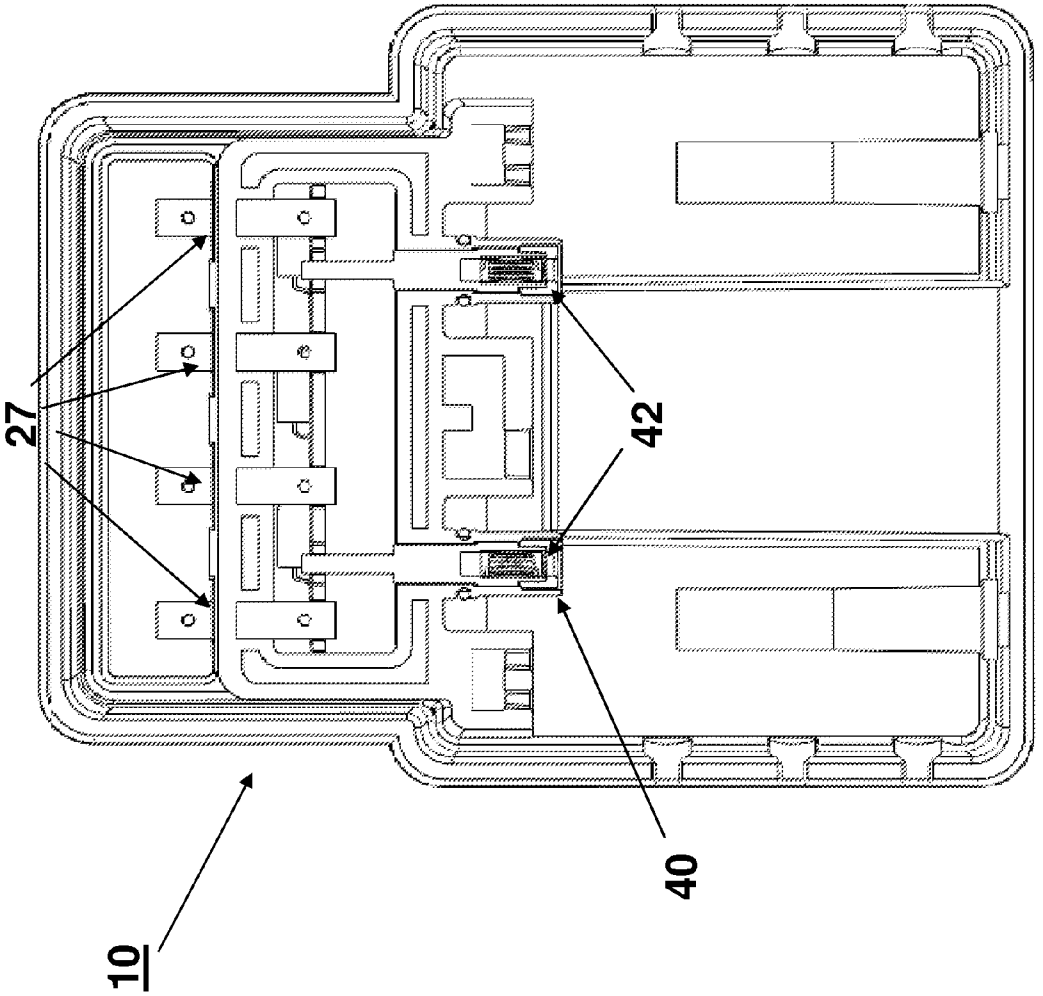


FIG. 6

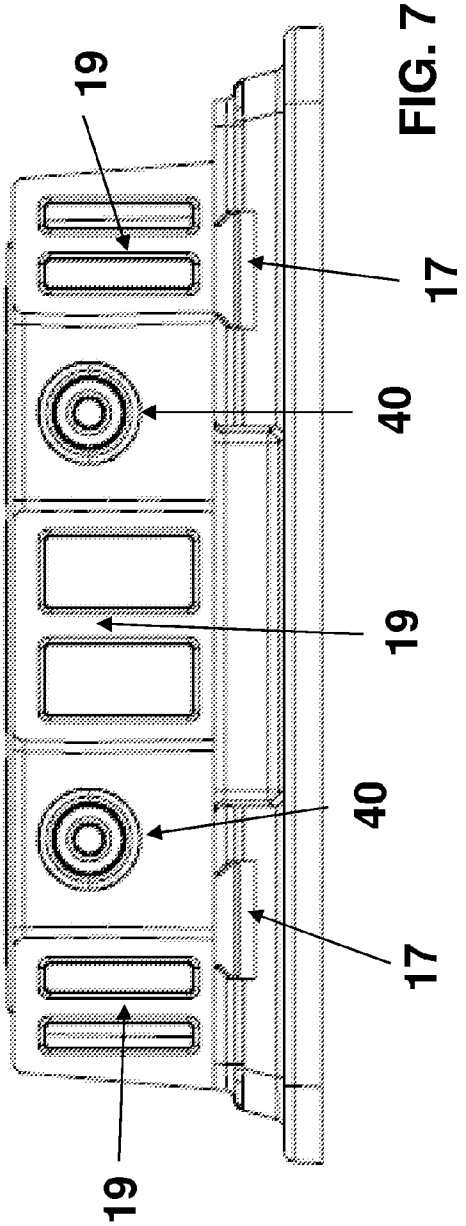


FIG. 7

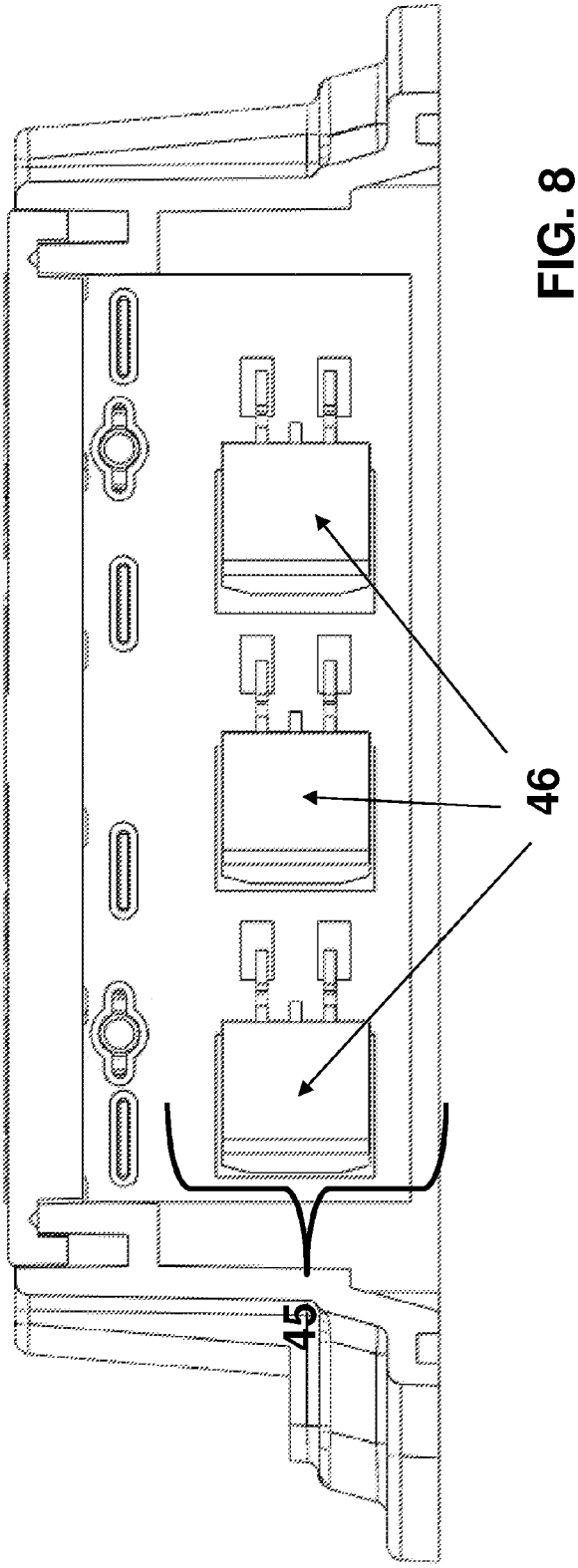


FIG. 8

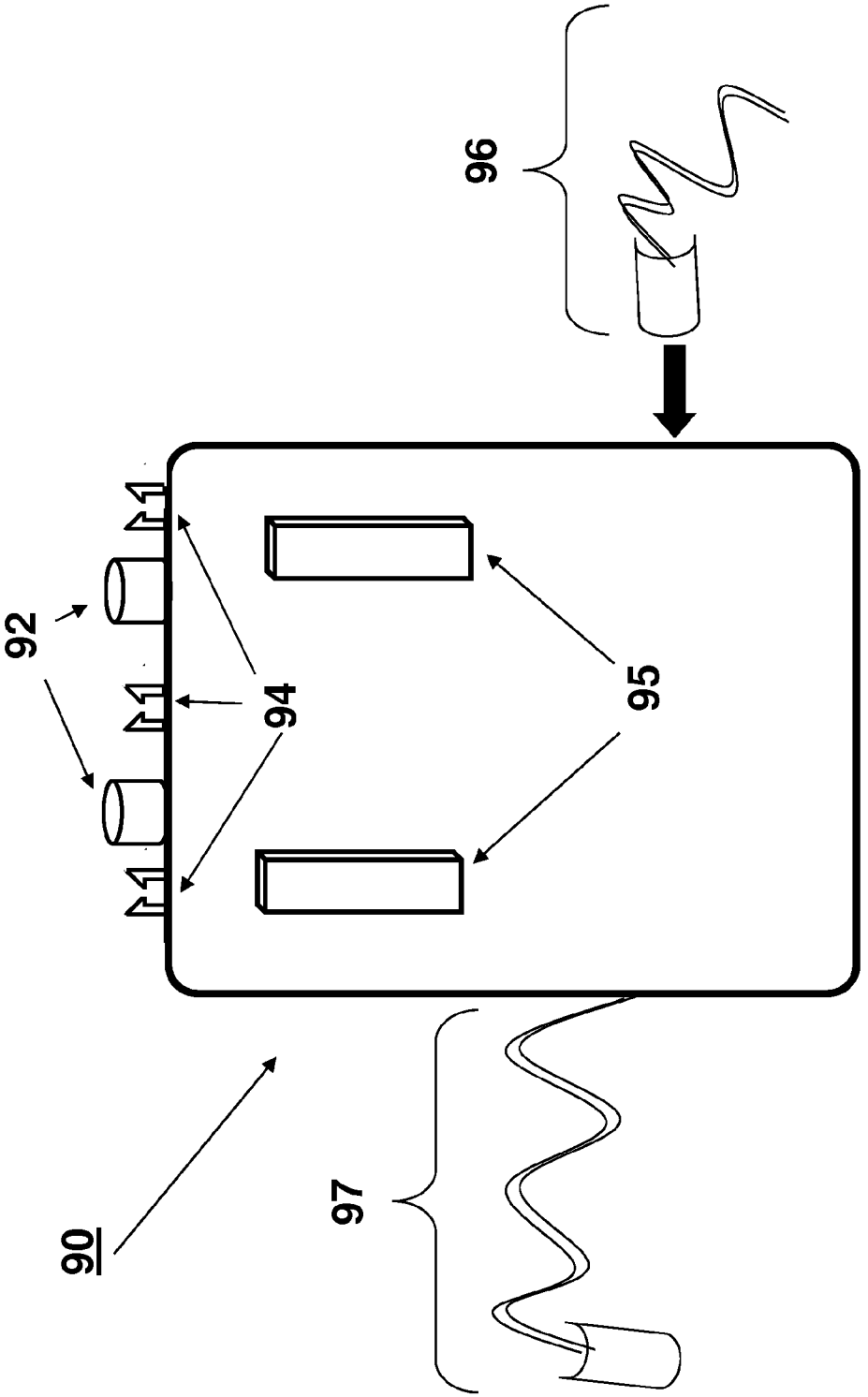


FIG. 9

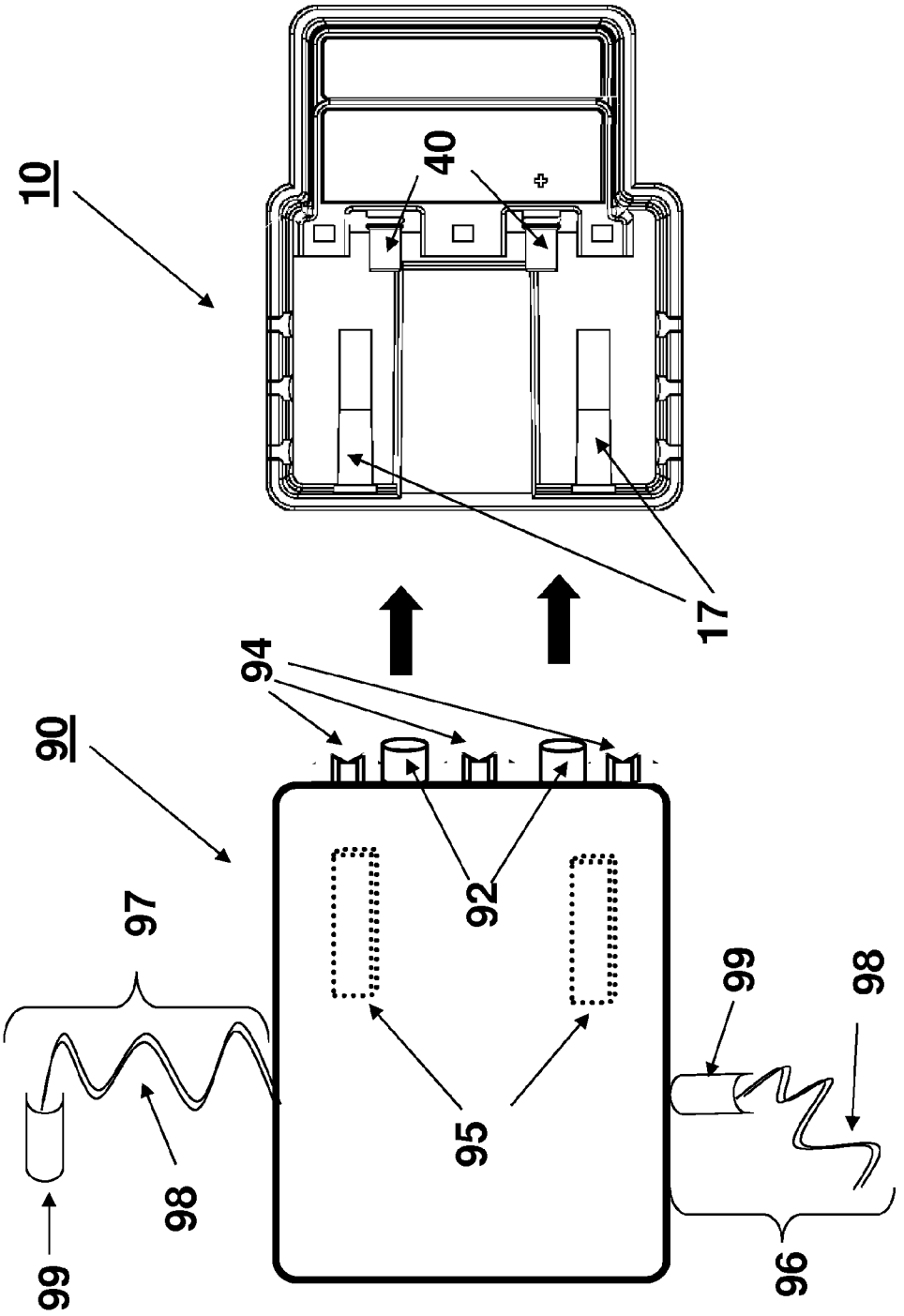


FIG. 10

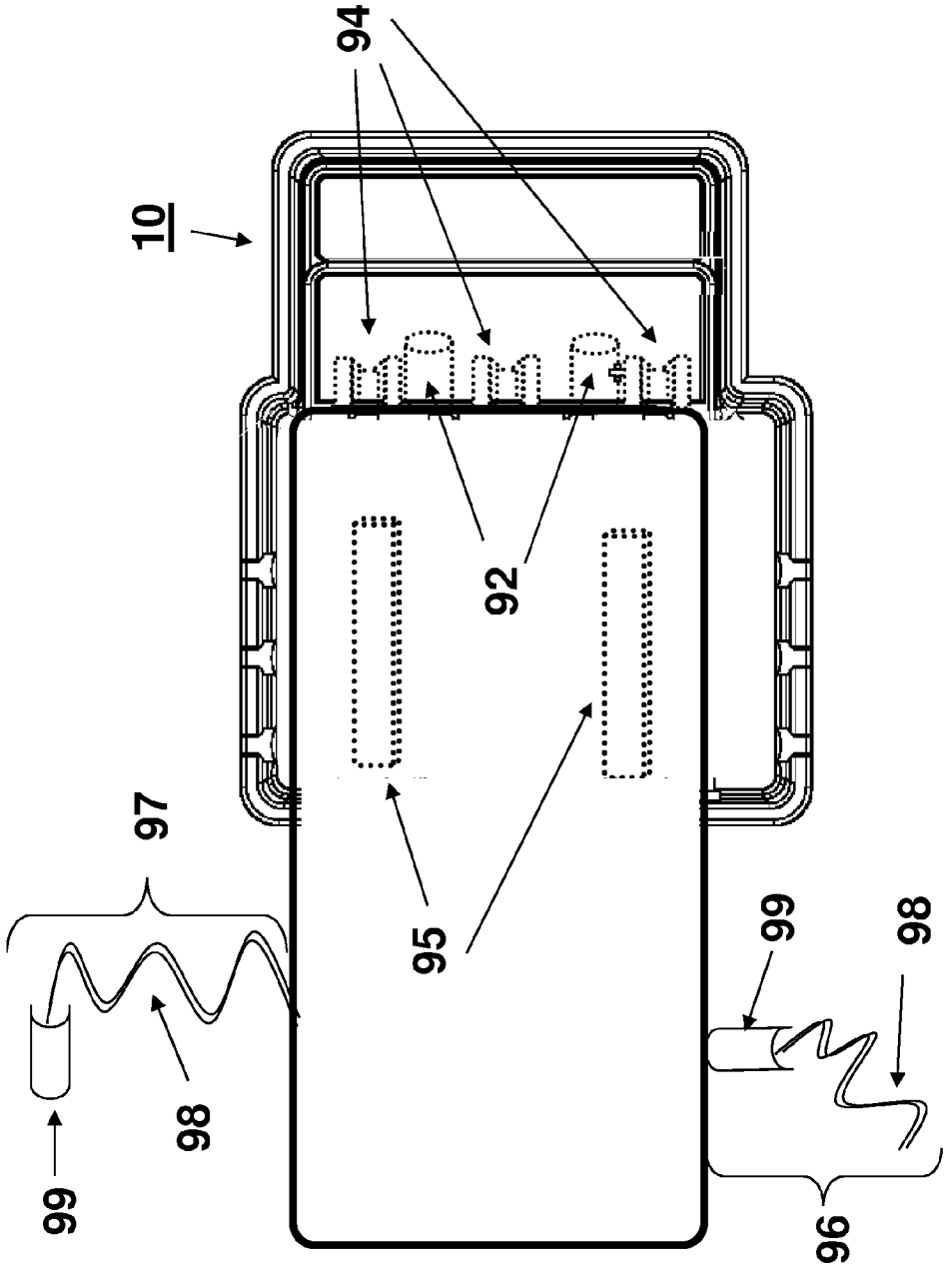


FIG. 11

# SOLAR PANEL JUNCTION BOX CAPABLE OF INTEGRATING WITH A VARIETY OF ACCESSORY MODULES, AND METHOD OF USE

## BACKGROUND

(1) Field

The present invention relates generally to electrical control systems for use in the solar industry and, more particularly, to junction boxes that facilitate "plug and play" functionality of solar energy accessory modules.

(2) Related Art

The invention discussed herein can be used with connectors disclosed in U.S. patent application Ser. No. 12/502,395, pertaining to "Low Leakage Electrical Joints and Wire Harnesses, and Method of Making the Same", that was filed on Jul. 14, 2009, and issued on Dec. 10, 2013 as U.S. Pat. No. 8,604,342, which is hereby incorporated by reference.

Due to technological advances, increased costs of non-renewable resources, and governmental incentives, solar energy can now be an economically advantageous endeavor. Accordingly, interest in solar energy has surged, and innovators are constantly developing new systems and components to optimize energy collection because variables such as inconsistent sunlight, breakage and malfunction outages in the solar field, and other fluctuations greatly affect the operating environment.

Considerable progress in optimization has been achieved by the development and refinement of various "accessory modules". In short, accessory modules are electrical components added onto conventional junction boxes to perform functions such as lessening peaks and valleys in energy generation, Maximum Power Point Tracking ("MPPT"), and to allow for direct AC conversion, including that achieved by micro-inverters. To achieve this, one junction box is outfitted with one accessory module, so the solar panels associated with that specific junction box are mediated by that specific accessory module.

While employing accessory modules is definitely an improvement over not using accessory modules, the one-module-per-group-of-panels arrangement does not permit optimization of the individual panels. This is undesirable because individual panels in a group may exist in different microenvironments. For example, one panel might be partially shaded while another panel is not. Accordingly, the optimization of individual panels would be most beneficial.

Optimizing individual panels, however, has been impractical or undesirable up until now. Specifically, coupling a panel to an accessory module requires affixing and hard wiring them together. As a result, when a panel or accessory module is damaged, destroyed, or otherwise quits working properly, the panel and accessory module are more-or-less permanently stuck together, and the entire assembly must be replaced. Alternatively, extensive time and labor is expended to separate the good hardware from the bad. Moreover, if it is desirable to swap out one accessory module for another (for example due to seasonal sunlight changes) one must swap the entire panel. This makes the optimization of individual panels impractical.

In view of the aforementioned limitations, it is desirable to have a device that allows an individual solar panel to be easily, expeditiously and reversibly outfitted with an accessory module.



Thus, there remains a need for a new and improved solar panel junction box capable of integrating with a variety of accessory modules, and the method of using this junction box.

## SUMMARY OF THE INVENTIONS

The present invention is directed to a universal junction box that is affixed to a solar panel and replaces the conventional junction box and downstream accessory module box. The junction box is configured to releaseably engage and disengage accessory modules which employ a standard engagement interface, thereby facilitating the replacement of one accessory module for another, for whatever reason, without having to replace or move the associated panel.

The junction box is electrically connected to the associated solar panel by the panel's electrical ribbon. Individual panels in a string are connected to each other in series only through wire connectors of the accessory modules. The furthest downstream accessory module is connected to a wire harness, which is connected to a central combiner box.

One aspect of the present inventions is to provide a device that can be substantially permanently affixed to a solar panel.

Another aspect is that this device releaseably engages and disengages an accessory module, thereby allowing accessory modules to be replaced and changed with minimal effort, time, danger or damage.

Another aspect is that this device is compatible with pre-existing accessory module interfaces.

Another aspect is that this device provides functionality beyond a simple docking station, for example by acting as a junction box.

Another aspect is that this device is configured to quickly and easily interconnect with other panels in a string.

Another aspect is that this device is compatible with pre-existing connectors, plugs, implements and accessories.

Another aspect is that this device can be used for retrofitting existing panels, or can be coupled with newly manufactured panels.

Another aspect is that this device is safe, cost effective, electrically efficient and not labor or capital intensive to manufacture, deliver or install.

These and other aspects of the present inventions will become apparent to those skilled in the art after a reading of the following description of the preferred embodiment when considered with the drawings.

## BRIEF DESCRIPTION OF THE DRAWING

FIG. **1** schematically represents a string of solar panel control systems;

FIG. **2** is a perspective view of a junction box;

FIG. **3** is a plan view of a junction box;

FIG. **4** is a side view of a junction box;

FIG. **5** is a plan view of a junction box with the lids removed to show structures beneath;

FIG. **6** is a cross-sectional plan view of a junction box, taken along B-B of FIG. **4**;

FIG. **7** is an end view of a junction box;

FIG. **8** is a cross-sectional side view of a junction box, taken along A-A of FIG. **3**;

FIG. **9** represents a bottom view of an accessory module schematically representing where an input could be plugged in;

FIG. **10** schematically represents how an accessory module is engaged with a junction box, with the raised strips of the accessory module shown in phantom; and

FIG. **11** schematically represents an accessory module engaged with a junction box, with certain accessory module structures shown in phantom.

## DESCRIPTION OF THE PREFERRED EMBODIMENTS

In the following description, like reference characters designate like or corresponding parts throughout the several views.

The following reference characters apply:

**10**—Junction box
**13**—Engagement platform
**15**—Base assembly
**16**—Air vent
**17**—Groove
**18**—Recess
**19**—Securing rib
**20**—Socket terminal assembly
**22**—Front surface
**23**—Back surface
**27**—Ribbon terminals
**28**—Ribbon
**30**—Removable lid
**35**—Diode cover
**40**—Female module plug
**41**—O-ring
**42**—Female Module terminal
**45**—Diode assembly module
**46**—Diode
**60**—Solar array
**65**—String
**70**—Solar panel
**80**—Wire harness
**90**—Accessory Module
**92**—Male module plug
**94**—Clipping assembly
**95**—Alignment ribs
**96**—Input
**97**—Output
**98**—Wire connector
**99**—Wire plug
**100**—Solar panel control system

Referring now to the drawings, it will be understood that the illustrations describe a preferred embodiment of the invention, but are not intended to limit the inventions thereto.

An overview of solar array **60** is schematically depicted in FIG. **1**, which preferably includes between **6** and **8** solar panels **70** in string **65**, each solar panel **70** including one junction box **10**, with each junction box **10** engaged to and in communication with one accessory module **90**. The resulting assembly of accessory module **90**/junction box/solar panel **70** is solar panel control system **100**.

Each accessory module **90** is electrically connected to another accessory module **90**. Solar panels **70** are those conventionally used in small- and industrial scale solar energy systems, with an example of a suitable panel being E237 from SunPower Corporation of San Jose, Calif.

The most downstream junction box **10** (bottom left) in string **65** is connected by wire harness **80** to "COMBINER". Wire harness **80** is preferably the device disclosed in U.S. patent application Ser. No. 12/502,395, filed on Jul. 14, 2009, issued on Dec. 10, 2013 as 8,604,342, and which is incorporated herein. FIG. **1** depicts wire harness **80** accommodating 6 strings **65** (one string **65** plus 5 "bolts" representing other strings) but between 3 and **64** strings can be accommodated by wire harness **80**. All strings **65** (and associated components such as solar panels **70**) in one wire harness **80** collectively form solar array **60**.

Downstream from COMBINER BOX is FUSE BOX, INVERTER and SWITCH YARD. As would be understood by one of ordinary skill, the combiner would actually accommodate multiple wire harnesses **80**, the fuse box would actually accommodate multiple combiners, the inverter would actually accommodate multiple fuse boxes, and the switch yard would actually accommodate multiple inverters. However, redundant assemblies have been omitted for simplicity. The person of ordinary skill would also understand that the depiction merely represents some major components in one possible system.

One junction box **10** is affixed to each solar panel **70**, preferably by an adhesive such as PV 804 from Dow Corning of Midland, Mich., although other adhesives, or standard methods of attaching would be suitable. Back surface **23** (shown in FIG. **4**) is adhered to solar panel **70**. While FIG. **1** schematically depicts junction boxes **10** on the side of solar panels **70**, it is possible to affix junction box **10** in other locations, preferably on solar panel **70** itself, so long as front surface **22** (FIG. **4**) is accessible to permit engagement of accessory modules **90**, and to permit connection of junction box **10** to solar panel **70** by ribbon **28**. FIG. **1** depicts six solar panels **70** of string **65** in series, but it would also be possible to orient them in parallel.

Referring now to FIG. **2**, junction box **10** is constructed on base assembly **15** and can be conceptualized as having the electrical "brains" in the upper half, and the physical "module interface" in the lower half. Externally on the upper half is removable lid **30** which, as the name implies, is removable. Externally below removable lid **30** is diode cover **35**, which is not removable. Removable lid **30** and diode cover **35** protect the electrical connections underneath, which are integral to base assembly **15**. As used herein, "integral electrical connections" and like terms refer to the orientation of electrical components within base assembly **15** wherein base assembly **15** physically receives and secures the electrical components, versus providing a generic housing wherein electrical components and fasteners are assembled and secured therein.

More specifically, the integral electrical connections beneath removable lid **30** are ribbon terminals **27** (FIGS. **5** and **6**) which attach to ribbons **28** of solar panel **70**, as shown in FIG. **1**. The ribbons in the solar panel are an electromechanical means of providing power from the solar cells to the junction box ribbon terminals. Ribbon terminals **27** provide the electrical path from panel **70** into junction box **10**.

The integral electrical connections beneath diode cover **35** include diode printed circuit board assembly module **45** (FIGS. **5** and **8**), including diodes **46** (FIG. **8**). The function of diode assembly module **45** provides the electrical connection between ribbon terminals **27** and output terminal **20** while providing the bypass and reverse leakage functionality required to protect the solar panel.

As best shown in FIG. **5**, socket assembly **20** is electrically connected to diode assembly module **45**. Socket assembly **20** includes O-ring **41** (FIG. **3**) and male module plug **40**, neither of which are concealed by diode cover **35**, as shown in FIGS. **2** and **3**. As shown in cross section in FIG. **6**, module terminal **42** is within male module plug **40** Male module plug **40** connects with female module plug **92** of accessory module **90**, as shown in FIG. **10**.

Accessory module **90** can be a variety of types used in the solar energy industry. An example of a power electronics type accessory module is a microinverter from Solantro Semiconductor of Ottawa, Ontario, Canada. An example of a supervi-

sory or control type accessory module is an MPPT SPM1258A-S from Solar Power Technologies of Austin, Texas and/or a boost controller STG-MLM2-4 from Tigo Energy of Los Gatos, California. An example of a standard accessory module is STG-MLM-2 from Shoals Technologies Group of Portland, Tenn., which essentially acts as a place holder but does not perform an accessory module function. This invention contemplates using modules which are not yet designed or known, for example arc fault detection, as well as those in development and commercially available. However, in order to properly interface with junction box **10**, accessory module **90** would have the universal orientation shown in FIGS. **9** and **10**, including three clipping assemblies **94**, and two female module plugs **92**. This unique interface between the junction box and accessory module allows interchangeability of a limitless variety of modules.

Returning to junction box **10** (FIGS. **2** and **7**), on either side of each male module plug **40** is securing rib **19** which mates with clipping assembly **94** of module **90** (FIG. **9**) when module **90** is slid into position on junction box **10**, as shown best in FIG. **10**. While clipping assembly **94** and securing rib **19** are preferred, other mechanisms for fastening module **90** into position on junction box **10** are also possible.

Clipping assembly **94** and securing rib **19** assist in holding module **90** and junction box **10** together when engaged. In addition, other structures are involved with alignment and securing. As shown in FIG. **2**, engagement platform **13** defines grooves **17** that receive corresponding alignment ribs **95** on module **90**, shown in FIG. **9**. As used herein, "engagement platform" shall refer to the general region of junction box **10** that includes grooves **17**, recess **18**, and surrounding (unnumbered) planar surface. In operation, a user aligns alignment ribs **95** of accessory module **90** with grooves **17** of junction box **10**, and slides accessory module **90** until female module plug **92** engages with male module plug **40**. The pre-engagement alignment is represented in FIG. **10** and engaged orientation is depicted in FIG. **11**, with certain structures shown in phantom. Although not obvious from the drawings, grooves **17** are tapered going inward, thereby further securing junction box **10** and accessory module **90** together. It should be noted that junction box **10** and accessory module **90**, when engaged, are releaseably engaged. As used herein "releaseably engaged" and similar terms refer to an engagement between parts wherein a user can apply reasonable physical force, with or without the necessary use of tools, to engage the parts, and reasonable physical force, with the use of tools, to disengage the parts, with such engagement and disengagement not likely to damage the parts, and with unintentional engagement and disengagement unlikely to occur in regular use. Recess **18** provides additional air circulation for engaged module **90** in order to reduce hot spots on the solar panel.

FIG. **11** shows an accessory module engaged with junction box **10**. In this orientation, input **96**, with wire connector **98** and wire plug **99**, is shown on the bottom, and output **97**, with wire connector **98** and wire plug **99**, is shown on the top. However, it should be noted that accessory modules **90** come in a variety of different sizes, and have different functions, and the specific location of input **96** and output **97** is unimportant so long as it can properly interface with junction box **10**. Preferably wire plug **99** will be at the distal (relative to accessory module **90**) end of wire connector **98** for output **97**, and proximal end of wire connector **98** for input **96**. In this orientation the proximal end of wire connector **98** is "hard wired" into accessory module **90** for output **97**. Alternatively, it is possible to employ wire plug **99** and wire connectors **98** at both ends of wire connector **96**. Also, it is possible to employ a wire with a wire plug **99** or wire connector **98** and a bulkhead connector molded into the accessory module. Also, it is possible to have the input **96** and output **97** both be molded in connectors allowing the customer to control the wire length. Preferably wire plug **99** is MC4 from Multi-Contact of Windsor, Calif.

In use, one could either purchase solar panel **70** with junction box **10** already mounted, or retrofit existing solar panel **70** by affixing junction box **10**. With junction box **10** in position, module **90** is engaged with engagement platform of junction box **10**. The same is performed for other solar panels **70** in string **65**. The specific modules **90** selected for each panel **70** depends on the particular circumstances. For example, a panel which is often in the shade might benefit from a boost controller, part number STG-MLM2-4,from Tigo Energy, while a panel that requires monitoring or switching capability might benefit from a MPPT accessory module, part number SPM1258A-S from Solar Power Technologies. Furthermore, a panel that requires AC output might benefit from a microinverter accessory module from Solantro Semiconductor. The resulting module type, or combination of module types, should be selected to optimize the overall productivity of the system with respect to energy generation, cost savings, safety, and so forth. Solar panels **70** are grouped into string **65** by connecting output **97** of a downstream accessory module **90** to input **96** of immediately upstream accessory module. Strings are connected at most downstream point to wire harness **80**. All the strings connected to one wire harness **80** are collectively solar array **60**.

Accessory modules **90** are interchangeable by disengaging accessory module **90** from junction box **10** (which is affixed to solar panel **70**), and engaging a different accessory module. As used herein "interchangeable solar panel control system" refers to solar panel control system **100** with this functionality.

Certain modifications and improvements will occur to those skilled in the art upon a reading of the foregoing description. By way of example, if one accessory module would suffice for all panels in a string, all panels except one could employ "standard accessory modules". It should be understood that all such modifications and improvements have been deleted herein for the sake of conciseness and readability but are properly within the scope of the following claims.

I claim:

**1**. A solar panel junction box with integral electrical connections, said junction box comprising:

a base assembly with a front surface and a back surface, said front surface defining an engagement platform including at least one groove for slidably receiving a releasable accessory module, and said front surface including at least one securing rib for fixing said accessory module;

at least one module plug in close proximity to said base assembly; and

at least one ribbon terminal in electrical communication with said module plug, said ribbon terminal capable of being electrically coupled with a solar panel, wherein an electrical connection is formed between said accessory module and said junction box when said engagement platform releasably receives said accessory module.

**2**. The junction box of claim **1** wherein said accessory module is selected from a power electronics type, a supervisory/control type, and a standard accessory module.

**3**. The junction box of claim **1** further comprising a diode assembly module electrically connecting said ribbon terminal to said module plug.

**4**. The junction box of claim **1** wherein said back surface further comprises an adhesive.

**5**. The junction box of claim **1** wherein said module plug is a male module plug.

**6**. The junction box of claim **1** wherein said at least one groove is tapered.

* * * * *