[redacted]

UNITED STATES INTERNATIONAL TRADE COMMISSION
WASHINGTON, D.C.

Before the Honorable Monica Bhattacharyya
Administrative Law Judge

In the Matter of **CERTAIN PHOTOVOLTAIC CONNECTORS AND COMPONENTS THEREOF**	**Investigation No. 337-TA-1365**

COMPLAINANT SHOALS TECHNOLOGIES GROUP, LLC'S
REPLY POST-HEARING BRIEF

Shoals Technologies Group, LLC
EXHIBIT 2017
Voltage, LLC v.
Shoals Technologies Group, LLC
PGR2024-00022

[redacted]

TABLE OF CONTENTS

I. INTRODUCTION 1

II. JURISDICTION AND IMPORTATION 2

III. CLAIM CONSTRUCTION 3

A. The *Markman* Order correctly interprets the "aperture" terms. 4

1. The specification and prosecution history require a distinction between drop lines and wires. 5

a. The patent does not use "'wire 12' or 'drop wire 12' or 'drop cable 12.'" 5

b. Dr. Cameron confuses the grammatical distinction between "drop" and "drop line" with a structural one. 6

c. The patent counts drop lines by connections, not wires. 7

d. The specification and prosecution history teach two drop lines made of a single wire. 7

e. Conversely, the '153 patent does not disclose an embodiment with two drop lines made of a single wire. 9

2. The claim language ties the second and third apertures to drop lines, not wires. 12

3. The *Markman* Order's construction does not lead to indefiniteness. 13

a. "aperture" is sufficiently definite. 14

b. "second aperture" and "third aperture" are sufficiently definite. . 15

B. Other new issues raised by Voltage and Staff will be addressed in context. 18

IV. INFRINGEMENT 18

A. Voltage and Staff concede the sufficiency of Shoals' representative infringement analysis. 18

B. Nothing in the briefing from Voltage and Staff undermines Shoals' preponderant evidence that LYNX infringes. 22

1. Mr. Brooks correctly applied the *Markman* Order's construction of "aperture." 22

2. Reading the *Markman* Order and applying its constructions did not change Mr. Brooks' opinions, as first given in his expert report and deposition, regarding the second and third apertures, as claimed by the '153 patent. 23

[redacted]

3. The evidence does not support finding that two separate drop lines connected to two separate sets of solar panels are really just one single drop line if formed of a single wire. 24

C. Voltage did not prove that AD LYNX satisfies the *Milk* factors. 28

D. AD LYNX infringes, in any event. 33

V. TECHNICAL DOMESTIC INDUSTRY 35

A. Shoals' technical DI showing is fully representative. 35

B. Shoals' BLA practices claims 1 and 21. 39

VI. VALIDITY 39

A. Dr. Kenny's testimony should be disregarded because the *Markman* Order gives a correct definition of skill in the art, which Dr. Kenny does not satisfy. 39

1. Voltage's definition of a POSA is inadequate. 40

2. Dr. Kenny does not meet the *Markman* Order's POSA standard. 42

3. Voltage's argument that Mr. Weiner is not a POSA is meritless. 45

B. The '153 patent is not obvious in view of Yamawaki and Shao. 48

1. Voltage does not establish Shao as analogous art. 48

2. Voltage does not show a motivation to combine Yamawaki and Shao, with a reasonable expectation of success. 50

3. Voltage fundamentally misreads Yamawaki. 52

a. Yamawaki teaches a wire harness collecting outputs from solar panels, not solar arrays. 52

b. Yamawaki does not teach a single trunk cable extending completely through the branch junction. 55

C. Shoals' proof of objective indicia of nonobviousness stands unrebutted. 56

D. Voltage has not shown indefiniteness. 57

VII. ECONOMIC DOMESTIC INDUSTRY 57

A. Shoals' domestic industry investments relate to patent-practicing products. 58

B. Shoals established a domestic industry as of and continuing into 2023. 62

C. Shoals' investments in plant and equipment are reliable and cognizable. 63

1. Shoals properly allocated square footage for "warehousing." 64

2. Shoals properly included Plant 1 acquisition costs. 66

3. Shoals properly allocated facility expenses and factory supplies. 66

D. Shoals properly allocated its domestic investments in labor and capital. 67

[redacted]

1. Shoals' research and development investments are sufficiently reliable 67

2. Shoals' SG&A expenses are qualifying domestic investments. 69

3. Shoals' direct labor investments are properly included and reliable. 70

E. Shoals' investments are quantitatively and qualitatively significant. 71

1. Shoals has shown the significance of its domestic industry investments in the context of its operations. 71

2. Voltage's and Staff's value-add arguments are inapposite. 72

3. Shoals properly established quantitative significance based on its manufacturing ratio. 74

4. Shoals properly established quantitative significance based on revenues. 75

VIII. REMEDY 75

A. An exclusion order should issue, with no carveout. 75

B. Voltage should be required to post 100 percent bond 78

IX. CONCLUSION 80

[redacted]

TABLE OF AUTHORITIES

Cases

Ariosa Diagnostics v. Verinata Health, Inc.,
805 F.3d 1359 (Fed. Cir. 2015).....52

Armament Sys. & Procs., Inc. v. Monadnock Lifetime Prods., Inc.,
168 F.3d 1319, 1998 WL 537746 (Fed. Cir. 1998) (unpublished).....41

Auto Lamps II,
Inv. No. 337-TA-1292, Comm'n Op., 2024 WL 1298904 (Mar. 22, 2024).....60

Biogen, Inc. v. Berlex Labs., Inc.,
318 F.3d 1132 (Fed. Cir. 2003).....15

Brand Mgmt., Inc. v. Menard, Inc.,
135 F.3d 776, 1998 WL 15241 (Fed. Cir. 1998) (unpublished).....42

Certain Apparatus & Methods of Opening Containers,
Inv. No. 337-TA-1255, Ord. No. 11 (ID), 2021 WL 6194978 (Dec. 20, 2021).....75

Certain Artificial Eyelash Extension Sys., Prod., & Components Thereof,
Inv. No. 337-TA-1226, Comm'n Op., 2022 WL 15498309 (Oct. 24, 2022).....65

Certain Automated Put Walls & Automated Storage & Retrieval Sys., Associated Vehicles, Associated Control Software, & Component Parts Thereof,
Inv. No. 337-TA-1293, Comm'n Op., 2023 WL 5426449 (Aug. 17, 2023).....63, 70, 72

Certain Bone Cements, Components Thereof & Prod. Containing the Same,
Inv. No. 337-TA-1153, Comm'n Op., 2021 WL 287860 (Jan. 25, 2021)
.....29, 64, 65, 70

Certain Computer Forensic Devices & Prod. Containing the Same,
Inv. No. 337-TA-799, ID, 2012 WL 5942392 (Oct. 26, 2012).....60

Certain Computer Network Sec. Equip. & Sys., Related Software, Components Thereof, & Prod. Containing Same,
Inv. No. 337-TA-1314, ID, 2023 WL 574421 (Aug. 8, 2023).....64

Certain Dimmable Compact Fluorescent Lamps & Prod. Containing Same,
Inv. No. 337-TA-830, ID, 2013 WL 1491916 (Feb. 27, 2013).....60

Certain Elec.Connectors & Cages, Components Therof, & Prod. Containing the Same,
Inv. No. 337-TA-1241, FID, 2022 WL 1124999 (Mar. 11, 2022).....29, 60

[redacted]

Certain Elec. Devices with Image Processing Sys.,
Inv. No. 337-TA-724, Order No. 29, ID, 2011 WL 1336531 (Mar. 11, 2011) 30, 67

Certain Electrical Devices, Including Stream Players, Televisions, Set Top boxes, Remote Controllers, & Components Thereof,
Inv. No. 337-TA-1200, ID, 2021 WL 3185836 (July 9, 2021).....30, 34

Certain Encapsulated Integrated Cir. Devices & Prod. Containing Same,
No. 337-TA-501, Comm'n Op., 2014 WL 12935964 (Apr. 28, 2014) 66, 67

Certain Flocked Swabs, Prod. Containing Flocked Swabs, & Methods of Using Same,
Inv. No. 337-TA-1279, FID, 2022 WL 18141793 (Oct. 28, 2022) 29

Certain Foldable Reusable Drinking Straws & Components & Accessories Thereof,
Inv. No. 337-TA-1183, Ord. No. 13 (ID), 2020 WL 5836575 (July 17, 2020).....74

Certain Foldable Reusable Drinking Straws and Components and Accessories Thereof,
Ord. No. 18, 2020 WL 6156601 (Sept. 22, 2020) 74

Certain Gas Spring Nailer Prod. & Components Thereof,
Inv. No. 337-TA-1082, USITC Pub. No. 5075.....36

Certain Human Milk Oligosaccharides and Methods of Producing the Same,
Inv. No. 337-TA-1120, Comm'n Op., at 18, 2020 WL 3073788 (June 8, 2020).....1, 28, 33

Certain Integrated Cir. Telecomm. Chips & Prod. Containing Same Including Dialing Apparatus,
Inv. No. 337-TA-337, USITC Pub. No. 2670, 1993 WL 13033517 (June 22, 1993) 30, 59

Certain Integrated Cirs. & Prod. Containing the Same,
Inv. No. 337-TA-1148, Ord. No. 38, 2019 WL 7288999 (Nov. 4, 2019) 66, 70

Certain Kinesiotherapy Devices & Components Thereof,
Inv. No. 337-TA-823, Comm'n Op., 2013 WL 12447252 (July 12, 2013).....70

Certain LED Lighting Devices,
Inv. No. 337-TA-1081, ID, 2018 WL 7350925 (Dec. 19, 2018)..... *passim*

Certain Light-Emitting Diode Products, Fixtures, and Components Thereof,
337-TA-1213, Comm'n Op., 2022 WL 168302 (Jan. 14, 2022) 77

Certain Luxury Vinyl Tile & Components Thereof,
Inv. No. 337-TA-1155, Comm'n Op., USITC Pub. No. 5288, 2022 WL 20402980 (Mar. 1, 2022) 73

[redacted]

Certain Male Prophylactic Devices,
Inv. No. 337-TA-546, Comm'n Op., 2007 WL 9772268 (Aug. 1, 2007) 67

Certain Marine Air Conditioning Sys., Components Thereof, & Prod. Containing the Same,
Inv. No. 337-TA-1346, ID, 2023 WL 8664238 (Dec. 8, 2023).....76

Certain Marine Sonar Imagin Devices, Including Downscan & Sidescan Devices, Prod. Containing the Same & Components Thereof,
No. 337-TA-921, Comm'n Op., 2016 WL 10987364 (Jan. 6, 2016) 59, 60

Certain Microlithographic Machines and Components Thereof,
Inv. No. 337-TA-468, ID, 2023 WL 1831891 (Jan. 29, 2003).....72, 77

Certain Mobile Devices with Multifunction Emulators,
Inv. No. 337-TA-1170 (Mar. 16, 2021).....29, 30

Certain Mobile Tels., Tablet Computers with Cellular Connectivity, & Smart Watches with Cellular Connectivity, Components Thereof, & Prod. Containing Same,
Inv. No. 337-TA-1299, Ord. No. 22, 2022 WL 17688524 (Nov. 15, 2022) 71

Certain Movable Barrier Operator Sys. & Components Thereof,
Inv. No. 337-TA-1209, Ord. No. 12 (ID), 2021 WL 2155165 (Apr. 26, 2021) 71

Certain Power Semiconductors, & Mobile Devices & Computers Containing Same,
Inv. No. 337-TA-1308, FID, 2023 WL 4045379 (May 18, 2023).....69

Certain Raised Garden Beds & Components Thereof,
Inv. No. 337-TA-1334, Comm'n Op., 2024 WL 1434222 (Apr. 1, 2024) 68

Certain Replacement Auto. Lamps II,
Inv. No. 337-TA-1292, ID, 2023 WL 1794924 (Jan. 24, 2023).....37, 60

Certain Semiconductor Devices & Consumer Audiovisual Prod. Containing the Same,
Inv. No. 337-TA-1047, FID, 2018 WL 3062372 (May 11, 2018).....69

Certain Solid State Storage Drives, Stacked Elecs. Components, & Prod. Containing Same,
Inv. No. 337-TA-1097, Comm'n Op., 2018 WL 4300500 (June 29, 2018).....64, 68

Certain Stringed Musical Instruments & Components Thereof,
Inv. No. 337-TA-586, Comm'n Op., 2008 WL 2139143 (May 16, 2008).....61, 68

Certain Subsea Telecommunication Systems and Components Thereof,
No. 337-TA-1098, USITC Pub. No. 5022, 2020 WL 9312366 (Feb. 1, 2020).....60

[redacted]

Certain Sucralose, Sweeteners Containing Sucralose, and Related Intermediate Compounds Thereof,
Inv. No. 337-TA-604, Comm'n Op., 2009 WL 1178470 (Apr. 28, 2009) 80

Certain Table Saws Incorporating Active Injury Mitigation Tech. and Components Thereof,
Inv. No. 337-TA-965, Order No. 10, ID at 17 (Apr. 27, 2016) 75

Certain Video Displays, Components Thereof, and Prods. Containing the Same,
Inv. No. 337-TA-687, Ord. No. 20 (ID), 2010 WL 2306671 (May 20, 2010) 70

Certain Wet Dry Surface Cleaning Devices,
Inv. No. 337-TA-1304, ID, 2023 WL 2824398 (Mar. 24, 2023).....65, 66, 71

In re Clay,
966 F.2d 656 (Fed. Cir. 1992).....48, 50, 51

CVI/Beta Ventures, Inc. v. Tura LP,
112 F.3d 1146 (Fed. Cir. 1997).....9

Decisioning.com, Inc. v. Federated Dept. Stores, Inc.,
527 F.3d 1300 (Fed. Cir. 2008).....11

Energizer Holdings, Inc. v. Int'l Trade Comm'n,
435 F.3d 1366 (Fed. Cir. 2006).....15, 16

Enzo Biochem, Inc. v. Gen-Probe Inc.,
323 F.3d 956 (Fed. Cir. 2002).....14

Ferguson Beauregard/Logic Controls v. Mega Sys., LLC,
350 F.3d 1327, 1338 (Fed. Cir. 2003).....43

Grunenthal GMBH v. Alkem Labs. Ltd.,
919 F.3d 1333 (Fed. Cir. 2019).....51

Guangdong Alison Hi-Tech Co. v. Int'l Trade Comm'n,
936 F.3d 1353 (Fed. Cir. 2019).....48

Hyundai Elecs. Indus. Co. v. Int'l Trade Comm'n,
899 F.2d 1204 (Fed. Cir. 1990).....78

Kyocera Senco Indus. Tools Inc. v. Int'l Trade Comm'n,
22 F.4th 1369 (Fed. Cir. 2022) 28, 39, 43

Mintz v. Dietz & Watson, Inc.,
679 F.3d 1372 (Fed. Cir. 2012).....40, 41

[redacted]

Molins PLC v. Textron, Inc.,
48 F.3d 1172 (Fed. Cir. 1995).....14

Monarch Knitting Mach. Corp. v. Sulzer Morat, GmbH,
139 F.3d 877 (Fed. Cir. 1998).....42

Nature Simulation Sys. Inc. v. Autodesk, Inc.,
50 F.4th 1358 (Fed. Cir. 2022) 16

Nautilus, Inc. v. Biosig Instruments, Inc.,
572 U.S. 898 (2014).....18

Network Com., Inc. v. Microsoft Corp.,
422 F.3d 1353 (Fed. Cir. 2005).....15

Nevro Corp. v. Boston Sci. Corp.,
955 F.3d 35 (Fed. Cir. 2020).....15

Phillips v. AWH Corp.,
415 F.3d 1303 (Fed. Cir. 2005).....11, 43

Schaper Mfg. Co. v. Int'l Trade Comm'n,
717 F.2d 1368 (Fed. Cir. 1983).....70

Spansion, Inc. v. Int'l Trade Comm'n,
629 F.3d 1331 (Fed. Cir. 2010).....38

Sundance, Inc. v. DeMonte Fabricating Ltd.,
550 F.3d 1356 (Fed. Cir. 2008).....39, 43

Vitronics Corp. v. Conceptronic, Inc.,
90 F.3d 1576 (Fed. Cir. 1996).....5, 11, 15

Vizio, Inc. v. Int'l Trade Comm'n,
605 F.3d 1330 (Fed. Cir. 2010).....52, 55

Statutes

19 U.S.C. § 1337.....2, 73, 76, 79

35 U.S.C. § 112.....14

35 U.S.C. § 282.....48

Other Authorities

88 Fed. Reg. 37905-06.....77

[redacted]

Black's Law Dictionary (11th ed. 2019).....61

Manual of Patent Examining Proc. § 2173.05 14

[redacted]

TABLE OF ABBREVIATIONS

Abbreviation	Document	Exhibit Number
Am. Compl.	Amended Complaint	EDIS DOCID No. 800563
CPre-HB	Complainant's Pre-Hearing Brief	EDIS DOCID No. 814389
RPre-HB	Respondent's Pre-Hearing Brief	EDIS DOCID No. 814384
SPre-HB	Staff's Pre-Hearing Brief	EDIS DOCID No. 814989
IMPORT	Joint Stipulation of Shoals and Voltage as to Importation, Sale, No Inventory, and No Cease and Desist Order	EDIS DOCID No. 814046
CPost-HB	Complainant's Initial Post-Hearing Brief	EDIS DOCID No. 818482
RPost-HB	Respondent's Initial Post-Hearing Brief	EDIS DOCID No. 818489
SPost-HB	Staff's Initial Post-Hearing Brief	EDIS DOCID No. 818456
JPCC	Joint Proposed Claim Construction	EDIS DOCID No. 807044

[redacted]

I. INTRODUCTION

At issue are whether Voltage's[1] LYNX products are covered by at least one valid claim of the '153 patent (infringement), whether Shoals' BLA products are covered by at least one claim of the '153 patent (technical DI), whether Shoals made significant domestic investments in its BLA products (economic DI)—and, if the answer to all those questions is yes, what remedial orders should be entered (remedy).

Most of the technical issues come down to claim construction, and whether the *Markman* Order correctly construed "aperture" as: "entire pathway of the [feeder cable or drop line] within the [undermold or primary mold], when viewed as if the [feeder cable or drop line] were removed." Order No. 16 at 41. Below, Shoals demonstrates again—as it previously showed at trial, and in its initial post-hearing brief—that the intrinsic evidence bars Voltage's effort to rewrite the *Markman* ruling by striking "drop line," as well as Staff's effort to supplement it with a new construction of "drop line" as "drop line *wire*." A single wire can form two drop lines. Therefore, the Judge should rule for Shoals on infringement, technical DI, and definiteness.

Further, the *Milk* factors militate against adjudicating AD LYNX infringement. But if the Judge decides otherwise, AD LYNX should be found to infringe. And as Staff agrees, Voltage's prior-art based invalidity defense fails. SPost-HB at 1, 59, 63. Finally, vindication of the *Markman* Order also deprives Voltage of any real argument against Shoals' measurement of economic DI—leaving the plain, inescapable truth that Shoals' top-to-bottom development and manufacturing of the BLA in Portland, Tennessee is a domestic industry.

Tellingly, instead of diving into what really matters, the issues that need resolving, Voltage begins its initial post-hearing brief by talking about two patents that are no longer at

[1] Terms Shoals defined in its initial post-hearing brief are used herein with the same meanings.

[redacted]

issue. The sideshows do not end there. For example, Voltage gives a five-page narrative of its *unsuccessful* effort to harass Mr. Weiner, a Shoals expert, into agreeing that a new definition of "aperture" put forward by Dr. Cameron, Voltage's expert, is "consistent with" the *Markman* Order's definition—even though the *Markman* ruling refers to a drop line but Dr. Cameron's version does not, as Mr. Weiner repeatedly pointed out. RPost-HB at 51–55; Tr. (Weiner) at 1304:3–11, 1304:12–25. Voltage returns to this episode several times, once even embellishing that "panic from Shoals' counsel ensued." *Id.* at 7–8; *see also id.* at 10, 28–29, 137–38. If Voltage had *real* evidence to fill those pages, instead of a misremembered anecdote about how it was supposedly kept from the admission it wanted, presumably it would have used that instead. In a further diversionary maneuver, Voltage tries to position itself as the defender of the *Markman* Order—when in truth Voltage seeks to rewrite both the order's construction of the "aperture" terms and its definition of skill in the art.

Coming back now to what really matters, the plain truths that Shoals summarized above should lead to an initial determination in Shoals' favor. And as Staff agrees, it should result in an exclusion order secured by 100% bond.[2] SPost-HB at 77.

II. JURISDICTION AND IMPORTATION

Voltage entered into a Joint Stipulation as to Importation, [redacted] Voltage now asserts it "has not imported certain LYNX

[2] Substantive issues aside, Voltage's brief also suffers from presentation defects, such as omitted, incomplete, or inaccurate record citations. *See, e.g.*, RPost-HB at 48 ("*See* JX-0298 (*Markman* Tr.) at [blank]"), 71 ("Tr. (Ge) at [blank]"), 102 (citations identified as "CITE" or "*see* Section XXXXX"). Shoals has tried to identify and address what it believes Voltage intended to cite. If Shoals fails in that endeavor, either Voltage should be precluded from relying on what it failed to cite correctly, or Shoals should be given leave to address whatever Voltage intended to refer to.

[3] [redacted] *See* SPost-HB at 8.

[redacted]

Trunk Bus products accused of infringing the ’153 patent since it issued on June 27, 2023, so the Commission does not have *in rem* jurisdiction over those products.” RPost-HB at 31. [redacted] Voltage’s assertion also contradicts deposition testimony from its own corporate witness, Ms. Ge, [redacted]. *See* JX-0210C (Ge) at 199:20-204:7. Voltage’s late effort to muddy and mischaracterize the record on *in rem* jurisdiction should not be credited.

III. CLAIM CONSTRUCTION

As noted above, much depends on the interpretation of the “aperture” claim terms, and more specifically on whether the *Markman* Order’s tentative construction becomes final. If it does then it will be outcome-determinative for infringement, technical DI, and definiteness. *See* RPost-HB at 74–81, 102; SPost-HB at 36–40, 51. It also defeats the only counterargument advanced against the representativeness of Shoals’ infringement and technical DI analyses. RPost-HB at 58, 102. And it undoes Voltage’s and Staff’s only serious argument that Shoals’ economic DI calculations include investments for non-practicing products. RPost-HB at 143–144; SPost-HB at 65–66.

Shoals pointed out in its initial brief that Voltage’s and Staff’s positions on those issues were at odds with the *Markman* ruling. But it confessed not knowing whether they would defend their positions “by expressly challenging the *Markman* Order’s constructions … or by belatedly proposing a new construction of ‘drop line.’” CPost-HB at 16. The answer is now known: both. Voltage wants to rewrite the *Markman* Order’s construction of “aperture,” without the term “drop line” (RPost-HB at 49, 50–51); Staff seeks to supplement it with a new construction of “drop line.” SPost-HB at 26. Both are wrong. As demonstrated by Shoals in its initial brief and

[redacted]

below: the ’153 patent distinguishes drop lines from the wires forming them (CPost-HB at 16–21), contra Staff; and the *Markman* Order correctly associates the second and third apertures with drop lines rather than drop-line *wires* (Order No. 16 at 39–40, 49), contra Voltage. Further, under the *Markman* Order’s construction, “aperture” is not indefinite. Order No. 16 at 41.

A. The *Markman* Order correctly interprets the “aperture” terms.

The *Markman* Order construes “aperture” as:

> entire pathway of the [feeder cable or drop line] within the [undermold or primary mold], when viewed as if the [feeder cable or drop line] were removed.

Order No. 16 at 41. In adopting this construction, the Judge declined to accept proposals from Voltage and Staff to define aperture with respect to the drop line *wire*. *See id*. at 38. Nonetheless, without moving to reconsider the *Markman* Order or having sought leave to offer additional expert evidence (*cf.* Order No. 16 at 49–50), Voltage and Staff now reargue claim construction. Staff wants the construction supplemented with a construction of “drop line,” as:

> the entire “drop line” wire of element 12 … or simply the entire drop line/wire used … to create one or more drops.

SPost-HB at 30. While Voltage argues that it should be rewritten, without “drop line,” as:

> 3-D hole (i.e., the entire pathway for a cable within the [undermold or primary mold]) when viewed as if the entire cable has been removed.

RPost-HB at 49. They defend their positions with what amount to generous, expert-sponsored supplementation and revision of the ’153 patent itself. They could not do otherwise: Staff’s argument is irreconcilably at odds with the *actual* specification and prosecution history, and Voltage’s is similarly contrary to the claims *as written*.[4]

[4] Expert testimony is always of questionable value in claim construction. The testimony from Voltage’s technical experts should count for even less here because instead of expert testimony

[redacted]

1. The specification and prosecution history require a distinction between drop lines and wires.

Staff has frequently joined Voltage in arguing that Shoals is procedurally out of order. It is ironic, then, that Staff waited for post-hearing briefing to advocate construction of "drop line."[5] *See* SPre-HB at 67–68; *compare* SPost-HB at 26. Staff tries to frame the issue as construction of the *Markman* Order; and Staff and Voltage invest heavily in arguing about what was argued at the *Markman* hearing, and how the *Markman* Order should be "clarified." SPost-HB at 22–30; RPost-HB at 47–49. But all this is doubly misguided. First, it is not the parties' job to instruct the Judge on what her order means—especially when the lesson concludes by saying that the order must *supplemented* or *revised* to more accurately capture what they say must have been meant all along. Second, the fundamental issue is not how to interpret the *Markman* Order but how to interpret the patent. Shoals will focus on *that*, and resist being drawn into diversionary epicyclic arguments about *Markman* Order exegesis.

a. The patent does not use "'wire 12' or 'drop wire 12' or 'drop cable 12.'"

According to Staff, "'drop line 12' as used in the specification and Figures would be viewed by a POSITA as the same as 'wire 12' or 'drop wire 12' or 'drop cable 12.'" SPost-HB at

---

about the industry, it is openly and avowedly "based on their analysis of the intrinsic record." *See* RPost-HB at 34. Analyzing the intrinsic record is the Judge's domain. Experts should confine themselves to their technical expertise. *Vitronics Corp. v. Conceptronic, Inc.*, 90 F.3d 1576, 1585 (Fed. Cir. 1996) ("But testimony on the *technology* is far different from" expert testimony "on the *proper construction* of a disputed claim term") (emphasis in original). Voltage's supplemental expert testimony also is improper because as Voltage and Staff acknowledged, after the *Markman* Order, "no party proposed any further supplemental expert disclosures or procedures. Accordingly, the parties' experts were limited at the evidentiary hearing to what they disclosed during expert discovery." RPost-HB at 32; SPost-HB at 23.

[5] Staff's push to construe "drop line" as "drop line wire" is also inconsistent with what *everyone* agreed to at the *Markman* hearing. *See* Order No. 16 at 49 (quoting counsel from all parties agreeing that a single wire could form multiple drop lines).

[redacted]

28; *accord* RPost-HB at 49–50. The specification text uses reference number "12" eleven times: first, when defining it: "12—Drop line" (JX-0089 at 4:18); seven times in the phrase, "drop line 12" (*id.* at 4:57, 64, 65, 66; 5:3, 61, 64); and three times in the phrase, "drop lines 12" (*id.* at 5:4, 22, 25–26). *Never* does the patent refer to "wire 12," "drop wire 12," or "drop cable 12."

b. Dr. Cameron confuses the grammatical distinction between "drop" and "drop line" with a structural one.

Staff faults Shoals for equating "drop line" with "drop." SPost-HB at 28; *accord* RPost-HB at 50. But the patent itself says, for example, both that "FIG. 29 depicts a dual drop lead assembly" and that "dual drop *lines* 12 [are] shown in FIG. 29." JX-0089 at 2:66, 5:4 (italics added). Staff nonetheless argues that equating "drop line" and "drop" "creat[es] confusion." SPost-HB at 28; *accord* RPost-HB at 50. And indeed, an outright equation, "drop line = drop," leads to confusion. But Staff is wrong about the nature of the confusion, and what it means for claim construction.

Voltage's Dr. Cameron wove the drop–drop line distinction from a pattern she observed in how the '153 patent refers to certain figures. Specifically, the patent's Brief Description of the Drawings uses the phrase, "a single drop line" in reference to Figures 5, 6, 9, and 10; and to describe Figures 11–60, it uses "single drop" and "dual drop" but not "single drop *line*" or "dual drop *line*." *See* RPost-HB at 48–49; *accord* SPost-HB at 28. However, the patent does not use "drop" and "drop line" to refer to different *things* but as different parts of speech: "drop" is an adjective, "line" is a noun, and "drop line" is a noun phrase. Thus, the patent first describes what is shown in Figures 5 and 6 as a "lead assembly having a single drop line per joint," and in Figures 9 and 10 as "configuration[s] where a lead assembly has a single drop line" (JX-0089 at 2:34–37, 41–46)—with "drop" modifying "line," and "single" modifying the noun phrase "drop line," to form the longer noun phrase "single drop line."

[redacted]

Having thus introduced the convention of characterizing joints and lead assemblies by reference to their number of drop lines, the patent then uses the noun phrases "single drop lead assembly" and "dual drop lead assembly" when describing Figures 11–26 and 29–60, to mean "lead assembly with one drop line" and "lead assembly with two drop lines," respectively. *Id.* at 2:47–62, 2:66–4:3. Further illustrating how the grammar works, the specification explains:

> FIG. 29 depicts a dual drop lead assembly for 750MCM cable;
>
> FIG. 30 depicts a single drop lead assembly for 750MCM cable;
>
> …
>
> Joint 17 of lead assembly 10 may include a single drop line 12, as shown in FIG. 30, or dual drop lines 12, as shown in FIG. 29 …

Id. at 2:66–3:2; 5:2–4. Voltage and Staff have presented no evidence refuting this reading.

c. The patent counts drop lines by connections, not wires.

The patent further explains the relationship between Figures 29 and 30 as follows:

> Joint 17 of lead assembly 10 may include a single drop line 12, as shown in FIG. 30, or dual drop lines 12, as shown in FIG. 29, corresponding with connecting to a single wire harness or two wire harnesses, respectively.

JX-0089 at 5:2–6. The patent counts drop lines by reference to the number of connected wire harnesses, not the number of wires used to make the drop lines. *See also* CPost-HB at 18.

d. The specification and prosecution history teach two drop lines made of a single wire.

Finally, the intrinsic evidence forecloses Staff's proposed construction of "drop line" as "the entire 'drop line' wire"—both because it teaches *two* drop lines formed of a *single* wire, and because it does *not* disclose two drop lines formed of *separate* wires.

The patent includes a series of figures relating to "a dual drop lead assembly for 750MCM cable" (JX-0089 at 3:3–17):

[redacted]

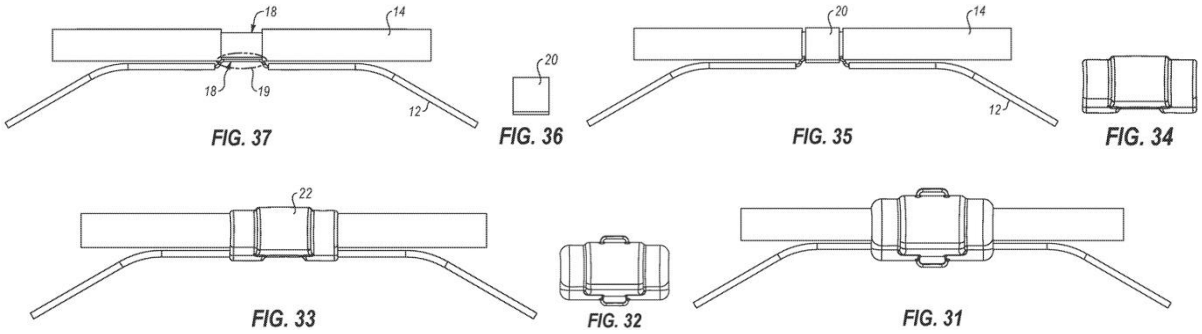

The obvious progression was expressly shown during prosecution of the parent patent:

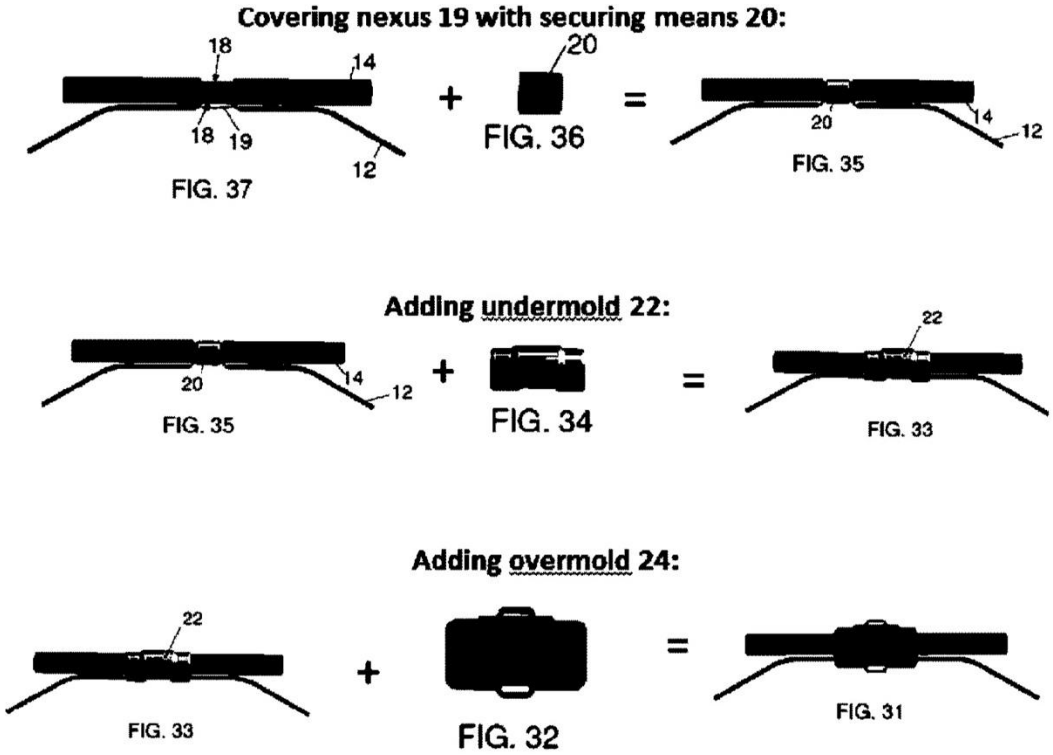

JX-0085.0128. The specification text makes clear that Figure 29 is an alternative view of the endpoint of that same progression. *See* JX-0089 at 4:58–61 ("As shown in FIG. 35, the drop line and feeder cable are held together by compression lug 20, which is surrounded by undermold 22 (FIG. 33), which is surrounded by overmold 24 (FIG. 29)."). Thus Figure 37 becomes Figure 29 by successively adding compression lug 20, undermold 22, and overmold 24:

[redacted]

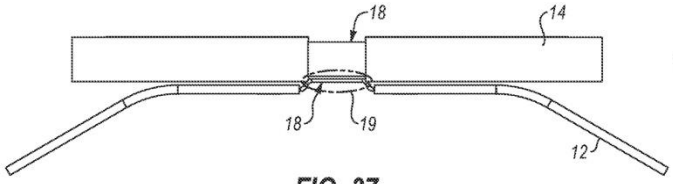

FIG. 37

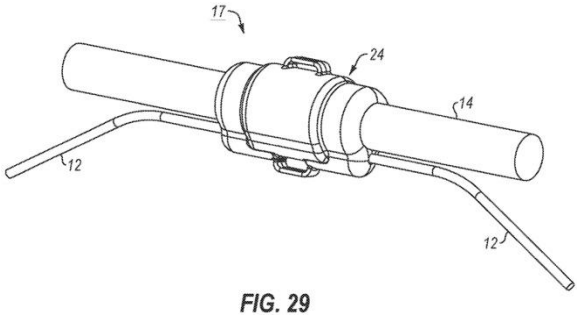

FIG. 29

As noted above, the specification expressly describes Figure 29 as having "dual drop lines," *each* of which is labeled "12" in the Figure. *Id.* at 5:4. And Figure 37 shows only one drop-line wire. Thus, the patent teaches two drop lines formed of a single wire. *See CVI/Beta Ventures, Inc. v. Tura LP*, 112 F.3d 1146, 1153 (Fed. Cir. 1997) ("the patent drawings are highly relevant in construing … the claims").

e. Conversely, the '153 patent does not disclose an embodiment with two drop lines made of a single wire.

As has been observed, the '153 patent's textual disclosure is brief (six columns). But it is amply illustrated. Indeed, at first, its mass of figures can seem unwieldy; but on examination, order quickly emerges. Of the 61 figures in the patent, Figures 29–60 focus on joints[6] and their components. Those joints are classified in three ways: one drop line or two, a feeder cable that is 750MCM or 250MCM in diameter, and as an "end piece" or not. JX-0089 at 2:34–4:3. The dual-drop joints are shown in Figures 29, 31–38, 47, and 49–54. Of those, Figures 38 and 54 show only fully assembled, end-piece dual-drop joints (with 750MCM and 250MCM feeder cables, respectively). The remaining figures are more instructive. Figures 29 and 31–37 relate to a joint with 750MCM feeder cable; as set forth above, they illustrate the buildup of a fully assembled, *dual*-drop joint from the nexus, where only *one* drop-line *wire* is shown, to the overmold. Figures

[6] Shoals' witnesses generally referred to what the patent calls "joints" as "mold drops."

[redacted]

47 and 49–53 similarly illustrate the buildup of a dual-drop joint with 250MCM feeder cable;[7] and like Figure 37, Figure 53—the starting point for the 250MCM progression—shows an exposed nexus with only one drop-line wire. Thus, both of the figures that show an exposed nexus for a dual-drop joint show a single wire of which both drop lines are formed. But there is *no* disclosure, in the figures or elsewhere, of two drop lines, each formed of its own wire.

That is why Voltage's Dr. Cameron—just as she had to revise the *Markman* Order, to explain how she thinks *it* should be understood (*see* RPost-HB at 49)—had to *invent* a figure not found in the '153 patent, to illustrate how she thinks its claim language should be construed. Below right is *actual* Figure 7 from the '153 patent; below left is how Dr. Cameron redraws it, to justify her interpretation of the claim language:

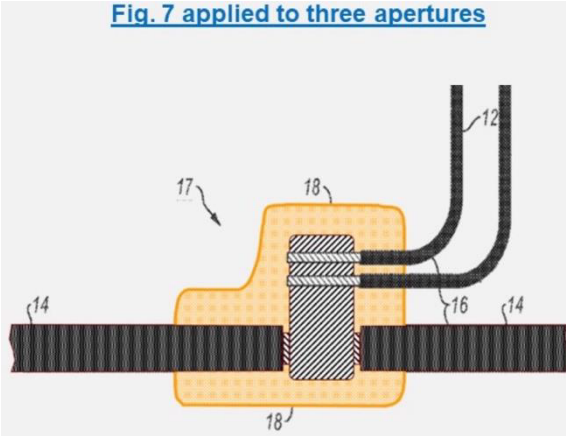

Dr. Cameron's Revised Figure

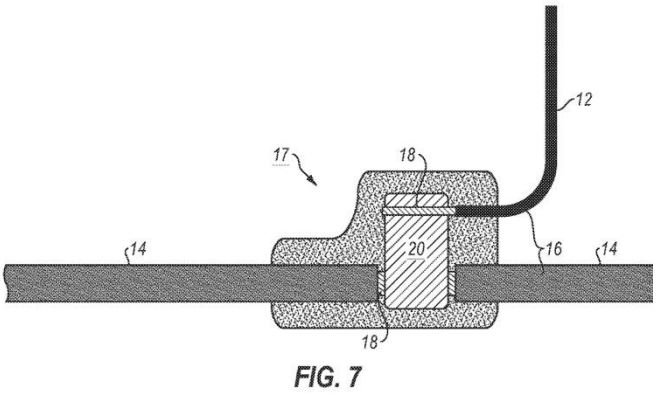

'153 patent, Figure 7

RDX-0002C.0038 (depicting redrawn Figure 7); JX-0089; *see also* RPost-HB at 47. It is telling that Dr. Cameron had to make a new figure to support her position, while Shoals supports its

[7] The 250MCM series has two fewer figures because it skips the compression lug.

[redacted]

position with existing figures.[8]

To be clear: Shoals is not saying the intrinsic evidence *requires* that two drop lines be formed of a single wire, or—equivalently—that it *precludes* drop lines formed of separate wires. Shoals' point is more modest: the intrinsic evidence establishes that a single wire *may* form two drop lines. Staff's theory that "'drop line' … means the entire 'drop line' wire" (SPost-HB at 30) is inconsistent with the intrinsic evidence because it would rule out that possibility.

In addition, Staff's interpretation creates further problems that Shoals' does not. As shown above, Figures 29 and 31–37—as well as corresponding Figures 47 and 49–53, for a joint with 250MCM feeder cable—illustrate a dual-drop joint with just one drop-line wire. Because there is no corresponding disclosure of a dual-drop joint with two drop-line wires, and because all the claims of the '153 patent require two drop lines (*see* JX-0089 at 6:50–9:4), there would be no disclosed embodiment and indeed no written description support for the invention as claimed, were Staff's construction adopted. An interpretation that leaves the claimed invention without a disclosed embodiment "is rarely, if ever, correct and would require highly persuasive evidentiary support, which is wholly absent in this case." *See Vitronics*, 90 F.3d at 1583. Further, "it is reasonable to infer that the PTO would not have issued an invalid patent, and … ambiguity in the claim language," if there were any, "should therefore be resolved in a manner that would preserve the patent's validity." *See Phillips v. AWH Corp.*, 415 F.3d 1303, 1327 (Fed. Cir. 2005). These are far weightier considerations than whether there might be some redundancy in the claims. *See Decisioning.com, Inc. v. Federated Dept. Stores, Inc.*, 527 F.3d 1300, 1312 n. 6 (Fed.

[8] And it is ironic that Voltage relies on a fabricated figure to support its position but suggests that the patent may not claim embodiments shown in the figures actually disclosed. *See* RPost-HB at 48.

Cir. 2008) ("surplusage may exist in some claims"). All the more reason to reject Staff's (belatedly) proposed construction of "drop line."

2. The claim language ties the second and third apertures to drop lines, not wires.

As set forth in the table below, all the independent claims of the '153 patent require three apertures—one for the feeder cable, and two for drop lines:

	First aperture	Second aperture	Third aperture
Claim 1	the feeder cable extends through the first aperture [JX-0089 at 6:63–64]	the drop line extends from the second aperture [*id.* at 7:1–2]	a second drop line extends from the third aperture [*id.* at 7:6–7]
Claim 21	the feeder cable extends through the first aperture [*id.* at 8:25]	the drop line extends into the second aperture [*id.* at 8:28–29]	the second drop line extends into the third aperture [*id.* at 8:32–33]
Claim 24	the feeder cable extends through the first aperture [*id.* at 8:58]	the drop line extends into the second aperture [*id.* at 8:62–63]	the second drop line extends into a third aperture [*id.* at 9:2–3]

As the *Markman* Order observed: "all parties appear to agree that the first aperture follows the feeder cable, which must extend from one side of the mold through the nexus (*e.g.*, a compression lug) and then through to the other side of the mold." Order No. 16 at 48. Further, "[t]he claim language ties the 'second aperture' and the 'third aperture' to … drop lines." *Id.* at 49. Thus, the order "construes 'aperture' as the 'entire pathway of the [feeder cable or drop line] within the [undermold or primary mold], when viewed as if the [feeder cable or drop line] were removed.'" *Id.* at 41.

Voltage wants to rewrite the construction of "aperture" to read: "3-D hole (i.e., the entire pathway for a cable within the [undermold or primary mold]) when viewed as if the entire cable has been removed." RPost-HB at 49. The claim language ties the *first* aperture to the *feeder cable*. *See* JX-0089 ('153 patent), claims 1, 21, 24. But as the *Markman* Order recognizes, "[t]he

[redacted]

claim language ties the 'second aperture' and the 'third aperture' to … *drop lines*." Order No. 16 at 49 (italics added). Voltage cannot and does not point to any claim language tying the second and third apertures to a *cable*. *See* RPost-HB at 41–47, *generally*.[9] Thus, the *Markman* Order is right to define "aperture" with reference to the "pathway of the [feeder cable or drop line]" rather than "a cable."

The *Markman* Order finds further support in the prosecution history of the '153 patent's parent, U.S. Patent No. 10,992,254. The term "aperture" *did not* originate with "a 113-word amendment" that the examiner proposed in April 2020, and "the applicant accepted without comment." *See* RPost-HB at 129. Instead, the examiner used it more than two years earlier, in a December 2017 office action, then again in September 2018 and June 2019, each time to refer to something formed in a mold to "allow cables and lines access to the nexus within." JX-0085.163, 198, 234. In the context of the '254 and '153 patents, an aperture allows cables (*i.e.,* feeder cables) and lines (*i.e.,* drop lines) to access the nexus. *Id.* For drop lines, this tells against construing "aperture" as *more than* the pathway required for the drop line to reach the nexus. In particular, it tells against construing "second aperture" and "third aperture" with reference to an entire wire rather than a particular drop line.

3. The *Markman* Order's construction does not lead to indefiniteness.

According to Staff, unless the *Markman* Order is supplemented with Staff's proposed construction of "drop line," "all the other potential tests and possibilities raised by Respondents" about where apertures end may "rais[e] questions as to whether … the 'aperture' terms are

[9] Voltage's newly proposed construction is at odds with their argument at the *Markman* hearing that characterizing "aperture" as a "hole" is inappropriate, preferring "pathway." *See, e.g.,* JX-0298 (*Markman* Tr.) at 180:15–17, 182:6–15.

[redacted]

properly enabled[10] and reasonably certain to a POSITA." SPost-HB at 64–65. Staff thus defers to Voltage on indefiniteness. Voltage, for its part, contends that the "aperture" terms are indefinite because over the course of this proceeding, several tests have been proposed for determining where a drop-line aperture—*i.e.*, second or third aperture—starts (or stops), and "each of the four tests may provide different results." RPost-HB at 133. Voltage is wrong.

a. "aperture" is sufficiently definite.

Voltage's argument does not target the term "aperture," itself. To the contrary, *everyone* agrees an aperture is a pathway, viewed as if the structure for which it is the pathway were removed. *See* Order No. 16 at 38 (summarizing positions); *see also* RPost-HB at 6 ("Dr. Cameron explained that in the context of the mold structure, an aperture is a … pathway …").

Voltage points out that the specification uses "aperture" in a different context than the claims. However, this does not make the term indefinite. *See Manual of Patent Examining Proc.* § 2173.05(e) ("that a term … used in the claim has no antecedent basis in the specification disclosure does not mean … that the term … is indefinite"); *Molins PLC v. Textron, Inc.*, 48 F.3d 1172, 1180 n. 10 (Fed. Cir. 1995) ("While the MPEP does not have the force of law, it is entitled to judicial notice as an official interpretation of statutes or regulations as long as it is not in

[10] Staff's invocation of enablement comes far too late to be considered. *See* Ground Rule 9.2 (contentions not detailed in the prehearing brief are abandoned); SPre-HB at, *e.g.*, 65–68 (§ IX.D, '153 claim construction). Further, Voltage's contention that "definiteness … requires both 'written description' and 'enablement'" (RPost-HB at 106) simply is not true: written description and enablement are (mutually distinct) requirements imposed by 35 U.S.C. § 112, subdivision (a); definiteness is mandated by subdivision (b), which requires "claims particularly pointing out and distinctly claiming the subject matter which the inventor or a joint inventor regards as the invention." *See Enzo Biochem, Inc. v. Gen-Probe Inc.*, 323 F.3d 956, 963 (Fed. Cir. 2002) (recognizing the "severability" of the written description and enablement requirements, stating, "[w]e have interpreted [section § 112] as requiring a 'written description' of an invention separate from enablement") (*quoting Vas–Cath Inc. v. Mahurkar*, 935 F.2d 1555, 1563 (Fed. Cir. 1991)). And in any event, neither Staff nor Voltage presents any evidence or even argument on enablement, as opposed to written description.

[redacted]

conflict therewith."). Instead, whether "aperture" "nonetheless has a reasonably ascertainable meaning," "despite lack of explicit antecedent basis," "must be decided in context." *See Energizer Holdings, Inc. v. Int'l Trade Comm'n*, 435 F.3d 1366, 1371 (Fed. Cir. 2006). Where "[n]either [Staff] nor [Voltage] argued that they did not understand the intended scope because of the absence of an antecedent," there is no indefiniteness. *See id.*; *see also Network Com., Inc. v. Microsoft Corp.*, 422 F.3d 1353, 1359 (Fed. Cir. 2005) (affirming construction of claim term that has neither a "commonly understood meaning" nor "a specialized meaning in the relevant art").[11]

Voltage's indefiniteness argument, and Staff's in-the-alternative echo thereof, go to the as-if-removed structure—not to the undisputed identification of "aperture" as the pathway for such structure. And even as to that, there is no dispute for the *first* aperture. Thus, the issue presented is whether "second aperture" and "third aperture" are sufficiently definite.

b. "second aperture" and "third aperture" are sufficiently definite.

That different constructions have been proposed for "second aperture" and "third aperture" does not make them indefinite. *See Nevro Corp. v. Boston Sci. Corp.*, 955 F.3d 35, 41 (Fed. Cir. 2020) ("The test is not … whether a claim is susceptible to differing interpretations.");

[11] Voltage also alleges that the aperture "phrase and concept was introduced by the examiner during the prosecution of the '254 patent in a 113-word amendment," and "the prosecuting attorney … had no sense of what the examiner intended with this amendment." RPost-HB at 129. But as shown above, Voltage is wrong about the origin of "aperture," which goes back in the prosecution history to at least 2017, as a term describing what allows access to the nexus. As for the other allegations, Voltage cites no authority for the notion underlying its speculations that absence of an express explanation by the examiner somehow makes the language of the amendment indefinite. On the contrary, the prosecution history must be "viewed … not for the examiner's or the applicant's subjective intent, but as an official record that is created in the knowledge that its audience is not only the patent examining officials and the applicant, but the interested public." *Biogen, Inc. v. Berlex Labs., Inc.*, 318 F.3d 1132, 1139 (Fed. Cir. 2003); *see also Vitronics*, 90 F.3d at 1584 ("Nor may the inventor's subjective intent as to claim scope, when unexpressed in the patent documents, have any effect.").

[redacted]

Energizer, 435 F.3d at 1371 ("The Commission erred in holding that the need to construe a claim, or the proffer of alternative constructions, renders the claim indefinite."). Rather, the test is whether the claim language, read "in light of the specification, the prosecution history, and other relevant evidence," permits a skilled artisan to determine infringement, with reasonable certainty. *See Nature Simulation Sys. Inc. v. Autodesk, Inc.*, 50 F.4th 1358, 1364 (Fed. Cir. 2022). Here, Voltage has further distilled the precise issue presented, as whether "one of ordinary skill in the art would … have … reasonable certainty as to whether an aperture extends partially or completely through a molding." RPost-HB at 128. And because no one alleges uncertainty in determining whether the feeder-cable aperture (*i.e.*, first aperture) extends completely through a mold, the issue further reduces to: whether one of skill would have reasonable certainty as to whether a drop-line aperture (*i.e.*, second or third aperture) extends partially or completely through a mold.

Here, the *Markman* Order's construction provides reasonable certainty as to whether the drop-line apertures extend partially or completely through a mold. For the drop-line apertures, the *Markman* Order's construction is: the entire pathway of the drop line within the undermold or primary mold, when viewed as if the drop line were removed. *See* Order No. 16 at 41. Thus, the aperture extends *no farther* than the combination of mold and drop line; once either the mold or the drop line ends, so too does the aperture.

Nor is there uncertainty in determining, more specifically, whether the drop-line apertures of the LYNX and BLA products extend partially or completely through an undermold or primary mold.

Mr. Brooks testified that the drop-line apertures of those products do not extend into the nexus. Tr. (Brooks) at 547:21–25. He justified this opinion, in part, by saying "there's no

[redacted]

undermolding inside the nexus." *Id.* at 547:17. Mr. Brooks' opinion that the drop-line apertures do not extend into the nexus is consistent with how the examiner first used the term "aperture," to refer to what is formed in a mold to "allow cables and lines access to the nexus within." JX-0085.163, 198, 234. Just like the drop line has "done its job" once it "bring[s] solar power from the array to the nexus, and … become one with the nexus" (Tr. (Brooks) at 600:21–23), so too the drop line's aperture has done its job once it has allowed the drop line "access to the nexus." JX-0085.163, 198, 234. But Voltage and Staff have disputed Mr. Brooks' testimony by arguing it is somehow inconsistent with saying that the first aperture continues through the nexus.

However, Mr. Brooks also testified that the drop line ends somewhere *within* the nexus. Tr. (Brooks) at 548:7–11. Voltage and Staff's only argument against this testimony is their theory that the drop line is the entire wire. As shown above, their contention is not correct. With that issue resolved, no dispute remains as to whether the drop line ends within the nexus.

Once that is settled, there can be no dispute that the drop-line aperture extends only partially through the undermold. Whether or not the aperture—*i.e.*, the drop-line pathway within the mold—stops where the nexus starts, it cannot continue farther than the drop line itself. Each drop line ends within the nexus and "does not go out the other side regardless of what the wire does." Tr. (Brooks) at 530:14–15. The nexus, in turn, is *fully encased* by the undermold (independent claim 1 and claims depending therefrom) or primary mold (independent claims 21 and 24, and dependent claim 23). It follows, inescapably, that the drop line does not extend completely through the mold; therefore, its *pathway* (aperture) cannot continue completely through the mold, either. Voltage's expert made the point well:

> So we already know that we have the drop line and the feeder cable that are electrically coupled at the nexus, and we know that we have an undermold that fully encases the nexus.

[redacted]

> So … that means you would necessarily have an aperture that's partially through, because you already know the undermold fully encases the nexus and you already know that the drop line is coupled to the feeder cable at the nexus.
>
> And so this just basically means you don't have to worry about whether there is an aperture extending completely through or partially through, rather. You just already know it's there.

Tr. (Cameron) at 1070:10–24.

By providing reasonable certainty, when read in light of the evidence, that the second and third apertures are pathways of drop lines, not wires, the claim language also provides reasonable certainty as to whether a given drop-line aperture extends completely or partially through the mold. Therefore, the "second aperture" and "third aperture" terms are not indefinite. *Nautilus, Inc. v. Biosig Instruments, Inc.*, 572 U.S. 898, 910–11(2014).

B. Other new issues raised by Voltage and Staff will be addressed in context.

In addition to a belatedly proposed construction of "drop line," Voltage and Staff also make a late proposal for construing "fully encased." Without conceding the propriety of their belated constructions, Shoals follows their lead by addressing that in context, below. *See* § IV.D.

IV. INFRINGEMENT

A. Voltage and Staff concede the sufficiency of Shoals' representative infringement analysis.

Voltage does not contest that Shoals' infringement analysis is sufficiently representative if the *Markman* Order constructions applied by Mr. Brooks are not altered:

> Under the infringement theory presented by Shoals and its infringement expert, Mr. Brooks, any cable assembly with a mold structure having a trunk or feeder and two or more branches … infringe the '153 patent….
>
> During discovery, *Voltage produced 15 different LYNX Trunk Bus configurations*, including a mid-production sample (with no outer mold) and a completed product, *and identified the inner mold structure as representative of the dimensions of the mold structure for the undermold or innermold t*[redacted]

> [redacted] RX-0339C; CX-0738C.
>
> *Through these disclosures, Voltage provided product samples covering all of its Trunk Bus configurations' mold structures for the alleged undermold* ….

RPost-HB at 58–59 (emphasis added). Mr. Brooks testified in detail about one representative configuration (CPre-HB at 33–52) and addressed each of the remaining configurations[12] with annotated photographs (*id.* at 59–64), explaining infringement in each instance by noting the presence of at least two drop lines, each following its own aperture to a nexus with the feeder cable (Tr. (Brooks) at 446:14–451:21). Mr. Brooks thus provided infringement testimony regarding every mold configuration used by Voltage. That he did so using the configurations Voltage supplied, which had two, four, and six drop lines, does not make the analysis unrepresentative of molds having three or five drop lines because, aside from having the required minimum of two drop lines: "[Voltage] identified the inner mold structure as *representative of the dimensions of the mold structure for the undermold or innermold* [redacted]" RPost-HB at 58–59 (emphasis added). In both interrogatory responses and in correspondence accompanying their production, Voltage characterizes 4-drop-line samples as "1-4" or "up to 4" and 6-drop-line samples as "1-6" or "up to 6." JX-0198C at 0014–0015, 0019–0020 (response to Shoals' interrogatory no. 1 seeking identification of accused products); RX-0339C (November 20, 2023 letter from Voltage counsel).[13] Voltage's explanation below, provided "by way of

[12] Except for the two that were never received from Voltage. CPost-HB at 61. The commonalities among the other 13 make it more likely than not that these missing two have internal structure like that of their sibling molds, *i.e.*, identical in all the ways that matter under the asserted claims. *See* RPX-0014–0017 (Voltage's physical exhibits of the mold samples not received by Mr. Brooks; showing no signs of deviation from the design of the others).

[13] [redacted] JX-0198C at 0019 n. 1; CPost-HB at 55 n. 14.

example," makes clear its assurance that the 4-drop-line and 6-drop-line samples are representative of 3- and 5-drop-line configurations as well. CX-0738C; CPost-HB at 32.

CX-0738C. The statement above from its initial post-hearing brief is Voltage's only pronouncement on representative infringement, except one sentence in the Remedy section where it argues that any limited exclusion order "should be specific to Voltage LYNX trunk bus products with an even number of drop lines," but only "if a violation is found *only* as to trunk bus products with even-numbered drop lines *and* these products are not representative of trunk bus products with odd-numbered drop lines." RPost-HB at 164 (emphasis added). These triggering conditions cannot be met given Voltage's assertions on representativeness.

Staff makes a similar argument regarding odd-numbered drop lines, but without the conditions, and with the important concession that "Staff is of the view that each of Voltage's physical samples having an even number of drops can be found to be representative of other product models also having an even number of drops." SPost-HB at 32. Staff supports its position regarding odd-numbered drop lines with the very correspondence identified above, CX-0339C and JX-00738C, SPost-HB at 33. Staff has never offered an explanation for why the addition of a third or a fifth drop line to an infringing product that has two or four drop lines makes any difference

[redacted]

at all. In any event, Staff's concession regarding the even-numbered drop lines is thus effectively a concession as to odd-numbered drop lines as well.

There is clearly no longer any issue regarding representativeness among Voltage's various mold drop configurations: any one is representative of the rest. The same can be said of the LYNX Trunk Bus assembly: any one having at least one mold drop with two or more drop lines is representative of the rest, for purposes of evaluating whether it is a lead assembly as claimed in the '153 patent. Consistent with Voltage's recognition above that infringement lies with "any *cable assembly* with *a mold structure* having a trunk or feeder and two or more branches," Mr. Brooks explained that a "LYNX Trunk Bus" is an *assembly* of mold drops, not just a single mold drop, and each assembly is customizable to have the cable lengths, sizes, and drop line configurations necessary for that particular job. Tr. (Brooks) at 396:11–401:16 (referring to JX-0159C and CPX-0024); CPost-HB at 29.

Ms. Ge offered the same observation. She testified that Voltage uses shop drawings like the one below from the first page of RX-0057C [redacted] Tr. (Ge) at 963:6–23.

[redacted] Tr. (Ge) at 963:24–964:12.

Shoals' infringement evidence is sufficiently representative of all LYNX mold

[redacted]

configurations having two or more drop lines, where at least two such drop lines extend through their own respective apertures to meet with a feeder cable at a nexus fully encased by the mold. It is likewise sufficiently representative of all LYNX Trunk Bus assemblies having at least one mold drop with two or more drop lines. CPost-HB at 30–33, 35, 52–64. *See Certain LED Lighting Devices*, Inv. No. 337-TA-1081, ID, 2018 WL 7350925 at *44 (Dec. 19, 2018) ("*Lighting Devices*") (finding expert infringement analysis of two models sufficiently representative of eight other models despite differences because "the products are similar to each other with respect to the features relevant to [the expert's] infringement analysis"), *review denied*, 2019 WL 1616251 at *3 (April 12, 2019).

B. Nothing in the briefing from Voltage and Staff undermines Shoals' preponderant evidence that LYNX infringes.

1. Mr. Brooks correctly applied the *Markman* Order's construction of "aperture."

Contrary to the breathless vitriol, Mr. Brooks faithfully applied the *Markman* Order's construction for "aperture." Voltage makes much of the *Markman* Order's adoption of "entire pathway" over Shoals' "all or part of the pathway" proposal for "aperture" but ignores the further finding that "the term 'aperture' refers to a pathway [1] *within the undermold or primary mold* [2] *for a feeder cable or drop line*." Order No. 16 at 40 (emphasis and bracketed numbering added). For "a feeder cable," there is no dispute about what it is or that it passes into, completely through, and out of "the undermold or primary mold." Its "entire pathway" is thus one "extending completely through" the undermold or primary mold. *See* Tr. (Cameron) at 1076:6–8 ("I do think there's an aperture that goes completely through the feeder cable."). The only disputed "aperture" question relevant to the '153 patent claims is thus whether the "entire pathway … for a … drop line" "within the undermold or primary mold" extends "completely

[redacted]

through" the mold, or only "partially through" it. JX-0089, claims 1, 21, 24. The intrinsic record recounted above makes clear that "a drop line" necessarily ends at or somewhere within the nexus—beyond which point the wire, if it continues, becomes a different drop line; therefore, the drop line's "entire pathway" "within the undermold or primary mold" cannot possibly extend "completely through the [undermold / primary mold]": it can only extend "partially through." This is so even if the drop line is "viewed as if … removed" because the aperture revealed would be one that enters one side of the mold, either stops at the nexus or somewhere inside it, and never emerges from the other side of the mold. The "entire pathway" and "viewed as if … removed" components of the *Markman* Order's construction do not require looking outside the "undermold or primary mold" or farther than the "drop line," as Voltage now argues.

2. Reading the *Markman* Order and applying its constructions did not change Mr. Brooks' opinions, as first given in his expert report and deposition, regarding the second and third apertures, as claimed by the '153 patent.

Mr. Brooks testified at the hearing that his current opinions regarding drop line "apertures" in the accused LYNX molds have not changed since he first issued his expert report and was deposed on it, both prior to the *Markman* Order. Tr. (Brooks) at 390:14–392:2. He also testified that the second and third apertures "extending partially through the undermold [primary mold]" are correctly highlighted in yellow in these detail images from RDX-0011 and RDX-0012:

RDX-0011	RDX-0012

Tr. (Brooks) at 609:10–610:3. Mr. Brooks then explained that he was asked at his deposition—before the *Markman* Order—to identify on an image from his expert report exactly where the third aperture existed. *Id.* at 610:4–611:5. The detail from CDX-0018 on the right below shows what he identified, using a green-ink pen.

RDX-0012	CDX-0018

Comparing the CDX-0018 detail to the detail from RDX-0012 on the left, there is clearly no difference between Mr. Brooks' pre- and post-*Markman* Order opinions regarding the structure that constitutes the second and third apertures "extending partially through the undermold [primary mold]." Animated protestations to the contrary are without merit.

3. The evidence does not support finding that two separate drop lines connected to two separate sets of solar panels are really just one single drop line if formed of a single wire.

Voltage's effort to reconstrue "aperture" to omit reference to "drop line" and Staff's effort to construe "drop line" for the first time both require one thing in common: a finding that

[redacted]

two separate drop lines coming into the nexus, from two separate sets of solar panels, are really just one single drop line, if formed of a single wire. Staff needs this finding to support its newly proposed construction of "drop line." Voltage needs it to justify erasing the distinction between the "drop line" expressly associated in the claims with the "second aperture," and the "second drop line" similarly tied to the "third aperture," a connection recognized and relied upon in the *Markman* Order construction for "[second/third] aperture … extending partially." Order No. 16 at 49. But the evidence cannot support such a finding.

At the hearing, Mr. Brooks identified the "second aperture" and "third aperture" elements "extending partially through" the Voltage mold drops based on the apertures' respective associations with "a drop line" and a *separate* "second drop line."

> Q. And why do you conclude that this only partially extends through the undermold?
>
> A. Because we're talking about a drop line here, singular, and, therefore, that drop line has nothing to do with this other drop line. Drop line 2 is drop line 2, drop line 1 is drop line 1.

Tr. (Brooks) at 429:6–11, *see also id.* at 398:21–399:1 ("drop lines" are "inputs"), 500:12–21 (input apertures are necessarily partial), 503:8–15 (same). Mr. Brooks also explained that the two drop lines are indeed separate drop lines even if formed of a single piece of wire.

> Q. And in your opinion would a person of ordinary skill consider the two drop lines made with a single wire to, nevertheless, be two drop lines?
>
> A. Yeah, how it's – what it's made out of is not important. It has two – it becomes two drop lines when it's put in this assembly.

Id. at 429:12–17, *see also id.* at 429:18–430:22 (agreeing with *Markman* Order regarding the existence of "scenarios involving multiple drop lines, which may apparently be comprised of a single cable," Order No. 16 at 49, and stating, "I believe in the industry there would be no confusion about what 2 looks like"). Mr. Brooks explained his rationale: since the main purpose

[redacted]

of a drop line is to get the electricity from the solar panels to the nexus, that drop line ends once the electrical coupling with the feeder cable is accomplished.

> The whole purpose of a drop line is to go from the connector, which is connected to the solar panels, and get that to the undermold, and it hasn't done its job unless it's done that, and it must pass through the molds, whatever molds there are, to seal it. The whole purpose of the molds is to seal them from the environment and get to the nexus. … Without a nexus, a drop line is just a wire. That's all it is.

Id. at 588:5–588:20, *see also id.* at 399:2–4, 507:23–508:3. Applying the *Markman* Order's construction for "aperture," Mr. Brooks further testified that, for a drop line, the aperture "is the space … that is displaced by the drop line coming in and doing its job getting to the nexus. *It does not go out the other side regardless of what the wire does*." *Id.* at 530:10–15 (emphasis added). Dr. Cameron agreed with Mr. Brooks that if two drop lines meet at the nexus, they both end there, even if they are made of one single wire, as illustrated by the vertical blue line she added to the center of the nexus in the image below to indicate the end of both drop lines:

[redacted]

CDX-0020 (depicting annotations made by Dr. Cameron), Tr. (Cameron) at 1158:13–1160:17.

Voltage and Staff did not present documentary evidence or fact witness testimony that Mr. Brooks is wrong on the facts—about what a drop line is or what it does, or that persons skilled in the art would regard two of them meeting at a nexus, with a feeder cable, as separate

[redacted]

drop lines, regardless of whether they are formed of one piece of wire.[14] Instead, Voltage and Staff rely only on opinion testimony from Dr. Cameron. Her testimony carries no weight, first and foremost, because it is expressly premised on how she would rewrite the *Markman* Order, not on the order itself. *See, e.g.*, Tr. (Cameron) at 1088:25–1089:19. Second, she was admitted at the hearing as an "expert in mechanical engineering and electrical connectors" (Tr. (Cameron) at 1046:2–10), which does not align with the *Markman* Order's determination that skill in the art requires "at least two years experience working with photovoltaic systems." Order No. 16 at 12. Dr. Cameron is not a POSA.

It shows in her analysis. Rather than offering something that might be helpful to the factfinder, about what a POSA would understand of the wires and cables that connect solar panels to feeder cables, she confines her analysis to the prosecution history, like a lawyer engaged to write a noninfringement opinion. And her opinion that she must be right or else the examiner's "113-word" amendment from the prosecution of the parent '254 patent would be "meaningless," collapses under its own weight. If that were indeed the case, then surely Voltage (and Staff) would have maintained Jonczyk (US2010/0139733) as an invalidating reference in this investigation, since it was the base reference that allegedly prompted the "113-word" amendment. JX-0085 at 0282–0299 (May 13, 2020 office action rejecting claims over Jonczyk as primary § 103 reference), 0310–0323 (the so-called "113-word" amendment, dated November 12, 2020), 0329 (notice of allowance in response to November 12, 2020 communication). That Jonczyk is not at issue says it all about the quality of Dr. Cameron's quasi-legal opinion.

This is not surprising. Since Dr. Cameron does not have the experience working with

[14] In fact, counsel for Voltage represented at the *Markman* hearing that "the *solar industry* would characterize these as two different drop lines." JX-0298 at 184:11–19 (emphasis added).

[redacted]

photovoltaic systems needed to qualify as a POSA, her testimony "serves only to cause mischief and confuse," and could "amount[ ] to nothing more than advocacy from the witness stand," as the Federal Circuit recently found, sitting in review of an Int'l Trade Comm'n investigation:

> To offer expert testimony from the perspective of a skilled artisan in a patent case—like for claim construction, validity, or infringement—a witness must at least have ordinary skill in the art. *Without that skill, the witness' opinions are neither relevant nor reliable.* The opinions would not be based on any specialized knowledge, training, or experience that would be helpful to the factfinder. In fact, "[a]dmitting testimony from a person ... with no skill in the pertinent art serves only to cause mischief and confuse the factfinder." *Sundance*[*, Inc. v. DeMonte Fabricating Ltd.*], 550 F.3d [1356,] 1362 [(Fed. Cir. 2008)]. That testimony would "amount[ ] to nothing more than advocacy from the witness stand." *Id.* at 1364–65.

Kyocera Senco Indus. Tools Inc. v. Int'l Trade Comm'n, 22 F.4th 1369, 1376–78 (Fed. Cir. 2022) (emphasis, and bracketed case citation material, added) ("The level of ordinary skill in the art, adopted during claim construction, requires experience in power nailer design. And Dr. Pratt lacks such experience. … Accordingly, the ALJ abused his discretion by admitting Dr. Pratt's testimony on any issue that is analyzed through the lens of an ordinarily skilled artisan.").

Dr. Cameron's opinion testimony should therefore be accorded little weight, if any at all. The resulting evidentiary imbalance in Shoals' favor is more than adequate to meet the required preponderance standard on the issue of infringement.

C. Voltage did not prove that AD LYNX satisfies the *Milk* factors.

Shoals does not dispute that the AD LYNX is within the scope of the investigation and therefore subject to any remedial orders that issue. But Voltage has not met its burden for adjudication of the LYNX as to the remaining three *Milk* factors. *Certain Human Milk Oligosaccharides and Methods of Producing the Same*, Inv. No. 337-TA-1120, Comm'n Op. at 18, 2020 WL 3073788, at *9 (June 8, 2020). Voltage relies on design drawings, documentation, and physical samples to show that the AD LYNX was "sufficiently disclosed" and is

[redacted]

"sufficiently fixed." RPost-HB at 60, 65, 71. [redacted] *See* CPost-HB at 65–69; JX-0156C; *compare* CPX-0033C (depicted on CDX-0005C.111), CPX-0032C (depicted on CDX-0004C.110), and CPX-0012C (depicted on CDX-0005.112–113). [redacted] RPost-HB at 70. [redacted] In *Certain Flocked Swabs, Prod. Containing Flocked Swabs, & Methods of Using Same*, the complainant alleged that the redesign was not sufficiently fixed because the respondent "may ultimately use a different redesign product." Inv. No. 337-TA-1279, FID, 2022 WL 18141793 at *24 (Oct. 28, 2022). [redacted] *Certain Elec. Connectors & Cages, Components Thereof, & Prod. Containing the Same* concluded that the design must be sufficiently fixed because complainant's expert was able to determine that the redesign products were "identical in all respects material to determining whether they infringe." Inv. No. 337-TA-1241, FID, 2022 WL 1124999 at *26 (Mar. 11, 2022) ("*Connectors and Cages*"). Again, that is not the case here. In *Certain Mobile Devices with Multifunction Emulators*, the ALJ considered whether the redesign product was sufficiently fixed when the design "did not seem to be commercially feasible" and respondent had not completed "testing necessary to be released to the market." Inv. No. 337-TA-1170, ID, EDIS DOCID No.

738549 at (Mar. 16, 2021) ("*Multifunction Emulators*"). Here, Shoals' argument does not depend on commercial feasibility or testing. Finally, in *Certain Elec. Devices, Including Streaming Players, Televisions, Set Top Boxes, Remote Controllers, & Components Thereof,* Inv. No. 337-TA-1200, ID, 2021 WL 3185836 at *62 (July 9, 2021) ("*Streaming Players*") ("And [respondent] submits that whether the [documentation] is accurate is not relevant to the inquiry."). Unlike *Streaming Players,* Thus, Voltage's cases are distinguishable.

[15] Voltage relies on Dr. Cameron's testimony that she had scanned RPost-HB at 87. But on cross-examination, Dr. Cameron testified Tr. (Cameron) at 1110:3–5, 1110:12–15, 1123:12–18. T

CPX-0012C (including enlargements as depicted on CDX-0005.113).[16]

RPost-HB at 69 (excerpt of RDX-0002.66 depicting RPX-0004.3C) (Tr. (Brooks) at 407:7–13.

[16] Tr. (Brooks) at 453:9–18, 453:21–454:1, 565:23–566:7.

See Tr. Cameron at 1111:17–19 ( ). T

RPost-HB at 65.

See RPost-HB at 65–68; Tr. (Cameron) at 1112:17–1113:23 (Tr. (Cameron) at 1112:21–1113:20. *See* CPost-HB at 65–69; JX-0156C; *compare* CPX-0033C (depicted on CDX-

[17] .

0005C.111), CPX-0032C (depicted on CDX-0004C.110), and CPX-0012C (depicted on CDX-0005.112–113).

See RPost-HB at 64–71. (*see* CPost-HB at 69–72), and Tr. (Ge) at 937:21–24 ("Q. Voltage has not met its burden for adjudication.

D. AD LYNX infringes, in any event.

CPost-HB at 72–74.

[18] JX-0154C at 11.

[redacted]

Voltage also argues for the first time in its initial brief that "fully encased" means "closely wrapped," RPost-HB at 88, with no support other than Dr. Cameron's equally unsupported utterance of it at the hearing. This is another position not preserved in the prehearing brief and should be discounted as such (G.R. 9.2 and 13.1), and because it is completely unexplained. Moreover, the "closely wrapped" interpretation is different from both what Voltage proposed before the *Markman* hearing (*see* JPCC (EDIS DOCID No. 807044)) and with the definition spontaneously proposed by Voltage at the *Markman* hearing: "[t]o encase something is to cover it or close it off, as if you were putting it in a shell, a coating, or a box." JX-0298 (*Markman* Tr.) at 139:13–140:2 (Respondents *Markman* Ex. 19, served via email to the Judge by Voltage on Dec. 13, 2023). Putting something in a shell or a box is not to "closely wrap" it, [redacted]

[redacted]

Another new argument not found in the prehearing briefs is [redacted][19] G.R. 9.2 and 13.1. [redacted] Order No. 16 at 37. [redacted] JX-0154C at 0011.

Voltage also argues that there is no evidence to support a finding that the outer mold includes all the apertures required by the claims. The evidence is no different than for the non-AD LYNX. The aperture that follows the feeder cable extends completely through the mold because the feeder cable so extends, and the apertures that follow the drop lines extend only partially because the drop lines end at or in the nexus and never emerge from opposite side of the mold. This is clear from the evidence of record regarding drop lines and feeder cables.

V. TECHNICAL DOMESTIC INDUSTRY

A. Shoals' technical DI showing is fully representative.

Voltage and Staff do not say much about the representativeness of Shoals' technical DI evidence that is not already addressed in Shoals' initial brief. CPost-HB at 83–94. The evidence shows that Shoals' BLA products are large custom-built assemblies that, although they have

[19] This position is also unsupported by Ms. Ge's prehearing deposition testimony. JX-0205C (Ge) at 168:6–12 ([redacted]).

[redacted]

multiple mold drops joined together along a feeder cable, are just one product as far as the claim language is concerned. The only exception, since the claims require at least one mold drop with at least two drop lines, would be a BLA having nothing but mold drops having just one drop line, but a product like that would run counter to the point of the BLA, because "you want to get a one-to-many aspect. So you want to get as many drops going into the BLA mold as possible, and that way you have a better value proposition." Tr. (Tolnar) at 338:9–12; *see also* Tr. (Tolnar) at 275:7–13. There is no evidence that any such product was ever sold with the *possible* exception of a single transaction that involved two BLAs sold for a combined total of $2,600. Tr. (Bardos) at 742:11–744:9. Otherwise, as Mr. Brooks testified, "we could literally have a BLA that was a mile long that had three thousand single drops on it, and that end drop on it, if it had a single two-drop mold on it, it meets the requirement of the patent." Tr. (Brooks) at 516:23–517:3. Every BLA is thus representative of every other BLA in that all practice at least claims 1 and 21 of the '153 patent.

The evidence also shows that Shoals, like Voltage, uses a very small number of dies to make mold drop configurations having from 1 to 8 drop lines, and that they do not differ from one another internally. Tr. (Macias) at 126:23–127:15; Tr. (Tolnar) 231:23–233:17; JX-0119C. This evidence, combined with the rest recounted in Shoals' initial brief, make it more likely than not that any given BLA mold drop having at least two drop lines is representative of all other such BLA mold drops. This is especially true where, as here, there is no evidence to suggest that the cable size or number of drop lines (beyond two) creates any meaningful variation among the mold drops, such that any would fall outside the scope of representativeness. *See, e.g., Certain Gas Spring Nailer Prod. & Components Thereof*, Inv. No. 337-TA-1082, USITC Pub. No. 5075, Comm'n Det., 2020 WL 8641615 at *96–97 (June 1, 2020) (finding burden satisfied when

[redacted]

"Respondent does not assert that the NT1850DE product is not actually representative of the NT1865DM, NT1865DMA, NR1890DC, and NR1890DR products, nor does it present any such evidence. It only argues that Complainant has not met its burden of showing representativeness.").

The cases Voltage and Staff cite are distinguishable. Some involve fact situations not present here. In *Certain Replacement Auto. Lamps II*, for instance, the complainant conflated DI with infringement by "point[ing] to evidence that representative *accused* products are copies of Hyundai's representative *domestic industry* products." *Certain Replacement Auto. Lamps II*, Inv. No. 337-TA-1292, ID, 2023 WL 1794924 at *46 (Jan. 24, 2023) ("*Auto Lamps II*") (emphasis in original). The ALJ found that effort wanting: "The fact that certain accused products resemble Hyundai's illustrated domestic industry products does not persuasively speak to whether other Hyundai products—represented only by part number lists in the record—look like the domestic industry products Hyundai proved up." *Id*. There is no such conflation in the present case.

Other cited cases are distinguishable because they involve a large volume of unanalyzed model numbers and profound failures to connect the dots among them. In *Lighting Devices*, cited by Staff, the complainant "failed to show that their infringement analysis for the twelve Representative Products should apply to the 229 Represented Products," failed to provide any "reason or supporting evidence for finding representativeness," and failed to confront evidence from the respondents' expert "that persuasively shows that [complainants' expert's] analysis is not sufficient." *Lighting Devices*, Comm'n Op., 2019 WL 7423547 at *9 (July 23, 2019). The complainant also "failed to show that its infringement analysis for the eight Representative Products should apply to the 34 Represented Products," failed to provide any "reason or supporting evidence for finding representativeness," and failed to respond to the respondents'

[redacted]

expert testimony on the subject. *Id.* at *10. Here, one BLA mold drop is offered as representative of a small number of others, with evidence that all have the same internal structure relevant to the claims, and no contrary evidence has been adduced.

An earlier initial determination in *Lighting Devices* involving a different patent is more relevant and instructive. The ALJ found expert infringement analysis of two model numbers to be sufficiently representative of infringement by eight other model numbers that the expert did not analyze, because "[a]lthough [the expert's] representativeness analysis is not detailed, he does identify the evidence that he relied on to support his conclusion," and "[t]o the extent that [the respondent] wanted to test [the expert's] conclusion concerning representativeness, it had the opportunity to cross-examine him at the hearing." *Lighting Devices*, ID, 2018 WL 7350925 at *44 (Dec. 19, 2018), *review denied*, 2019 WL 1616251 at *3 (April 12, 2019). Even more notable for the present case, however, is the ALJ's treatment of the technical DI representativeness issue. Like Shoals in this case, the complainant relied on *party fact witness* testimony to establish representative technical DI as to 159 model numbers on the basis of analysis of a single representative model number. *Id.* at *44–45.[20] The ALJ found the evidence sufficient to meet the preponderance of the evidence standard because the testimony was unrebutted and differences among the model numbers were not shown to be material. *Id.* at *45. In similar circumstances, the Federal Circuit has held that "[r]ather than improper burden shifting, the ALJ properly found that [the respondents] simply failed to rebut the substantial evidence set forth by [the complainant]." *Spansion, Inc. v. Int'l Trade Comm'n*, 629 F.3d 1331, 1351 (Fed. Cir. 2010).

[20] The 159 figure is found in Order 55 from the same investigation, which Staff also cites, denying early summary determination on the same issue. *Lighting Devices*, Order No. 55 at 18, 2018 WL 4241907 at *10–13 (Aug. 18, 2018).

[redacted]

B. Shoals' BLA practices claims 1 and 21.

Voltage and Staff's attempted rebuttal of Shoals' technical DI evidence is *completely* dependent on the notion that a single wire defines only one aperture, even if it forms two separate drop lines. That theory is not supported by the facts and evidence presented at the hearing and fails for all the reasons discussed above. The analysis that Shoals presented in its initial brief, applying the proper construction of "aperture" and POSA understanding of "drop line," and the other arguments presented above, completely refute Voltage and Staff's contention that the Shoals BLA does not practice claims 1 or 21. CPost-HB at 74–83.

VI. VALIDITY

A. Dr. Kenny's testimony should be disregarded because the *Markman* Order gives a correct definition of skill in the art, which Dr. Kenny does not satisfy.

Issues of infringement and validity are analyzed in great part from the perspective of a person of ordinary skill in the art, and testimony explaining the technical evidence from that perspective may legitimately aid the factfinder. *Sundance, Inc. v. DeMonte Fabricating Ltd.*, 550 F.3d 1356, 1361 (Fed. Cir. 2008). To offer such testimony, an expert must have at least the level of ordinary skill in the art; otherwise, the offered opinions are "neither relevant nor reliable." *Kyocera Senco*, 22 F.4th at 1376–77 (reversing ALJ's admission of testimony from a putative expert who lacked experience required for the level of ordinary skill adopted at claim construction). Testimony from a person "with no skill in the pertinent art serves only to cause mischief and confuse the factfinder"; thus, "a witness not qualified in the pertinent art may not testify as an expert on obviousness, or any of the underlying technical questions, such as the nature of the claimed invention, the scope and content of prior art, the differences between the claimed invention and the prior art, or the motivation … to combine." *Sundance, Inc.*, 550 F.3d at 1362–64. Here, Voltage's expert, Dr. Kenny, admittedly lacks experience in photovoltaic

[redacted]

systems and their electrical wiring and thus cannot offer relevant or reliable testimony on the validity of the ’153 patent.

1. Voltage’s definition of a POSA is inadequate.

The *Markman* Order defines a POSA as someone with:

> at least a bachelor’s degree in mechanical or electrical engineering or a related scientific field and ***at least two years experience with photovoltaic systems and electrical wiring***, with recognition that more education could substitute for experience and that experience combined with training could substitute for formal education.

Order No. 16 at 12 (emphasis added). According to Voltage, Shoals is offering a different, narrower definition that would require “experience in … ‘*utility-scale* photovoltaic EBOS.’” RPost-HB at 25 (italics added). Not so. Shoals has adopted the *Markman* Order’s POSA definition and did not argue otherwise during the hearing. CPost-HB at 96–97.[21]

It is Voltage that proposes a new definition for a POSA, one that eliminates “photovoltaic systems” altogether. RPost-HB at 24 (“the relevant requisite subject matter experience … is in electrical wiring and connectors.”). Voltage has to challenge the requirement that a POSA has training in PV systems because Dr. Kenny, by his own admission, does not. *See, e.g.*, Tr. (Kenny) at 1187:1–11, 1221:3–19, 1226:8–1229:22, 1228:20–1229:2. To compensate for Dr. Kenny’s lack of relevant expertise, Voltage broadly (and implausibly) argues that Dr. Kenny is qualified to opine as a POSA because he has a Ph.D. in physics and is therefore qualified to opine on anything that involves physics. *See, e.g.*, RPost-HB at 24 n. 1, 25. Voltage’s argument not only lacks credibility, but also improperly excludes an entire category of relevant art (photovoltaic systems) in defining a POSA. *Mintz v. Dietz & Watson, Inc.*, 679 F.3d 1372, at

[21] Staff likewise uses the Judge’s definition of a POSA in its analysis and supports the idea that photovoltaic systems and electrical wiring are “pertinent arts” to the ’153 Patent. SPost-HB at 56.

[redacted]

1372–76 (Fed. Cir. 2012). In *Mintz*, the Federal Circuit reversed a district court's definition of a POSA requiring "familiarity with the knitting art but no familiarity with the meat encasing art" because, *inter alia*, the patent specification and claims focused on meat packing as well as the knitting structure into which the meat was packed, reasoning that "[w]ithout some understanding of meat and meat encasement technology . . .a [POSA] would not grasp many aspects of the invention." *Id.*

Here, the *Markman* Order's definition correctly requires photovoltaic training. The prior art, the problems giving rise to the invention of the '153 patent, and the invention itself explicitly feature photovoltaic installations and wiring. The patent's title, the summary of disclosed embodiments and the specification all define the inventive concept as a "lead assembly" that facilitates connection of "solar arrays" to a "feeder cable [that is] connected to an inverter." JX-0089, 1:20–24, 55–60, 63-66; *see also* Tr. (Weiner) at 1285:8–10 ("the '153 patent is focused on how to get power from solar panel arrays … to an inverter without using a combiner box."). All the patent claims are directed to a lead assembly *in a solar installation* or *solar power system*, involving *solar wire harnesses*, *solar panels*, *solar arrays*—all arranged to address the specific problem of eliminating a *solar* combiner box. *Id.*; *see also* JX-0089 at 6:50-9:4. Just like the meat encasing technology was relevant for a POSA to understand the invention in *Mintz*, the electrical wiring technology as it relates to photovoltaic systems is relevant for a POSA to understand the key aspects of the invention, the nature of the problem addressed, and the prior art here. Therefore, like *Mintz*, it would be improper to omit an entire category of relevant art (*i.e.*, photovoltaic systems) in defining the art with which a POSA must be familiar. *See also, e.g.*, *Armament Sys. & Procs., Inc. v. Monadnock Lifetime Prods., Inc.*, 168 F.3d 1319, 1998 WL 537746 at *6 (Fed. Cir. 1998) (unpublished) (for a patent on expandable police batons, the

[redacted]

pertinent field for a POSA was baton-making, not metallurgy); *Brand Mgmt., Inc. v. Menard, Inc.*, 135 F.3d 776, 1998 WL 15241 at *9 (Fed. Cir. 1998) (unpublished), (for patent on a raised deck having pier blocks, vertical posts and deck surface members, a POSA would have had several years experience building decks); *Monarch Knitting Mach. Corp. v. Sulzer Morat, GmbH*, 139 F.3d 877, 883 (Fed. Cir. 1998) (for patent covering metal needles for machines that knit yarn, a POSA was a mechanical engineer with working knowledge of knitting machinery and needle design).

2. Dr. Kenny does not meet the *Markman* Order's POSA standard.

Under the *Markman* Order, a POSA needs either: (1) at least two years experience with photovoltaic systems and electrical wiring, or (2) education *that may substitute* for that experience. *See* Order No. 16 at 12. Dr. Kenny's experience and education do not qualify him under either alternative, as established by testimony presented at the hearing and discussed in Shoals' initial post-hearing brief. CPost-HB at 96–100.

Voltage argues that Dr. Kenny's work experience qualifies him—including his research in semiconductor physics (RPost-HB at 24 n. 1), employment as a professor in mechanical engineering, teaching a course involving the construction of a robot, and 30 years of research on semiconductor devices. *Id.* at 25. None of these experiences relates to "photovoltaic systems and electrical wiring." Order No. 16 at 12. Shoals does not dispute that Dr. Kenny has impressive credentials, just that his credentials have little to do with "photovoltaic systems and electrical wiring." Tr. (Kenny) at 1221:3–19; 1226:8–1229:22; 1228:20–1229:2; *see also* CPost-HB at 96–100.

Voltage asserts that Shoals requires a POSA to have experience in *utility-scale* solar installations. That is both wrong, as noted above, and beside the point, because Dr. Kenny lacks

[redacted]

experience with solar installations ***at any scale***. *See, e.g.*, Tr. (Kenny) at 1228:20–1229:2.

Dr. Kenny also lacks any formal education that would substitute for his lack of practical experience. Two years of education cannot mean two years of education in *anything*. It has to be education relevant to PV systems and their electrical wiring, in order to substitute for the lack of experience. *See* Order No. 16 at 12. And Dr. Kenny admits that he has not had any such education. Tr. (Kenny) at 1229:14–16; 1221:3–19; *see also* CPost-HB at 98.

Voltage fundamentally misunderstands the nature and purpose of a POSA, when it argues that Dr. Kenny must be a POSA because he can *understand* the ’153 patent. *See, e.g.*, RPost-HB at 25. If merely being able to understand patent were the standard for qualifying as a POSA then every judge in a patent proceeding would have to be deemed a POSA because the judge is charged with understanding and applying the patent. Instead, the purpose of a POSA is to assist a judge in reaching that understanding—and to do so by drawing on technical knowledge, not by analyzing the prosecution history and specification of the patent. *Cf.* RPost-HB at 34 (“Voltage’s technical experts, Dr. Cameron and Dr. Kenny … offered opinions … at the evidentiary hearing based on their analysis of the intrinsic record”). *See, e.g., Kyocera Senco*, 22 F.4th at 1376–77; *Sundance, Inc.*, 550 F.3d at 1364. A POSA draws on and educates the trier based on knowledge of the industry and technological context in which the ’153 patent was written. *See, e.g., Phillips*, 415 F.3d at 1313; *Home Diagnostics, Inc.*, 381 F.3d at 1358; *Ferguson Beauregard/Logic Controls v. Mega Sys., LLC*, 350 F.3d 1327, 1338 (Fed. Cir. 2003). Shoals does not contend that Dr. Kenny is not intelligent enough to understand the ’153 patent, just that he is unable to assist the Judge in understanding the ’153 patent from the required perspective of a POSA. *See, e.g.*, Tr. (Kenny) at 1187:1–11, 1221:3–19, 1226:8–1229:22, 1228:20–1229:2; CPost-HB at 96–100.

[redacted]

Illustrating that Dr. Kenny's expertise is in the wrong field, when he "first visited Voltage … and was thinking of this patent, the word aperture … suggested an optical kind of sensibility. So started thinking about what that might mean as far as the ability to see through a structure." Tr. (Kenny) at 1192:16–23. Dr. Kenny's initial reaction was to draw on optics, from the perspective of a physicist—*not* to try to understand "aperture," as used in the '153 patent, from the perspective of one with solar industry experience. *See* CPost-HB at 98. Dr. Kenny also misunderstands basic industry terms used in the claims of the '153 patent and the cited art, including the distinction between a solar module, solar panel, and solar array. *See, e.g.*, Tr. (Kenny) at 1203:18–1204:6, 1212:15–1213:10 (describing the electrical connection of solar *modules* in Yamawaki as solar *panels* and further confusing the analysis by stating that the "wire harness captures current from the individual solar *cells* in a solar *array*."); *see also* Tr. (Weiner) at 1277:9–1278:7 (explaining Dr. Kenny's misinterpretation of Yamawaki). As Shoals' expert, Mr. Weiner, testified, each of those terms has a well-understood meaning in the solar industry that is adopted by the '153 patent. Tr. (Weiner) at 1264:6–17; 1265:1–3. Dr. Kenny repeatedly mixes the use and definition of "solar panels" and "solar arrays" in his explanation of the '153 patent and his proposed interpretation of the Yamawaki reference, as discussed in Section VI.B, *infra*. RPost-HB at 115–116. As such, the significance of, for example, the wire harnesses including branches "that each are configured to electrically connect to a separate solar *panel* contained in an *array* of a plurality of solar *panels*" (JX-00089, claim 1), is lost on Dr. Kenny and his analysis. In contrast, the distinction is not lost, but highlighted, by Mr. Weiner—who understands the industry problems, industry norms, differences in scale, differences in regulation, etc. that are associated with the grouping of outputs from solar panels versus the

[redacted]

consolidation of power from solar arrays by way of wire harnesses and a lead assembly. *See, e.g.*, Tr. (Weiner) at 1260:6–23, 1261:1–17, 1269:17–1271:18.

Dr. Kenny simply cannot provide the necessary and important perspective of a POSA, as required by relevant authority. At bottom, Dr. Kenny does not have the experience or education needed to assist the Judge in assessing the validity of the ’153 patent’s claims from the perspective of one skilled in photovoltaic systems and electrical wiring. Therefore, for the reasons set forth above and in Shoals’ prehearing brief, at the hearing, and in its initial post-hearing brief, Dr. Kenny’s testimony should not be relied upon as evidence of the perspective of a skilled artisan. CPost-HB at 96–100; Order No. 26 at 3.

3. Voltage’s argument that Mr. Weiner is not a POSA is meritless.

Voltage contends that Mr. Weiner should not be considered a POSA in this case for two reasons: (1) that Mr. Weiner’s education falls outside of the definition offered by the *Markman* Order; and (2) that Mr. Weiner “struggled” to answer Staff’s questions regarding SDX-0003 and Voltage’s questions about Dr. Cameron’s proposed construction of “aperture.” RPost-HB at 28. Mr. Weiner is, of course, more than qualified to act as a POSA in this case and his credentials and testimony bear that out.[22]

First, the *Markman* Order requires that a POSA have “at least a bachelor’s degree in mechanical or electrical engineering or a related scientific field.” Order No. 16 at 12. Mr. Weiner has a bachelor’s degree in astrophysics, astronomy, and a minor in physics. Tr. (Weiner) at 1257:17–19. Considering that astrophysics is a hard science that employs principles of physics

[22] Notably, prior to its post-hearing brief, Voltage *never* raised this objection (*see* RPre-HB at §§ III.A.1 and IV.A.1. (level of ordinary skill); G.R. 9.2 and 13.1), and Staff does not object to Mr. Weiner’s admission as a POSA in this case. In fact, Voltage raised no objection to Shoals’ proffer of Mr. Weiner as an expert in “photovoltaic systems, EBOS, and the electrical wiring for solar systems” at the hearing. Tr. (Weiner) at 1262:19–21.

[redacted]

and chemistry in the study of stars and celestial bodies (*e.g.*, the Sun), Mr. Weiner's education fits directly in "a related scientific field" as required by the *Markman* Order. Further, Mr. Weiner has had *20 years* of experience in designing and deploying thousands of solar installations which far exceeds the "at least two years experience with photovoltaic systems and electrical wiring" required by the *Markman* Order.[23] Therefore, Mr. Weiner's education and experience qualify him as a POSA under the definition provided in the *Markman* Order.

Second, Mr. Weiner's purported "struggles"[24] stem from his discomfort with vague questions posed by Voltage and Staff, not any misunderstanding of the subject matter. For example, when asked to "imagine an undermold," when no undermold was depicted in the figure shown, and to describe the aperture corresponding to the imaginary undermold, Mr. Weiner understandably hesitated to provide a description. Tr. (Weiner) at 1317:19–1318:3. Nonetheless, Mr. Weiner described apertures as "pathways in a mold" and further that "the drop line aperture, either the second or the third, depending on which one we're looking at, it would extend from the nexus to the edge of the undermold" consistent with Mr. Brooks' testimony. *See* Tr. (Weiner) at 1317:21–1318:3 (regarding Figure 35). Mr. Weiner's testimony was clear, on point, and responsive to the questions asked—to the extent that sense could be made of those questions. *See* Tr. (Weiner) at 1315:4–1318:15.

Continuing this sideshow, Voltage cites Mr. Weiner's alleged struggle to "explain

---

[23] Mr. Weiner's experience, education, and testimony stand in stark contrast to Dr. Kenny, who does not have *any* experience or education related to solar installations. *See, e.g.*, CPost-HB at 96–100.

[24] Voltage fails to identify where Mr. Weiner allegedly "struggles" or what that "struggle" might suggest. Instead, Voltage merely implies that Mr. Weiner's alleged struggle is disqualifying for his testimony as a POSA by stating that the struggle is "illuminating as to his qualifications to offer opinions from the perspective of a POSA." RPost-HB at 28.

[redacted]

whether he agreed with Dr. Cameron's interpretation of 'aperture.'" RPost-HB at 28. Again, Mr. Weiner's testimony speaks for itself. Tr. (Weiner) at 1303:8–1314:21. When first presented with Dr. Cameron's testimony on the ELMO display and asked whether he agreed with Dr. Cameron's (incorrect) restatement of the construction of "aperture," Mr. Weiner carefully compared his own copy of the *Markman* Order from his witness binder with the displayed testimony of Dr. Cameron and deduced that Dr. Cameron's definition looked "kind of consistent to the Markman Order … Except … the only problem I have with her comment, though, is that she – she uses 'cable' instead – yeah she keeps using 'cable' when she should be using 'feeder cable or drop line.'" Tr. (Weiner) at 1304:3–11. When asked again, he discerned that "down at the bottom [of Dr. Cameron's paragraph] where she says, 'when the entire cable has been removed,' I would put feeder cable or drop line." *Id.* at 1304:12–25. Refusing to agree that Dr. Cameron's *revision* of the *Markman* Order is the same as the *Markman* Order, despite being asked to do so again and again, is evidence of acuity, not incompetence.

Voltage used its remaining time to repeatedly ask the same question, obviously hoping to elicit a different answer. *See, e.g.*, Tr. (Mr. Ou questioning Mr. Weiner) 1306:1–5, 1306:11–13, 15–16, 1307:12–16, 21–24. During that questioning, Voltage suggested that Dr. Cameron's construction of "aperture" was faithful to the Judge's claim construction (which it is not), again to sow confusion and to elicit a different answer from Mr. Weiner. *See, e.g.*, Tr. (Weiner) at 1312:12–15 (Mr. Ou: "Dr. Cameron tried to *clarify* the Court's construction … I'm trying to understand whether or not you agree with it or not.") (emphasis added). Mr. Weiner's refusal to be cowed or drawn in by an obtuse and misleading line of questioning is not "confusion."

Voltage's suggestion that Mr. Weiner is not a POSA is without merit. Indeed, if Mr. Weiner, the founder, president, and CEO of a solar engineering firm with 20 years of experience

[redacted]

in the engineering and design of solar installations (Tr. (Weiner) at 1257:7–1262:18) is not a POSA in "photovoltaic systems and electrical wiring," who is?

B. The '153 patent is not obvious in view of Yamawaki and Shao.

Because patents are presumed valid, 35 U.S.C. § 282, a challenger must prove invalidity by clear and convincing evidence. *Guangdong Alison Hi-Tech Co. v. Int'l Trade Comm'n,* 936 F.3d 1353, 1359 (Fed. Cir. 2019) (citing *One-E-Way, Inc. v. Int'l Trade Comm'n,* 859 F.3d 1059, 1062 (Fed. Cir. 2017)). Voltage does not acknowledge, nor has it adequately carried, its burden of proving the invalidity of the '153 patent by clear and convincing evidence. Voltage does not, especially by clear and convincing evidence: (1) establish Shao as analogous art, (2) show a viable reason or motivation to combine Yamawaki with Shao, or (3) establish that Yamawaki teaches required claim terms.

1. Voltage does not establish Shao as analogous art.

The two criteria for determining whether a reference is analogous to the '153 patent are: "(1) whether the art is from the same field of endeavor, regardless of the problem addressed, and (2) if the reference is not within the field of the inventor's endeavor, whether the reference still is reasonably pertinent to the particular problem with which the inventor is involved." *In re Clay*, 966 F.2d 656, 658–59 (Fed. Cir. 1992).

Shao does not qualify as analogous art because it is not in the same field of endeavor as the '153 patent, as discussed at length in Shoals' initial post-hearing brief. *See* CPost-HB at 101–103. Voltage, in its initial post-hearing brief, agrees that "[t]he '153 patent relates to 'electrical components, and more specifically to assemblies *for connecting solar panel arrays to an inverter, without the need of a combiner box*' . . . The essence of the invention is to provide electrical components, cable junctions, and lead assemblies *which can 'combine the power from*

[redacted]

solar arrays 32 and deliver [the power] to inverter 38.'" RPost-HB at 108 (emphasis added). Voltage's expert, Dr. Kenny concurs. *See, e.g.*, Tr. (Kenny) at 1230:1–24 (in response to the question "Can you tell me what the technological field is relevant to the '254 Patent and the '153 patent?" Dr. Kenny stated that the relevant field is "methods and apparatus for a lead assembly for use in a solar energy installation").

Notwithstanding those admissions, Voltage now purports to argue that the '153 patent and Shao are in the same field of endeavor because the relevant field is "structure used to distribute current." RPost-HB at 109. But the '153 patent is about *consolidating* power, not distributing it. Further, Voltage gives no weight to the acknowledged relevance of "solar" to the field of endeavor, in Voltage's own descriptions of Shao. Voltage's only justification for this is a conclusory and inaccurate attorney argument that the electrical components, assemblies, etc. that combine and/or distribute current are "not necessarily unique to the assemblies for PV devices," and that the same type of structure for the lead assembly could be used in both DC and AC currents. RPost-HB at 109. But as Shoals' expert Mr. Weiner explained, a POSA would not look to an AC device and use it in a DC system because "DC is considered a heavy-duty rating" whereas "AC is a weaker rating." Tr. (Weiner) at 1284:7–22. He provided the example that "a fuse holder might be rated for 240 volts AC, but it will only be rated for 48 volts DC." *Id.* Thus, "you just would never, ever look to an AC device to integrate it into a DC assembly unless you were looking for trouble." *Id*. at 1284:20–22. Specifically, a POSA would not look to Shao, an AC device, to create a DC device, such as the "lead assembly for a solar energy installation" of the '153 patent. *See* JX-0089 at 6:50.

Voltage similarly does not articulate a *particular* problem that is shared between the '153 patent and Shao. As argued in Shoals' initial post-hearing brief, Voltage fails to even point to the

[redacted]

particular problem of the ’153 patent and Shao, much less prove by clear and convincing evidence that Shao is reasonably pertinent to the particular problem with which the inventor of the ’153 patent was involved. CPost-HB at 103–105; *see In re Clay*, 966 F.2d at 658–59. The considerations articulated in Shoals’ initial post-hearing brief remain the same in light of Voltage’s arguments in its initial post-hearing brief.

2. Voltage does not show a motivation to combine Yamawaki and Shao, with a reasonable expectation of success.

Voltage does not satisfy its burden to prove, by clear and convincing evidence, that a POSA would have been motivated to combine Yamawaki and Shao and have a reasonable expectation of success in doing so. Voltage alleges that Shao “comes from the same field of endeavor [as Yamawaki],” is directed to similar objects or benefits as Yamawaki, and “represents a choice among a finite number of identified, predictable solutions, where such a modification or substitution would have been both obvious to try and simple.[25]” RPost-HB at 110. Voltage’s first two arguments, that a POSA would have been motivated to combine Yamawaki and Shao based on the references being in the same field of endeavor and that the references are directed to similar objects or benefits, are too generic. They find no basis in law and are discussed at length in Shoals’ initial post hearing brief. CPost-HB at 107–110.

Voltage’s remaining argument, that a POSA would have been motivated to combine based on a theory that Shao represents a choice of a finite number of identified, predictable

[25] Notably, this is the first time an “obvious to try” motivation has been presented by Voltage as a motivation to combine Yamawaki with Shao. Voltage and Dr. Kenny did not present this motivation in Dr. Kenny’s expert report, in the prehearing brief, or at the hearing itself. *See* RPre-HB, § IV.H.4 (’153 validity based on Yamawaki and Shao). Separate and apart from the lack of factual support for the theory, the “obvious to try” motivation should be excluded from consideration simply based on Voltage’s untimely disclosure of its new legal theory. G.R. 9.2 and 13.1.

[redacted]

solutions and that the "modification or substitution would have been both obvious to try and simple," fails at least for the lack of evidence used to prove up the motivation. RPost-HB at 110. In order to prove that a modification or substitution would have been obvious to try, Voltage would need to show two things: "(1) a design or market need to solve a particular problem, *and* (2) that 'there are a finite number of identified, predictable solutions' that would lead to an expectation of success." *See, e.g.*, *Grunenthal GMBH v. Alkem Labs. Ltd.*, 919 F.3d 1333, 1345 (Fed. Cir. 2019) (citing *KSR Int'l Co. v. Teleflex Inc.*, 550 U.S. 398, 417 (2007) (emphasis added)). Voltage has not done either. Voltage does not present a design or market need to solve a particular problem nor has it identified *any* solutions, much less present any reasons why those solutions would have been predictable. Further, this argument was waived. *See* G.R. 9.2 and 13.1; RPre-HB, § IV.H.4 (Voltage's '153 invalidity arguments do not include an "obvious to try" motivation to combine Yamawaki with Shao).

Voltage vaguely argues that the examiner's combination of Yamawaki with Vander Ploog during prosecution somehow "corroborates the motivation to combine Yamawaki and Shao." RPost-HB at 111.[26] However, the examiner's combination of Yamawaki with Vander Ploog is not probative of a motivation to combine Yamawaki with Shao. Regardless of the examiner's treatment of Vander Ploog, Voltage's burden with Shao and Yamawaki remains the same, which is to prove by clear and convincing evidence that: (1) Shao is analogous art (*i.e.*, that Shao is either in the same field of endeavor of the '153 patent or that Shao is directed to the same particular problem to be solved by the inventor of the '153 patent, *see In re Clay*, 966 F.2d at 658–59), and (2) a POSA would have been motivated to combine Yamawaki with Shao, which

[26] This is yet another new argument, which was never presented in Voltage's prehearing brief, nor was the combination of Vander Ploog and Yamawaki ever asserted as a reason to modify Yamawaki with Shao. As such, the argument should be disregarded. G.R. 9.2 and 13.1.

[redacted]

is a question of fact. *See, e.g.*, *Ariosa Diagnostics v. Verinata Health, Inc.*, 805 F.3d 1359, 1364 (Fed. Cir. 2015); *Vizio, Inc. v. Int'l Trade Comm'n*, 605 F.3d 1330, 1343 (Fed. Cir. 2010). The examiner's combination of Yamawaki with Vander Ploog does nothing to prove either that Shao is analogous art or that a POSA would have been motivated to combine Yamawaki with Shao.

3. Voltage fundamentally misreads Yamawaki.

Voltage's expert, Dr. Kenny, misunderstands Yamawaki. This leads him to allege that Yamawaki teaches several claim elements that simply are not disclosed. Therefore, just as argued in Shoals' initial post-hearing brief, even if a POSA would have looked to Shao (they would not), and even if a POSA would have been motivated to combine Yamawaki with Shao (they would not), the combination would still not teach several elements in the claims.[27] The arguments in Shoals' initial post-hearing brief apply with equal force to the arguments presented by Voltage in its initial post hearing brief. *See* CPost-HB at 116–124. In response to additional arguments leveled in Voltage's initial post-hearing brief, Shoals reiterates that Yamawaki teaches a wire harness, not a lead assembly, and that Yamawaki does not teach a single trunk cable extending through the branch junction 33.

a. Yamawaki teaches a wire harness collecting outputs from solar panels, not solar arrays.

To begin, Voltage makes several arguments in its initial post-hearing brief to the effect that Yamawaki teaches a lead assembly connected to a central trunk of a wire harness, and that Shoals and Mr. Weiner are inconsistent in applying definitions. Not so.

[27] Staff agrees with Shoals that the combination of Yamawaki and Shao does not render the '153 Patent obvious. *See* SPost-HB at p. 63 ("Mr. Weiner effectively rebutted Dr. Kenny's testimony, and thus there is not clear and convincing evidence that the inventions of the Asserted Claims would have been rendered obvious by the combination of Yamawaki with Shao.").

[redacted]

To reiterate, solar *panels* are defined as groups of electrically connected solar *modules* and solar *arrays* are defined as groups of solar *panels*. *See* §VI.A, *supra*. Voltage asserts that Yamawaki teaches "a drop line terminating at a drop line connector and configured to connect with a central trunk of a wire harness, the wire harness having a plurality of branches that each are configured to electrically connect to a separate solar *panel* contained in an *array* of a plurality of solar *panels*." RPost-HB at 114–21 (emphasis added). In support, Voltage points to the following annotated figure:

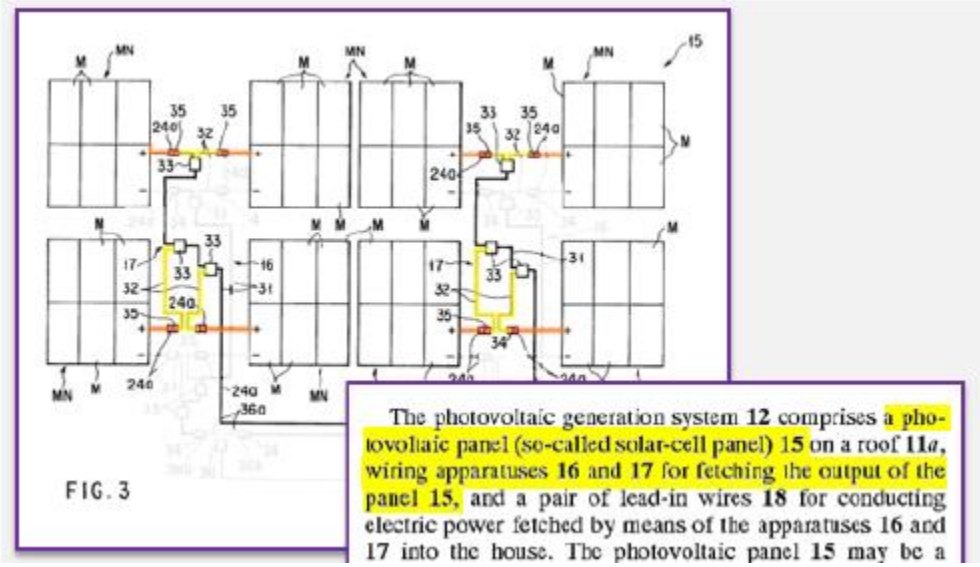

RDX-0003.0060 (displaying an annotated figure in RX-0052, Fig. 3). Voltage points to the orange cables as central trunks of individual wire harnesses and the yellow highlighted lines as drop lines connected to the orange wire harnesses. RPost-HB at 115. This illustrates a fundamental misunderstanding not only with terms relevant to the field of PV installations, but terms that are fundamental to the '153 patent itself.

As an example, Voltage claims that "Yamawaki clearly describes a wire harness [orange cables] that captures current from individual solar *cells* in a solar *array*." RPost-HB at 115 (quoting Tr. (Kenny) at 1203:18–1204:6). However, the orange cabling instead represents

[redacted]

individual outputs of solar *panels*, the solar *panels* made up of a group of solar *modules*, not solar *cells* in a solar *array*. Tr. (Weiner) at 1272:9–1273:13; *see also* RX-0052.023 (Yamawaki), at 7:64–67. As another example, Voltage states that the ’153 patent describes “multiple solar *panels* 30 in an *array* 32,” when a single *panel* is made of a group of solar *modules* 30.[28] Ironically, Voltage tries to justify its own misunderstandings and misstatements made by accusing Mr. Weiner of “overlook[ing] [the] definitions of lead assembly and wire harness.” RPost-HB at 116.

As required by the ’153 patent, a wire harness must include a plurality of branches each configured to connect to an individual solar *panel*. JX-0089, Claim 1. In contrast, the orange cables in the annotated Yamawaki Figure 3 above do not represent a wire harness as characterized by Voltage; they each represent an output from individual solar *panels* (each including six electrically connected solar *modules*) that in turn connects to a branch of the wire harness (highlighted in yellow in Voltage’s annotation). RDX-0003.0060 (displaying an annotated figure in RX-0052 (Yamawaki), Fig. 3). This corroborates Mr. Weiner’s testimony that Yamawaki teaches wire harnesses—*i.e.*, trunk and branch cables configured to group outputs from solar panels. Tr. (Weiner) at 1272:4–23. In contrast, Yamawaki does not teach a *lead assembly* which consolidates power from *wire harnesses* at a nexus encased by a mold. Tr. (Weiner) at 1277:11–1280:20 (emphasis added).

As Mr. Weiner noted, “Yamawaki only discloses a wire harness. So anything I do with Shao, I’m still working in the context of a wire harness, not a lead assembly.” *Id*. 1269:6–8.

[28] The loose nature with which Voltage treats claim terms that are commonly defined and understood by those in the field of solar installations points to Dr. Kenny not offering the proper perspective of one of ordinary skill. *See* § VI.A, *supra*.

[redacted]

b. Yamawaki does not teach a single trunk cable extending completely through the branch junction.

Voltage additionally argues that the trunk cable (denoted at 31) must be a single cable because it is described "in a singular form, as opposed to branch cables 32 in a plural form." RPost-HB at 120. To arrive at its conclusion, Voltage simply ignores the language in Yamawaki indicating that each portion of the trunk cable is *inserted* into the branch junction: "The trunk cable 31 is inserted in *each* of the trunk cable connecting portions *33a* and *33b*.[29]" RX-0052.024 (Yamawaki) at 10:27–30. Voltage still has not explained how the trunk cable can both be one continuous cable while also being "inserted in *each* of the trunk cable connecting portions 33a and 33b." *Id.* (emphasis added). The clear answer is that the trunk cable is made up of separate sections that together group power from individual solar panels collected by branch cables. *Id.*

Voltage argues that Yamawaki does not teach a field-adjustable wire harness, apparently in response to Mr. Weiner's testimony that Yamawaki contemplates assembling its wire harnesses on a roof. RPost-HB at 119. As discussed in Shoals' initial post-hearing brief, Yamawaki teaches a flexible, adjustable wire harness that can adapt to the unique characteristics inherent on rooftops. CPost-HB at 118–119; Tr. (Weiner) at 1270:18–1271:22. Voltage attempts to rebut Mr. Weiner's testimony (again, solely through attorney argument) by pointing to language in Yamawaki describing that "rough wiring work for the apparatuses 16 and 17 can be carried out before the module units MN are set on a roof or the like"—to suggest that Yamawaki does not contemplate assembly on a roof. RPost-HB at 119 (quoting RX-0052 (Yamawaki) at 12:20–22). But Voltage's suggestion based on a single sentence does not undermine the ample disclosures in Yamawaki, or Mr. Weiner's informed opinions on solar rooftop installations. *See*

[29]Voltage strategically omits this sentence but quotes the sentences in Yamawaki that immediately follows. *See* RPost-HB at 120.

[redacted]

CPost-HB at 117–120. Indeed, the sentence immediately following that quoted by Voltage discusses setting and connecting the apparatuses on the roof. RX-0052, at 12:22–25 ("When the module units MN are set on the roof or the like after the wiring work, the wiring apparatuses 16 and 17 can be connected to the module units MN."). Yamawaki further discloses inserting the trunk cables and branch cables into the branch junction 33 and thermowelding the connection points. *See* CPost-HB at 121–122. In contrast, Voltage's theory of Yamawaki would include pre-manufacturing each wire harness and branch junction, thereby eliminating the flexibility and customizable nature of the wire harness in Yamawaki. *See* Tr. (Weiner) at 1287:12–15; *see also* RX-0052.024 (Yamawaki) at 4:1–4.

Voltage has not borne its burden to prove invalidity by clear and convincing evidence. First, Voltage has not shown that Shao is analogous art; indeed, Shao is not in the same field of endeavor nor is Shao directed to the particular problem of the '153 patent. Second, even if Shao were analogous art (it isn't), Voltage has not shown, by clear and convincing evidence, that it would have been obvious to a skilled artisan to combine Yamawaki with Shao (it would not have been). Finally, even if were analogous art and even if Voltage has shown that a POSA would have been motivated to combine Yamawaki and Shao, Voltage misinterpreted Yamawaki and failed to show that Yamawaki teaches several claim elements (e.g., lead assembly, apertures, etc.). As such, Voltage has not borne its burden of proving by clear and convincing evidence that the claims of the '153 patent are rendered obvious by the combination of Yamawaki and Shao.

C. Shoals' proof of objective indicia of nonobviousness stands unrebutted.

Because Voltage did not address objective indicia of non-obviousness in its initial post-hearing brief (*see* RPost-HB, § V.5 ('153 patent validity) at 105–139, *generally*), Voltage has

[redacted]

waived any attendant arguments. G.R. 13.1.[30] Further, Staff agrees that the BLA has enjoyed at least some commercial success but does not address any other indicium. SPost-HB at 63–64. Accordingly, Shoals' unrebutted evidence of certain objective indicia (long-felt need, industry praise, industry skepticism, and commercial success), as well as the clear nexus between the objective indicia and the BLA, support a finding of non-obviousness.

D. Voltage has not shown indefiniteness.

See § III.A.3, *supra.*

VII. ECONOMIC DOMESTIC INDUSTRY

Shoals presented its economic DI case through its CFO, Mr. Bardos, and an expert, Mr. Nelson. Voltage's expert, Mr. Clarke, was careful to say that he had not "said or offered [the] opinion" that a domestic industry *does not* exist, and that he was only presenting commentary that "calls into question whether [Shoals] has been able to meet [its] burden" to prove economic DI. Tr. (Clarke) at 1020:8–14, 994:16–19. Staff, for its part, generally embraces Mr. Clarke. *See* SPost-HB at 66. Shoals largely anticipated and refuted each of Mr. Clarke's criticisms in its initial post-hearing brief. CPost-HB, §§ VIII.A–VIII.C. Below, Shoals responds to a few ancillary points raised by Voltage and Staff in their respective initial post-hearing briefs—which challenge certain details in Mr. Nelson's allocations but do not genuinely dispute Shoals' manufacturing presence in the United States.

[30] Although Ground Rule 13.2 permits the parties to discuss the issues and evidence raised in each opposing party's post-hearing briefs, it would be prejudicial for Voltage to provide no position in their initial post-hearing brief and save all arguments for their reply. In fairness, any such "rebuttal" arguments should be disregarded, but if the Judge decides to consider them, Shoals respectfully requests leave to file a sur-reply to address Voltage's delinquent arguments.

[redacted]

A. Shoals' domestic industry investments relate to patent-practicing products.

Voltage and Staff argue that Shoals' domestic investments are overstated because they cover non-practicing DI products, such as the hypothetical "one-drop BLA" and the EV-BLA; they further argue this problem is irremediable. RPost-HB at 143; SPost-HB at 69–70. But as Shoals showed at the evidentiary hearing and explained in its initial post-hearing brief, the "one-drop BLA" argument rests on confusion about what Shoals sells: Shoals sells BLAs, not individual mold drops; and if a *true* one-drop BLA—*i.e.*, a BLA that has only mold drops with only one drop line—ever were sold, it was in vanishingly small quantities. CPost-HB at 140–41. The EV-BLA, in turn, is indeed known to have been produced, but still not in more than *de minimis* quantity (*id.* at 140): approximately 1.3% of Shoals' total BLA production in 2022, and 0% in prior years. JX-0126C, "Summary" tab; Tr. (Bardos) at 677:25–678:6.[31]

Staff also alleges, for the first time and without evidence, that non-practicing products also include three, five, and seven drop line BLAs. SPost-HB at 65. Because Staff did not make this argument in its prehearing brief, it should be precluded from making it now. G.R. 9.2 and 13.1. Further, as shown above in connection with technical DI, so long as a BLA has at least one drop mold with at least the two drop lines required by the claims, the presence or absence of additional drop lines, in even or odd numbers, is irrelevant. *See* § V.A, *supra*.[32]

---

[31] Staff speculates that although EV-BLA sales are low now, they are "expected to be a segment of growth." SPost-HB at 70. Staff cites *no* evidence of this, and there is none. To the contrary, Mr. Bardos testified that Shoals "produced around 500" EV-BLAs. Tr. (Bardos) at 754:14. Through 2022, Shoals had already produced 455 units. *Id.* at 738:25–739:3. Apparently, instead of growing in 2023 and 2024, EV-BLA production it dropped off from *de minimis* to essentially nonexistent. Nor has Staff explained how possible EV-BLA growth in the future is relevant to existence of a domestic industry as of May 2023.

[32] Also, this argument again misses the point that Shoals does not sell individual BLA mold drops. Tr. (Bardos) at 658:9–10 ("Q. Okay. Does Shoals sell mold drops? A. No."); Tr. (Tolnar) at 316:21–23. The BLA includes mold drops with various numbers of drop lines, usually in a

[redacted]

Finally, Shoals' domestic investments relate to the BLA, generally, not to any particular configuration thereof. In *Certain Marine Sonar Imaging Devices, Including Downscan & Sidescan Devices, Prod. Containing the Same, & Components Thereof*, the Commission explained that evidence that the complainant's investment related to certain non-practicing products in addition to the domestic industry product did "not diminish [the fact] that [complainant's] investment is also with respect to the domestic-industry articles." Inv. No. 337-TA-921, Comm'n Op., 2016 WL 10987364 at *39 (Jan. 6, 2016) ("*Sonar Imaging*") (quoting *Certain Integrated Circuit Chips and Products Containing the Same*, Inv. 337-TA-859, Comm'n Op. at 48 (Aug. 11, 2014)). Like *Sonar Imaging*, even if Shoals' domestic investments also supported a few non-practicing BLA configurations, they should still be counted because the same plant, equipment, labor, and capital is used for the patent-practicing BLAs. Tr. (Macias) at 125:10–126:22 (same manufacturing equipment and process for BLA mold drops with different numbers of drop lines), 198:19–199:4, 205:2–5, 216:13–217:20; JX-0205C (Bardos) at 300:15–16 (same manufacturing equipment and process for the BLA and EV-BLA). Thus, arguments about a few allegedly non-practicing BLA configurations out of the tens of thousands of patent-practicing BLAs cannot diminish the amount or significance of Shoals' investments with respect to the practicing BLA. *Sonar Imaging*, 2016 WL 10987364 at *39; *see also Certain Integrated Cir. Telecomm. Chips & Prod. Containing Same Including Dialing Apparatus*, Inv. No. 337-TA-337, USITC Pub. No. 2670, 1993 WL 13033517 at *72 (June 22, 1993) ("The mere fact that the same plant, equipment and labor are used to produce several different products does not preclude a finding that a domestic industry exists.").

---

one-to-many configuration, distributed along a feeder cable that spans hundreds of feet. Tr. (Brooks) at 392:3–393:22, 394:17–395:15, 515:21–516:2, 516:15–517:3; Tr. (Tolnar) at 336:11–16, 337:9–20; Tr. (Bardos) at 753:21–754:5, 754:25–755:12, 799:1–5.

[redacted]

Voltage's reliance on *Certain Subsea Telecommunication Systems and Components Thereof*, is misplaced. Inv. No. 337-TA-1098, USITC Pub. No. 5022, 2020 WL 9312366 (Feb. 1, 2020) ("*Subsea"*). *Subsea* expressly recognized the holding in *Sonar Imaging* but found that the *Subsea* complainant "has not shown that investments related to other [non-practicing] products also relate to the [] systems that use the [practicing product]." *Id.* at *30. Thus, the holding in *Subsea* is inapposite since Shoals' domestic investments in the allegedly non-practicing BLAs undisputably (and directly) relate to the practicing BLAs. And Shoals has already excluded domestic investments for non-BLA products. Tr. (Bardos) at 665:21–666:6, 677:16–18 ("Q. Are the BLA machines used to manufacture any non-BLA products? A. No, they are not.").

The remaining cases relied upon by Voltage are also distinguishable, on the same ground. In *Certain Computer Forensic Devices & Prod. Containing the Same*, the ALJ found that the claimed domestic investments were overstated because they included investments in related products covered by different patents but "there is no overlap among the domestic industry products and patents," so allocation was necessary. Inv. No. 337-TA-799, ID, 2012 WL 5942392 at *8 (Oct. 26, 2012) ("*Forensic Devices*"). Similarly, in *Certain Dimmable Compact Fluorescent Lamps & Prod. Containing Same*, Inv. No. 337-TA-830, ID, 2013 WL 1491916 (Feb. 27, 2013) ("*Dimmable Lamps*") and *Auto Lamps II*, Inv. No. 337-TA-1292, Comm'n Op., 2024 WL 1298904 (Mar. 22, 2024), the ALJ similarly held that the complainant failed to allocate its domestic investments to each product covered by the various asserted patents. *Dimmable Lamps*, 2013 WL 1491916 at *43; *Auto Lamps II*, 2024 WL 1298904 at *16. Unlike *Forensic Devices*, *Dimmable Lamps*, and *Auto Lamps II*, Shoals' domestic BLA investments all relate to the '153 patent and products and are therefore properly included.

[redacted]

Voltage and Staff also try to exploit Mr. Tolnar's testimony that he "would imagine" that Shoals could "track the one BLAs that it sells over any given time period." *See* Tr. (Tolnar) at 341:7–9. But Mr. Tolnar does not have an accounting degree, is not responsible for and does not oversee Shoals' accounting, and is not an expert in economic domestic industry. *Id*. at 220:3–6, 219:24–220:2, 365:8–10. On the other hand, Shoals' CFO and economic DI corporate witness, Mr. Bardos, testified that there is no way to extract information from Shoals' accounting system regarding the characteristics of mold drops on a BLA for any given project.[33] Tr. (Bardos) at 670:8–24, 775:13–776:20, 742:20–24. Mr. Bardos further testified that the best deduction that he could make from the data in Shoals' accounting system is to calculate the average number of drop lines per entire BLA, but that number may be distributed across any number of mold drops along a BLA, each mold drop having any number of drop lines. *Id*. at 739:8–740:14 (regarding CX-0266C), 775:13–776:20; *see also* Tr. (Macias) at 120:5–7, 136:2–12 (BLA configurations vary because solutions are customized per project).

Finally, Voltage argues that Shoals should have reviewed and produced engineering design plans identifying the configuration of each mold drop for each of the thousands of BLAs for each solar installation that Shoals included in its domestic investments. RPost-HB at 144. Voltage cites no authority requiring Shoals to go to what Mr. Bardos testified would be extraordinary lengths. *See* Tr. (Bardos) at 744:10–20; *Certain Stringed Musical Instruments & Components Thereof*, Inv. No. 337-TA-586, Comm'n Op., 2008 WL 2139143 at *15 (May 16,

[33] Voltage, citing two decisions on impeachment, says "Mr. Bardos' testimony should be given no weight," to the extent it disagrees with Mr. Tolnar's. RPost-HB at 144 n. 11. Impeachment evidence is "[e]vidence used to undermine a witness's credibility." *Black's Law Dictionary* (11th ed. 2019). Voltage's authorities are inapposite because Mr. Bardos testified about independently relevant facts (i.e., facts relevant to issues other than Mr. Tolnar's credibility), known to him—not about Mr. Tolnar's credibility, or to undermine it.

[redacted]

2008) ("A precise accounting is not necessary, as most people do not document their daily affairs in contemplation of possible litigation.") ("*Stringed Instruments*"). The burden of such an arduous undertaking would far outweigh its probative value, given the uniform testimony of Shoals' witnesses that the fabled one-drop BLA, if it ever even existed, would comprise a minute portion of Shoals' overall BLA production. Tr. (Tolnar) at 274:25–275:6, 316:21–23, 337:21–338:19; Tr. (Bardos) at 804:22–805:6, 677:25–678:6; Tr. (Macias) at 128:6–12, 212:2–10. As Mr. Bardos testified, there have only been two instances where the number of BLAs matched the number of harnesses, which *may* indicate the production of "one-drop" BLAs (as characterized by Voltage and Staff), the first was a sample that generated no revenue; the second included two BLAs invoiced for $2,600. Tr. (Bardos) at 742:2–744:7. That is about 2/1000ths of a percent of Shoals' BLA sales from 2019 to 2022. *See* CPost-HB at 141. Even narrowing the focus to 2021, assuming the sale happened that year, it still amounts to about 8/1000ths of BLA sales (for 2021).[34] *See* JX-0126C ("Summary" and "Revenue Pivots" for S-BLA).

B. Shoals established a domestic industry as of and continuing into 2023.

Another of Mr. Clarke's "questions" focuses on the fact Shoals' detailed analysis did not cover domestic investments for the first few months of 2023.[35] But, as Voltage acknowledges, Mr. Bardos testified that Shoals did not have audited financials for 2023 at the time of the complaint. Tr. (Bardos) at 696:6–23. Further, Shoals produced financial reports and presentations documenting its growth and performance in 2023.[36] *See* CX-0261C; JX-0112; JX-

[34] $2,600 ÷ $34,0057,619 = 0.0076%. 2 ÷ 22,953 = 0.0087%.

[35] Notably, Respondents do not even argue that Shoals' domestic investments have ceased, or even declined.

[36] Shoals does not have any foreign manufacturing, offices, or employees. Tr. (Bardos) at 659:9–23.

[redacted]

0113. Mr. Bardos testified that the number of Shoals employees grew from 2022 to 2023, and Shoals continues to invest in additional manufacturing facilities in Tennessee. Tr. (Bardos) at 806:14–22, 650:22–651:5. This is probative. *See, e.g., Certain Automated Put Walls & Automated Storage & Retrieval Sys., Associated Vehicles, Associated Control Software, & Component Parts Thereof*, Inv. No. 337-TA-1293, Comm'n Op., 2023 WL 5426449 at *15 (Aug. 17, 2023) ("*Put Walls*") (including supplemental information of employee headcount and facility square footage to support existence of domestic industry as of date of complaint). As the Commission has explained, "there is no requirement that the investments relied upon to satisfy the domestic industry requirement must be incurred only at the time the complaint is filed, and not prior to that date." *Put Walls* at 26 n.23 (internal citations omitted) (disregarding respondents' argument that a three-month gap in data "dooms" complainant's DI showing and explaining that DI may be established "based on past significant or substantial investments relating to articles protected by the patent") As Shoals showed in its initial post-hearing brief: that Shoals did not include more detailed financial data for a few months immediately preceding the filing of its initial complaint is inconsequential, especially in the absence of any evidence of a significant intervening event,. *See* CPost-HB at 142.

C. Shoals' investments in plant and equipment are reliable and cognizable.

As a threshold issue, Voltage grossly mischaracterizes Shoals' plant and equipment allocation as based on the unverified evaluation of an unknown employee. RPost-HB at 148. But Mr. Bardos testified that: Shoals' facilities manager, Joe Sprouse (JX-0205C (Bardos) at 354:18–355:8), reviewed blueprints of Shoals' Plant 1 and Plant 4 facilities to identify the floor space dedicated to BLA production; Mr. Bardos (who regularly walks the manufacturing floor) reviewed the blueprints to confirm Mr. Sprouse's estimates; and Mr. Sprouse manually identified

the equipment dedicated to BLA production. Tr. (Bardos) at 699:8–700:8; JX-0205C (Bardos) at 354:18–355:8, 312:6–315:2 (referring to JX-0091C, "Expense Allocation Support" tab, row 31).

As Mr. Nelson testified, Shoals' plant and equipment allocation is based on the square footage allocation described by Mr. Bardos and Mr. Nelson's tour of Shoals' facilities. Tr. (Nelson) at 822:1–824:3. Shoals properly and reliably allocated plant and equipment related to the BLA. *See, e.g., Certain Computer Network Sec. Equip. & Sys., Related Software, Components Thereof, & Prod. Containing Same*, Inv. No. 337-TA-1314, ID, 2023 WL 574421 at *131 (Aug. 8, 2023) (recognizing that square footage, sales-based, and management-based allocations "are each considered to be acceptable allocation methods in Commission precedent"); *see also Certain Solid State Storage Drives, Stacked Elecs. Components, & Prod. Containing Same*, Inv. No. 337-TA-1097, Comm'n Op., 2018 WL 4300500 at *11–12 (June 29, 2018) ("*Solid State Storage*") (allocation of plant and equipment by square footage and "general recollection" to produce "good faith estimate" of how floorspace was used is an accepted allocation technique).

1. Shoals properly allocated square footage for "warehousing."

Voltage (and Staff) continues to argue that Shoals' investments in plant and equipment are overstated because Shoals included domestic investments for "warehousing and distribution" activities,[37] citing *Certain Artificial Eyelash Extension Sys., Prod., & Components Thereof*, Inv. No. 337-TA-1226, Comm'n Op., 2022 WL 15498309 (Oct. 24, 2022) ("*Artificial Eyelash*") and *Certain Bone Cements, Components Thereof & Prod. Containing the Same*, Inv. No. 337-TA-

[37] Shoals disputes that its pre-production and post-production staging constitutes mere "warehousing and distribution" activities (*see* CPost-HB at 142–144), but will accept this assumption for purposes of reply because, however Shoals' activities are viewed, they are cognizable domestic investments.

[redacted]

1153, Comm'n Op., 2021 WL 287860 (Jan. 25, 2021) ("*Bone Cements*"). RPost-HB at 146. As Shoals proved and trial and explained in its initial post-hearing brief, its pre-production and post-production staging areas are not for "warehousing *and distribution*"; that is a phrase Mr. Clarke came up with. Instead, they are essential investments for Shoals' 100% U.S. manufacturing. *See* CPost-HB at 142–144. That is one reason Voltage's authorities are inapposite.

Further, *Bone Cements* recognized that "discrediting 'mere importer' activities occurs where the asserted domestic industry lacks domestic manufacturing activity." 2021 WL 287860 at *11 n. 21. *Artificial Eyelash* excluded warehouse and distribution investments on the same basis. 2022 WL 15498309 at *34 (excluding "warehousing and distribution activities [that] involve simply 'select[ing] the items that are on order' and 'putting [them] in a box,'" where "no additional steps to make [the DI] products saleable" occur "in the United States"). Here, by contrast, it is undisputed that Shoals develops and manufactures the BLA *exclusively* in the United States. Tr. (Macias) at 105:2–107:2; Tr. (Tolnar) at 221:20–21, Tr. (Bardos) at 649:19–650:6. Indeed, *Artificial Eyelash* supports inclusion, not exclusion. 2022 WL 15498309 at *33 (recognizing that once a complainant is found to be more than a mere importer, activities are considered) (citing *Certain Percussive Massage Devices*, Inv. No. 337-TA-1206, Comm'n Op., 2022 WL 59156 at *7 (Jan. 4, 2022)).[38] *Certain Wet Dry Surface Cleaning Devices*, Inv. No. 337-TA-1304, ID, 2023 WL 2824398 (Mar. 24, 2023) is to the same effect:

> Although warehousing and distribution expenses have at times been excluded … where the sole activities of the complainant are those of a mere importer, that is not the case here. [Complainant's] investments in the Pharr facility have been made in conjunction with other domestic investments that

[38] *See also Artificial Eyelash*, 2022 WL 15498309 at *59 (regarding warehousing and distribution investments, "the statutory language of subsections (A) and (B) can include non-manufacturing activities and the Commission has counted such expenses in prior determinations. There is no statutory prohibition against inclusion of these types of expenses; rather, the key is whether the expenses properly fall within (A) or (B).").

[redacted]

> go well beyond a mere importer's activities; [complainant] has invested *** and employed scores of employees to conduct domestic research and development, manufacture related consumables domestically, and provide customer service domestically. I determine that, in this context, warehousing and distribution of the domestic industry products at the Pharr facility is part of the domestic industry.

2023 WL 2824398 at *156–157. Thus, Commission precedent supports inclusion of Shoals' staging areas, even under Mr. Clarke's misleading characterization of them.

2. Shoals properly included Plant 1 acquisition costs.

Voltage argues that Shoals overstates the purchase price of Plant 1 because Shoals did not use Plant 1 for BLA production until 7 years after purchase. RPost-HB at 151. However, the record reflects that all the space allocated to the BLA is necessary for BLA production, Mr. Nelson only allocated a portion of the purchase price for Plant 1 to the BLA, and there is no evidence that the value of Plant 1 has declined. *See* CPost-HB at 134–135. Although there may be precedent for using amortization and depreciation, there is no requirement that investment *must be* measured using those metrics, as opposed to acquisition cost. *See Certain Integrated Cirs. & Prod. Containing the Same*, Inv. No. 337-TA-1148, Ord. No. 38, 2019 WL 7288999 at *7 (Nov. 4, 2019) ("*Integrated Circuits*") ("I disagree that depreciation *must* be used as opposed to an up-front acquisition technique for purposes of section 337 domestic industry.") (emphasis in original). Shoals properly included an allocation of Plant 1 acquisition costs.

3. Shoals properly allocated facility expenses and factory supplies.

Voltage contests Shoals' inclusion of facility expenses and factory supplies as not having a direct bearing to BLA manufacture. RPost-HB at 152. But as recognized in *Certain Encapsulated Integrated Cir. Devices & Prod. Containing Same*, plant and equipment expenses may include overhead:

[redacted]

> However, no party has pointed to any law, and the undersigned does not know of any law, that requires the plant and equipment expenses incurred in the United States "with respect to the articles protected by the patent … concerned" to be of any particular kind or devoted to any particular function, be they administrative overhead or manufacturing expenses.

Inv. No. 337-TA-501, Comm'n Op., 2014 WL 12935964, at *14 (Apr. 28, 2014). Further, Mr. Bardos testified that the claimed factory supplies are used to support the BLA. Tr. (Bardos) at 675:16–22 (regarding supplies depicted on CDX-0004.14). Specifically, Mr. Bardos testified that, in addition to shipping supplies, pallets, shrink wrap, and cardboard boxes, factory supplies include lubrication for the machines and safety glasses and gloves, which directly relate to BLA production. *Id*. at 708:3–15; JX-0205C (Bardos) at 332:10–333:2. Mr. Bardos also testified that packaging materials, pallets, and shipping labels are necessary to get the BLA out the door. Tr. (Bardos) at 675:16–22. For example, shipping labels are used to identify the customer site and the block number to which the BLAs correspond, which is important because BLAs are custom built for each project to match the layout of the project site. *Id*. at 674:18–675:15 (regarding CDX-0004.14). In other words, the BLAs are not useable or saleable without the shipping labels. *Certain Male Prophylactic Devices*, Inv. No. 337-TA-546, Comm'n Op., 2007 WL 9772268 at *24–25 (Aug. 1, 2007) ("Prior investigations instruct that if the product is not saleable without the domestic activities, this factor supports finding a domestic industry.").

D. Shoals properly allocated its domestic investments in labor and capital.

1. Shoals' research and development investments are sufficiently reliable.

Voltage argues that Shoals' R&D labor investments are overstated because they are based on employee time estimates. RPost-HB at 153. But the Commission has found labor allocations based on employee time estimates reliable when, as here, the estimates were performed by knowledgeable employees. *See, e.g., Certain Elec. Devices with Image Processing Sys.*, Inv. No.

[redacted]

337-TA-724, Order No. 29, ID, 2011 WL 1336531, at *8 n.23 (Mar. 11, 2011) (accepting allocation based on estimates from source who "knows everyone's workload and the percentage that should be allocated to each category"), *unreviewed by* Notice, 2011 WL 13247782 (April 12, 2011); *see also* Tr. (Bardos) at 732:7–733:1 (discussing allocation methodology for JX-0133C, "RD-EN Summary w %" tab); JX-0205C (Bardos) at 345:19–346:17. Voltage also challenges Shoals' allocations as not based on documents. Shoals does not maintain engineering logs, so there is no documentation to rely upon. JX-0205C (Bardos) at 347:10–17. However, "there is no Commission requirement that sworn witness testimony directed to the domestic industry requirement cannot be credited without further corroboration by underlying documentation." *Solid State Storage*, Inv. No. 337-TA-1097, Comm'n Op. at 20-22 (June 29, 2018); *accord Certain Raised Garden Beds & Components Thereof*, Inv. No. 337-TA-1334, Comm'n Op., 2024 WL 1434222 at *24 (Apr. 1, 2024).

Voltage also alleges inconsistencies in Shoals' R&D estimates. RPost-HB at 154. Specifically, Voltage observes that Kenneth Gentry and Michael Newman were designated as "out" and Mickey King was designated as "in" but each were assigned 100% time estimates. *Id*. Messrs. Gentry, Newman, and King are product designers (JX-0133C, "RD_EN Summary w %" tab), and Voltage does not seem to argue they should not have been included. Instead, Voltage complains only of what it perceives as an inconsistency in how they are tagged in a particular spreadsheet. That is something Voltage could and should have asked Mr. Bardos about, in deposition or at the hearing. Its tactical decision to refrain is not grounds for excluding an entire category of investments. *See also Stringed Instruments*, 2008 WL 2139143 at *15 ("A precise accounting is not necessary, as most people do not document their daily affairs in contemplation of possible litigation.").

[redacted]

Next, Voltage asserts that Shoals' R&D allocations should be disregarded because Mr. Nelson applied a consistent allocation to the BLA between 2019 and 2022. RPost-HB at 156. But as Mr. Bardos testified, individual employees estimated the time they spent on R&D for the BLA each year, then Shoals applied a percentage allocation based on the amount of time the engineering team, as a group, spent on BLA R&D each year (Tr. (Bardos) at 734:1–735:9); thus there was variation at both levels. *See* JX-0133C, "EN_RD Wages Expense by Year" (individual percentages, cols. J–Q) and "RD_EN Summary w %" (team percentages, row 25, cols. G–N); *see also* JX-0197C. Shoals' methodology is thus plainly distinguishable from the method found unreliable in *Certain Power Semiconductors, & Mobile Devices & Computers Containing Same*, Inv. No. 337-TA-1308, FID, 2023 WL 4045379 at *57 (May 18, 2023) (Bhattacharyya) (time estimates were contradicted by deposition testimony and complainant applied consistent single-level allocation percentage for each product for each year after launch, including products launched over a decade ago).

Finally, Voltage challenges Shoals' R&D investments because certain employees received salary increases. RPost-HB at 156. But Voltage identifies no basis for excluding raises. *See id.* To the contrary, high compensation paid to R&D employees is evidence of significance. *See, e.g., Certain Semiconductor Devices & Consumer Audiovisual Prod. Containing the Same*, Inv. No. 337-TA-1047, FID, 2018 WL 3062372 at *275–276 (May 11, 2018) ("In particular, the number of R&D engineering and the product-line engineering employees, along with their relatively high compensation (on average), are significant.").

2. Shoals' SG&A expenses are qualifying domestic investments.

Voltage and Staff argue that Shoals' selling, general, and administrative (SG&A) expenses should have less weight because they are akin to activities of a mere importer. RPost-

[redacted]

HB at 158; SPost-HB at 72. But, as discussed above, Shoals is not a mere importer. *See* § VII.C.1, *supra.*

> [W]here a complainant is plainly not a mere importer, as here, there is no reason why all of the complainant's activities relating to the Domestic Industry Products should not be included as part of the domestic industry. The reality is that investments in sales, human resources, and travel are necessary to maintain a competitive position in the market for the patented technology.

Put Walls, Inv. No. 337-TA-1293, Comm'n Op., 2023 WL 5426449 at *14 (Aug. 17, 2023); *see also Certain Video Displays, Components Thereof, and Prods. Containing the Same*, Inv. No. 337-TA-687, Ord. No. 20 (ID), 2010 WL 2306671, at *5 (May 20, 2010) (domestic customer support activities supported a finding of economic domestic industry).[39] Shoals' sales, administrative, and customer support teams are critical to support the BLA. *See* CPost-HB at 148–151. In addition, Shoals' trade show expenses are properly included because Shoals educates customers regarding the BLA technology at trade shows, and Shoals is not relying solely on marketing expenses to satisfy the economic prong. *See* CPost-HB at 153–154; *Integrated Circuits*, Ord. No. 38, 2019 WL 7288999 at *5–6 (Nov. 4, 2019).

3. Shoals' direct labor investments are properly included and reliable.

Voltage contends that Shoals' direct labor investments are overstated because they include contract labor. RPost-HB at 160. But contract labor is necessary to enable Shoals to scale production. Tr. (Bardos) at 665:9–20 ("They're actually doing the same work on the floor, but that was a great way for us to augment our staff with the rapid growth that we had."). Further, contract labor is properly included as a domestic investment. *See* CPost-HB at 151–152; *see also*

[39] The cases cited by Voltage relate to mere importers and are thus inapposite. *See Bone Cements*, 2021 WL 287860 at *14; *Certain Kinesiotherapy Devices & Components Thereof*, Inv. No. 337-TA-823, Comm'n Op., 2013 WL 12447252 at *18 n. 8 (July 12, 2013); *Schaper Mfg. Co. v. Int'l Trade Comm'n Trade Comm'n*, 717 F.2d 1368, 1373 (Fed. Cir. 1983).

[redacted]

Certain Wet Dry Surface Cleaning Devices, ID, Inv. No. 337-TA-1304, 2023 WL 2824398 at *159–160 (Mar. 24, 2023) ("*Cleaning Devices*") (contract labor appropriately included in domestic industry analysis); *Certain Movable Barrier Operator Sys. & Components Thereof*, Inv. No. 337-TA-1209, Ord. No. 12 (ID), 2021 WL 2155165 at *7 (Apr. 26, 2021) ("*Movable Barrier*") (finding significant investments in labor costs "including salaries, wages, benefits, contract labor, and commissions"); *Certain Mobile Tels., Tablet Computers with Cellular Connectivity, & Smart Watches with Cellular Connectivity, Components Thereof, & Prod. Containing Same*, Inv. No. 337-TA-1299, Ord. No. 22, 2022 WL 17688524 at *8–9 (Nov. 15, 2022) ("*Smart Watches*") (same).

In addition, whether Shoals pays benefits, payroll, taxes, or other similar expenditures directly to employees, or through a third-party employment agency should not matter. At worst, Shoals is outsourcing a portion of its human resource operations and indirectly paying the wages and benefits of agency employees (who are also based in the United States). Tr. (Bardos) at 762:18–763:7. Further, there is no basis for excluding any such fees; contract labor is included as a qualifying domestic investment without reduction. *See, e.g.*, *Cleaning Devices*, 2023 WL 2824398 at *159–160; *accord Movable Barrier*, 2021 WL 2155165 at *7 and *Smart Watches*, 2022 WL 17688524 at *8–9.

E. Shoals' investments are quantitatively and qualitatively significant.

1. Shoals has shown the significance of its domestic industry investments in the context of its operations.

Voltage alleges that Shoals has not shown significance in the context of Shoals' operations, marketplace, or industry. RPost-HB at 161.This context has been principally addressed in Shoals' initial post-hearing brief, which discusses Shoals' BLA revenues in comparison to its overall revenues year-over-year as well as the significance of the BLA to

[redacted]

Shoals' business. *See* CPost-HB at 158–159. In addition, to further address Voltage's argument, the record reflects that Shoals' investments in plant and equipment and labor and capital grew year over year, thus Shoals' investments are significant in the context of its operations. *See* CDX-0012C.7 (depicting yearly plant and equipment investments based on JX-0091C, JX0134C, JX-0195C, JX-0271C, JX-0276C, and JX-0215C); CDX-0012C.18 (depicting yearly labor and capital investments based on JX-0133C, JX-0134C, JX-0272C, JX-0196C, JX-0197C, JX-0275C, and JX-0276C); *see, e.g.*, *Put Walls*, Inv. No. 337-TA-1293, Comm'n Op., 2023 WL 5426449 at *15–16 (Aug. 17, 2023) (finding investments significant within the context of complainant's operations when "each and every category of expenditure, including plant, equipment, labor, and capital demonstrate marked [% increase redacted] year over year.").

Shoals has also provided financial information relating to its global operations, which Mr. Nelson used for his allocations. Tr. (Nelson) at 834:1–10 (allocation of administrative labor based on worldwide revenue) (calculation depicted on CDX-0012C.25), 869:12–16, 872:6–17. And Voltage's argument that Shoals should have provided evidence about facilities in Japan and the United Arab Emirates is baseless: Shoals *does not have* any offices or facilities in Japan or the United Arab Emirates. Tr. (Bardos) at 659:12–20, 802:22–803:3, 803:23–804:21.

2. Voltage's and Staff's value-add arguments are inapposite.

Voltage complains that Mr. Nelson's value-add analysis "includes all of Shoals' profits, which can be affected by external factors, such as market demand or government policies concerning solar energy." RPost-HB at 162;[40] *see also* SPost-HB at 73. This ignores Mr.

[40] To the extent Mr. Clarke argues Shoals should have compared its foreign manufacturing and domestic manufacturing costs (Tr. (Clarke) at 1013:17–1014:10), his argument makes no sense because, as Mr. Clarke acknowledges, Shoals does not engage in foreign manufacture of the BLA. *Id*. at 1021:7–13. Therefore, the comparison suggested by Mr. Clarke and *Certain*

[redacted]

Nelson's explanation that including profits is appropriate in his value-add analysis because if Shoals were a "mere importer," there would be little difference between costs and revenue because there would be no "opportunity to generate profit." Tr. (Nelson) at 839:3–10. For that purpose, the profits are precisely the point: by showing added value of better than 3:1 (*i.e.*, 77.2% of revenue), Mr. Nelson shows that Shoals *cannot* be a mere importer, because if it were, its profits would be limited to arbitrage. This matters for two reasons. First, Voltage and Staff try to tap into a line of authority that says certain categories of investment should be discounted for mere importers. By disproving the mere-importer predicate, Mr. Nelson further justifies his inclusion of such investments. Second, the statutory command is to gauge the significance of Shoals' investments "with respect to the articles protected by the patent." 19 U.S.C. § 1337(a)(3). Not even Mr. Clarke suggests that the "market demand or government policies encouraging solar energy" factors that he mentions would attach to the unimproved wire and resin that Shoals, through its investments, transforms into patent-practicing products. That Shoals' investments are a but-for cause of three-fourths of the revenue derived from the products is a compelling indicator of significance, whether or not there might be additional factors in play.

Further, Voltage's squabbling over the details or alleged novelty of Mr. Nelson's methodology cannot change the fact that 100% of the value-add occurs domestically. The Commission has found quantitative and qualitative significance when, as here, "100% of the manufacture of the [DI product] occurs domestically," *i.e.*, that "100% of the value-add for the product will be in the United States." *Certain Luxury Vinyl Tile & Components Thereof*, Inv. No. 337-TA-1155, Comm'n Op., USITC Pub. No. 5288, 2022 WL 20402980 at *178 and 180 (Mar.

Microlithographic Machines and Components Thereof, Inv. No. 337-TA-468, ID, 2023 WL 1831891 at *204 (Jan. 29, 2003) is inapplicable.

[redacted]

1, 2022) (citing *Certain Carburetors & Prods. Containing Such Carburetors*, Inv. No. 337-TA-1123, Comm'n Op. at 18-19 (Oct. 28, 2019)); *cf. Certain Foldable Reusable Drinking Straws & Components & Accessories Thereof*, Inv. No. 337-TA-1183, Ord. No. 13 (ID), 2020 WL 5836575 (July 17, 2020) ("*Drinking Straws*") ("Activities that take place solely in the United States would be significant 'by definition' … when those activities constitute all of the value-add to a Domestic Industry Product (and are not otherwise *de minimis* in isolation).") (citation omitted). Under the Commission's standard, Shoals' domestic BLA investments are quantitatively and qualitatively significant.

3. Shoals properly established quantitative significance based on its manufacturing ratio.

Voltage and Staff complain that Shoals' manufacturing to sales ratio omitted administrative labor. RPost-HB at 163; SPost-HB at 74. Voltage and Staff argue that inclusion of administrative labor would reduce the 7x ratio to a less than 2x ratio. *Id.* But manufacturing is far more administration-intensive than sales administration. JX-0205C (Bardos) at 188:16–189:2 (indirect labor checks quality of work of direct labor); Tr. (Nelson) at 831:15–832:1. Thus, if administrative labor was included, it would be properly counted in the numerator, not denominator—which would *increase* the ratio rather than decrease it. Tr. (Nelson) at 896:23–897:14. More importantly, regardless of which ratio is applied, Shoals' domestic labor investments are significant. *See, e.g.*, *Drinking Straws*, Ord. No. 18, 2020 WL 6156601 at *6 (Sept. 22, 2020) ("Overall, [complainant's] investment in domestic labor is significant inasmuch as virtually all of [complainant's] labor force required to function as a successful consumer product brand are located in the United States").

[redacted]

4. Shoals properly established quantitative significance based on revenues.

Finally, Voltage argues that revenues are not relevant to a significance analysis. RPost-HB at 163. This is not true.[41] Revenue comparisons have been used to assess quantitative significance. *See, e.g.*, *Certain Table Saws Incorporating Active Injury Mitigation Tech. and Components Thereof*, Inv. No. 337-TA-965, Order No. 10, ID at 17 (Apr. 27, 2016) (finding quantitative significance of labor costs amounting to 11–19% percent of complainant's gross sales); *Certain Apparatus & Methods of Opening Containers,* Inv. No. 337-TA-1255, Ord. No. 11 (ID), 2021 WL 6194978 at *14–15 (Dec. 20, 2021) (finding "quantitatively significant" complainant's investment in plant and equipment which "amounts to approximately 9% of this income") (citing *Bone Cements,* 2021 WL 287860 at *17) (assessing significance by comparing domestic activities to gross sales)).

Shoals has unequivocally shown that it has met the economic domestic industry requirement. If Shoals, with its vertically integrated domestic manufacturing operation, does not meet the domestic industry requirement, then who does?

VIII. REMEDY

A. An exclusion order should issue, with no carveout.

The parties do not dispute that if a Section 337 violation is found, a limited exclusion order (LEO) should issue. *See* CPost-HB at 162; RPost-HB at 164; SPost-HB at 75. The only dispute concerns the scope of such exclusion order. While Shoals and Staff have not proposed any limitations on a LEO (CPost-HB at 162–164; SPost-HB at 75–76), Voltage requests three

[41] As Staff recognized, "[r]easonable and appropriate allocation methodologies, such as sales-based allocations, have routinely been employed and accepted by the Commission for purposes of satisfying the economic prong." SPost-HB at 14 (citing *Certain Toner Cartridges and Components Thereof*, Inv. No. 337-TA-918, Order No. 22 at 3-5 (Jan. 16, 2015)).

conditions, without evidentiary support: (1) limiting the exclusion order to configurations of LYNX found to infringe, (2) a service and repair exception, and (3) a timing exception "to permit respondents to deliver products to customers under contracts entered into prior to the Target Date." RPost-HB at 164. Voltage's first request is unnecessary as any remedial order would only cover infringing products. 19 U.S.C. § 1337(d)(1); *Certain Marine Air Conditioning Sys., Components Thereof, & Prod. Containing the Same*, Inv. No. 337-TA-1346, ID, 2023 WL 8664238 at *58 (Dec. 8, 2023) (denying limitation requiring LEO to "state that it 'does not cover' non-infringing articles") (citing *Certain Composite Aerogel Insulation Materials and Methods for Mfg. the Same*, Inv. No. 337-TA-1003, Comm'n Op. at 64, 2018 WL 8648369 at *39–40 (Feb. 22, 2018)).

As to Voltage's second request, although Shoals does not oppose a service and repair exception, any "service, repair, and replacement exceptions are properly evaluated as part of the public interest analysis, which has not been delegated here." *Id.* at *58 (citing *Certain Wearable Electronic Devices with ECG Functionality and Components Thereof*, Inv. No. 337-TA-1266, Comm'n Op. at 50, 2023 WL 372372 at *28 (Jan. 20, 2023)).

Voltage's third request, however, should be denied for at least three reasons. IMPORT, ¶ 7. [42]

[42]

[redacted] *See* CPost-HB at 163–164 (citing *Certain High-Density Fiber Optic Equip. & Components Thereof*, Inv. No. 337-TA-1194, Comm'n Det., 2021 WL 1608900 at *270 (Mar. 23, 2021) and *Certain Road Milling Machs. & Components Thereof*, Inv. No. 337-TA-1067, Comm'n Op. at 14-15, 2019 WL 8883974 at *7-8 (Aug. 7, 2019)).

Third, Voltage's request for a delay is premised upon purported harm to the public interest (RPost-HB at 164–165), but public interest has not been delegated in this Investigation (88 Fed. Reg. 37905-06 (June 9, 2023)), and Voltage has withdrawn any public interest defenses. *See* CPre-HB at 200–201 and 201 n. 38; RPre-HB, *generally*. Therefore, Voltage is precluded from asserting public interest as a basis for any delay.[43] Voltage cannot establish that the requested carveout is needed.

Lastly, the LEO should not exempt alternative design products, because the evidence has demonstrated that even Voltage's alternative design products infringe the '153 patent. But if the

---

Target Date, Shoals reserves the right to seek relief from the Commission. Voltage's request should be denied.

[43] Even if public interest was considered, Voltage cannot establish harm to the public interest when any such projects can be completed with DI products from Shoals. Tr. (Bardos) at 653:7–22. Although Voltage argues that its LYNX products are not fungible, Voltage does not argue that they could not be replaced by Shoals or other non-infringing products. RPost-HB at 64. Nor does Voltage identify any cognizable harm to third parties if they had to redesign projects. *See id.* When, as here, a respondent provides no record evidence of harm to specific U.S. consumers to justify exemption, the Commission has rejected such requests. *Certain Light-Emitting Diode Products, Fixtures, and Components Thereof*, 337-TA-1213, Comm'n Op., at 13, 2022 WL 168302 at *11–12 (Jan. 14, 2022).

[redacted]

AD LYNX is adjudicated and found to be noninfringing, [redacted] *Hyundai Elecs. Indus. Co. v. Int'l Trade Comm'n*, 899 F.2d 1204, 1209 (Fed. Cir. 1990) (affirming limited exclusion order requiring respondent to certify, as a condition of entry, that certain of its downstream or secondary products did not infringe or contain infringing components); CPost-HB at 164–165.

B. Voltage should be required to post 100 percent bond.

Voltage's argument that a bond is not necessary because Shoals "did not present *any evidence* that Shoals and Voltage are even in competition with each other" and has not established that it would suffer any injury during the presidential review period lacks credibility. RPost-HB at 166 (emphasis in original). First, Shoals presented testimony from Mr. Macias and Mr. Nelson regarding competition with Voltage, and Voltage's own witness testified that Shoals' BLA and Voltage's LYNX compete directly. Tr. (Macias) at 142:5–18; Tr. (Nelson) at 842:7–16; JX-0210C (Ge) at 29:4–6 ("Q. Do you consider Shoals to be a competitor of your LYNX Trunk Bus product? A. I will, yeah."). Second, Shoals presented ample evidence that Shoals has suffered a multitude of harms due to competition with LYNX:

> Q. Okay. And have you seen any harm to Shoals' business by Voltage's sale of the LYNX Trunk Bus?
>
> A. Yes.
>
> Q. How so? Can you describe that?
>
> A. I mentioned previously we're losing projects. We're being undercut significantly on price. Upon information and belief that I have, they are manufacturing in China and dumping the LYNX system into the United States.
>
> Q. Have you seen any other harm?
>
> A. Price, our price has come down significantly, and as a result our prices, our margins, upwards of 50 percent is kind of the difference, and I would say, lastly, you know, reputational harm.

[redacted]

> Q. What do you mean by reputational harm?
>
> A. Folks have known Shoals for quality products for a long time, especially with BLA, and any product that comes short of that is a potential for the customer to question technology that we have.

Tr. (Macias) at 143:8–25; *see also,* Tr. (Tolnar) at 273:22–24, 297:14–23 (regarding projects lost to Voltage); Tr. (Bardos) at 745:2–25 ("My position is that if we lose this BLA sale to a competitor, we lose $1.5 million, the whole quote, the whole quote.") (referring to CX-0266C).

Next, Mr. Clarke's reliance on charts showing Shoals' sales to common customers for purposes of establishing lack of harm is fundamentally flawed. If Mr. Clarke actually wanted to show that Shoals' BLA sales were unaffected by LYNX sales, Mr. Clarke would have included LYNX sales in his charts, but he decidedly did not. *See* RPost-HB at 166–168; Tr. (Clarke) at 1017:22-1018:6; RDX-0015C.0033 (depicting Shoals sales to common customers); RDX-0015C.0034 (depicting Shoals sales to Mortenson). Simply put, Mr. Clarke's charts do not show what Shoals' BLA sales would have been but-for Voltage's infringement. Without complete data, Mr. Clarke's charts depict nothing more than correlation without causation. Because Shoals has provided evidence of harm, a bond is necessary. 19 U.S.C. § 1337(j).

In addition, Shoals and Staff agree that a bond rate of 100% should be imposed because a price differential analysis is impractical.[44] *See* CPost-HB at 165–168; SPost-HB at 77, 78. The record reflects that Shoals' and Voltage's prices vary by project and product based on a variety of factors. CPost-HB at 165–168; SPost-HB at 77, 78; *see also* Tr. (Macias) at 135:15–24 (regarding BLA); JX-0211C (Joseph) at 150:22–151:9, 139:2–15, 141:6–24, 175:10–176:2,

[44] Also, there is no established royalty because the '153 patent has not been licensed. Am. Compl., ¶ 50; Tr. (Nelson) at 842:18–20.

[redacted]

142:10–143:7, 143:8–18, 152:11–22 (regarding LYNX).[45] And, although Voltage claims to have provided an average sales price for the LYNX (which Shoals disputes), Voltage does not claim to have provided a method to compare the products to enable a comparison for a price differential. *See* RPost-HB at 168*; see also* Tr. (Nelson) at 842:21–25. Nor could it, [redacted]. Tr. (Macias) at 133:19–135:3 (referring to CX-0266C); Tr. (Bardos) at 654:4–10, 670:8–24; *see* JX-0155C (invoice spreadsheet with LYNX descriptions); JX-0198C at 14–15 ([redacted]).

Because a meaningful price differential and any alternative approach is impractical, the Commission cannot effectively calculate a sufficient bond; therefore, a bond of 100 percent is appropriate here. *See Certain Sucralose, Sweeteners Containing Sucralose, and Related Intermediate Compounds Thereof,* Inv. No. 337-TA-604, Comm'n Op., 2009 WL 1178470, at *51 (Apr. 28, 2009) ("In view of the lack of adequate pricing data, we agree with the ALJ that bonding should be in the amount of 100% of entered value, which is the Commission's practice in such circumstances."); CPost-HB at 165–168.

IX. CONCLUSION

As explained here, the evidence establishes that a violation of Section 337 has occurred, and the Judge should recommend an appropriate limited exclusion order to protect Shoals' domestic industry and curtail Voltage's infringement.

[45] According to Shoals' records, the deposition transcript of Voltage's corporate witness is in evidence, but the cited portions were not designated. Because the relevant citations have been relied on in initial post-hearing briefing (*see* SPost-HB at 77), Shoals includes them in its response.

[redacted]

Dated: April 26, 2024

Respectfully submitted,

/s/ Charles S. Barquist

Charles S. Barquist
MASCHOFF BRENNAN
1801 Century Park East, Suite 2400
Los Angeles, California 90067

Kirk R. Harris
Eric L. Maschoff
R. Parrish Freeman
MASCHOFF BRENNAN
1389 Center Drive, Suite 300
Park City, Utah 84098

L. Rex Sears
Jacob O. Israelsen
MASCHOFF BRENNAN
95 S. State Street, Suite 800
Salt Lake City, Utah 84111

Christina L. Trinh
Carol A. Hanna Girgis
MASCHOFF BRENNAN
100 Spectrum Center Drive, Suite 1200
Irvine, California 92618

Jason R. Bartlett
MASCHOFF BRENNAN
450 Sansome Street, Suite 1005
San Francisco, California 94111

ShoalsMB-ITC@mabr.com

Daniel E. Yonan
Uma Everett
Josephine Kim
STERNE, KESSLER, GOLDSTEIN & FOX PLLC
1101 K Street, NW, 10th Floor
Washington, DC 20005

Shoals-ITC@sternekessler.com

[redacted]

Counsel for Complainant Shoals Technologies Group, LLC

[redacted]

In the Matter of **CERTAIN PHOTOVOLTAIC CONNECTORS AND COMPONENTS THEREOF**	**Investigation No. 337-TA-1365**

CERTIFICATE OF SERVICE

I, hereby certify that on this day, May 14, 2024, a true and correct copy of the foregoing has been served on the following as indicated:

The Honorable Katherine M. Hiner Secretary to the Commission U.S. INTERNATIONAL TRADE COMMISSION 500 E Street, S.W. Washington, D.C. 20436	☒ Via Electronic Filing (EDIS) ☐ Via Electronic Filing (OUII Box) ☐ Via Hand Delivery ☐ Via First Class Mail ☐ Via Electronic Mail ☐ Via Overnight Courier
The Honorable Monica Bhattacharyya Administrative Law Judge U.S. INTERNATIONAL TRADE COMMISSION 500 E Street, SW Washington, D.C. 20436 Bhattacharyya337@usitc.gov	☒ Via Electronic Filing (EDIS) ☐ Via Electronic Filing (OUII Box) ☐ Via Hand Delivery ☐ Via First Class Mail ☒ Via Electronic Mail ☐ Via Overnight Courier
John Shin, Esq. OFFICE OF UNFAIR IMPORT INVESTIGATIONS U.S. INTERNATIONAL TRADE COMMISSION 500 E Street, S.W., Suite 401 Washington, D.C. 20436 John.shin@usitc.gov	☐ Via Electronic Filing (EDIS) ☐ Via Electronic Filing (OUII Box) ☐ Via Hand Delivery ☐ Via First Class Mail ☒ Via Electronic Mail ☐ Via Overnight Courier
Siddhesh V. Pandit Timothy J. Maier Michael R. Casey Daniel J. Ehrlich MAIER & MAIER 345 South Patrick Street Alexandria, VA 22314	☐ Via Electronic Filing (EDIS) ☐ Via Electronic Filing (OUII Box) ☐ Via Hand Delivery ☐ Via First Class Mail ☒ Via Electronic Mail ☒ Via Overnight Courier

[redacted]

hikamitc1365@maierandmaier.com *Counsel for Respondents Hikam America, Inc., Hikam Electrónica de México, S.A. de C.V., Hikam Tecnologia de Sinaloa, Hewtech Philippines Corp., Hewtech Philippines Electronics Corp., and Hewtech (Shenzhen) Electronics Co., Ltd.*	
Philip Ou Yar R. Chaikovsky Jonathan Lamberson Bruce Yen Michael Costello-Caulkins Yolanda Xu WHITE & CASE LLP 3000 El Camino Real 2 Palo Alto Square, Suite 900 Palo Alto, CA 94306 Jordan Coyle WHITE & CASE LLP 701 13th Street NW, Suite 300 Washington, D.C. 2005 Jason Hsiao WHITE & CASE LLP 16th Floor, York House The Landmark 15 Queen's Road Central, Hong Kong SAR WCVoltage337TA1365@whitecase.com *Counsel for Respondents Voltage, LLC and Ningbo Voltage Smart Production Co.*	☐ Via Electronic Filing (EDIS) ☐ Via Electronic Filing (OUII Box) ☐ Via Hand Delivery ☐ Via First Class Mail ☒ Via Electronic Mail ☐ Via Overnight Courier

/s/ Charles S. Barquist

MASCHOFF BRENNAN
1801 Century Park East, Suite 2400
Los Angeles, California 90067