UNITED STATES INTERNATIONAL TRADE COMMISSION
WASHINGTON, D.C.

Before the Honorable Monica Bhattacharyya
Administrative Law Judge

In the Matter of **Certain Photovoltaic Connectors and Components Thereof**	Inv. No. 337-TA-1365

RESPONDENTS' POST-HEARING BRIEF

Shoals Technologies Group, LLC
EXHIBIT 2018
Voltage, LLC v.
Shoals Technologies Group, LLC
PGR2024-00022

TABLE OF CONTENTS

I. Introduction 1

A. Procedural History 11
B. The Parties 12

1. Complainant Shoals 12

2. Voltage Respondents 12

C. Overview of the Technology 13
D. The Patent at Issue – U.S. Patent No. 11,689,153 15
E. The Level of Skill of One of Ordinary Skill in the Art (POSA) 21

1. Shoals' Challenge against Dr. Kenny's qualification as a POSA 21

2. Shoals proposed an unduly narrow definition of POSA 25

F. The Products at Issue 29

1. Shoals' Domestic Industry Products 29

2. Voltage's Accused LYNX Trunk Bus and AD Trunk Bus Products 29

II. Jurisdiction and Importation 30

A. Jurisdiction 30
B. Importation 31

III. U.S. Patent 11,689,153 – Claim Construction 31

A. *Markman* Order No. 16 31

B. "Aperture" Terms and Further Claim Construction 33

a. Mr. Brooks' Inconsistent and Incorrect Application of the "Aperture" Construction 35

b. Intrinsic Record Does Not Support Shoals' and Mr. Brooks' Interpretation 41

c. Dr. Cameron's Explanation of the Confusion From *Markman* Hearing Based on "Drop Line" 47

d. Dr. Cameron's Interpretation of the "Aperture" Construction 49

e. The Testimony of the Other Technical Experts Support Dr. Cameron's Interpretation of "Aperture" 51

C. Other Disputed Claim Terms 58

IV. U.S. Patent 11,689,153 - Non-Infringement 58

A. Scope of Products at Issue 58

1. Representativeness of Voltage Accused Trunk Bus Products 58

2. Adjudication of Voltage's AD Trunk Bus Products 59

a. Legal Standard 59

b. Factor 1: the AD Trunk Bus is Within the Scope of the Investigation 60

c. Factor 2: the AD Trunk Bus has been imported 61

d. Factor 3: the AD Trunk Bus is sufficiently fixed in design 64

e. Factor 4: The Fixed Design of the AD Trunk Bus has Been Sufficiently Disclosed by Voltage During Discovery 71

B. Voltage's Accused LYNX and AD Trunk Bus Products Do Not Infringe 74

(1) Claim 1 74

a. [1.c.ii] [1.c.iii] No second / third aperture that extends only partially through the undermold 74

i. Dr. Cameron's claim construction 74

ii. Shoals' infringement theory is inconsistent with and does not apply the *Markman* Order 82

b. [1.c] AD Trunks Bus: No undermold that fully encases the nexus 84

i. Mr. Brooks' visual test 84

(2) Claims 11, 12, 13, 14 and 18 88

(3) Claim 21 89

a. [21.b.iv.b] [21.b.iv.c] No second / third aperture that extends only partially through the primary mold 89

b. [21.b.iv.b] [21.b.iv.c] AD Trunks Bus: No second / third aperture that extends only partially through the outer mold 89

c. [21.b.iv] AD Trunks Bus: [redacted] 90

i. [redacted] 90

ii. [redacted] 93

(4) Claim 23 95

(5) Claim 24 96

a. [24.b.iii.b] No second aperture that extends only partially through the primary mold 96

b. AD Trunks Bus: 96

c. AD Trunks Bus: 96

V. U.S. Patent 11,689,153 -No DI – Technical Prong 96

A. Representative Products 96

1. Order No. 28 and Limitations on Brooks' Testimony on Representativeness 97

2. Shoals' Fact Witnesses Did Not Establish Representativeness 99

3. The Shoals Intertek Report Does Not Establish Representativeness 102

B. Shoals DI Products Do Not Practice the '153 Patent 102

(1) Claim 1 102

a. [1.c] No second/ third aperture that extends only partially through the undermold 102

(2) Claims 11, 12, 13, 14 and 18 104

(3) Claim 21 104

(4) Claim 23 104

(5) Claim 24 105

C. '153 Patent Validity 105

4. Legal Standard 105

5. Obviousness over *Yamawaki-Shao* Combination 106

b. Overview of *Yamawaki* 106

c. Overview of *Shao* 107

d. The *Yamawaki-Shao* Combination Would Have Been Obvious 110

i. Motivation to combine *Yamawaki* and *Shao* 110

ii. The examiner's combination of *Yamawaki* and *Vander Ploog* corroborates the motivation to combine *Yamawaki* and *Shao*. 111

e. Claim 1 114

i. Claim [1.p] 114

ii. Claim [1.a] 114

iii. Claim [1.b] 116

iv. Claim [1.c] 117

v. Claim [1.d] 122

f. Claim 12 122

g. Claim 13 123

h. Claim 14 124

i. Claim 18 124

j. Claim 21 124

i. Claim [21.p] 124

ii. Claim [21.a] 124

iii. Claim [21.b] 125

k. Claim 23 127

l. Claim 24 127

i. Claim [24.p] 128

ii. Claim [24.a] 128

iii. Claim [24.b] 128

(2) Invalidity Under 35 U.S.C. § 112 128

VI. economic Domestic industry 139

A. Legal Standard 139

B. Argument 140

a. Shoals' subsection (A) investments rely significantly on [redacted]. 147

b. Shoals overstated its investment in [redacted]. .. 151

c. Shoals' expenditure for [redacted] lacks evidentiary support 152

b. A substantial percentage of Shoals' [redacted] 157

d. Shoals' [redacted] is overstated. 160

VII. Remedy & Bonding 164

A. Limited Exclusion Order 164
B. Shoals is not seeking a cease-and-desist order. 165
C. No bond should be required. 165

(1) Shoals failed to prove it will suffer injury during the PRP. 166

(2) Shoals failed to meet its burden regarding the amount of any bond... 168

VIII. CONCLUSION 168

TABLE OF AUTHORITIES

Page(s)

FEDERAL CASES

Alloc, Inc. v. Int'l Trade Comm'n,
342 F.3d 1361 (Fed. Cir. 2003).....139

Amgen Inc. v. Sanofi,
598 U.S. 594 (2023).....106

Best Med. Int'l, Inc. v. Elekta Inc.,
46 F.4th 1346 (Fed. Cir. 2022).....23

Duncan Parking Techs. Inc. v. IPS Group, Inc.,
914 F.3d 1347 (Fed. Cir. 2017).....89, 95, 104, 105

Enzo Biochem, Inc. v. Gen-Probe Inc.,
323 F.3d 956 (Fed. Cir. 2002).....106

Icon Health and Fitness, Inc. v. Strava, Inc.,
849 F.3d 1034 (Fed. Cir. 2017).....62

Intercontinental Great Brands LLC v. Kellogg N. Am. Co.,
869 F.3d 1336 (Fed. Cir. 2017).....105

KSR Int'l Co. v. Teleflex Inc.,
550 U.S. 398 (2007).....105

Lelo Inc. v. Int'l Trade Comm'n,
786, 879, 833 (Fed. Cir. 2015).....140, 158, 162

Motiva, LLC v. Int'l Trade Comm'n,
716 F.3d 596 (Fed. Cir. 2013).....145

Nautilus, Inc. v. Biosig Instruments, Inc.,
572 U.S. 898 (2014).....105

Schaper Mfg. Co. v. U.S. Int'l Trade Comm'n,
717 F.2d 1368 (Fed. Cir. 1983).....158

United States v. Rodriquez,
No. 10-20613-CR, 2011 666136 (S.D. Fla. Feb. 13, 2011).....144

United States v. Sampson,
No. 21-CR-20732, 2023 WL 8772873 (E.D. Mich. Dec. 19, 2023).....144

REGULATORY CASES

Certain Access Control Sys. & Components Thereof,
Inv. No. 337-TA-1016, ID at 257-59 140

Certain Artificial Eyelash Extension Sys., Prods., and Components Thereof,
Inv. No. 337-TA-1226, Comm'n Op. 147, 149

Certain Bone Cements, Components Thereof, and Prods. Containing the Same,
Inv. No. 337-TA-1153, Comm'n Op. 147, 158

Certain Carburetors and Prods Containing Such Carburetors,
Inv. No. 337-TA-1123, Comm'n Op. 140, 161

Certain Composite Aerogel Insulation Materials,
Inv. No. 337-TA-1003, Comm'n Op., 2018 WL 8648369 165

Certain Computer Forensic Devices and Products Containing the Same,
Inv. No. 337-TA-799, ID at 11 142

Certain Concealed Cabinet Hinges and Mounting Plates,
Inv. No. 337-TA-289, Comm'n Op, 1990 ITC LEXIS 3 (Jan. 8, 1990) 146, 161

Certain Dimmable Compact Fluorescent Lamps and Prods. Containing Same,
Inv. No. 337-TA-830, ID at 63 143

Certain Elec. Candle Prods. and Components Thereof,
Inv. No. 337-TA-1195, Comm'n Op. 139, 146, 162

Certain Electrical Connectors And Cages, Components Thereof, And Products Containing the Same,
Inv. No. 337-TA-1241 70

Certain Electronic Devices, Including Streaming Players, Televisions, Set Top Boxes, Remote Controllers, and Components Thereof,
Inv. 337-TA-1200, Final Initial Determination 71

Certain Filament Light-Emitting Diodes and Products Containing Same (II), Inv. No. 337-TA-1220, Comm'n Op. 62

Certain Flocked Swabs, Products Containing Flocked Swabs, and Methods of Using Same,
Inv. No. 337-TA-1279 70

Certain Human Milk Oligosaccharides,
Inv. No. 337-TA-1120, Comm'n Op. 59, 61, 73

Certain Kinesiotherapy Devices and Components Thereof,
Inv. No. 337-TA-823, Comm'n Op. 158

Certain Light-Based Physiological Measurement Devices and Components Thereof,
Inv. 337-TA-1276, Order No. 32 97

Certain Male Prophylactic Devices,
Inv. No. 337-TA-546, Comm'n Op. 139

Certain Microlithographic Machines and Components Thereof,
Inv. No. 337-TA-468, ID at 360-61 .....161, 163

Certain Mobile Devices with Multifunction Emulators,
Inv. No. 337-TA-1170 71

Certain Mobile Elec. Devices,
Inv. No. 337-TA-1324, Order No. 23 164

Certain Nor and Nand Flash Memory Devices and Prods. Containing the Same,
Inv. No. 337-TA-560, ID, 2008 WL 2622574 (June 1, 2007) 140

Certain Personal Data and Mobile Comm. Devices and Related Software,
Inv. No. 337-TA-710, Comm'n Op. 166

Certain Polycrystalline Diamond Compacts and Articles Containing the Same,
Inv. No. 337-TA-1236, ID at 148-49 152

Certain Power Semiconductors, and Mobile Devices and Computers Containing Same,
Inv. No. 337-TA-1308, ID at 122 156

Certain Printing and Imaging Devices and Components Thereof,
Inv. No. 337-TA-690, Comm'n Op. 140, 146

Certain Replacement Auto. Lamps II,
Inv. No. 337-TA- 1292, Initial Determination.....97

Certain Replacement Automotive Lamps II,
Inv. No. 337-TA-1292, Comm'n Op. 139, 143

Certain Rubber Antidegradants, Components Thereof, and Prods. Containing Same,
Inv. No. 337-TA-533, Comm'n Op. 166, 169

Certain Subsea Telecomm. Sys. and Components Thereof,
Inv. No. 337-TA-1098, Comm'n Op. 141, 142

Certain Television Sets, Television Receivers, Television Tuners and Components Thereof,
Inv. No. 337-TA-910, Comm'n Op. 142

Custom Accessories, Inc. v. Jeffrey-Allan Indust., Inc.,
807 F.2d 955, 1 USPQ2d 1196 (Fed. Cir. 1986) 23

Environmental Designs, Ltd. v. Union Oil Co. of California,
713 F.2d 693, 218 USPQ 865 (Fed. Cir. 1983) 23

Methods of Prod.,
Inv. No. 337-TA-1005, Comm'n Op. 166

FEDERAL STATUTES

19 U.S.C. § 1337 .....31, 139, 140, 166

35 U.S.C. § 103 .....106, 107

35 U.S.C. § 112 .....26, 27, 58, 89, 95, 104, 105, 128, 139

FEDERAL RULES

Rule 210.4(c)-(d) 64

FEDERAL REGULATIONS

19 C.F.R. § 210.37 97

88 Fed. Reg 37905 (June 9, 2023) 60

88 Fed. Reg. 37905-906 11

88 Fed. Reg. 47188 (July 21, 2022) 156

TABLE OF ABBREVIATIONS

ALJ	Administrative Law Judge
’254 Patent	U.S. Patent No. 10,992,254
’153 Patent	U.S. Patent No. 11,689,153
Asserted Patents	Collectively the ’739 Patent, ’254 Patent and ’153 Patent
FH	Prosecution or File History
USPTO	United States Patent and Trademark Office
Shoals or Complainant	Complainant Shoals Technologies Group, LLC
Voltage or Respondents	Respondents Voltage LLC and Ningbo Voltage Smart Production Co.
Staff	Office of Unfair Imports and Investigations
JCCC	Joint Claim Construction Chart
Markman Terms	The up to eight identified terms pursuant to G.R. 6.2
DI	Domestic Industry
CPreHRB	Complainant’s Pre-Hearing Brief

CLAIM LISTING FOR U.S. PATENT NO. 11,689,153

Element	Claim Language
[1.p]	A lead assembly for use in a solar energy installation including:
[1.a]	a drop line terminating at a drop line connector, the drop line connector configured to connect with a central trunk of a wire harness, the central trunk of the wire harness having a plurality of branches that each are configured to electrically connect to a separate solar panel contained in an array of a plurality solar panels;
[1.b]	a feeder cable electrically coupled to the drop line at a *nexus;*
[1.c]	an undermold that fully encases the *nexus*, the undermold further comprising:
[1.c.i]	a first aperture extending completely through the undermold and having a first diameter, wherein the feeder cable extends through the first aperture along a first longitudinal axis; and
[1.c.ii]	a second aperture extending partially through the undermold and having a second diameter different than the first diameter, wherein the drop line extends from the second aperture along a second longitudinal axis;
[1.c.iii]	a third aperture extending partially through the undermold and having a third diameter different than the first diameter, wherein a second drop line extends from the third aperture along a third longitudinal axis; and
[1.d]	an overmold surrounding the undermold and forming an undermold-overmold interface at an outer surface of the undermold.
[11]	11. The lead assembly of claim 1, wherein the drop line includes a fuse
[12]	12. The lead assembly of claim 1, wherein said lead assembly combines power received from the plurality of solar panels and conducts that power directly to an inverter electrically connected to the feeder cable.
[13]	13. The lead assembly of claim 1, wherein the second drop line terminates at a second drop line connector, the second drop line connector configured to connect with a central trunk of a second wire harness, the central trunk of the second wire harness having a plurality of branches the each are configured to electrically connect to a separate solar panel contained in a second array of a plurality of solar panels.
[14]	14. The lead assembly of claim 13, wherein the lead assembly is configured to combine electrical power received from the array of solar panels and the second array of solar panels at the *nexus* and to deliver the combined electrical power to an inverter that is in electrical communication with the feeder cable.
[18]	18. The lead assembly of claim 15, wherein the electrical coupling between the feeder cable, the drop line and the second drop line at the *nexus* is secured with at least one of a compression lug, a solder connection, a splice, and a crimp.
[21.p]	21. A solar power system comprising:
[21.a]	a plurality of solar panels each electrically coupled to one of a plurality of branches of a wire harness to form a first solar array;
[21.b]	a lead assembly comprising:
[21.b.i]	a drop line electrically connected to a central trunk of the wire harness and configured to receive power from the plurality of solar panels;
[21.b.ii]	a second drop line electrically connected to a central trunk of a second wire harness and configured to receive power from a plurality of solar panels in a second solar

	array;
[21.b.iii]	a feeder cable, the feeder cable electrically connected to the drop line and the second drop line at a *nexus*; and
[21.b.iv]	a primary mold that fully encases the *nexus* so as to substantially seal the *nexus* from external environmental conditions, the primary mold further comprising:
[21.b.iv.a]	a first aperture extending completely through the primary mold and having a first diameter, wherein the feeder cable extends through the first aperture;
[21.b.iv.b]	a second aperture extending partially through the primary mold and having a second diameter smaller than the first diameter, wherein the drop line extends into the second aperture and
[21.b.iv.c]	a third aperture extending partially through the primary mold and having a third diameter smaller than the first diameter, wherein the second drop line extends into the third aperture.
[23]	23. The solar power system of claim 21, further comprising a secondary mold surrounding the primary mold and forming an undermold-overmold interface at an outer surface of the primary mold.
[24.p]	A solar power system comprising:
[24.a]	a plurality of solar panels electrically coupled by a wire harness to form a first solar array;
[24.b]	a lead assembly comprising:
[24.b.i]	a first drop line electrically connected to the wire harness and configured to receive power from the plurality of solar panels;
[24.b.ii]	a feeder cable, the feeder cable electrically connected to the drop line at a *nexus;*
[24.b.iii]	a primary mold that fully encases the *nexus* so as to substantially seal the *nexus* from external environmental conditions, the primary mold further comprising:
[24.b.iii.a]	a first aperture extending completely through the primary mold and having a first diameter, wherein the feeder cable extends through the first aperture along a first longitudinal axis;
[24.b.iii.b]	a second aperture extending partially through the primary mold and having a second diameter smaller than the first diameter, wherein the drop line extends into the second aperture along a second longitudinal axis; and
[24.b.iv]	a second drop line electrically connected to a second wire harness that connects to a plurality of solar panels, the second drop line electrically connected to the feeder cable at the *nexus* fully encased by the primary mold, wherein the second drop line extends into a third aperture defined by the primary mold along a third axis.

[redacted]

Pursuant to Ground Rule 13.1, Voltage respectfully submit this Post-Hearing Brief.

I. INTRODUCTION

Shoals initially filed, and the Commission instituted, this investigation asserting two patents: U.S. Patent 10,553,739 and 10,992,254. As Ben Macias, Shoals' chief revenue officer, and first witness to testify at the evidentiary hearing explained, Shoals was "losing projects", "being undercut significantly on price" and believed Voltage was "manufacturing in China and dumping the LYNX system into the United States." Tr. (Macias) at 143:12-15. Mr. Macias claimed Shoals suffered "reputational harm" because "[f]olks have known Shoals for quality products for a long time, especially with BLA, and any product that comes short of that is a potential for the customer to question technology that we have." Tr. (Macias) at 143:21-25. With that backdrop, Shoals portrayed Voltage's EBOS solutions as [redacted] which Mr. Macias said "looked identical." Tr. (Opening) at 18:18-20; 20:24-21:1; Tr. (Macias) at 144:1-5; CDX-0001C.17 (titled "Voltage Chinese Products, citing interrogatory response that Voltage manufactures in Ningbo, China).

But neither of those two patents were presented at the evidentiary hearing and Jeff Tolnar, President of Shoals, admitted that [redacted] Tr. (Tolnar) at 307:22-308:9; 311:1-3.

There was no evidence presented that Voltage copied Shoals' BLA. Nor was there any evidence that Voltage's LYNX product was inferior in quality to Shoals' BLA. While Shoals elicited testimony from its founder, Dean Solon, that [redacted] Mr. Solon shortly after admitted that [redacted] JX-0217C (Solon) at 372:1-5 ([redacted]); 380:5-22 ([redacted]).

The evidence in the record reflects the opposite of Shoals' narrative it told in opening and has told the U.S. market. Voltage began developing its Trunk Bus product years before Shoals even filed its application leading to the '153 Patent. Tr. (Ge) at 904:12-906:15. Voltage only became aware of the now-dropped '254 Patent after it completed its design and investigated whether it could protect its own design. Tr. (Ge) at 906:12-907:7. Voltage's co-founder, Ruiyan Ge, explained that as part of that process, Voltage determined that Shoals' 254 Patent covered the parallel alignment of trunk and branch cables that Voltage had seen being used in other industries for years, but its design was different. Tr. (Ge) at 907:8-908:1. The evidence showed that Shoals initially sought to patent a wire harness on a much larger scale, but as both Voltage's technical experts, Dr. Kim Cameron and Dr. Tom Kenny, explained during the hearing, the patent office did not grant Shoals such broad intellectual property rights. *See infra* Section III.A. (Claim Construction). The underlying technology is basic–electrical connections protected by molding. Shoals' own technical expert, Joshua Weiner, admitted that Shoals BLA was a "simple product." Tr. (Weiner) at 1301:5-16.

Despite the simplicity of the technology at issue, Voltage developed its products on its own—this was no knock-off. Tr. (Ge) at 904:12-906:15. Indeed, the evidence shows that Voltage's Trunk Bus is different than Shoals' BLA in nearly every aspect. . Tr. (Ge) at 911:8-912:12. . Tr. (Macias) at 203: 9-15; Tr. (Tolnar) 326:4-12. . Tr. (Ge) at 899:24-900:24.

[redacted] Tr. (Ge) at 912:24-913:7; 978:3-16; 971:24-972:9. [redacted] Tr. (Ge) at 971:24-972:9. [redacted] Tr. (Ge) at 912:24-913:7; 978:3-16; 971:24-972:9; 987:20-988:2. Notably, this is completely different than what Shoals purports to tout in its BLA spec sheet. CX-0235C ("Patented undermold/overmold process chemically bonds and hermetically seals joints."). [redacted] The mold structures for Shoals' BLA and Voltage's LYNX are also different— [redacted] *See* Tr. (Ge) at 907:13-908:1; *see also* CX-0369 (Patent Application 17/870307 (Trunk Bus System)).

Beyond the broad concept of combining electric current generated by solar panels into larger cables and protecting those connections, there is nothing identical between Shoals' BLA and Voltage's LYNX products. While Voltage differentiates itself in the solar industry with cutting edge technology, [redacted] (*see* Tr. (Ge) at 899:19-902:24, 909:8-910:14; RDX-0009 (3-D rendering demonstrative video); RDX-0010C (Virtual Reality demonstrative video)), Shoals through this Investigation seeks a monopoly over broad, unpatentable concepts. In fact, Shoals tells its investors and admitted to the

[redacted]

ALJ that it uses its patents to "create a competitive moat around its business" and that that moat seeks to prevent competitors from replicating the *benefits* of its products, irrespective of the language of its claims. Tr. (Tolnar) at 292:24-295:25, 308:18-309:4; JX-113.12, .23. Through this investigation, Shoals seeks to erect yet another barrier to entry on its way to [redacted] *Id.* The patent office did not grant Shoals a monopoly to cable assemblies used in solar, nor should this Court permit Shoals to continue suggesting to the United States market that the patent office did.

Shoals was forced to abandon the two patents it originally asserted and is left with the one that issued after institution; Shoals' litigation counsel continues to prosecute patents with an eye toward litigation. Tr. (Tolnar) at 290:24-291:10. 311:4-312:3. Shoals approached the evidentiary hearing with a litigation-driven, but legally flawed interpretation of the *Markman* Order and specifically, claim construction of the "aperture" terms. In a press release Shoals issued a week before the evidentiary hearing in response to the Order No. 20's initial determination granting summary determination of no technical prong for the '739 Patent, Shoals told the market that "[t]he '153 patent is one of Shoals' strongest patents as evidenced by the ITC's claim construction ruling, and the ITC's recent ruling related to the '739 patent does not affect Shoals' case against Voltage related to the '153 patent." RX-0752 at 2; Tr. (Tolnar) at 308:10-312:3.

The evidence presented during the hearing showed, however, that Shoals was not applying the ITC's claim construction rulings for the '153 patent, but rather an untenable interpretation and application of the construction for "aperture" and the tentative construction relating to whether an aperture extends partially through the mold. In opening statements, Shoals presented its interpretation of the *Markman* Order: that the

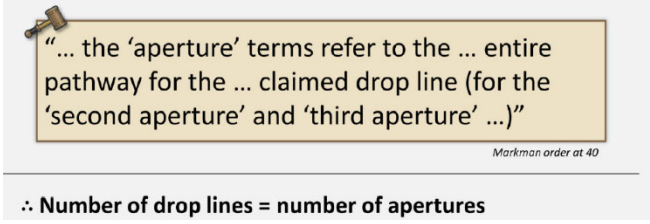

number of drop lines equals the number of apertures", where "drop line" is the same as an input or branch (CDX-0001C.35 (Shoals' Opening Slides).

Shoals' technical expert, William Brooks, confirmed that in his opinion, "for each input there is necessarily one aperture associated with it, and that aperture necessarily only extends partially through the mold. It does not go completely through." Tr. (Brooks) at 503:8-15. But Voltage's expert, Dr. Kim Cameron, explained during her direct testimony how Mr. Brooks was not applying the ALJ's construction of "aperture" correctly—effectively reading out the specific structure limitations of the claimed undermold or primary mold of the '153 Patent claims. Tr. (Cameron) at 1069:4-1071:11. Claim 21 below is illustrative. On the left is claim 21, with the specific aperture structure limitations of the primary mold emphasized in different colors. Using Mr. Brooks' opinion that the first and second drop line necessarily have an associated aperture that extends partially through the mold, the only meaningful limitation is that the diameter associated with the first aperture (feeder cable) is greater than that of the second and third apertures (drop lines)—annotated in **red**.

Claim 21	Claim 21 (Under Brooks' Opinion)
21. A solar power system comprising:	21. A solar power system comprising:
a plurality of solar panels each electrically coupled to one of a plurality of branches of a wire harness to form a first solar array;	a plurality of solar panels each electrically coupled to one of a plurality of branches of a wire harness to form a first solar array;
a lead assembly comprising:	a lead assembly comprising:
a drop line electrically connected to a central trunk of the wire harness and configured to receive power from the plurality of solar panels;	a drop line electrically connected to a central trunk of the wire harness and configured to receive power from the plurality of solar panels;
a second drop line electrically connected to a central trunk of a second wire harness and configured to receive power from a plurality of solar panels in a second solar array;	a second drop line electrically connected to a central trunk of a second wire harness and configured to receive power from a plurality of solar panels in a second solar array;

[redacted]

a feeder cable, the feeder cable electrically connected to the drop line and the second drop line at a *nexus*; and	a feeder cable **having a larger diameter than the drop lines**, the feeder cable electrically connected to the drop line and the second drop line at a *nexus*; and
a primary mold that fully encases the *nexus* so as to substantially seal the *nexus* from external environmental conditions, **the primary mold further comprising**:	a primary mold that fully encases the *nexus* so as to substantially seal the *nexus* from external environmental conditions.
a first aperture extending completely through the primary mold and having a first diameter, **wherein the feeder cable extends through the first aperture**;	
a second aperture extending partially through the primary mold and having a second diameter smaller than the first diameter, **wherein the drop line extends into the second aperture**; and	
a third aperture extending partially through the primary mold and having a third diameter smaller than the first diameter, **wherein the second drop line extends into the third aperture**	

As the above comparison shows, Mr. Brooks has effectively read out the specific mold structure limitations from the claim. Yet it was the 113-word amendment to mold structure during prosecution of the ’254 patent to include the aperture structure limitations to overcome the prior art and place the ’254 patent claims into condition for allowance.

After Dr. Cameron explained how Mr. Brooks’ theory could not have applied the ALJ’s claim construction, Dr. Cameron explained how she interpreted the ALJ’s construction of the term “aperture” in view of the confusion that had been caused by tying aperture to “drop line”. Tr. (Cameron) at 1089:6-18. Dr. Cameron explained that in the context of the mold structure, an aperture is a 3-D hole (i.e., the entire pathway for a cable in the [undermold / primary mold]) that

exists when viewed when the entire cable has been removed. *Id.* This removed the confusion caused by the term "drop line" which Shoals' own expert, Mr. Brooks, admitted was not a term of art used in the solar industry. Tr. (Brooks) at 494:25-495:17.

Shoals did not challenge Dr. Cameron's interpretation on cross-examination. But when Voltage began asking Shoals' validity expert, Mr. Weiner, to compare Dr. Cameron's interpretation with the construction of aperture that he allegedly applied in forming his opinions, uncertainty from Mr. Weiner and panic from Shoals' counsel ensued. With RDX-0017 (demonstrative showing LiveNote of Dr. Cameron's testimony regarding aperture) displayed, Mr. Weiner was asked if he agreed that Dr. Cameron's interpretation was consistent with the construction of "aperture".

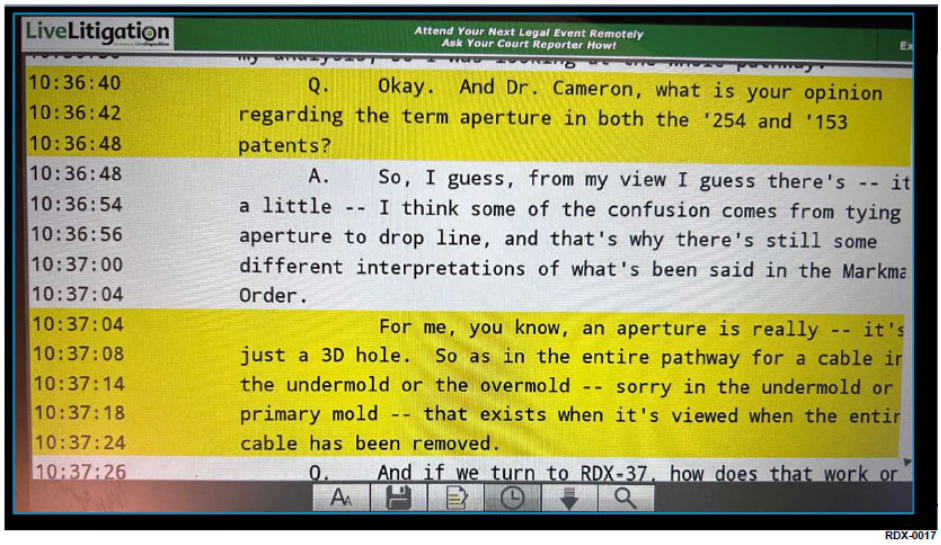

Shoals' counsel tried to shut it down. First counsel interrupted by erroneously objecting that "we're out of time". After counsel was immediately corrected and the objection withdrawn, a different Shoals lawyer quickly objected as outside the scope. Tr. (Weiner) at 1310:5-19. The objection was overruled: "we're going through the terms that he applied in doing his analysis." Tr. (ALJ Bhattacharyya) 1310:20-22. Moments later counsel interrupted again – this time objecting that the question had been asked and answered. Again, the objection was overruled. Tr.

(Shoals' Counsel) 1312:22-25. After three interruptions within five minutes and Mr. Weiner still uncertain as to whether he had any disagreements with Dr. Cameron's interpretation of "aperture", Shoals exclaimed that Voltage was out of time—sparing Mr. Weiner from further examination on his ambiguous understanding of "aperture". Tr. (Shoals Counsel) 1314:10-19.

Dr. Cameron, on the other hand, was very certain. Based on her detailed analysis of the intrinsic record, she provided her opinion as to how a POSA would understand "aperture", which was not challenged by Shoals' lawyers or rebutted by any Shoals expert witness at the hearing. Moreover, Dr. Cameron explained how her understanding was consistent with the ALJ's *Markman* Order, while resolving the confusion created by the different uses of the term "drop line". The claim is directed to a mold structure with specific structural features that can be seen when the underlying cables are removed, such as shown in the images of RPX-0052C (Voltage innermold with insulating and conductive material removed):

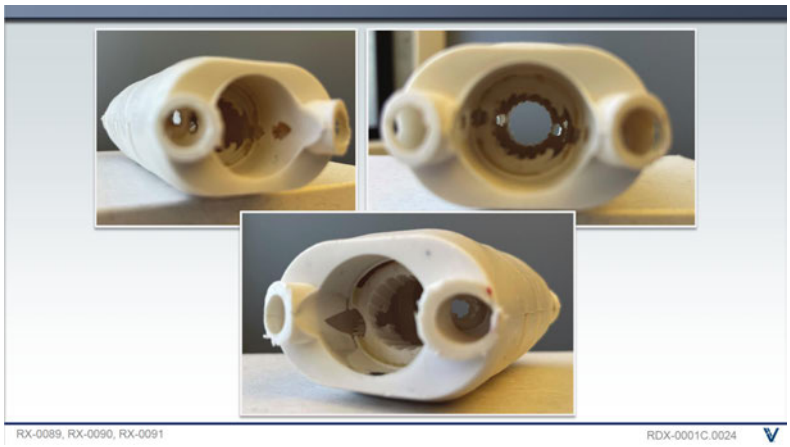

RDX-0001C.0024 (Voltage Opening Slides) (showing RX-0089, RX-0090 and RX-0091).

That specific mold structure requires three apertures—one that extends completely through the mold structure and two more apertures that each only extend partially through the mold structure. Shoals' provisional application, product literature and the '153 patent specification, Figure 7, all show a mold structure with one aperture clearly extending partially through and

another aperture clearly extending completely through, as shown below in RDX-0002C.0010 (Cameron). That is Figure 7.

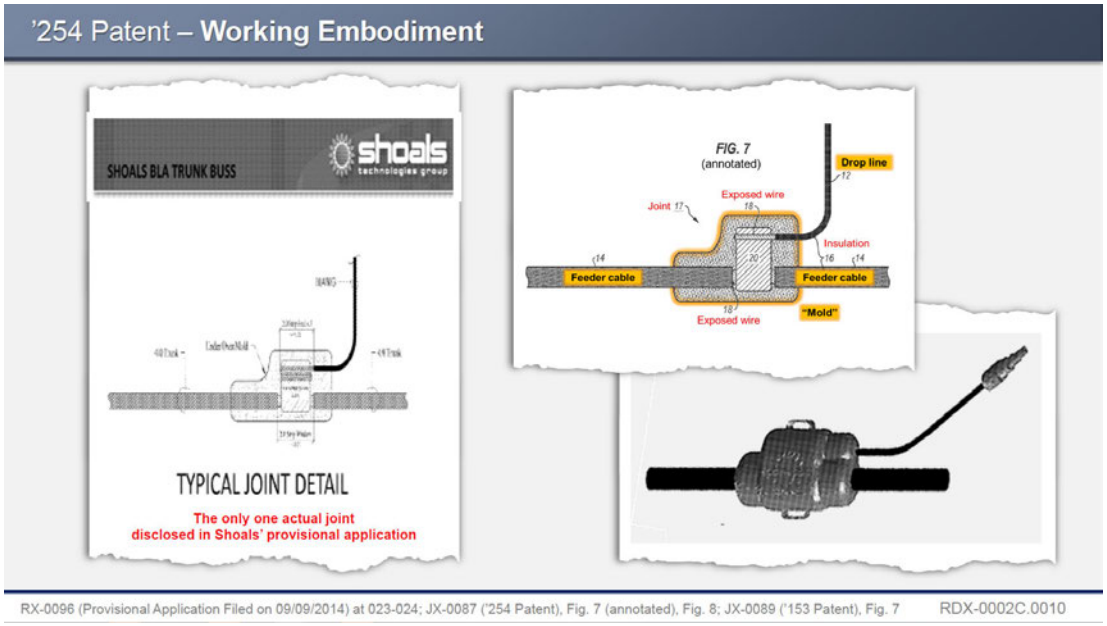

The evidence showed that using the correct interpretation of the term "aperture", Voltage's accused LYNX Trunk Bus configurations do not infringe the '153 Patent and that the Shoals' BLA products that Mr. Brooks presented at the hearing do not practice the '153 Patent. Dr. Cameron analyzed CT scans taken of all of the physical product samples produced in the Investigation, including 15 different configurations produced by Voltage, 3 alternative design product samples imported by Voltage into the United States during the discovery period, and the 4-drop BLA that was produced by Shoals.

While the evidentiary record included discussion of certain BLA configurations that may practice the '153 Patent, Shoals overreached and tried to argue that all of its BLA products practice the '153 Patent. As a result, Shoals necessarily allocated investments in non-practicing DI products, which is fatal to its economic domestic industry as well. This overreach precipitated through Shoals' fact witnesses, causing confusion about how its own documents reference Shoals' BLA. Inconsistencies between Shoals witness testimony and documents repeated throughout the

hearing, undermining the credibility of Shoals' witnesses. For example, Mr. Macias testified that the BLA is not a wire harness, (Tr. (Macias) at 147:20-21), yet Shoals' installation and operating instructions for the BLA Assembly repeatedly refer to the BLA as a wiring harness. RX-0096.022-23; JX-0098.0001, 0006. Mr. Macias also testified that its BLA documentation uses the terms "drop line" and "input leads." Tr. (Macias) at 148:15-150:19. But Shoals' technical expert, William Brooks, who claimed to have reviewed thousands of Shoals documents, could not recall a single instance where Shoals' documents (other than related to patent) used the term "drop line." Tr. (Brooks) at 492:5-10, 492:23-493:9. Indeed, despite all of Shoals' fact witnesses consistently using "drop line" during the hearing, Mr. Brooks confirmed that the term "drop line" was not a term of art in the solar industry. Tr. (Brooks) at 494:25-495:17.

Similarly, Shoals' rebuttal to the evidence presented by Dr. Kenny on invalidity should be given little to no weight. Regarding indefiniteness, the testimony throughout the week from Shoals' own witnesses demonstrated a clear lack of reasonable certainty as to the scope of the 153 patent claims. Indeed, based on the shifting and different "tests" presented by Shoals throughout this investigation alone demonstrates that the claim is indefinite. Notably, Shoals did not even attempt to elicit rebuttal testimony on indefiniteness from its expert, Mr. Weiner. This was not surprising considering Mr. Weiner's uncertainty when being asked basic questions regarding the term "aperture" and whether he had any disagreements with Dr. Cameron's interpretation that she testified to earlier in the day. Dr. Kenny's testimony that it would have been obvious to combine the disclosures of the Shao reference with Yamawaki, and that a POSA would have been motivated to do so, support a finding of no violation based on invalidity as well.

In sum, the evidence presented at the hearing confirms that no 337 violation should be found with respect to Voltage's accused LYNX Trunk Bus products. Voltage's AD Trunk Bus

should also be adjudicated and found to not infringe for additional reasons. The evidence also showed that Shoals failed to establish that all of the BLA products it relied on for domestic industry practice the '153 patent. While some configurations—[redacted]—may practice the 153 patent, Shoals failed to distinguish between practicing and non-practicing BLAs. That overreach doomed its technical prong, as well as its economic prong, for purposed of establishing a domestic industry in this Investigation.

A. Procedural History

This investigation was instituted upon publication of the Commission's Notice of Investigation in the *Federal Register* on Friday, June 9, 2023. 88 Fed. Reg. 37905-906. On June 28, 2023, Complainant filed a Motion to Amend the Complaint to Add U.S. Patent No. 11,689,153 to the investigation. Motion No. 1365-002. On July 18, 2023, the ALJ issued an Initial Determination granting the motion to amend. Order No. 5. The same day, an Initial Determination issued setting a target date for November 12, 2024. Order No. 6 at 2.

A *Markman* hearing was held on December 13, 2023.

On February 9, 2024, the ALJ issued an Initial Determination granting Complainant's Unopposed Motion for Partial Termination by Withdrawal of Certain Claims. Order No. 15. (EDIS Doc. ID 813762).

On February 16, 2024, the ALJ issued a *Markman* Order. Order No. 16.

On February 28, 2024, the ALJ issued an Initial Determination granting Complainant's Unopposed Motion for Partial Termination by Withdrawal of Certain Claims, terminating the 254 Patent from the Investigation. Order No. 19. (EDIS Doc ID 815078).

On March 6, 2024, the ALJ issued an Initial Determination granting Respondents' motion for summary determination of no domestic industry under the technical prong for the '739 Patent. Order No. 20. (EDIS Doc. ID 816220).

The prehearing conference was held on March 15, 2024 and an evidentiary hearing on the '153 Patent was held during the week of March 18-22, 2024.

The initial determination on alleged violation of section 337 is due by July 12, 2024.

B. The Parties

1. Complainant Shoals

Complainant Shoals Technologies Group, LLC ("Shoals") was founded in 1996 by Dean Solon, the sole named inventor of the remaining asserted '153 Patent. In 2014, Mr. Solon filed a provisional application, and in 2015, patent application that issued nearly six years later in April 2021 as the '254 Patent. Before issuance, Shoals filed a continuation application that issued in June 2023 as the '153 Patent.

2. Voltage Respondents

Voltage LLC is based in Chapel Hill, North Carolina and specializes in providing wiring solutions to the solar industry. Tr. (Ge) at 899:14-18. . It started as a distributor of cables in the United States, ,and over time, began expanding its product offerings to customers in the United States, including its Trunks bus solution. Tr. (Ge) at 903:14-904:24. Voltage differentiates itself in the solar industry with cutting edge technology, including preparing 3-dimensional renderings of project sites that help reduce wasted cable and using virtual reality to train installation crews before visiting a solar site (*see* Tr. (Ge) at 899:19-902:24, 909:8-910:14; RDX-0009 (3-D rendering demonstrative video); RDX-0010C (Virtual Reality demonstrative video)). In about April 2021, Voltage built its own manufacturing facility in Ningbo, China. Tr. (Ge) at 906:3-10.

Through its development and growth, Voltage has continued to innovate. Tr. (Ge) at 906:16-21; 908:2-8.

C. Overview of the Technology

The technology of the ’153 patent concerns the electrical components used to transfer current generated by solar cells to an electrical grid. In a solar cell installation, each solar cell generates a DC (direct current) current that is routed to what is referred to as an “inverter.” Inverters are then used to convert the DC current generated by the solar cells into AC (alternating current) current, which is the type of current that is suitable for distribution and use in the modern power grid.

The technology at issue in this investigation relates specifically to the components used to route the electric current produced by solar panels to the inverter and which are collectively referred to as “electrical balance of system” (EBOS) components. Tr. (Macias) at 104:22-105:1, 107:18-23; Tr. (Weiner) at 1262:8-13; Tr. (Brooks) at 384:13-19, 499:25-500:9; Tr. (Kenny) at 1185:14-1186:2, 1220:22-1221:2; Tr. (Tolnar) at 292:14-293:6. As Dean Solon, the sole named inventor of the ’153 patent, explained, his invention was ‘combin[ing] all those strings on to one common cable and went from a 64-channel combiner box to a 16-channel combiner box.” JX-0217C (Dep. Tr. (Solon)) 104:20-105:21; Tr. (Solon Dep. Video Clip) at 377:21-378:11. Shoals’ September 2014 provisional application to which the ’153 patent claims priority also refers to Shoals’ commercial embodiment as the “BLA,” (the Big Lead Assembly) describing it simply as a wire harness “on a much larger scale.” RX-0096.022-23. *See also* Tr. (Tolnar) at 315:7-8 (“The BLA is a larger harness, so it is a larger harness.”); Tr. (Tolnar) at 314:10-315:8, 370:20-371:21. *But see* Tr. (Tolnar) at 365:11-366:2; Tr. (Macias) at 147:20-21 (Shoals’ CRO stating that BLA is not a wire harness), 155:13-21 (agreeing that both wire harness and the BLA combines current

[redacted]

together). Apart from the esoteric "EBOS" nomenclature, the invention of the '153 patent is, as Shoal's own expert admits, a "simple" one: it is simply about wiring. Tr. (Weiner) at 1301:9-16; *see also* Tr. (Tolnar) at 225:16-226:25.

SHOALS BLA TRUNK BUSS

The Shoals BLA Trunk Buss negates the need for deploying combiner boxes into the solar field by incorporating a proprietary "T" into the existing DC feeder cables needed onsite. This pre-manufactured harness offers a significant cost savings both in initial product cost as well as in the realized labor savings due to its ease of implementation. This system utilizes the same under/overmold construction currently deployed in the field today, but on a much larger scale.

RX-0096.022.

Comparing Figures 1 and 4 of the '153 patent, which reflects that the difference between the prior art and the '153 patent invention is the electrical wiring between the solar panels 30 and the inverter 38 affirms that the technology is squarely focused on the electrical wiring—and not any photovoltaic operation. JX-0089, Figs. 1, 4 (*see also id*. Figs. 2-3, also depicting other prior art electrical wiring systems); *see* Tr. (Cameron) at 1066:25-1068:10; Tr. (Kenny) at 1175:24-1176:9. Even the claimed molding and the apertures over which so much ink has been spilt is not of any specific complexity; Shoals' own witnesses explain that it is formed simply by covering an electrical junction(s). Tr. (Tolnar) at 232:16-233:17; 266:8-20 ("so the BLA allows the connections to be made rather than stripping, crimping, terminating every wire. It's a plug-and-play connection in the solar field itself."); *see also id*. at 368:23-369:6; 370:4-372:7; 373:7-375:15. In essence, the invention – and its benefits – is the same sort of electrical connection that wiring technicians had been making for years, but in a pre-made solution. Tr. (Tolnar) at 266:20-269:12; 301:2-4; 305:4-15; 306:11-21; 314:23-316:11.

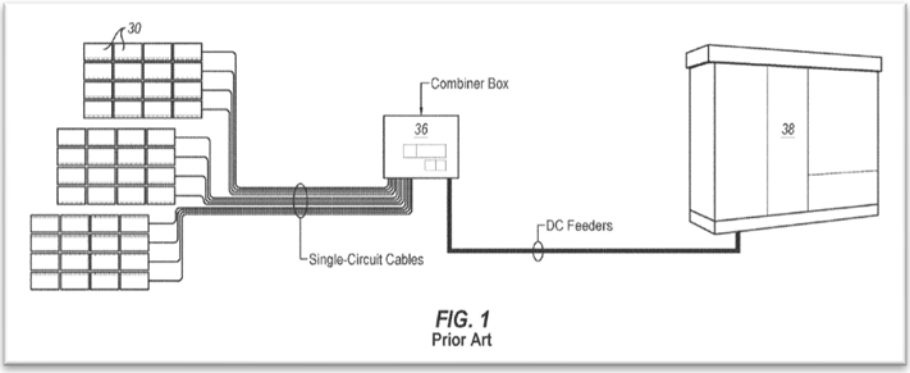

FIG. **1** depicts a conventional wiring configuration with each solar panel individually wired to a central combiner box;

JX-0089, Fig. 1, 2:21-23.

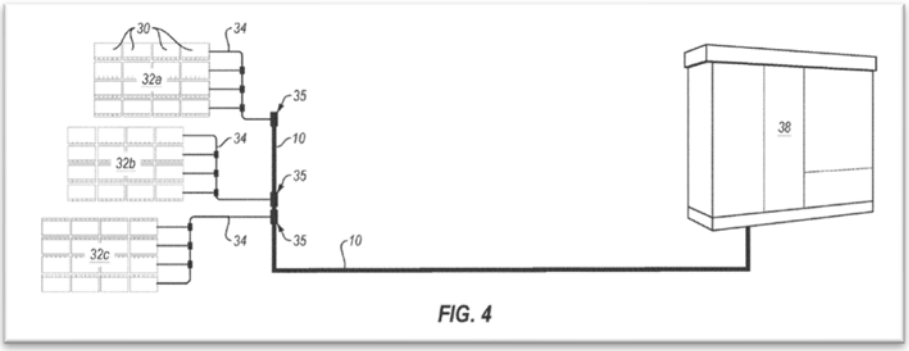

FIG. **4** schematically represents a system of the present invention;

JX-0089, Fig. 4, 2:32-33.

D. The Patent at Issue – U.S. Patent No. 11,689,153

The ’153 patent is entitled “Lead Assembly for Connecting Solar Panel Arrays to Inverter.” JX-0089.0002. The ’153 patent issued on June 27, 2023 from a continuation application to the ’254 patent filed shortly before the ’254 patent issued. JX-0089.0002 (’153 Patent); JX-0087.0002 (’254 Patent); JX-0088 (’153 Patent File History). Dean Solon is listed as the sole inventor of both the ’254 and ’153 patents. JX-0087.0002; JX-0089.0002. The ’254 and ’153 patents share a specification for the most part. *Compare* JX-0087, at 1:58-61 (“a lead assembly including at least

one drop line joined to a feeder cable at a **compression lug**") (emphasis added), *with* JX-0089, at 1:63-66 ("a lead assembly including at least one drop line joined to a feeder cable at a **nexus**") (emphasis added).

Shoals asserts Claims 1, 11-14, 18, 21, 23, and 24 of the '153 patent against the Voltage Respondents. Claims 1, 21, and 24 are independent claims. Claim 1 and Claim 21 are similar in most respects, but Claim 1 requires both an undermold and overmold, while Claim 21 only requires a "primary" mold. Asserted dependent Claim 23, which depends from Claim 21, adds a "secondary" mold where the primary and second mold form the undermold-overmold interface also recited in Claim 1. Claims 1 and 21 are reproduced below as representative:

Claim 1	Claims 21, 23
1. A lead assembly for use in a solar energy installation including: a drop line terminating at a drop line connector, the drop line connector configured to connect with a central trunk of a wire harness, the central trunk of the wire harness having a plurality of branches that each are configured to electrically connect to a separate solar panel contained in an array of a plurality solar panels; a feeder cable electrically coupled to the drop line at a nexus; an undermold that fully encases the nexus, the undermold further comprising: a first aperture extending completely through the undermold and having a first diameter, wherein the feeder cable extends through the first aperture along a first longitudinal axis; and a second aperture extending partially through the undermold and having a second diameter different than the first diameter, wherein the drop line extends from the second aperture along a second longitudinal axis;	21. A solar power system comprising: a plurality of solar panels each electrically coupled to one of a plurality of branches of a wire harness to form a first solar array; a lead assembly comprising: a drop line electrically connected to a central trunk of the wire harness and configured to receive power from the plurality of solar panels; a second drop line electrically connected to a central trunk of a second wire harness and configured to receive power from a plurality of solar panels in a second solar array; a feeder cable, the feeder cable electrically connected to the drop line and the second drop line at a nexus; and a primary mold that fully encases the nexus so as to substantially seal the nexus from external environmental conditions, the primary mold further comprising: a first aperture extending completely through the primary mold and having a first

[redacted]

a third aperture extending partially through the undermold and having a third diameter different than the first diameter, wherein a second drop line extends from the third aperture along a third longitudinal axis; and an overmold surrounding the undermold and forming an undermold-overmold interface at an outer surface of the undermold.	diameter, wherein the feeder cable extends through the first aperture; a second aperture extending partially through the primary mold and having a second diameter smaller than the first diameter, wherein the drop line extends into the second aperture and a third aperture extending partially through the primary mold and having a third diameter smaller than the first diameter, wherein the second drop line extends into the third aperture. 23. The solar power system of claim 21, further comprising a secondary mold surrounding the primary mold and forming an undermold-overmold interface at an outer surface of the primary mold.

Representative claims 1 and 21 both claim lead assemblies that connect with wire harnesses that are coupled to solar panels. JX-0089, 6:50-7:12, 8:5-33 (claims 1, 21). Neither claim involves any photovoltaic elements apart from connecting to solar panels, and instead focus on the lead assembly that routes current from the solar panels through the wire harnesses. *Id.* Figure 4, as annotated below, depicts the claimed wire harnesses and lead assemblies connected to the solar panels. Tr. (Kenny) at 1179:4-1178:13; JX-0089, Fig. 4, 2:21-23, 2:32-33, 6:50-7:12, 8:5-33 (claims 1, 21). In essence, the wire harness combines current from solar panels in a first stage, and the lead assembly combines current from those wire harnesses in a section stage in the same fashion as the wire harnesses. *Id.*; Tr. (Cameron) at 1049:15-1050:7; *see also* RX-0096. The claims themselves focus on the electrical junctions in the lead assembly where drop lines are electrically connected to a feeder cable, and molding through which there are apertures through which the drop lines and feeder cable are run. JX-0089, at 6:50-7:12, 8:5-33 (claims 1, 21).

[redacted]

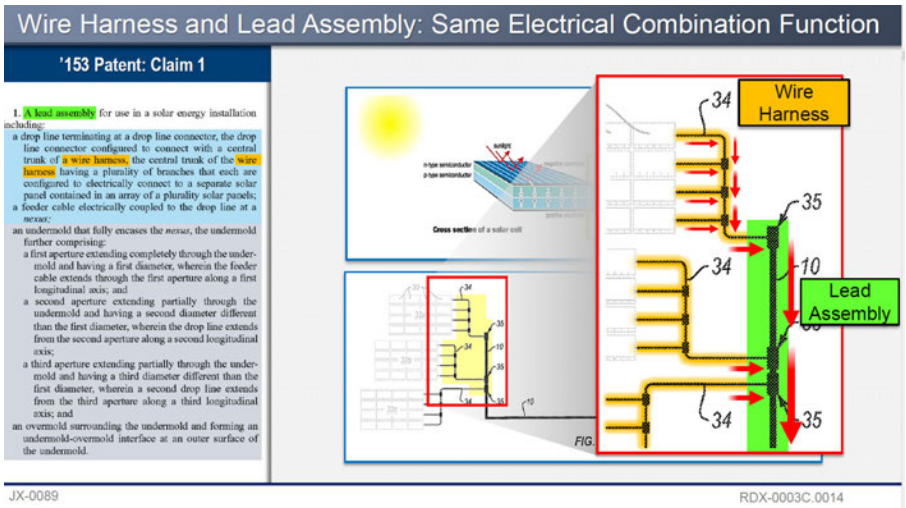

RDX-0003.0014 (citing JX-0089, 6:50-7:12, Fig. 4.)

There should be no dispute that the invention claimed in the '153 patent is a simple one: it is little more than a junction of electrical wires covered by molding. Tr. (Kenny) at 1169:11-1171:11. As Dr. Kenny detailed at the evidentiary hearing, claim 1 (and all the independent asserted claims) of the '153 patent's first few limitations (in blue, as depicted on RDX-0003.006, below) relate to electrically coupling wires, while its latter limitations relate to molding (in grey, as depicted on RDX-0003.006). *Id.* And although the claims recite limitations that limit the application of such molded electrical junctions to use in the solar power field, the only recitation of photovoltaic technology at all are the solar panels, which serve as little more than sources of

current. Tr. (Kenny) at 1175:24-1176:9. The substance of the claim is directed to just two concepts: an electrical junction, and molding surrounding it. Tr. (Kenny) at 1169:21-1171:11.

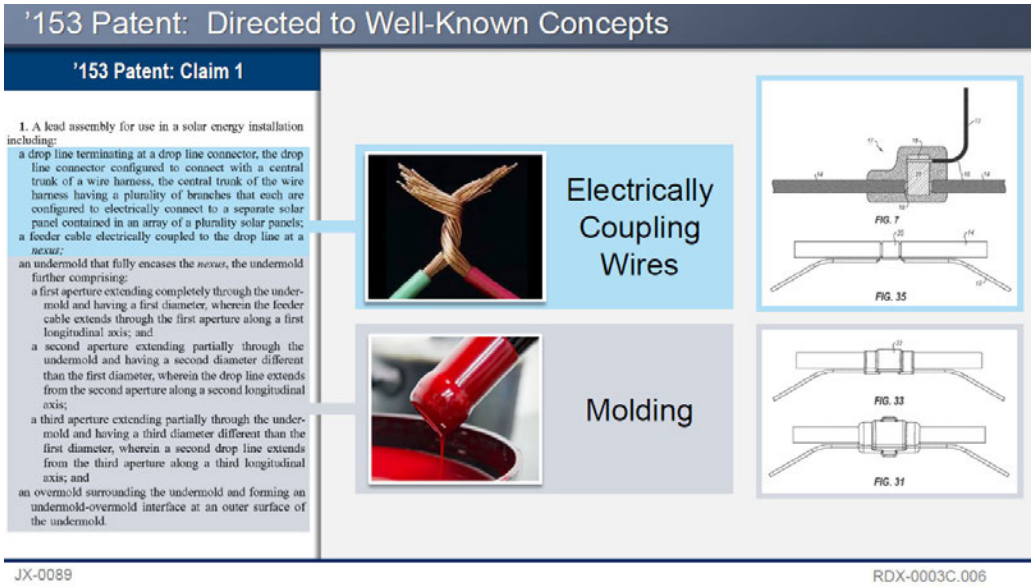

Neither of these concepts are new. Tr. (Kenny) at 1171:12-1173:12. The "invention" of the '153 patent is simply a combination of existing and well-known elements in a way that performed no more than their conventional functions. Examples of electrical coupling, and even electrical coupling with molding over it, precede the '153 patent by several decades. Tr. (Kenny) at 1171:12-1173:12. *See also* Tr. (Tolnar) at 314:8-9, 315:9-19, 316:2-11 (Mr. Tolnar agreeing that Shoals did not invent wire harnesses, crimping wires or compression lugs, molding for electrical cable junctions).

[redacted]

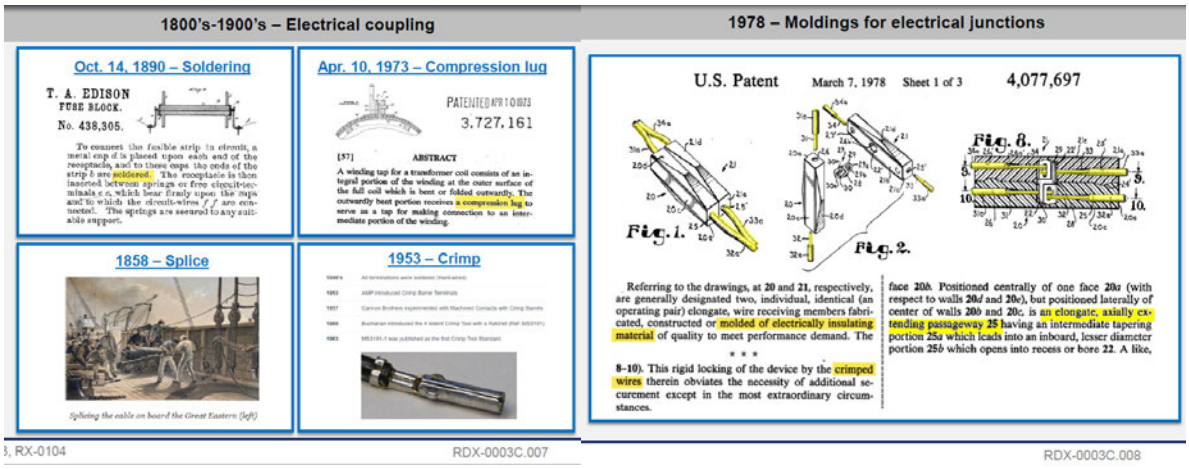

RDX-0003.007-008 (citing RX-0117, RX-0115, RX-0111, RX-0103, RX-0104, RX-0116).

Further underscoring the generic and conventional nature of the invention, the '153 patent's predecessor, the '254 patent, took nearly six years to prosecute, and it was only allowed after applicant accepted (with no comment) an examiner-proposed 113-word amendment specifying particular orientations and diameters of apertures for the feeder cable and drop lines. Tr. (Kenny) at 1189:13-1190:1; Tr. (Cameron) at 1057:20-1058:17; JX-0085 ('254 Patent File history), *passim*; JX-0085.0306-26. The issued '153 patent claims were themselves also subject to multiple rejections until, to overcome a rejection over a prior art combination of U.S. Patent No. 6,268,559 to Yamawaki and U.S. Patent No. 3,852,516 to Vander Ploog, the Examiner identified allowable subject matter in then-pending dependent claims. JX-0088.0079-85, 0122-29, 0247-58, 0270-84; *see also* Tr. (Kenny) at 1202:7-12; Tr. (Cameron) at 1062:9-1063:10. The allowable subject matter added by those then-pending dependent claims that resulted in allowance was the simple and straightforward addition of a second drop line and the associated third aperture (the first aperture being associated with a feeder cable, and second aperture being associated with the first drop line), which was not disclosed by Vander Ploog. JX-0088.0255.

[redacted]

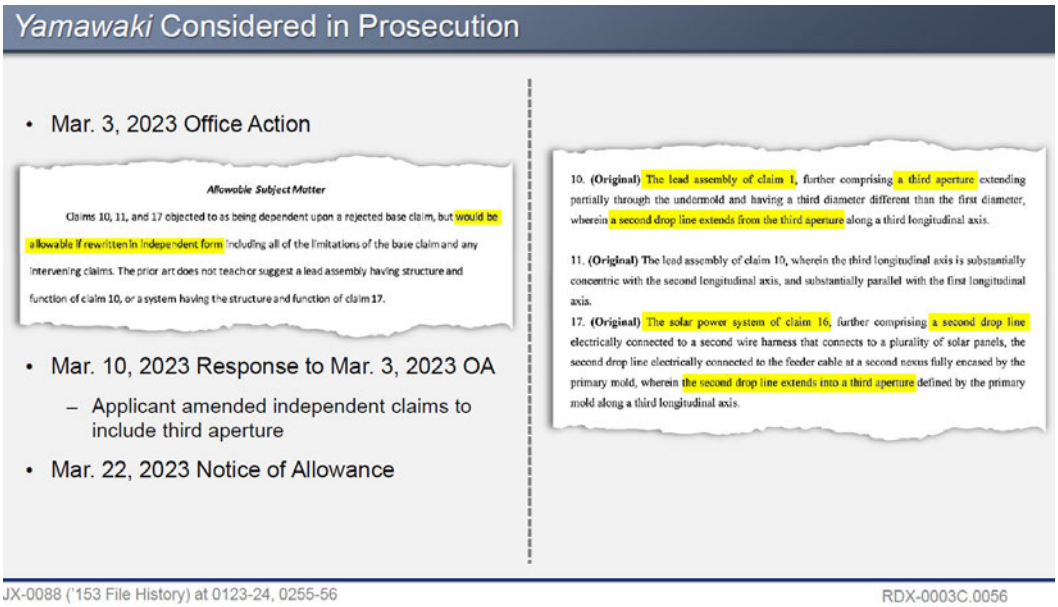

RDX-0003.0056 (citing JX-0088.0255, 0269-77, 0283, 0123-24).

The applicant, represented by the same firm as litigation counsel, Maschoff Brennan, accepted the Examiner's suggestion without comment. JX-0088.0269-77. Thus, it was the addition of the second drop line / third aperture that allowed the '153 patent to issue over the combination of Yamawaki and Vander Ploog, with the examiner finding that Vander Ploog did not disclose a second drop line and third aperture. Accordingly, the issued claims of the '153 patent are all directed to an electrical junction that electrically couples a feeder cable and two drop lines covered by molding. JX-0089, at 6:50-7:12, 8:5-33, 8:43-9:4 (claims 1, 21, 24).

E. The Level of Skill of One of Ordinary Skill in the Art (POSA)

1. Shoals' Challenge against Dr. Kenny's qualification as a POSA

As highlighted in Shoals' motion *in limine* No. 4 and raised during the evidentiary hearing, the parties' proposed levels of ordinary skill in the art differ as to the requisite subject matter experience. Order No. 26, at 3. Respondents and Staff's proposals require subject matter knowledge in the area of "electrical wiring and connectors" (Respondents) or "electrical wiring and associated fuses, connectors, and moldings" (Staff). Order No. 16 at 11; *see also* Tr. (Cameron)

at 1066:25-1068:10; Tr. (Kenny) at 1184:2-1186:15. Shoals, in contrast, requires experience "working with photovoltaic systems, and who has an understanding of … EBOS … for industrial solar power installations." Order No. 16 at 11. The Markman order in this Investigation considered that the parties at that time "have not identified any meaningful dispute regarding the level of ordinary skill in the art," and as a result adopted a level of ordinary skill that appears to combine the requisite subject matter experience from the parties, requiring experience in both "photovoltaic systems and electrical wiring." *Id*. at 12.

Shoals' own expert calls Shoals' BLA as "a simple product." Tr. (Weiner) at 1300:18-1301:9-16. Yet Shoals' motion *in limine* No. 4 disputed whether Professor Thomas Kenny—a 30-year professor of engineering in the mechanical engineering department at Stanford University with a Ph. D. in physics from the University of California, Berkeley—meets the standard of one of ordinary skill in the art for what Shoals' own expert calls a simple technology. Order No. 26, at 1; Tr. (Weiner) at 1300:18-1301:9-16. In view of this dispute, this Court found "that a more detailed consideration of the definition of a POSA is warranted," and advised that the parties "should address this issue in post-hearing briefs . . . ." Order No. 26, at 3.

The several levels of skill of one of ordinary skill in the art that have been proffered by the parties in this Investigation are summarized in the Markman Order (Order No. 16), as depicted below. RDX-0003.0019 (citing Order No. 16, at 11-12).

[redacted]

Person of Ordinary Skill in the Art

Markman Order	Respondents' Contention	Staff's Contention	Complainant's Contention
at least a bachelor's degree in mechanical or electrical engineering or a related scientific field and at least two years experience working with photovoltaic systems and electrical wiring, with recognition that more education could substitute for experience and that experience combined with training could substitute for formal education.	at least a bachelor of science degree in electrical engineering, mechanical engineering, chemistry, materials science and engineering, or an equivalent, and two years of academic or professional experience involving electrical wiring and connectors. Lack of professional experience could be substituted by additional education, and vice versa	at least a bachelor's degree in engineering or a related scientific field with at least one year of studying or working with (which could include designing) electrical wiring and associated fuses, connectors, and moldings. Additional work or research experience can substitute for less or different education and professional experience, and vice versa	at least a four-year degree in mechanical or electrical engineering or a related scientific field, and at least two years of experience working with photovoltaic systems, who has an understanding of EBOS for industrial solar power installations—allowing that additional, specialized education could compensate for less experience, and vice versa

Order No. 16 (*Markman* Order) at 11-12. RDX-0003C.0019

A person of ordinary skill in the art ("POSA") is a hypothetical person who is presumed to have known the relevant art at the relevant time. A non-exhaustive list of factors that may be considered in determining the level of ordinary skill in the art may include: "(1) the educational level of the inventor; (2) type of problems encountered in the art; (3) prior art solutions to those problems; (4) rapidity with which innovations are made; (5) sophistication of the technology; and (6) educational level of active workers in the field." *Best Med. Int'l, Inc. v. Elekta Inc.*, 46 F.4th 1346, 1353 (Fed. Cir. 2022). In a given case, every factor may not be present, "and one or more of them may predominate." *Id. See also Custom Accessories, Inc. v. Jeffrey-Allan Indust., Inc.,* 807 F.2d 955, 962, 1 USPQ2d 1196, 1201 (Fed. Cir. 1986); *Environmental Designs, Ltd. v. Union Oil Co. of California,* 713 F.2d 693, 696, 218 USPQ 865, 868 (Fed. Cir. 1983).

As discussed in the overview of the technology and the summary of the '153 patent *supra*, the technology at issue in this investigation specifically relates to the components used to route the electric current produced by solar panels to the inverter where DC current is converted to AC

current. The ’153 patent specification and claims both reflect that the substance of the patents is focused on the electrical junctions (and molding covering those junctions), and not the operation of photovoltaic cells. Tr. (Kenny) at 1175:24-1176:9; 1249:24-1250:15. At most, the claims recite solar panels as sources of current routed via wire harnesses to the claimed lead assembly, but the claims otherwise do not involve photovoltaic-specific technology. *Id.*

Further, contrary to Shoals’ characterization in its pre-hearing brief that “the parties disagree more about what ‘the art’ is than about the ‘level of ordinary skill’ a POSA should have,” (Shoals’ Pre-Hr’g Br. at 18-19), from the evidentiary hearing, the parties appear to generally *agree* that the relevant technology of the ’153 patent is EBOS componentry, and in particular, electrical wiring, junctions, and connectors. As Shoals’ own witnesses explained, EBOS refers to “the electrical componentry that is needed to take the power from the solar panels to the inverter . . .” (Tr. (Macias) at 104:22-105:1), which starts “from the back of the glass of the solar panels all the way to the point of connection with the utility grid, not including the inverter.” Tr. (Weiner) at 1262:9-13; Tr. (Brooks) at 384:13-19, 499:25-500:9; *see also* Tr. (Kenny) at 1185:14-1186:2; 1220:22-1221:2; Tr. (Macias) at 107:18-23, 167:12-20.

Thus, in Respondent’s view, although the claimed invention is used as a component in solar power installations, the claimed technology is focused on the routing of electrical current, rather than, for example, the photovoltaic phenomena that generates current from photons acting on solar panels. Tr. (Kenny) at 1169:23-1170:15. Accordingly, the relevant requisite subject matter experience one of ordinary skill in the art would possess is in electrical wiring and connectors (potentially with any associated fuses, connectors and moldings, as Staff suggests).[1]

[1] However, even if the photovoltaic portion of the system were included within the requisite realm of experience, Dr. Kenny has more than sufficient experience, which includes, as part of his education in physics, related courses and use of related semiconductor devices in which electrons flow through band structures in which energy can be applied through photons or other means to

Shoals nonetheless aims to impose a narrow scope of relevant expertise of "two years of experience working with photovoltaic systems," and further, "an understanding of EBOS for industrial solar power installations." Order No. 16, at 11. Shoals also does not allow for more general education to substitute for experience, but instead requires that "additional specialized education could compensate for less experience." *Id.* Ultimately, Shoals' position is that the relevant art for which one of ordinary skill in the art must have experience in is that of "utility-scale photovoltaic EBOS." Pre-Hr'g Br. at 19. Notwithstanding its assertions, Shoals has identified nothing about the claims or technology that would be outside the understanding of an individual with two years of academic or professional experience involving electrical wiring and connectors, or further, why Dr. Kenny—with a Ph. D. in physics and 30 years of experience as a professor of engineering in a mechanical engineering department teaching academic and practical courses, including one that involves constructing a robot that requires designing and making battery and wiring systems to power their robots, and has worked on semiconductor devices in his research at Stanford for 30 years (which photovoltaic devices are)—would not be able to understand the '153 patent invention. *See* Tr. (Kenny) at 1165:9-1167:25; 1186:23-1187:23. *See also* Tr. (Tolnar) at 332:5-18 (Mr. Tolnar confirming that Shoals' BLA products mostly relate to "mechanical, material science.").

2. Shoals proposed an unduly narrow definition of POSA

The primary thrust of Shoals' dispute appears to be that one of ordinary skill in the art must have experience with EBOS for "utility scale" solar power installations. *See* Order No. 16, at 11. Although Shoals' validity expert, Mr. Weiner, initially stated during the evidentiary hearing that

---

excite carriers over certain barriers to make them available for extraction as a source of energy. Tr. (Kenny) at 1186:12-1187:11. The semiconductor physics of photovoltaic technology has been in the middle of the Ph.D. work that Dr. Kenny has worked on in his research at Stanford for 30 years. *Id*. And it should not be disputed that solar technology does not fall outside the realm of physics. Tr. (Kenny) at 1249:8-13.

the ’153 patent “definitely” falls within the utility-scale category of solar installations, he could not provide any reasoning or support for his conclusion. Tr. (Weiner) at 1264:2-5. Nowhere in the claims of the ’153 patent is there any limitation that limits application of the claims of the ’153 patent to “utility scale” solar installations. To the contrary: each of the independent claims of the ’153 patent broadly claim “[a] lead assembly for use in a solar energy installation . . . .” (claim 1), “[a] solar power system . . .” (claim 21) and “[a] solar power system.” (claim 24). JX-0089, 6:50-7:12, 8:5-33, 8:43-9:4 (claims 1, 21, 24). Mr. Weiner eventually recognized and agreed that the ’153 patent claims do not require “utility-scale solar installations,” and admitted that an EBOS solution does not need to be used in a utility-scale solar installation in order for it to meet the ’153 patent claims—it need only be in a solar installation; “it doesn’t have to be utility-scale.” Tr. (Weiner) at 1299:13-22; *see also* Tr. (Kenny) at 1219:10-19.

The prosecution history supports that the ’153 patent claims do not require utility-scale installations. During the prosecution of the ’254 Patent, the examiner rejected the applicant’s amendment to add a limitation that the claimed lead assembly “is suitable for utility-scale installations” to the independent claims under 35 U.S.C. §§ 112(a), (b). JX-0085.0270, 0272, 0286-87. The examiner rejected the claim with the phrase “is suitable for utility-scale installations” for failing to comply with the written description requirement finding that a POSA “would not inherently understand that the lead assembly of the disclosure is suitable for utility-scale installations.” JX-0085.0286. The examiner rejected the claim for indefiniteness finding that there is insufficient description to establish that a lead assembly that is capable of carrying 30 amps in current and maintaining a voltage of 1500 VDC is inherently suitable for utility-scale installations. JX-0085.0287. “Put another way, the examiner does not understand ‘suitable for utility-scale installations’ to be a commonly used term of the art with a definite meaning that clearly describes

what is included and excluded by the phrase." *Id*. The amendment following this rejection was the amendment with the addition of the 113-word phrase and the deletion of "and is suitable for utility scale installations," all without any further explanation by the examiner or the prosecuting attorney. JX-0085.0310-12.

During prosecution of the '153 patent, the prosecuting attorney, Shoals' counsel in this proceeding, did not make any argument limiting the '153 patent to "utility-scale solar installations." JX-0088. Moreover, the prosecuting attorney never objected to the examiner's rejection based on prior art in non-solar related classifications such as the H01R classification ("Electrically-Conductive Connections; Structural Associations of a Plurality of Mutual-Insulated Electrical Connecting Elements; Coupling Devices; Current Collectors") or H02G classification ("Installation of Electric Cables or Lines, or of Combined Optical And Electric Cables or Lines"). JX-0088.0075-95, 0121-29, 0246-62, 0269-77. This prosecution history reflects both the examiner's and applicant's understanding that the relevant art includes electrical connectors, irrespective of their relation to solar power, in contrast to Shoals' litigation position now. Thus, Shoals' narrow definition of POSA is entirely inconsistent with its own prosecution of the '153 patent.

Even if the claims of the '153 patent were somehow limited to utility-scale photovoltaic EBOS systems (no party has proposed any such construction and Shoals' expert admits they are not so limited), Shoals identifies no reason that experience with utility-scale photovoltaic EBOS would afford some understanding beyond the ken of an individual with knowledge and understanding of electrical wiring and connectors required to understand the '153 patent invention. Shoals' expert at best identifies what is different about "utility-scale" photovoltaic systems: they are bigger and supply more power (Tr. (Weiner) at 1260:5-23), they may be in the middle of

nowhere (*id.*), they may operate under different regulatory schemes (*id*. at 1260:24-1261:17), and that their solar arrays are very uniform and standard (*id*. at 1273:8-17). But Shoals never identifies what greater or different understanding experience in utility-scale photovoltaic EBOS would afford as a result of such differences, let alone how that might affect an understanding of the '153 patent, or why this is some specialized understanding outside of one having two years of experience in electrical wiring and connectors.

To re-emphasize, as Mr. Weiner himself admits, the technology of the '153 patent is a simple one. Tr. (Weiner) at 1301:9-16. It does not involve photovoltaic phenomena, nor does it require experience in the photovoltaic systems industry to understand, and Shoals has provided no reasoned basis for its unduly narrow definition of one of ordinary skill in the art. The technology of the '153 patent is that of electrical wiring and connectors and the Court should adopt Respondent's proper understanding of the level of skill of one of ordinary skill in the art.

While Voltage does not agree with Shoals' narrow definition of POSA for a patent involving such a simple technology, it should be noted that if the ALJ were to strictly apply Shoals' definition of POSA, Mr. Weiner himself may not qualify as a POSA even under Shoals' own definition. Shoals requires that a POSA should have "at least a bachelor's degree in mechanical or electrical engineering or a related scientific field." Order No. 16, at 11. Mr. Weiner, however, has a bachelor's degree in astrophysics and astronomy, and only a minor in physics. Tr. (Weiner) at 1257:15-19. Neither Shoals nor Mr. Weiner presented any evidence demonstrating how Mr. Weiner's degree in astrophysics and astronomy is in relevant field or otherwise how his experience and training could substitute for the requisite formal education. Indeed, that Mr. Weiner struggled to answer Staff's questions relating to SDX-0003 of the annotated Figure 35 from the '153 Patent with Dr. Kenny (Tr. (Weiner) 1316:22-1317:20) or explain whether he agreed with Dr. Cameron's interpretation of "aperture" presented the morning before he testified ((Tr. (Weiner) 1304:22-1314:19) is illuminating as to his qualifications to offer opinions from the perspective of a POSA in this Investigation.

[redacted]

F. The Products at Issue

1. Shoals' Domestic Industry Products

At the evidentiary hearing, Shoals presented its Big Lead Assembly (BLA) as its domestic industry product. Order No. 28 found that Shoals' expert, Mr. Brooks, did not provide a representative product opinion in his expert report, and was precluded from providing one at the evidentiary hearing. As a result, Shoals attempted to elicit evidence of representativeness from its fact witnesses, but the evidence shows that Shoals fell well short of meeting its burden. As explained *infra* Section V.A., while some of Shoals BLA configurations may have been shown to practice the '153 Patent, Shoals overreached and continued—including through the evidentiary hearing—to claim that all of its "BLA assemblies" practiced the patent.

2. Voltage's Accused LYNX Trunk Bus and AD Trunk Bus Products

During discovery, Voltage produced documents and physical product samples of its various LYNX Trunk Bus configurations ("Voltage Accused Trunk Bus products"). As explained *infra* Introduction, the evidence presented at the hearing showed vast differences between Voltage's LYNX Trunk Bus and Shoals' BLA.

During fact discovery, Voltage disclosed several modifications that could be made to its existing LYNX Trunk Bus configurations to further differentiate them from Shoals' asserted '254 and '153 Patent claims. These modifications included [redacted] Physical samples in a mid-production and complete production stage were also imported and produced during fact discovery [redacted]

RPX-0038C; RPX-0039C	RPX-0040C; RPX-0041C	RPX-0042C; RPX-0043C

At the hearing, Shoals offered the opinions of Mr. Brooks that the Voltage AD Trunk Bus infringed the asserted claims of the ’153 Patent and Voltage’s expert, Dr. Cameron, presented rebuttal testimony demonstrating why the Voltage AD Trunk Bus does not infringe for additional reasons.

II. JURISDICTION AND IMPORTATION

A. Jurisdiction

Personal Jurisdiction. Respondents do not dispute the Commission’s personal jurisdiction over them this investigation, as they have answered the Complaint and Notice of Investigation, participated in discovery, appeared at hearings, and filed motions and briefs.

In rem jurisdiction. Respondents do not dispute the Commission’s *in rem* jurisdiction over certain accused products by virtue of their importation into the United States. Respondents have

stipulated to the importation of certain Accused Products and do not dispute that the importation requirement is satisfied for these products. *See* EDIS DocID 814046 (Voltage stipulation). Shoals has stipulated that Voltage has imported its alternative designs. *See* EDIS DocID 814046 at ¶¶ 3, 6. Voltage has not imported certain LYNX Trunk Bus products accused of infringing the '153 patent since it issued on June 27, 2023, so the Commission does not have *in rem* jurisdiction over those products. JX-0191C; *see also* JX-210C (Ge) at 199:20-200:10.

B. Importation

Shoals and Voltage have entered into a stipulation in which Voltage does not contest importation and Shoals does not contest the lack of inventory and agrees not to seek a cease and desist order. Voltage therefore does not dispute that the importation requirement within the meaning of 19 U.S.C. § 1337(a)(1)(B) is satisfied for this Investigation. *See* EDIS DocID 814046 at ¶¶ 3, 6.

III. U.S. PATENT 11,689,153 – CLAIM CONSTRUCTION

A. *Markman* Order No. 16

After the private parties filed their pre-hearing briefs, a *Markman* Order issued on February 16, 2024. Order No. 16. For the '153 Patent, the *Markman* Order construed the following terms, summarized below:

Claim Term	ALJ's Construction
"aperture"	"entire pathway of the [feeder cable or drop line] within the [undermold or primary mold], when viewed as if the [feeder cable or drop line] were removed" (Order No. 16 at 41)
"[second/third] aperture … extending partially through" and "first aperture … extending completely through"	All parties appear to agree that the first aperture follows the feeder cable. Upon consideration of the parties' arguments and the intrinsic evidence, and consistent with the construction of "aperture" above, the undersigned tentatively holds that the "second aperture" and "third aperture" terms

	correspond to the pathway in the undermold/primary mold of the claimed "first drop line" and "second drop line" respectively. The claim language ties the "second aperture" and the "third aperture" to these drop lines and, as discussed supra, the "aperture" terms are defined with reference to pathways for the claimed drop line(s) and/or feeder cable. (Order No. 16 at 48-49).
"primary mold"	"mold fully encasing the nexus and substantially sealing the nexus from external environmental conditions" To the extent there is more than one more with these characteristics, the "primary mold" is the innermost of such molds. (Order No. 16 at 37).

The *Markman* order directed that "[t]o the extent any party believes that any holdings in this Order warrant supplemental expert disclosures or procedures before the hearing that the parties could not reasonably have provided previously, the parties should meet and confer and jointly submit any proposal(s) therefor, together with justification therefor (and identifying any disputes) …". Order No. 16 at 49-50.

In response to Order No. 16, no party proposed any further supplemental expert disclosures or procedures. Accordingly, the parties' experts were limited at the evidentiary hearing to what they disclosed during expert discovery, as confirmed by the ALJ's ruling on related motions *in limine. See, e.g.,* Order No. 27 at 4, n. 3 ("Regarding Shoals' arguments concerning the *Markman* Order (*see* Compl. Opp. at 2-3), the undersigned notes that Shoals had an opportunity to argue that it should be permitted to supplement its expert's opinion in view of the *Markman* Order but did not seek to do so. *See* Order No. 16 (Feb. 20, 2024) at 49-50."); Order No. 28 at 4-5 ("Accordingly, while Mr. Brooks may testify regarding his analysis and conclusions regarding the domestic industry products and which samples he analyzed, such testimony shall be limited to testimony within the scope of his expert report and deposition, which Shoals has not shown to include a

representative product analysis for the '153 patent.").

B. "Aperture" Terms and Further Claim Construction

In Order No. 16, the ALJ found that "at least at this stage of the investigation, the evidence does not clearly and convincingly show that the "aperture" terms are indefinite." Order No. 16 at 41. The term "aperture" was construed as the "entire pathway of the [feeder cable or drop line] within the [undermold or primary mold] when viewed as if the [feeder cable or drop line] were removed." *Id.* The *Markman* Order noted that "Respondents raised various issues at the hearing relating, *e.g.,* the possibility of changes in the diameter of an aperture, two different drop lines usings a single cable, or pathways that bend". *Id.* at 41, n. 16. "Given the current state of the record, the undersigned does not find that the issues show clear and convincing evidence that the claim is indefinite." *Id.* The ALJ noted that "[t]his issue may be revisited after the evidentiary hearing." *Id.*

As of the *Markman* Order, the private parties had already submitted their pre-hearing briefs. On Shoals' part, for infringement and technical domestic industry where they bear the burden of proof, Shoals advanced arguments ***only*** under their proposed construction of "all **<u>or part</u>** of a pathway for the [drop line / feeder cable] within the [undermold / primary mold]". CPreHRB at 100-102 (emphasis added). Therein, Shoals argued that Respondents' and Staff's proposed construction "improperly adds the requirement that the "aperture" be "viewed as if the [feeder cable / drop line wire] were removed" or "when they underlying piece or part is removed." However, that is not required by the claims… Further, when viewed after the feeder cable, securing means, or drop lines are removed, the aperture would improperly include additional pathways." CPreHRB at 101. In other words, Shoals' rejected the concept of removing the underlying piece or part (cable or wire) from the mold structure to identify the claimed aperture. *Id.*

Notably, Shoals argued "Respondents' and Staff's constructions would also make every aperture "extend continuously or completely through the undermold, when the first and second drop lines are formed by one cable, rendering the "continuously" limitations (*see* Section e, *infra*), meaningless." *Id.* Neither of Shoals' technical experts offered this opinion, or provided any expert testimony in support of this argument, at the evidentiary hearing. On the other hand, both of Voltage's technical experts, Dr. Cameron and Dr. Kenny—the only experts who offered opinions on claim construction at the evidentiary hearing based on their analysis of the intrinsic record—explained how Shoals' interpretation of "aperture" rendered the "extends partially through" limitation meaningless if every "aperture" associated with an "input" necessarily only extended partially through the mold. Tr. (Cameron) 1070:4-24 (**Q.** now you said it would make limitations meaningless. What do we mean by that? **A.** I'm going to move forward on the slide, if you don't mind. I just want to kind of walk through what we already have in the claim. So we already know that we have the drop line and the feeder cable that are electrically coupled at the nexus and you go outside, that means you would necessarily have an aperture that's partially through, because you already know that the undermold fully encases the nexus and you already that the drop line is coupled to the feeder cable at the nexus. And so this just basically means you don't have to worry about whether there is an aperture extending completely through or partially through, rather. You already know it's there."); Tr. (Kenny) 1195:13-1196:2 (discussing "Start at the Nexus Test"); Tr. (Kenny) 1196:2-1197:10 (discussing "Effective Physical Path Test").

Below is a table showing the differences between Shoals' proposed claim construction and the *Markman* Order (differences annotated):

Shoals' Proposal for "aperture"	**Order No. 16**
"all or part of a pathway for the [drop line / feeder cable] within the [undermold / primary	**"entire pathway of the [**feeder cable or drop line] within the [undermold or primary mold],

mold]".	**when viewed as if the [feeder cable or drop line] is removed"**

At the evidentiary hearing, Shoals' technical expert, Mr. Brooks, testified on direct that the ALJ's *Markman* Order was consistent with his opinions under Shoals' proposal for "aperture". Tr. (Brooks) at 390:14-391:19. But when Shoals' counsel asked Mr. Brooks to explain why "the entire pathway construction" "doesn't affect [his] conclusions in this case", Mr. Brooks simply stated "[a]s it relates to the '153 patent, I believe it's consistent and it works." Tr. (Brooks) 391:20-23. Mr. Brooks provided no testimony as to the portion of the ALJ's construction (that was not part of Shoals' proposal that Mr. Brooks applied before the *Markman* order) identified above in **red ("when reviewed as if the [feeder cable or drop line] is removed")** in determining whether an aperture extends completely or partially through as required by the claims.

During Mr. Brooks' direct testimony, Staff and Respondents raised an objection that Mr. Brooks was offering new opinions based on the ALJ's construction of "aperture" that he had previously not disclosed, as well as whether Mr. Brooks' direct testimony was applying the ALJ's construction. The ALJ overruled the objection, noting for the parties that "it was a tentative ruling, so parties are able to present their arguments. And there seems to be a dispute about where the drop line begins and ends." Tr. (ALJ Bhattacharyya) 458:22-459:3. The ALJ further explained that "[t]o the extent he is arguing that the entire pathway is one drop line and not to drop lines connected, then I consider that still a live issue and okay to present" and that "it's completely an open issue where the drop line begins and ends, and whether the aperture corresponds to a single drop line or two drop lines, and my tentative construction was that it corresponds to a drop line." Tr. (ALJ Bhattacharyya) 459:23-460:1; 462:9-13.

a. Mr. Brooks' Inconsistent and Incorrect Application of the "Aperture" Construction

As Mr. Brooks continued his direct testimony, and after cross-examination, it became clear

that Mr. Brooks did not apply the "entire pathway construction" that he agreed to do in his direct. First, Mr. Brooks was asked about two of his own slides for the "second aperture" and "third aperture" limitations, reproduced below at RDX-0011.001:

Q. Mr. Brooks, on this slide, is it correct that you can see what you have identified in your – what you identified in your direct examination as the second and third – the second aperture on the left side and then the third aperture on the right side, right?

A. Yes.

Q. Okay. And is it right that you were attempting to trace, trace out the second and third apertures in each of those pictures?

A. A two-dimensional representation of a three-dimensional thing.

Q. Right. And is the green line supposed to represent the [axis] at which the second drop line on the right-hand side and the first drop line on the left-hand side, that they extend; is that right?

A. Yes.

Q. And so in your opinion the second and third apertures, they end as they're going in the direction towards the nexus. They end right at the nexus, right?

A. We're talking about the aperture through undermold, *so since there's no undermolding inside the nexus at this point*, other than anything would squeeze its way in, there's no intentional undermold there, then that would be in this case the end.

> Q. So I just want to make sure it's your opinion that the second and third aperture end at the nexus. The second [and third] apertures do not extend into the nexus, yes or no?
>
> A. That is my opinion.

Tr. (Brooks) 546:22-547:25 (among many errors in his analysis, Brooks excluding nexus region despite claims requiring that the nexus be fully encased by the undermold or primary mold).

But Mr. Brooks then confirmed that in his opinion, the "first drop line" associated with the "second aperture" ended somewhere ***inside*** the nexus (i.e., farther than beyond where in his opinion the "second aperture" ends). Tr. (Brooks) 548:6-11. Mr. Brooks did not have an opinion as to a specific point within the nexus where the first drop line ends. Tr. (Brooks) 550:3-5; 551:10-13 (Q. "Is there a specific point within the nexus that you identified as to where, in your opinion, the second drop line ends? Yes or no? A. No.).

As shown in the demonstrative below from Dr. Cameron's direct testimony (RDX-0002.0033; Tr. (Cameron) 1079:19-1080:8), Mr. Brooks annotated images of a Voltage LYNX cross section with where he believed the "first drop line" entering the nexus from the left ends (annotated in blue) and where he believed the "second drop line" entering the nexus from the right ends (annotated in red).

Voltage's rebuttal expert, Dr. Kim Cameron, explained using Mr. Brooks' demonstratives why his application of the ALJ's construction of "aperture" was problematic. Referring to RDX-0002C.0032 (shown below), Dr. Cameron explained how Mr. Brooks' second and third apertures end outside the nexus, but the drop lines extend into the nexus. *Id.* Logically, Mr. Brooks could not have applied the ALJ's tentative construction of "aperture" because the "**entire** pathway of the drop line within the [undermold or primary mold]" goes beyond where the point where Mr. Brooks opined that the aperture ends.

Dr. Cameron further explained that Mr. Brooks' opinion that the entire pathway is not within the mold (i.e., because the nexus is not within the mold despite the claims requiring that the nexus be fully encased by the undermold or primary mold) and the problem that interpretation creates with other claim limitations. Tr. (Cameron) 1079:19-1080:8. Using RDX-0002.0032, Dr. Cameron explained how under Mr. Brooks' theory, if the drop line or branch cable forming what Mr. Brooks contends are two different apertures that only extend partially through the mold

because there is no aperture, or portion of an aperture, within the nexus, the same would apply to the feeder cable. RDX-0002.0032, as shown below (annotated by Dr. Cameron with green arrows and yellow highlights for two apertures (instead of one) associated with feeder cable that would also only extend partially through (instead of completely through)):

Tr. (Cameron) 1074:20-1076:12. Dr. Cameron further explained: "I don't think [Mr. Brooks'] understanding of aperture is correct. And I do think there's an aperture that goes completely through the feeder cable. But, I mean, if you wanted to take his understanding, then I would say that the feeder cable doesn't – also goes through a partial aperture. So there's just a lot of ways that what he talks about is inconsistent." Tr. (Cameron) 1076:5-12.

Dr. Cameron provided an additional reason why Mr. Brooks' theory was flawed based on the claims' requirement that the nexus is fully encased by the undermold or primary mold. Tr. (Cameron)1076:13-1077:10. Mr. Brooks tried to rationalize that the "entire pathway of the drop

[redacted]

line extends only partially through the undermold" and "terminates at the nexus, because at the nexus there is no aperture where the undermold is surrounding the drop line." Tr. (Brooks) 478:16-22. But each claim requires that the undermold or primary mold (1) fully encase the nexus and (2) that it further comprises the claimed apertures, as shown in RDX-0002C.0039 below.

'153 Patent – Similar Words Limit Claimed Mold to Specific Structure

Claim 1

1. A lead assembly for use in a solar energy installation including:
a drop line terminating at a drop line connector, the drop line connector configured to connect with a central trunk of a wire harness, the central trunk of the wire harness having a plurality of branches that each are configured to electrically connect to a separate solar panel contained in an array of a plurality solar panels;
a feeder cable electrically coupled to the drop line at a *nexus;*
an undermold that fully encases the *nexus*, the undermold further comprising:
a first aperture extending completely through the undermold and having a first diameter, wherein the feeder cable extends through the first aperture along a first longitudinal axis; and
a second aperture extending partially through the undermold and having a second diameter different than the first diameter, wherein the drop line extends from the second aperture along a second longitudinal axis;
a third aperture extending partially through the undermold and having a third diameter different than the first diameter, wherein a second drop line extends from the third aperture along a third longitudinal axis; and
an overmold surrounding the undermold and forming an undermold-overmold interface at an outer surface of the undermold.

Claim 21

21. A solar power system comprising:
a plurality of solar panels each electrically coupled to one of a plurality of branches of a wire harness to form a first solar array;
a lead assembly comprising:
a drop line electrically connected to a central trunk of the wire harness and configured to receive power from the plurality of solar panels;
a second drop line electrically connected to a central trunk of a second wire harness and configured to receive power from a plurality of solar panels in a second solar array;
a feeder cable, the feeder cable electrically connected to the drop line and the second drop line at a *nexus*; and
a primary mold that fully encases the *nexus* so as to substantially seal the *nexus* from external environmental conditions, the primary mold further comprising:
a first aperture extending completely through the primary mold and having a first diameter, wherein the feeder cable extends through the first aperture;
a second aperture extending partially through the primary mold and having a second diameter smaller than the first diameter, wherein the drop line extends into the second aperture and
a third aperture extending partially through the primary mold and having a third diameter smaller than the first diameter, wherein the second drop line extends into the third aperture.

Claim 24

24. A solar power system comprising:
a plurality of solar panels electrically coupled by a wire harness to form a first solar array;
a lead assembly comprising:
a first drop line electrically connected to the wire harness and configured to receive power from the plurality of solar panels;
a feeder cable, the feeder cable electrically connected to the drop line at a *nexus;*
a primary mold that fully encases the *nexus* so as to substantially seal the *nexus* from external environmental conditions, the primary mold further comprising:
a first aperture extending completely through the primary mold and having a first diameter, wherein the feeder cable extends through the first aperture along a first longitudinal axis;
a second aperture extending partially through the primary mold and having a second diameter smaller than the first diameter, wherein the drop line extends into the second aperture along a second longitudinal axis; and
a second drop line electrically connected to a second wire harness that connects to a plurality of solar panels, the second drop line electrically connected to the feeder cable at the *nexus* fully encased by the primary mold, wherein the second drop line extends into a third aperture defined by the primary mold along a third axis.

JX-0089 ('153 patent), claims 1, 21, 24 RDX-0002C.0039

Under Mr. Brooks' theory, at least a portion of the drop line (*e.g.,* the exposed wire) is within the nexus, and thus must be fully encased by the undermold or primary mold per the claim. The same is true for the exposed wire of the feeder cable. In response to questions from Staff in regards to dependent claims 2 and 3, as well as Figure 7, Mr. Brooks confirmed that the exposed wire of the feeder cable and the exposed wire of the drop line are both within the compression lug and the nexus. Hr. Tr. at 638:8-640:3; 640:17-641:8 (Brooks). Yet at the same time, Mr. Brooks contends that there is no aperture within the undermold or primary mold, despite the aperture needing to be "the entire pathway of the [feeder cable / drop line] within the [undermold or primary mold], when viewed as if the [feeder cable / drop line] is removed" as required by ALJ's construction. As Dr.

Cameron explained, Mr. Brooks' theory creates additional inconsistencies with these other claim limitations, further evidencing that his interpretation of the claims (and failed attempt to apply the ALJ's claim construction) cannot be correct. Hr. Tr. 1076:24-1077:2 (Cameron) ("So you've got inconsistencies on the feeder cable. You have a situation where it's not within the inner mold, even though the inner mold is encasing the nexus. There are inconsistencies everywhere.").

These inconsistences and errors stem from Shoals' and Mr. Brooks' effort to reconcile its untenable claim construction position it took in expert reports and the pre-hearing brief—mainly that the "aperture" could be "**all or part**" of the "pathway of the [drop line / feeder cable] within the [undermold / primary mold]". Shoals never sought to supplement Mr. Brooks' expert opinions in view of the *Markman* Order, despite the significant differences between its proposed construction (and the only construction applied by Mr. Brooks in his expert report) and the *Markman* Order. Thus, while Mr. Brooks provided the conclusory statement that the *Markman* Order's construction of "aperture" is "consistent and it works", the evidence presented at the hearing showed that he did not apply the construction and never amended his opinions. The evolving positions with respect to "aperture" throughout this investigation are not surprising. None of Shoals' witnesses could say it was a term used in the solar industry; to the contrary, they consistently agreed it was not. JX-0209C (Gannon Dep. Tr. at 161:12-162:1, 163:18-22, 164:21-165:11, 168:20-169:4, 169:7-8, 280:08-09, 280:12, 282:09-18, 282:21-283:02); JX-0217C (Solon Dep. Tr. at 346:12-347:18); JX-0221C (Whitaker Dep. Tr. at 112:4-113:8, 120:11-17, 130:20-22, 131:1-2, 132:2-7, 133:9-19, 133:22-134:7).

b. Intrinsic Record Does Not Support Shoals' and Mr. Brooks' Interpretation

On cross-examination, Mr. Brooks confirmed that his application of the ALJ's construction amounted to an opinion that for "for each input there is necessarily one aperture associated with

it, and that aperture necessarily only extends partially through the mold. It does not go completely through the mold." Hr. Tr. 503:8-15 (Brooks). This opinion aligns with what Shoals presented in opening statements—that "the number of drop lines = number of apertures" as shown in an excerpt from their opening demonstrative (CDX-0001C.35) below:

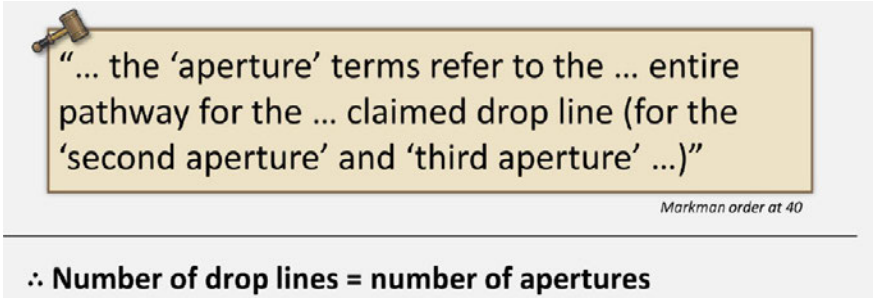

As illustrated *supra* in the Introduction, applying Shoals' theory renders the specific mold structure limitations of apertures that either extend completely or partially through the mold structure meaningless. [Mr. Brooks did not provide any expert testimony at the hearing regarding claim construction or whether the above theory—that the "number of drop lines = the number of apertures"—was supported by the intrinsic record.

On the other hand, both of Voltage's technical experts, Dr. Cameron and Dr. Kenny, discussed at length how Mr. Brooks' and Shoals' interpretation was not supported by the intrinsic record, including the detailed file history and evolution of the original claims of the '254 Patent through the issuance of the '153 Patent claims. Dr. Cameron first explained that the provisional application for the '254 and '153 Patents included product photos, including the only cross-section where you can see what is happening inside the mold, which is similar to the patent specification's Figures 5-7 (shown below at RDX-0002C.009). Tr. (Cameron) at 1053:17-1054:7; RX-0096 (Provisional Application) at 023; JX-0087 (254 Patent), Figs. 5, 6, 7.

[redacted]

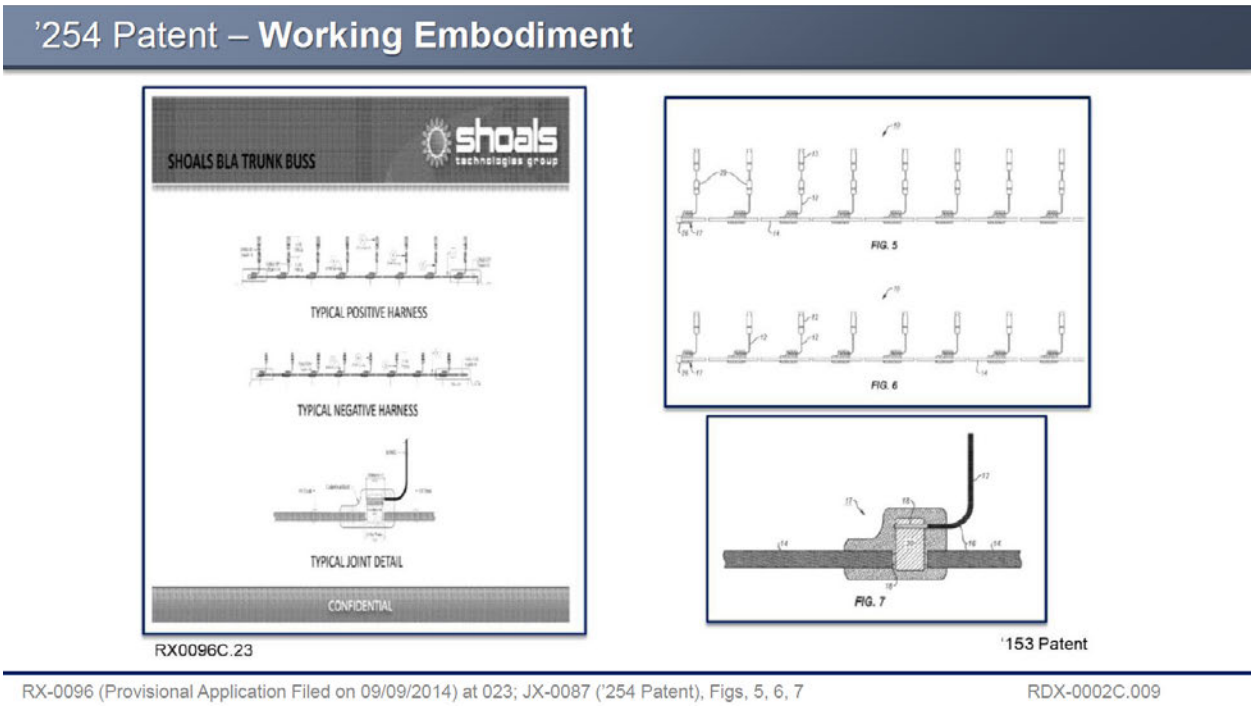

To clarify some ambiguity that she noted from reviewing the *Markman* transcript, Dr. Cameron explained that the Figure 7 embodiment could be an actual product and that it "pretty normal" to have a lug that is electrically connecting the feeder cable and the drop line even though there is not direct contact between the exposed wires of each. Tr. (Cameron) at 1054:8-21. RDX-0002C.0010 from Dr. Cameron's direct testimony further illustrated the consistency between the provisional application's product disclosures and Figure 7 of the patent.

[redacted]

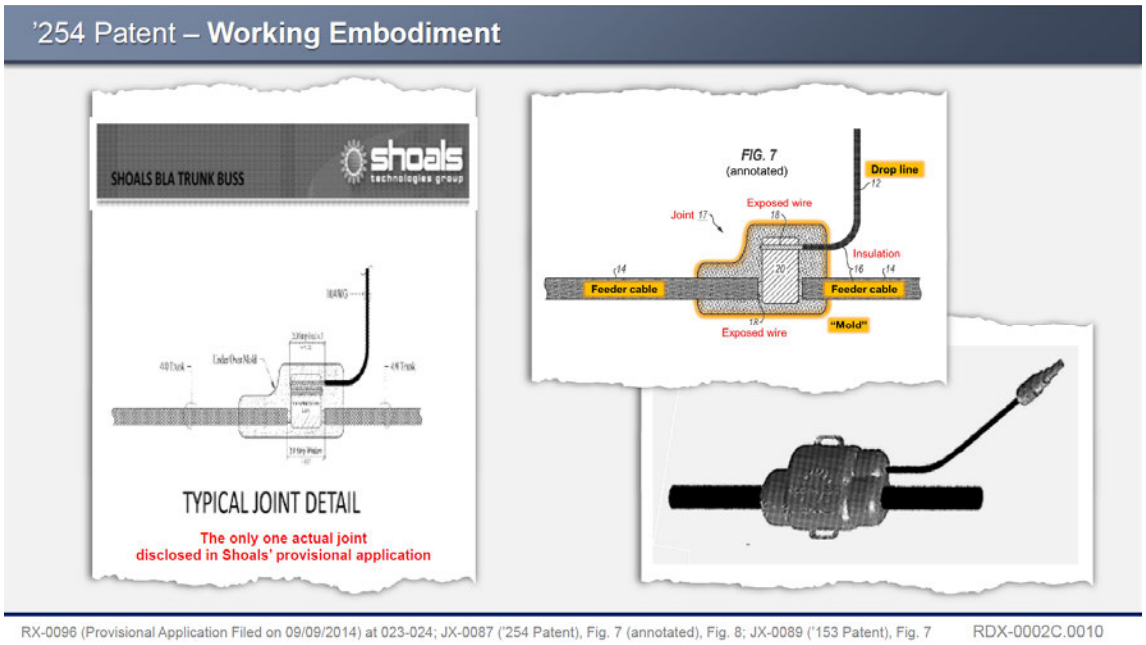

Dr. Cameron then explained the evolution of the claims, starting with the originally filed claim proposed for the '254 Patent, which includes at least one drop line and at least one feeder cable electrically coupled at a nexus secured by a compression lug, and an overmold surrounding the compression lug, and noting several examples of the prior art that formed the basis of multiple rejections during prosecution. Hr. Tr. 1054:24-1057:13 (Cameron). Dr. Cameron then explained how the Examiner proposed a detailed 113-word amendment that included the aperture limitations to overcome the prior art which limited the claimed undermold to a specific structure. Hr. Tr. 1057:20-1059:4 (Cameron). As shown in RDX-0002C.0015, the claim before the amendment already included a lead assembly, two drop lines, a feeder cable, nexus, undermold, overmold and combining power for a solar installation.

[redacted]

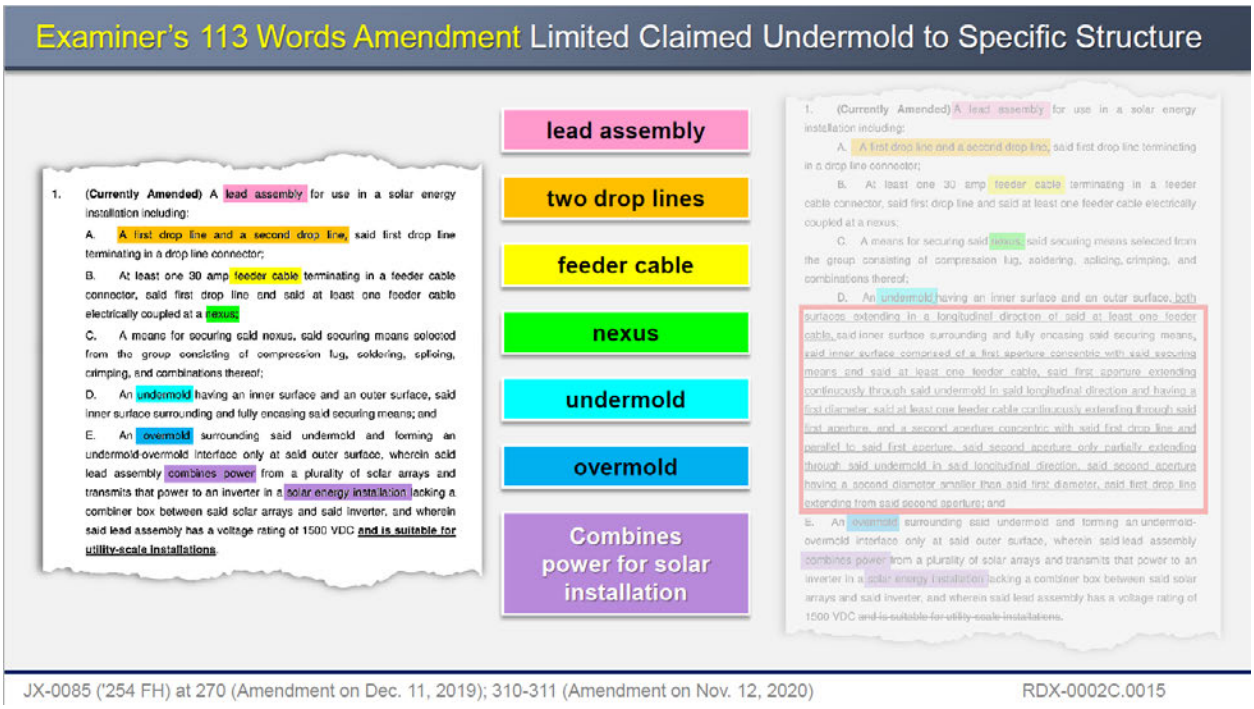

Dr. Cameron then explained how the applicant carried forward the allowed claims of the '254 Patent, and attempted to obtain broader claims in the original filed claim 1 of the application leading to the 153 Patent (filed on April 8, 2021), as shown below in RDX-0002C.0016. The requirement that apertures need to be parallel was removed, but the first and second aperture limitations carried forward, including the requirement that the first aperture extend completely through and the second aperture extend partially through. Hr. Tr. 1059:11-1060:4 (Cameron). RDX-0002C.0017 illustrated the alignment between the original filed claim 1 for the 153 Patent, Figure 7 from the specification, and the "Typical Joint Detail" figure from the provisional.

[redacted]

'153 Patent – **Similar Words Limit Claimed Mold to Specific Structure**

'254 patent, Claim 1

1. A lead assembly for use in a solar energy installation including:
A. A first drop line and a second drop line, said first drop line terminating in a drop line connector;
B. At least one 30 amp feeder cable terminating in a feeder cable connector, said first drop line and said at least one feeder cable electrically coupled at a nexus;
C. A means for securing said nexus, said securing means selected from the group consisting of compression lug, soldering, splicing, crimping, and combinations thereof;
D. An undermold having an inner surface and an outer surface, both surfaces extending in a longitudinal direction of said at least one feeder cable, said inner surface surrounding and fully encasing said securing means, said inner surface comprised of a first aperture concentric with said securing means and said at least one feeder cable, said first aperture extending continuously through said undermold in said longitudinal direction and having a first diameter, said at least one feeder cable continuously extending through said first aperture, and a second aperture concentric with said first drop line and parallel to said first aperture, said second aperture only partially extending through said undermold in said longitudinal direction, said second aperture having a second diameter smaller than said first diameter, said first drop line extending from said second aperture; and
E. An overmold surrounding said undermold and forming an undermold-overmold interface only at said outer surface, wherein said lead assembly combines power from a plurality of solar arrays and transmits that power to an inverter in a solar energy installation lacking a combiner box between said solar arrays and said inverter, and wherein said lead assembly has a voltage rating of 1500 VDC.

Original filed claim 1 of the application leading to the '153 Patent (Apr. 8, 2021)

1. A lead assembly for use in a solar energy installation including:
a drop line;
a feeder cable electrically coupled to the drop line at a nexus;
an undermold that fully encases the nexus, the undermold further comprising:
-!- a first aperture extending completely through the undermold and having a first diameter, wherein the feeder cable extends through the first aperture along a first longitudinal axis; and
a second aperture extending partially through the undermold and having a second diameter different than the first diameter, wherein the drop line extends from the second aperture along a second longitudinal axis; and
an overmold surrounding the undermold and forming an undermold-overmold interface at an outer surface of the undermold.

JX-0087 ('254 Patent), claim 1; JX-0088 ('153 FH) at 041 RDX-0002C.0016

Dr. Cameron then explained that the originally filed claim 1 for the 153 Patent was rejected over two references, Yamawaki and Vander Ploog, but noted that Vander Ploog, which was relied on by the Examiner for the "aperture" limitations, did not disclose a "third aperture" extending partially through as recited in dependent claim 10, which the Examiner said would be allowed. Dr. Cameron then showed an example of what adding a second drop line and third aperture extending partially through the mold would like—Figure 7 applied to three apertures where the first aperture extends completely through, but the second and third apertures only extend partially through the mold. Hr. Tr. 1060:5-1063:10; RDX-0002C.0018.

[redacted]

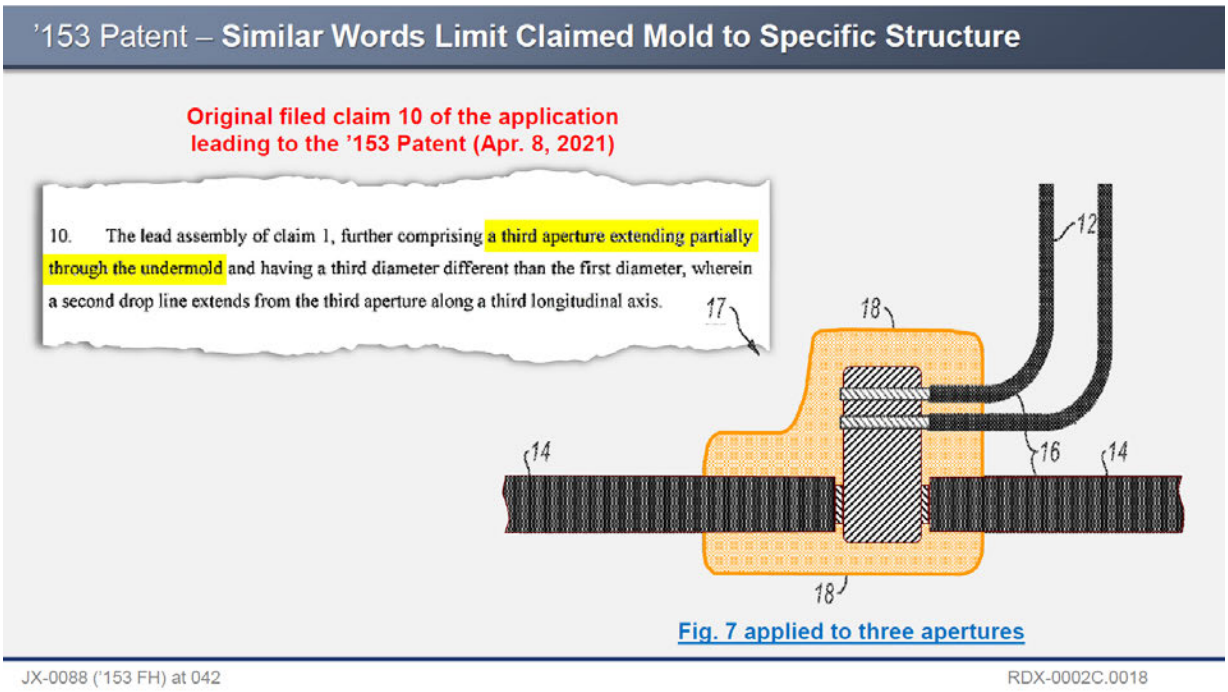

Dr. Cameron next explained how other Figures in the patent, such as Figures 29, 33, 35 and 37, did not depicture three apertures, where two apertures only extend partially through. Dr. Cameron "pointed out that there is no disclosure in the patent that any of these [Figures] have two apertures that are only partially through." Hr. Tr. 1063:17-1065:7; RDX-0002C.0018; RDX-0002C.0019.

c. Dr. Cameron's Explanation of the Confusion From *Markman* Hearing Based on "Drop Line"

To address the open issues identified by the ALJ in the *Markman* Order as it relates to "aperture" and how to determine whether an "aperture" extends completely or partially through, Dr. Cameron explained during her direct testimony the confusion that had been caused based on Shoals' evolving claim construction positions and arguments at the *Markman* hearing as it relates to the term "drop line". Hr. Tr. 1080:14-1081:6; 1085:3-1087:16 (Cameron).

At the *Markman* hearing, Staff originally proposed what was referred to as the "cable-test" to determine whether an aperture extended completely through or only partially through the undermold or primary mold. In that test, one looks to the entire pathway of the physical cable,

including the portion where the insulation is stripped (*i.e.,* the exposed wire), when viewed as if the cable is removed. Staff emphasized that the "piece or part" needed to be removed because the claim limitations were directed to a mold structure with specific aperture limitations, based on the Examiner's proposed 113-word amendment in the prosecution history. *See* JX-0298 (*Markman* Tr.) at What resulted from prosecution of the '254 Patent was a mold structure having two apertures, a first aperture that extends completely through the mold structure associated with the claimed feeder cable and a second aperture that extends only partially through the mold structure associated with the claimed drop line, as shown in Figure 7 and the commercial embodiments disclosed in the provisional application. Tr. (Cameron) at 1054:2-1059:7. As Dr. Cameron explained, the same limitations carried forward into the originally filed claims of the 153 Patent, but a third aperture associated with a claimed second drop online that only extends partially through was added to the mold structure to overcome the prior art of record. Tr. (Cameron) at 1059:11-1063:16.

Shoals, however, introduced confusion into the record by arguing at the *Markman* that the exposed wire of a drop line or drop line cable is compressed into the feeder cable such that the pathway effectively disappears. Shoals then equated "drop line" in Respondents' and Staff's proposed claim construction (and later the ALJ's construction) to what different witnesses throughout the hearing referred to as either "inputs", "input leads", "strings", "branches" or "drops". But Mr. Brooks admitted on cross-examination that "drop line" was not an industry term or term of art and that he could not recall seeing any documentation, whether from Shoals or Voltage, in this Investigation outside of the patent's disclosures, that referred to "branches" or "drops" as "drop lines". Hr. Tr. 492:5-495:17 (Brooks). But "drop line" was only a term used in the patent, which further distinguished from "drop" as also used in the patent and Shoals' own

[redacted]

documentation. ’153 Patent, 2:34-46 (describing Figures 5, 6, 9 and 10 all as “lead assembly” having a “single drop line”); 2:47-3:67 (describing various Figures as either “single drop” or “dual drop” lead assembly). Neither Mr. Brooks or Shoals’ validity expert, Mr. Weiner, discussed any of these Figures during their hearing testimony, and specifically whether any of Figures 29, 33, 35 or 37 were unclaimed embodiments. Dr. Cameron’s opinions on this point, thus, were unrebutted at the hearing.

d. Dr. Cameron’s Interpretation of the “Aperture” Construction

Dr. Cameron explained how she analyzed the intrinsic record, the arguments made at the *Markman* hearing and the *Markman* order and interpreted the ALJ’s construction of “aperture” as referring to the entire pathway of the cables within the mold when viewed as if they were removed. RDX-0002C.0036-0038.

> **Q.** Okay. And Dr. Cameron, what is your opinion regarding the term aperture in both the ’254 and ’153 patents?
>
> **A.** So, I guess, from my view I guess there’s – it’s a little – I think some of the confusion comes from tying aperture to drop line, and that’s why there’s still some different interpretations of what’s been said in the *Markman* Order. For me, you know, an aperture is really – it’s just a 3D hole. So as in the entire pathway for a cable in the undermold or the overmold – sorry –undermold or primary mold – that exists when it’s viewed when the entire cable has been removed.
>
> Tr. (Cameron) 1089:6-18.

The table below compares Order No. 16 with Dr. Cameron’s clarification for “aperture” with the differences bolded in color.

Order No. 16	Dr. Cameron’s Clarification for “aperture”
“entire pathway **of the [feeder cable or drop line]** within the [undermold or primary mold], when viewed as if the **[feeder cable or drop line]** is removed”	“**3-D hole (i.e.,** the entire pathway **for a cable** within the [undermold or primary mold]**)** when viewed as if the **entire cable** has been removed”

On examination by Staff, Dr. Cameron further clarified that “drop line 12” as used in the specification and Figures would be viewed by a POSITA as the same as “wire 12” or “drop wire

[redacted]

12" or "drop cable 12" 1147:3-1150:22. Both "feeder cable" and "drop line" are cables with exposed wire in the nexus, but Shoals sought to equate "drop line" with "drop" or "branch" creating confusion, in particular when applied to ALJ's construction of "aperture" which is the "**"entire pathway of the [**feeder cable or drop line] within the [undermold or primary mold], **when viewed as if the [feeder cable or drop line] is removed".** Rather than look at the cables that form the apertures in the mold structure when each is removed, Shoals' interpretation looks to either only remove a portion of the drop line or branch cable (consistent with its prior construction that allowed Shoals to only use "part of the pathway") or only rely on part of the pathway (not the entire pathway) to determine if the aperture extends partially or completely through. Either Shoals is not applying the ALJ's construction or Shoals is misinterpreting the ALJ's construction to create an infringement argument that is inconstant with the intrinsic record. Neither is correct.

Voltage respectfully submits that the ALJ should adopt Dr. Cameron's interpretation of "aperture" as "**3-D hole (i.e.,** the entire pathway **for a cable** within the [undermold or primary mold]**)** when viewed as if the **entire cable** has been removed". This construction is consistent with Order No. 16, but eliminates the confusion caused by the different interpretations and applications of "drop line." As the *Markman* Order previously reasoned "[g]iven Complainant's agreement that the "aperture" terms should be construed as pathways for certain structures (*see* CRB at 17), there is no persuasive basis for construing "aperture" to only correspond to any part of such pathway." Order No. 16 at 40. As Dr. Cameron explained, each claim required a specific mold with apertures through the mold structure. Tr. (Cameron) 1088:4-21 (describing RDX-0002C.036 (shown below)):

[redacted]

"aperture" terms: **Entire Pathway of the Cables Within the Mold**

With respect to the issue of whether the "aperture" corresponds to the "entire" pathway for the feeder cable and/or drop line (as indicated in Respondents' and Staff's proposed constructions), or to any part thereof (as suggested by Complainant's proposed construction), the undersigned finds that the "aperture" terms refer to the entire pathway for the claimed feeder cable (for the "first aperture") or claimed drop line (for the "second aperture" and "third aperture"). Given Complainant's agreement that the "aperture" terms should be construed as pathways for certain structures (*see* CRB at 17), there is no persuasive basis for construing "aperture" to only correspond to any part of such a pathway. Moreover, the fact that the claims differentiate between apertures that extend "continuously through said undermold" (*see, e.g.*, '254 patent, cls. 1, 7) and apertures "only partially extending through said undermold" (*see id.*) indicates that the apertures should be considered as an entire pathway. If taken to be any subset of that pathway, any aperture could be found to "only partially extend[]" through an undermold.

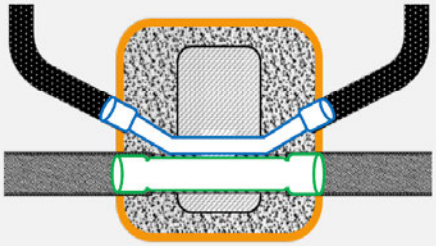

Order No. 16 (*Markman* Order) at 40 RDX-0002C.0036

At a minimum, Voltage respectfully submits that the ALJ's tentative construction should be clarified to make clear that "drop line", like the "feeder cable" refers to the physical structure forming the aperture within the mold. This clarification would remove the ambiguity and confusion caused by the inconsistent use of the term "drop line" which Shoals' own expert, Mr. Brooks, admitted is not a term of art in the solar industry.

e. The Testimony of the Other Technical Experts Support Dr. Cameron's Interpretation of "Aperture"

After Dr. Cameron provided her interpretation of "aperture", Shoals' validity expert, Joshua Weiner, was asked whether he believed Dr. Cameron's interpretation was consistent with the ALJ's construction. Specifically, he was presented with RDX-0017, an image of the LiveNote testimony from Dr. Cameron that morning.

[redacted]

LiveLitigation

Attend Your Next Legal Event Remotely
Ask Your Court Reporter How!

10:36:40 Q. Okay. And Dr. Cameron, what is your opinion
10:36:42 regarding the term aperture in both the '254 and '153
10:36:48 patents?
10:36:48 A. So, I guess, from my view I guess there's -- it
10:36:54 a little -- I think some of the confusion comes from tying
10:36:56 aperture to drop line, and that's why there's still some
10:37:00 different interpretations of what's been said in the Markma
10:37:04 Order.
10:37:04 For me, you know, an aperture is really -- it's
10:37:08 just a 3D hole. So as in the entire pathway for a cable ir
10:37:14 the undermold or the overmold -- sorry in the undermold or
10:37:18 primary mold -- that exists when it's viewed when the entir
10:37:24 cable has been removed.
10:37:26 Q. And if we turn to RDX-37, how does that work or

RDX-0017

At first, Mr. Weiner testified that it "looks kind of consistent to the Markman order", but then disagreed with her use of "cable" when "she should be using "feeder cable or drop line."" Tr. (Weiner) at 1303:20-1304:11. After reviewing RDX-0017 further, Mr. Weiner agreed that it was consistent with the *Markman* order, other than that he would use "feeder cable or drop line" instead of "cable." Tr. (Weiner) 1304:22-1305:1.

Mr. Weiner agreed that the claimed apertures are pathways through a mold and they need to be entire pathways per the ALJ's construction of "aperture." Tr. (Weiner) 1305:18-21. Mr. Weiner then agreed that "apertures are formed when you have, for example, a cable, you form a mold over it, and then when you remove the cable, that's where you have your 3D hole or entire pathway", but preferred to "stick to the *Markman* order." Tr. 1305:22-1306:7. Mr. Weiner agreed that the "feeder cable" is the "larger able that goes through the mold" but when asked if "the drop line is another cable going through the mold", he agreed: "Again, sure." Tr. 1306:8-1306:17. But Mr. Weiner continued to protest the use of the cable "because I'd like to stick to the terms in the patent and the claims." Tr. 1306:17-19.

To accommodate Mr. Weiner's hesitation to refer to a "drop line" as a "cable", Voltage tried to use a different term:

> **Q.** Both the feeder cable and the drop line, those are physical structures, right?"
>
> **A.** What do you mean by "physical structures"?
>
> **Q.** I would call them cables, but you don't want to call drop lines cables. I'm trying to find a term that we can agree on, which is something that a mold forms over and then pull it out and there's a hole, okay?
>
> **A**. An aperture, yes.
>
> **Q**. So what can we call the physical structure that is, when you pull it out, it forms a 3D hole going through the mold? Pick a term.
>
> **A**. That's fine. Now I understand how you mean it, I understand what you mean, let's keep going.

Tr. (Weiner) 1307:18-1308:5.

Mr. Weiner then agree that when you remove the feeder cable from the mold for the first aperture and the drop line from the mold for the second aperture, a POSA would view the apertures in the same way. Tr. (Weiner) 1308:4-14.

When Voltage then sought to ask Mr. Weiner to apply this agreement to the '153 Patent's Figure 7 to see if Mr. Weiner agreed with Dr. Cameron's interpretation of "aperture" (and if not, where there was still any disagreement), counsel for Shoals tried to shut down the line of questioning by saying "we're out of time" (which was quickly withdrawn), and then by objecting as outside the scope:

> **Q.** So now let's look at the Court's test for aperture, right, and also Dr. Cameron's test. I really want to understand where you see that there's a difference, if there is one.
>
> **Counsel for Shoals:** Your Honor, I think we're out of time.
>
> **Judge Bhattacharyya:** who is out of time?

Counsel for Shoals: Withdrawn. Sorry.

Judge Bhattacharyya: Okay.

Q. Mr. Weiner, are you with me?

A. (nodding head up and down).

Q. We've got a first aperture, a second –

Counsel for Shoals: I object. It's going way beyond the scope of the testimony he has already provided. He didn't even look at this figure.

Tr. (Weiner) at 1310:5-19.

The Court overruled the objection, recognizing that "we're going through the terms that he applied in doing his analysis." Tr. (ALJ Bhattacharyya) 1310:20-22.

Mr. Weiner then agreed that in Figure 7, there is a feeder cable associated with a first aperture and a drop line associated with a second aperture. Tr. (Weiner) 1310:24-1311:5. Mr. Weiner was then asked when he looks "at the apertures to determine whether or not the extend partially through or completely through, do you do that differently depending on if you're look at the feeder cable or the drop line or its associated apertures?" Tr. (Weiner) 1311:13-17. Mr. Weiner did not understand. Tr. (Weiner) 1311:18-22. Voltage reminded Mr. Weiner that it wanted to understand whether or not Mr. Weiner agreed or disagreed with Dr. Cameron's interpretation of "aperture." Tr. (Weiner) 1311:9-19. Shoals, for the third time, tried to shut down the line of questioning. Tr. (Shoals' Counsel) 1312:22 (**Shoals Counsel:** Your Honor, again, I object. We have gone over this. The question has been asked. The witness has answered it. Now we're badgering him to ger the answer that he wants."). ALJ Bhattacharyya again overruled the objection: "I understand your concern. I'm going to let Mr. Ou proceed, if he wishes." Tr. (ALJ Bhattacharyya): 1313:1-2.

Voltage proceeded to ask:

Q. Let me try one more time, okay? So you have Dr. Cameron's explanation that she gave on direct this morning, okay, up on the screen, right? And I want to make sure, maybe – I want to make sure that we're on the same page in terms of how we understand what she said. She says, a 3F hole – you understand what a 3D hole is, right?

A. I don't know what she means by a 3D hole. I know aperture means.

Q. Okay. How about a 3D hole as in the entire pathway for a cable in the mold that exists when it's viewed when the entire cable has been removed, can you have in mind what that is?

A. Yeah. We did that.

Q. Okay. Great. So if we put up Fig. 7, if you were to apply Dr. Cameron's view of the Court's construction and you were to look at the aperture associated with the feeder cable, right, we're going to take the feeder cable and we're going to remove it, right. Do you agree?

A. I follow you.

Q. Right? We're going to remove it from the mold. We're going to take it out, and then we're going to look at the 3D hole, which is the entire pathway when the feeder cable is removed. Do you follow me?

A. Okay.

Q. And so just looking at Fig. 7, you would agree that that aperture goes all the way through, right?

A. Yes.

Tr. (Weiner) 1313:3-1314:6.

Voltage then asked Mr. Weiner to do the same thing for the drop line in Figure 7, but before Voltage could finish the question, Shoals' counsel interjected again – claiming that Voltage was out of time. Tr. (Weiner) 1314:7-19.[2]

[2] It remains unclear whether Voltage was actually out of time, considering the repeated attempts by Shoals to shut down examination of Mr. Weiner on this important topic. Shoals' counsel acknowledged the parties had not met and conferred on time for the day, including how time for objections made throughout the day would be assessed. The time taken to address Shoals' multiple interruptions and overruled or withdrawn objections certainly should not have counted against Voltage. Regardless, Mr. Weiner's evasive responses and Shoals' demonstrative concerns over cross-examination about how Mr. Weiner understood the claim terms he purportedly understood

Though Shoals shut down Voltage's examination, Staff also sought to understand which test Mr. Weiner applied to determine whether an aperture extends completely or partially through the mold. But when Staff tried to ask Mr. Weiner about SDX-0003, the annotated Figure 35 from Staff's examination of Dr. Kenny, Mr. Weiner again deflected: "Well, I struggled with this, because there's no mold, so I can't see apertures, and so it's hard for me – it was hard for me to follow this, to be honest." Tr. (Weiner) 1316:22-24.

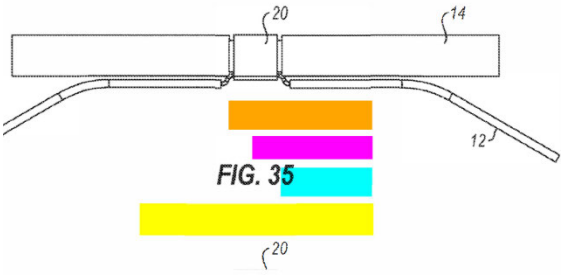

SDX-0003

When Staff asked Mr. Weiner to describe where the second aperture corresponding to the drop line begins and ends, Mr. Weiner again dodged the question: "I can't describe it at all. There's no mold Apertures are pathways in a mold." Tr. (Weiner) 1317:14-20.

Staff asked Mr. Weiner to "imagine an undermold" and to "describe the length of the wire corresponding to the length of the void in the undermold. Mr. Weiner responded: "So the drop line aperture, either the second or the third, depending on which one we're looking at, it would extend from the nexus to the edge of the undermold." Tr. (Weiner) 1317:21-1318:3. As applied to Figure 7, an annotated version below illustrates Mr. Weiner's opinion:

---

and applied to his opinions are reflective of the untenable positions Shoals is advancing with respect to "apertures." At a minimum, Mr. Weiner's testimony should be given little to no weight based on his inability to even articulate how he applied the ALJ's construction of "aperture" to his analysis.

[redacted]

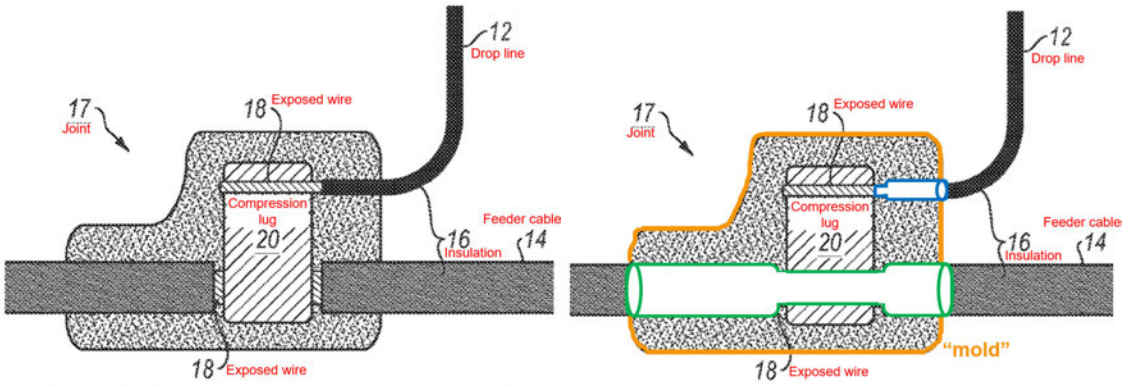

But Dr. Kenny explained, using Figure 35 and in response to Staff's questions in applying the different interpretations of where the "drop line" ends in the nexus to account for its "entire pathway" and define the associated aperture that the above illustration cannot be correct while properly applying the ALJ's claim construction. Exposed wire 18 is admittedly part of the drop line, but in Mr. Weiner's interpretation, none of the exposed wire 18 is removed as required by the ALJ's claim construction to determine the "entire pathway."

In the end, all Mr. Weiner could say was that he agreed with Mr. Brooks that "when the drop line meets the nexus, it has done its job." Hr. Tr. 1318:9-13 (Weiner). Shoals did not attempt to elicit testimony Mr. Weiner to support Mr. Brooks' interpretation of the ALJ's construction or explain how it was supported by anything in the intrinsic record. Rather, when Voltage tried to ask Mr. Weiner about his understanding of the term "aperture", Shoals repeatedly tried to shut down the line of questioning, to no avail. Tr. 1310:5-22. ("I object. It's going beyond the scope of the testimony [Weiner] has already provided. He didn't even look at this figure.") The ALJ overruled the objection, noting "[w]e're going through the terms that he applied in doing his analysis." *Id.* Minutes later Shoals objected again "Your Honor, again, I object. We have gone over this. The question has been asked." Hr. Tr. 1312:22-25 (Shoals' objection). Again, the objection was overruled. Hr. Tr. 1313:1-2 (ALJ Bhattacharyya).

Shoals' repeated attempts to stop Voltage from simply asking Mr. Weiner about how understood the ALJ's construction of "aperture" is telling, and not surprising. The only experts that discussed their analysis of the intrinsic record and how it informed their opinions were Dr. Cameron and Dr. Kenny. Dr. Cameron's opinions regarding the tentative constructions relating to "aperture" from the *Markman* Order were not challenged and stand unrebutted from the evidentiary hearing. Similarly, neither of Shoals' technical experts offered any rebuttal testimony to Dr. Kenny's opinions that the term is indefinite or lacks written description under 35 U.S.C. § 112. *See infra* Section V.C.3.

C. Other Disputed Claim Terms

Based on the evidence presented at the hearing, the meaning of "fully encased" appeared to potentially be in dispute, and was addressed by Dr. Cameron in her direct testimony. *See supra* Section IV.B.3.c.

IV. U.S. PATENT 11,689,153 - NON-INFRINGEMENT

A. Scope of Products at Issue

1. Representativeness of Voltage Accused Trunk Bus Products

Under the infringement theory presented by Shoals and its infringement expert, Mr. Brooks, any cable assembly with a mold structure having a trunk or feeder and two or more branches (regardless of the aperture structures formed in within the mold structure) infringe the '153 patent. As explained *supra*, Section III.A., Shoals' claim interpretation is not supported by the intrinsic record, and would render the mold structure limitations added by the Examiner during prosecution of the '254 Patent, which Shoals' litigation counsel carried forward into the original claims of the '153 Patent, meaningless.

During discovery, Voltage produced 15 different LYNX Trunk Bus configurations, including a mid-production sample (with no outer mold) and a completed product, and identified

the inner mold structure as representative of the dimensions of the mold structure for the undermold or innermold that would exist for the different LYNX Trunk Bus configurations made using the same mold die or mold tool. RX-0339C; CX-0738C.

Through these disclosures, Voltage provided product samples covering all of its Trunk Bus configurations' mold structures for the alleged undermold (i.e., which would, through a CT scan or other tear down analysis show the aperture structures within the mold structure, such as shown in RPX-0052(C)).

2. Adjudication of Voltage's AD Trunk Bus Products

a. Legal Standard

To determine "whether a respondent has met its burden for adjudication of a redesigned or alternative product," the Commission considers: "(1) whether the product is within the scope of the investigation; (2) whether it has been imported; (3) whether it is sufficiently fixed in design; and (4) whether it has been sufficiently disclosed by respondent during discovery." *Certain Human Milk Oligosaccharides*, Inv. No. 337-TA-1120, Comm'n Op. at 18, EDIS Doc. ID 712205 (June 8, 2020) (hereinafter, "*Milk Oligosaccharides*") (collectively, the "*Milk factors*"). Regarding Factor 2, importation may be relevant but "actual importation of the redesign is not a mandatory requirement." *Id.* at 18 n.21. Commission policy "favor[s] … adjudicating redesigns to prevent subsequent and potentially burdensome proceedings that could have been resolved in the first instance in the original Commission investigation." *Id.*

During the discovery phase of this Investigation, Voltage disclosed two modifications to its current LYNX Trunk Bus configurations ("AD Trunk Bus") by

Voltage disclosed the details of these modifications in its interrogatory responses, and also produced product and mold drawings, photographs, shipping labels, and physical samples starting in September 2023 and continuing through the end of the fact discovery period. *See e.g.* JX-0199C (Voltage's ROG Response) at 15-21, RX-0068C, RX-0069C, RX-0070C, RX-0071C, RX-0072C, RX-0073C, RX-0074C, RX-0075C, RX-0076C, RX-0077C, RX-0078C, RX-0079C, RX-0083C; RPX-0038C, RPX-0039C, RPX-0040C, RXP-0041C, RPX-0042C, RPX-0043C. Voltage's co-founder, Ms. Ruiyan Ge, was also a corporate designee on deposition topics relating to the AD Trunk Bus and was deposed on these topics in December 2023. At the evidentiary hearing, Ms. Ge provided further testimony regarding the AD Trunk Bus, and both Shoals' and Voltage's technical experts provided expert testimony regarding the AD Trunk Bus. *See e.g.* Tr. at 410:12-14, 451:22-452:7, 462:24-465:1, 569:12-21 (Brooks); 918:22-919:14, 920:10-19, 936:12-937:24, 970:9-14, 977:24-978:16 (Ge); 1091:6-10, 1100:12-1101:7, 1109:4-1115:9, 1153:16-19, 1155:4-14 (Cameron).

As described below, the AD Trunk Bus should be adjudicated in this investigation because Voltage has met its burden when considering each of the *Milk* factors.

b. Factor 1: the AD Trunk Bus is Within the Scope of the Investigation

The AD Trunk Bus falls within the scope of the investigation, which includes "assemblies for connecting solar panel arrays to an inverter, which assemblies are called lead assemblies or trunk buses." 88 Fed. Reg 37905 (June 9, 2023). The AD Trunk Bus products are trunk buses or cable assemblies, which are types of photovoltaic connectors. Shoals accused the AD Trunk Bus of infringement in its final infringement contentions, *see* JX-0314C (Shoals Final Infringement

Contentions – AD Trunk Bus), and Shoals' infringement expert, Mr. Brooks, identified the AD Trunk Bus as an accused product. *See e.g.* Tr. (Brooks) at 451:22-452:7; *see also* CDX-0005C.106-113.

c. Factor 2: the AD Trunk Bus has been imported

Even though "actual importation of the redesign is not a mandatory requirement," *Milk Oligosaccharides* at 18 n.21, Voltage imported physical samples of the AD Trunk Bus well before the close of fact discovery. *See* RX-0066C, RX-0067 (shipping label), RX-0084C (evidence of importation of 500 MCM product samples); RX-0337C (Oct. 2023), RX-0084C (Nov. 2023), RX-0339C (Nov. 2023); RDX-0008C.004; Tr. (Ge) at 936: 12-24; *see also Milk Oligosaccharides* at 20.

Shoals cannot dispute that Voltage imported physical samples of the AD Trunk Bus into the United States during the discovery period. Indeed, Mr. Brooks received those samples, cut them open, and testified about them during the evidentiary hearing. *See* Tr. (Brooks) at 453:21-454:11; 462:24-464:15. Likewise, Dr. Cameron received the same set of samples, took CT Scans of the physical samples, and analyzed them in forming her rebuttal opinions. *See* Tr. (Cameron) at 1100:12-1101:7, 1110:12-1112:7. She also presented evidence and testimony at the evidentiary hearing regarding the complete physical samples that were imported into the United States. *Id.*

Shoals' pre-hearing brief included unsupported attorney argument and conjecture that the mid-production samples that Voltage produced were imported into the United States CPre-HRB at 116. Shoals never asked Ms. Ge about this topic during her deposition and avoided asking her again about it at the evidentiary hearing. And although Mr. Brooks provided testimony on direct that

Tr. (Brooks) at 452:8-453:2. Thus, Shoals conjecture is nothing more than unsupported attorney arguments, which is not evidence. *See Icon Health and Fitness, Inc. v. Strava, Inc.*, 849 F.3d 1034, 1043 (Fed. Cir. 2017) (holding that the PTAB's decision affirming obviousness rejection of claims was unsupported by substantial evidence because the PTAB merely relied on arguments drafted by attorneys); *Certain Filament Light-Emitting Diodes and Products Containing Same (II)*, Inv. No. 337-TA-1220, Comm'n Op., at 56-57, EDIS Doc. ID 764894 (Mar. 8, 2022) (affirming invalidity for a claim limitation given combination of two prior art references and disregarding the complainant's technical argument for why a POSITA would not combine those references because "conclusory attorney arguments" were insufficient to "counter the substantial evidence and expert testimony" that supported the obviousness finding).

More concerning though was Shoals' misrepresentation of the evidence during opening statements. As shown in RDX-0011C.008, Shoals selectively quoted from Voltage's interrogatory response and

[redacted]

But when Mr. Brooks was asked about Shoals arguments during opening and shown the entire interrogatory response, Mr. Brooks refused to answer the question. Tr. (Brooks) 567:12-14 ("This – this discussion and interrogatory was way back on November 20th before many other discussions happened and is absolutely in conflict with the Markman order); Tr. (Brooks) 569:10-11 ("I think we're talking about apples and pomegranates here. These are non sequitur."). RDX-0011C.009, citing JX-0199C.0037, shown below:

When pressed as to whether he agreed with the argument presented in opening statements that , Mr. Brooks' disclaimed it *See* Tr. (Brooks) at 569:12-21 ( ).

Shoals' entire argument that Voltage has not imported its AD Trunk Bus, including its unfounded conjecture , was unsupported. It's misrepresentation of evidence to advocate for the ITC to not adjudicate Voltage's AD Trunk Bus is highly concerning. Commission Rule 210.4(c)-(d).

d. Factor 3: the AD Trunk Bus is sufficiently fixed in design

The AD Trunk Bus products are sufficiently fixed in design such that the ALJ should determine whether they infringe or not. Voltage disclosed the details of these modifications in its interrogatory responses, and also produced product and mold drawings, photographs, shipping

labels, and physical samples starting in September 2023 and continuing through the end of the fact discovery period. *See e.g.* JX-0199C (Voltage's ROG Response), JX-0156C; RX-0068C, RX-0069C, RX-0070C, RX-0071C, RX-0072C, RX-0073C, RX-0074C, RX-0075C, RX-0076C, RX-0077C, RX-0078C, RX-0079C; RX-0083C; RPX-0038C, RPX-0039C, RPX-0040C, RXP-0041C, RPX-0042C, RPX-0043C. The totality of evidence produced by Voltage, including the mid-production product samples, the complete product samples, the technical drawings and the CT scan from Dr. Cameron, in addition to analysis done by Shoals and Mr. Brooks, including Shoals' cross-section photos of the complete samples, clearly indicate that . These designs were sufficiently fixed such that Shoals could assert infringement contentions against them, and its infringement expert could opine on them, including at the evidentiary hearing. *See* JX-0314C (Shoals Final Infringement Contentions – AD Trunk Bus); *see also e.g.* Tr. (Brooks) at 451:22-452:7; CDX-0005C.106-113.

[redacted]

[redacted]

[redacted]

[redacted]

[redacted]

[redacted]

[redacted]

[redacted]

[redacted]

[redacted]

[redacted]

[redacted]

[redacted]

[redacted]

[redacted]

[redacted]

[redacted]

[redacted]

[redacted]

[3] RPX-0004C is a hard drive that has been produced before Dr. Cameron's deposition. It contains all CT Scan data and a software to view the data. RPX-0004.1C, RPX-0004.2C, RPX-0004.3C and RPX-0004.4C are videos created based on the CT Scan data and can be viewed by any media player.

[redacted]

[redacted]

[redacted]

[redacted]

[redacted]

[redacted]

[redacted]

[redacted]

[redacted]

Finally, even if Voltage decides to address any hypothetical manufacturing tolerance or variance issues in the mass production process, the Commission has rejected the same type of argument made by Shoals that the design is not fixed. *See Certain Flocked Swabs, Products Containing Flocked Swabs, and Methods of Using Same*, Inv. No. 337-TA-1279, Final I.D., at 36, EDIS Doc. ID 787166 (October 28, 2022) (finding the fact that BioTeke may ultimately use a different redesign product does not mean that the particular redesigns already manufactured and provided in litigation were not sufficiently fixed); *see also Certain Electrical Connectors And Cages, Components Thereof, And Products Containing the Same*, Inv. No. 337-TA-1241, Final I.D., 2022 WL 1124999, at *26 (March 11, 2022) (finding the redesign products sufficiently fixed in design under *Oligosaccharides*, when the redesign products were described in various documents and samples were produced in

[redacted]

discovery, despite evidence that a design change may occur later in the product development cycle.); *see also Certain Mobile Devices with Multifunction Emulators*, Inv. No. 337-TA-1170, I.D., EDIS Doc. ID 738549, at 10-16 (Mar. 16, 2021) (finding the redesigns to be sufficiently fixed in design although it did "not seem to be commercially feasible" and "testing necessary to be released to the market" had not been completed.); *see also Certain Electronic Devices, Including Streaming Players, Televisions, Set Top Boxes, Remote Controllers, and Components Thereof*, Inv. 337-TA-1200, Final Initial Determination at 90-91, EDIS Doc. ID 747669 (July 9, 2021) (finding the redesign products to be "to be sufficiently fixed in design where respondents produced physical samples in discovery, although the documentation for the redesign products had not been updated and the products were not ready for mass production.").

e. Factor 4: The Fixed Design of the AD Trunk Bus has Been Sufficiently Disclosed by Voltage During Discovery

There can be no reasonable dispute that Voltage sufficiently disclosed the technical features and functionality of the fixed design of the AD Trunk Bus during discovery. Voltage produced technical documentation, contentions, and physical samples relating to the alternative designs, as summarized in RDX-0005C.004 and explained during the hearing by Voltage's co-founder, Ms. Ge. *See* Tr. (Ge) at

In September 2023, Voltage produced design documents and disclosed its alternative design in its first supplemental response[4] to Shoals' Interrogatory No. 86.

See JX-0156C (VOLTAGE_00004924C,); JX-0199C (Voltage's ROG Response) at 16-18.

[4] Served on September 27, 2023.

.

On October 12, 2023, Voltage produced two product samples[5] *See* RPX-0038C, RPX-0039C and RX-0337C (Production Letter).

On October 23, 2023, Voltage produced more drawings *See* RX-0068C, RX-0069C, RX-0070C, RX-0071C, RX-0072C, RX-0073C, RX-0074C, RX-0075C, RX-0076C, RX-0077C, RX-0078C, RX-0079C

On November 20, 2023, Voltage produced dozens more samples *See* RX-0339C (Production Letter).*See also* RX-0083C (photos).

On January 11, 2024, Voltage's non-infringement expert Dr. C deposition that her CT scans— *See* RPX-0004C; RPX-0004.3C; RDX-0002C.0066

According to the Commission, "extensive discovery" is not required, but rather, "discovery that is sufficient for the complainant to assess the features relevant to the asserted patent claims." *See Milk Oligosaccharides* at 20 n.22. The technical documentation cited above is sufficient for Shoals and the Administrative Law Judge to assess the features relevant to the asserted patent

[redacted]

claims, [redacted].[7] *See* JX-0314C (Shoals Final Infringement Contentions – AD Trunk Bus); *see also e.g.* Tr. (Brooks) at 451:22-452:7; CDX-0005C.106-113. Voltage produced this evidence well in advance of the close of fact discovery and Shoals questioned Voltage's corporate designee on the AD Trunk Bus, Ms. Ruiyan Ge, on the *Milk* factors and technical details of the AD Trunk Bus during her deposition and at the hearing. *See* JX-0210C (Ge Depo Tr.) at 156:19-172:19; Tr. (Ge) at 966:8- 967:1.

B. Voltage's Accused LYNX and AD Trunk Bus Products Do Not Infringe

At the evidentiary hearing, the remaining claims of the '153 Patent that Shoals asserted that Voltage infringed were claims 1, 11, 12, 13, 14, 18, 21, 23 and 24 of the '153 Patent. The evidence showed that under the proper interpretation of the *Markman* Order, none of the LYNX Trunk Bus products or AD Trunk Bus products infringe any of the asserted claims.

(1) Claim 1

a. [1.c.ii] [1.c.iii] No second / third aperture that extends only partially through the undermold

i. Dr. Cameron's claim construction

As discussed *supra* Section III.A. (Claim Construction), Dr. Cameron explained during the evidentiary hearing her understanding of the ALJ's claim construction of "entire pathway of the [feeder cable / drop line] within the [undermold / primary mold] when viewed as if the [feeder cable / drop line] were removed" in view of the *Markman* order and her own analysis as a POSA

[7] To the extent the tentative constructions relating to "aperture" are modified and the Court adopts the "see-through test" as the test for determining where an aperture extends partially or completely through the undermold or primary mold, Voltage submits that no violation of the current LYNX products or the AD Trunk Bus should be found because Shoals has not offered any opinions of infringement under such interpretation. Shoals' complaints regarding this design change during the evidentiary hearing was an unnecessary and irrelevant distraction considering Shoals has not made any alternative infringement theories in this Investigation. Tr. (Objection by Shoals' Counsel) at 919:18-936:10.

of the intrinsic record. Dr. Cameron explained "aperture" as a "3-D hole, so as the entire pathway for a cable in the [undermold / primary mold] that exists when it's viewed when the entire cable has been removed." *See* Tr. (Cameron) at 1089: 6-18.

Each asserted claim is directed to a specific mold structure, and as the file history shows, specific aperture structures were added to the claims to overcome prior art. Shoals' position that the number of apertures (that each necessarily extend partially through the mold) are simply equal to the number of drop lines is legally flawed and renders the aperture limitations meaningless. Dr. Cameron explained that what is claimed is the specific mold structure, further comprising of three apertures, with specific limitations regarding whether an aperture extends completely through or partially through the mold structure. *See* RDX-0002C.0021 (summarizing independent claims 1, 21,24 and their [undermold / primary mold] further comprising:" limitations). At the hearing, Dr. Cameron explained:

> Q. And the asserted claims relate to a mold – an undermold with certain features[?]
>
> A. Yes, again, the aperture -- I know there's been kind of a lot of discussion this week about drop lines, but I do think it's important to focus first on what's really being claimed here, because the drop line is claimed separately from the feeder cable, and the undermold. And the apertures are discussed with respect to the undermold.
>
> And so what's claimed is an undermold that fully encases the nexus, and the undermold needs to have three apertures with specific characteristics, including one of them being completely through, one being partially through, and the third being partially through.

Tr. (Cameron) at 1065:20-1066:7.

In forming her opinions on non-infringement, Dr. Cameron examined every Voltage Accused Trunk Bus sample and AD Trunk Bus sample produced in this Investigation, as summarized in the table below (RDX-0002C.0049), including the mold structures of the inner mold material using CT scans of the samples. Dr. Cameron concluded that none of the

configurations meet the limitations "second aperture that extends only partially through the undermold" or "third aperture that extends only partially through the undermold." *See* RPX-0008 - RPX0037; RPX-0038C-0043C; RDX-0002C.0049-0050; Tr. (Cameron) at 1100: 5-1101:7.

Samples of Accused Products

No.	Configurations of LYNX Trunk Bus	Complete Product	Mid-Production Sample
1.	2/0 with up to two branches	RPX-0008	RPX-0009
2.	3/0 with up to two branches	RPX-0010	RPX-0011
3.	3/0 with up to four branches	RPX-0012	RPX-0013
4.	4/0 with up to four branches	RPX-0014	RPX-0015
5.	250MCM with up to two branches	RPX-0016	RPX-0017
6.	250MCM with up to four branches	RPX-0018	RPX-0019
7.	300MCM with up to two branches	RPX-0020	RPX-0021
8.	400MCM with up to two branches	RPX-0022	RPX-0023
9.	400MCM with up to six branches	RPX-0024	RPX-0025
10.	500MCM with up to two branches	RPX-0026	RPX-0027
11.	500MCM with up to four branches	RPX-0028	RPX-0029
12.	500MCM with up to six branches	RPX-0030	RPX-0031
13.	600MCM with up to two branches	RPX-0032	RPX-0033
14.	600MCM with up to four branches	RPX-0034	RPX-0035
15.	750MCM with up to two branches	RPX-0036	RPX-0037

RPX RDX-0002C.0049

Samples of Alternative Design Products

No.		Complete Product	Mid-Production Sample
1.	[redacted]	RPX-0038C	RPX-0039C
2.		RPX-0040C	RPX-0041C
3.		RPX-0042C	RPX-0043C

RPX RDX-0002C.0050

As shown in Dr. Cameron's CT scans for the configurations with two branches, both the "3D hole" for the drop "line" or "drop line" cable and the "3D hole" for the feeder cable, extend completely through the undermold such that there is no third aperture in the mold structure. *See* RPX-0004C, RPX-0004.2C; Tr. (Cameron) at 1102:8-1104:21; *see also* RDX-0002C.0053, 0054, 0055.

'153 Patent vs. the Accused Products (including AD)

Claim 1

1. A lead assembly for use in a solar energy installation including:

a drop line terminating at a drop line connector, the drop line connector configured to connect with a central trunk of a wire harness, the central trunk of the wire harness having a plurality of branches that each are configured to electrically connect to a separate solar panel contained in an array of a plurality solar panels;

a feeder cable electrically coupled to the drop line at a *nexus;*

an undermold that fully encases the *nexus*, the undermold further comprising:

a first aperture extending completely through the undermold and having a first diameter, wherein the feeder cable extends through the first aperture along a first longitudinal axis; and

a second aperture extending partially through the undermold and having a second diameter different than the first diameter, wherein the drop line extends from the second aperture along a second longitudinal axis;

a third aperture extending partially through the undermold and having a third diameter different than the first diameter, wherein a second drop line extends from the third aperture along a third longitudinal axis; and

an overmold surrounding the undermold and forming an undermold-overmold interface at an outer surface of the undermold.

Accused Products

The structure of the MOLD when feeder cable are removed

[redacted]

JX-0089 ('153 patent), claim 1 RDX-0002C.0053

[redacted]

As shown in Dr. Cameron's CT Scans for the configurations with four or more branches, the "3D hole" for each drop "line" or "drop line" cable, as well as the "3D hole" for the feeder cable, each extend completely through the undermold. Thus, while there is a third aperture, each of the second and third apertures extend completely through the undermold, not partially through the undermold as Mr. Brooks and Shoals contend. *See* RDX-0002C.0056-0060 (exemplary configurations of Voltage's Trunk Bus samples).

[redacted]

See RDX-0002X.0059 as an example.

Shoals does not dispute [redacted] *See e.g.* Tr. at 27: 20-22 (Shoals Opening Statement); 619: 8-18 (Brooks); 561:22-562:17 (Brooks). During the *Markman* hearing, Shoals argued that the drop line cable "essentially ends because it's crimped against the feeder cable so there is no longer a pathway at that point." *See* JX-0298 (*Markman* Tr.) at 209:1- 210:3.

However, Dr. Cameron explained that the "pathway" for the drop line cable is very clearly still in physical existence for all samples that she has examined and "does not get broken" as shown in both her CT Scan videos, just as is the "pathway" of the feeder cable that Shoals argues extends completely through the undermold / primary mold. *See* Tr. (Cameron) at 1104:25-1107:2. Dr. Cameron's explanation is consistent with the testimony of Voltage's co-founder, Ms. Ge, who explained [redacted] Tr. (Ge) at 911:20-912:17; RDX-0008.002 (showing RPX-0053C; JX-0151C and [redacted]):

Thus, while Shoals' counsel at the *Markman* hearing theorized that the smaller apertures end at the nexus because there is no longer a physical pathway is directly contradicted by the evidence presented at the hearing. The testimony from Ms. Ge and Dr. Cameron, as well Dr. Cameron's CT scans, show that the "entire pathway" or "aperture" associated with the branch cable extends completely through the nexus and the mold structure in the same way that the "entire pathway" or "aperture" associated with the trunk cable does. *See* Tr. (Cameron) at 1074:20-1076:12; Tr. (Ge) at 912:13-16 *See* Tr. (Ge) at 911:8-912:17; *see also* RDX-0008C.002.

Dr. Cameron also observed t

Dr. Cameron showed during her testimony how Mr. Brooks' own cross sections also show the same and support that all of the apertures extend completely through the undermold. *See* RDX-0002C.0061; Tr. (Cameron) at 1107:3-13.

Only under Shoals' incorrect application of the Court's claim construction and untenable view of the intrinsic record can Mr. Brooks offer his opinion that the aperture for an input (or branch or "drop line") ends at the outside of the nexus, but the aperture for the feeder cable does not. As the claim is directed to a specific mold structure, Dr. Cameron explained using her annotated cross-section from Mr. Brooks' testimony, (RDX-0002.0032) that there are either two apertures, each that extend completely through the mold structure, or four apertures, each that only extend partially through the mold structure. Tr. (Cameron) at 1074:20-1076:12.

ii. Shoals' infringement theory is inconsistent with and does not apply the *Markman* Order

Only under Shoals' incorrect application of the Court's claim construction and untenable view of the intrinsic record can Mr. Brooks offer his opinion that the aperture for an input (or branch or "drop line") ends at the outside of the nexus, but the aperture for the feeder cable does not. Mr. Brooks is of the opinion that Voltage's Accused Trunk Bus Products must have a second aperture and a third aperture that extend partially through the undermold as long as they have two inputs or branches (or "drop lines"). *See* Tr. 503:8-15 (Brooks); RDX-0002.0027 (summarizing Brooks' direct testimony):

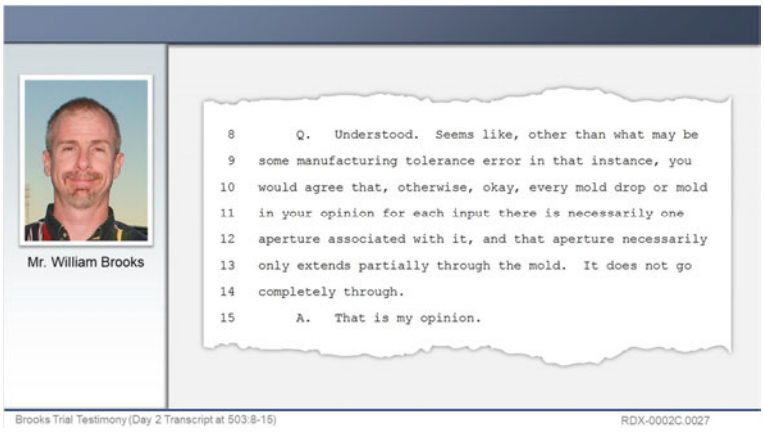

However, as discussed above *supra* Section III.A., Shoals' theory that "the number of drop lines = number of apertures" cannot be correct and would render the mold structure limitations meaningless. As the claim is directed to a specific mold structure, Dr. Cameron explained using her annotated cross-section from Mr. Brooks' testimony, (RDX-0002.0032) that there are either two apertures, each that extend completely through the mold structure, or four apertures, each that only extend partially through the mold structure. Tr. (Cameron) at 1074:20-1076:12.

After extensive examination of numerous witnesses about the terminology or nomenclature surrounding drops, branches, or drop lines to describe the inputs into a cable assembly versus the physical structure that forms apertures within the mold structure or provides the electrical

connection within the *nexus*, Mr. Brooks was unable to identify where his drop lines end within the *nexus*. *See e.g.* Tr. (Brooks) at 551:10-13. Dr. Cameron further explained that because Mr. Brooks (*see* Tr. at 1079:19-1080:8 (Cameron)), *Compare* RDX-0013 and RDX-0014 with RDX-0011C.001 (showing CDX-0005C.56 and CDX-0005C.59 from Mr. Brooks' demonstratives).

The demonstrative above shows that Mr. Brooks necessarily only removed part of what he identified as the drop line in his attempt to apply the *Markman* Order's construction of "aperture." But the *Markman* Order requires the ***entire*** pathway of the drop line when viewed as if the drop line has been removed. Dr. Cameron explained how Mr. Brooks' demonstratives and testimony could not have properly applied the construction of "aperture" in the *Markman* Order. *See* Tr. at 1079:19-1080:8 (Cameron).

As further evidence of Shoals' shifting and inconsistent positions, Mr. Brooks' opinion that the drop line ends somewhere within the nexus, also contradicts Shoals' argument presented during the *Markman* hearing that drop line cable essentially ends outside the nexus because it's crimped against the feeder cable. *See* JX-0298 (*Markman* Tr.) at 209:1- 210:3. Dr. Kenny, in his direct examination regarding the indefiniteness of the term "aperture" referred to this theory as the "Effective Physical Path Test." Tr. (Kenny) at 1196:2-1197:10. Mr. Brooks' hearing testimony appears to have disclaimed Shoals' explanation, as Shoals' fact witnesses all testified that Tr. (Macias) at 203: 9-15; Tr. (Tolnar) 326:4-12.

As the differences between Voltage's AD Trunk Bus configurations and its current Trunk bus configurations only pertain to (*see supra* Section IV.A.2.), Voltage's AD Trunk Bus configurations do not meet this limitation for the same reasons.

b. AD Trunks Bus:

i.

[redacted]

(2) Claims 11, 12, 13, 14 and 18

Claims **[11]**, **[12]**, **[13]**, **[14]** and **[18]** each depend from independent claim **[1]**. Voltage's Accused Trunk Bus products and AD Trunk Bus products do not practice independent claim **[1]** for the reasons explained above, and as a result, does not practice claims **[11]**, **[12]**, **[13]**, **[14]** or **[18]**. See 35 U.S.C. § 112(d); *Duncan Parking Techs. Inc. v. IPS Group, Inc.*, 914 F.3d 1347, at 1360 (Fed. Cir. 2017).

(3) Claim 21

a. [21.b.iv.b] [21.b.iv.c] No second / third aperture that extends only partially through the primary mold

Claim limitation **[21.b.iv.b] [21.b.iv.c]** has the same substantive limitations regarding the first aperture extending completely through and second/third aperture extending partially through the primary mold as claim limitation **[1.c.ii] [1.c.iii]** with respect to the second/third apertures through the undermold. For the same reasons that the inner mold of the Voltage's Accused Trunk Bus products and AD Trunk Bus products do not meet claim limitation **[1.c.ii] [1.c.iii]** and thus do not infringe claim **[1]**, they also do not infringe claim **[21]**.

b.] AD Trunks Bus:

c. **AD Trunks Bus:**

i.

[redacted]

[redacted]

[redacted]

[redacted]

[redacted]

ii. [redacted]

[redacted]

[redacted]

[redacted]

[redacted]

[redacted]

[redacted]

[redacted]

[redacted]

[redacted]

[redacted]

[redacted]

(4) Claim 23

Claim 23 depends from independent claim **[21]**. Voltage's Accused Trunk Bus products and AD Trunk Bus products do not practice independent claim **[21]** for the reasons explained above, and as a result, do not practice claim **[23]**. See 35 U.S.C. § 112(d); *Duncan*, 914 F.3d at 1360.

(5) **Claim 24**

a. **[24.b.iii.b] No second aperture that extends only partially through the primary mold**

Claim limitation **[24.b.iii.b]** has the same substantive limitations regarding the second aperture extending partially through the primary mold as the as claim limitation **[1.c.ii]** with respect to the second aperture and the undermold. For the same reasons that Voltage's Accused Trunk Bus products and AD Trunk Bus products do not meet claim limitation **[1.c.ii]** and thus do not infringe claim **[1]**, they also do not infringe claim **[24]**.

b. **AD Trunks Bus:**

c.

V. U.S. PATENT 11,689,153 -NO DI – TECHNICAL PRONG

A. Representative Products

Shoals bears the burden of demonstrating by a preponderance of the evidence that the products its expert analyzed are in fact representative of each of the other products alleged to practice the asserted patents. *See, e.g., Certain Replacement Auto. Lamps II*, Inv. No. 337-TA-1292, Initial Determination at 110-112, EDIS Doc. ID 789302 (Jan. 23, 2024), *citing Multimedia Display and Navigation Devices*, Inv. No. 337-TA-694, Comm'n Op. at 5 (August 8, 2011); see also 19 C.F.R. § 210.37 ("The proponent of any factual proposition shall be required to sustain the burden of proof with respect thereto."). The record from the evidentiary hearing confirmed that Shoals failed to do so for both its infringement allegations and for the technical prong for domestic industry (DI). The latter is most concerning considering "complainants are in a unique position with respect to the issue of domestic industry, because 'the complainant has the luxury of being able to fully prepare its domestic industry case even before filing the complaint' and all information relating [complainant's] asserted domestic industry was within [complainant's] possession, custody, and control." *Certain Light-Based Physiological Measurement Devices and Components Thereof*, Inv. 337-TA-1276, Order No. 32 at 8, EDIS Doc. ID 771338 (May 5, 2022). Despite that unique position, Shoals and Mr. Brooks came far short of putting on a representative product analysis at the evidentiary hearing. While its disclosures for the Voltage accused products was better, that was only because Voltage – in response to Shoals' discovery demands – provided fifteen product samples covering every inner mold structure configuration for the LYNX Trunk Bus products. But even with this discovery, Shoals failed to analyze each configuration or account for differences between them, including, for example, LYNX Trunk Bus products having an odd number of branches. Shoals failed to do so for both Voltage's LYNX Trunk Bus products and its own BLA assemblies, the latter of which dooms Shoals alleged domestic industry.

1. Order No. 28 and Limitations on Brooks' Testimony on Representativeness

Before the evidentiary hearing, Voltage filed a motion in *limine* seeking to preclude Shoals' infringement and technical domestic industry expert from offering new opinions on representative products at the hearing. The ALJ issued an order finding that "Mr. Brooks' report does not include the opinion that any specific product is representative of the domestic industry products for purposes of the 153 patent nor does Shoals point to any portion of his expert report or deposition where he provides any representativeness opinion or analysis." Order No. 28 at 4. As a result, the ALJ found that "any testimony from Mr. Brooks opining on representative with respect to the domestic industry products and 153 patent would fall outside the scope of his expert report and deposition" and that his hearing testimony "shall be limited to testimony within the scope of his expert report and deposition, which Shoals has not to include a representative product analysis for the 153 patent." *Id.*

At the hearing, Voltage and Staff raised an objection to Mr. Brooks' disclosed exhibits and demonstratives, as they suggested that Shoals intends to elicit testimony from Mr. Brooks regarding representative products in violation of Order No. 28, including by identifying on his exhibit list Shoals' Intertek Report. The ALJ heard argument on Voltage and Staff's objections and before Mr. Brooks took the stand, the parties reached an agreement to resolve the objections. Shoals agreed it would not elicit testimony from Mr. Brooks regarding the Shoals' Intertek Report, but that identified testimony from his deposition would be submitted into evidence. Tr. (Counsel Discussion) at 260:16-262:16.

With no expert to opine on representativeness, Shoals attempted at the hearing to back-fill these deficiencies through its fact witnesses. But the evidentiary record from the hearing confirms that Shoals cannot meet its burden in establishing representative products for its domestic industry products.

2. Shoals' Fact Witnesses Did Not Establish Representativeness

In response to Voltage's motion *in limine*, Shoals suggested that its chief revenue officer, Ben Macias, would "establish[] that the various configurations of the Shoals BLA and in-line fuse domestic industry products have substantially similar design and operation as those depicted in Mr. Brooks' report". The ALJ's Order No. 28 allowed "Mr. Macias (or other fact witnesses) to provide factual testimony based on personal knowledge regarding specific components and features of various Shoals products, including testimony that certain products have or do not have certain specific components or features, as well as the nature of any differences among specific components and features." Order No. 28 at 7. The ALJ, however, warned that the fact witnesses may not "offer testimony concluding that, for example, certain products are 'representative' or 'substantially similar' on a generalized basis." *Id.*

None of Shoals' three fact witnesses, Ben Macias, Jeff Tolnar, or Dominique Bardos, provided sufficient testimony for Shoals to establish that the physical sample that Mr. Brooks cut open and analyzed (a two drop BLA), or the images included in his expert report claim chart, were representative of all of Shoals' BLA configurations. Rather, the fact witnesses' testimony at the hearing showed a coordinated effort to characterize its BLA to fit Shoals' litigation positions, despite being unsupported (and contradicted) by Shoals' documents an its witnesses' prior testimony.

For example, on direct examination of Ben Macias, Shoals' chief revenue officer, Mr. Macias repeatedly and consistently called each of the BLAs shown in CX-0235C (BLA Datasheet) "mold drops" and each of the small cables (or "inputs") going into the mold drop a "drop line." Hr. Tr. 121:8-122:5 (Macias). Mr. Macias then testified that Sholas could also sell "a five-input mold drop and there could be a seven-input mold drop." Hr. Tr. 122:7-12.

[redacted]

When asked by counsel what exhibit CPX-36 (photo below) is, Mr. Macias called it a "four-input mold drop – one, two, three, four those are the drop lines – and then this is the DC feeder cable." When asked about this nomenclature on cross-examination, Mr. Macias testified under oath that he "[a]lways referred to them as input leads or drop lines." Hr. Tr. 150:16-19. He said he did not believe Shoals' documentation called them branches, but acknowledged that you could refer to them as branches. Hr. Tr. 149:1-13; 150:2-8 (Macias). Mr. Macias further testified that Shoals' internal document and communications would refer to them as "input leads or drop lines." Hr. Tr. 150:9-15 (Macias). Mr. Macias also would not agree that the BLA is a wire harness. Hr. Tr. 147:17-21 (Macias). For example, the "Installation and Operating Instructions" for "Shoals BLA Harness Assembly" (JX-0098) repeatedly refers to the BLA as "wiring harness." It also refers to the "small cables" as "branches" – not "inputs" or "drop lines" as Mr. Macias testified under oath, as shown in the table of excerpts below:

JX-0098: Shoals BLA Harness Assembly – Installation and Operating Instructions	
p. 3	This manual contains important instructions for the Shoals BLA Wiring harness that must be followed during the installation and maintenance of these wiring harness. **YOU MUST FOLLOW ALL THESE INSTRUCTION DURING INSTALLATION AND/OR MAINTENANCE OF THESE WIRING HARNESSES.** **WARNING! THE INSTALLATION OF PV WIRING HARNESSES INVOLVES RISK OF CONTACT WITH POTENTIALLY LETHAL VOLTAGES AND CURRENTS.**
p. 6	Shoals Technologies Group **Product Description** The Shoals BLA wiring harness with in line fuses has been patented and provides a means of combining multiple PV arrays into a single DC source. The Shoals BLA harness replaces the combiner boxes using patented interconnect joints to reduce the amount of wire required by combining the wires in the harness prior to the inverter. The Shoals BLA wiring harness used with the Shoals component harnesses enable the installer to not have to make any electrical connections in the field. The Shoals wiring harnesses are designed and sized for each installation. Use only the harnesses supplied for the recommended installation. The harness is designed for a maximum of 1000V or 1500V per the customer requirements.

[redacted]

p. 6	**Models** The Shoals BLA harness is made of several junctions which may or may not include a fuse assembly. These models will have a unique model number for each installation. The model number is STG.PH.T.B.C.JOINT.FUSE.CUSTOMER Where: PH is the harness type. PH, NH or W for positive, negative or whip 600 V, PHK, NHK or WK for 1000V, PHM, NHM or WM for 1500V T is the trunk wire gauge. if copper will be 1 for 14 AWG, 2 for 12 AWG, 3 for 10 AWG, 4 for 8 AWG, 6 for 6 AWG, 7 for 4 AWG, 8 for 3 AWG, 9 for 2 AWG, 10 for 1 AWG, 11 for 1/0, 12 for 2/0, 13 for 3/0, 14 for 4/0, 15 for 250 MCM, 15 for 300 MCM, 16 for 350 MCM, 17 for 400 MCM. If aluminum will be A for 4 AWG, B for 3 AWG, C for 2 AWG, D for 1 AWG, E for 1/0, F for 2/0, G for 3/0, H for 4/0, J for 250 MCM, K for 300 MCM, L for 350 MCM, M for 400 MCM, N for 500 MCM, O for 600 MCM B is the branch gauge. 0 for no branch, 2 for 12 AWG, 3 for 10 AWG, 4 for 8 AWG C is the connector type 1 for Shoals S4, 2 for Multi-Contact, 3 for Amphenol, 4 for Tyco, 5 for SMK, 6 for Yamachi, 7 for Friends, 8 for Sunter (If multiple connectors are used C-C will be used) JOINT is the joint type and number. B for BLA
p. 6	**Components** The STG wiring harness may contain the following components: • **Positive Connector** - Electrical connector to mate with the PV panel. • **Negative Connector –** Electrical connector to mate with the PV panel. • **PV wire** - Photovoltaic wire used to transmit the power from the solar array to the combiner box. All wire is rated for PV use and 90°C rated. • **BLA joint** – Shoals developed interconnection at the intersection the truck cable and the branch wires. • **In Line Fuse** - Shoals fuse assembly with the required fuse rating included The wire harness will be rated based on the wire size of the branch cables and the trunk cable. Branch lengths must be 12, 10 or 8 AWG copper wire.

This BLA Harness Instruction Manual is not an isolated exception to Mr. Macias' testimony. For example, on cross-examination, Shoals' chief financial officer, Dominque Bardos, admitted that the [redacted] Hr. Tr. 793:21-794:1. Mr. Bardos was confused as to whether he could or should call them "drops" or if it was okay to make that admission on the stand:

[redacted]

[redacted]

Hr. Tr. 778:8-14 (Bardos).

But despite Mr. Macias' testimony that he [redacted], Shoals' technical expert, Mr. Brooks, who has worked in the solar industry for 30 years and claims to have reviewed thousands of Shoals documents in preparing his opinions in this Investigation, could not think of a single, non-patent related document from Shoals that used the term "drop line." CITE. In fact, Mr. Brooks admitted it was not an industry term and that he would not be surprised if not a single Shoals non-patent document used the term "drop line" to refer to a branch, input or drop. CITE.

3. The Shoals Intertek Report Does Not Establish Representativeness

Having no fact or expert witness able to establish representativeness for any particular BLA configuration for all BLA harnesses, Shoals telegraphed at the hearing that it would see to establish representativeness based on its Intertek Report. But even Mr. Brooks, who testified on direct about the Voltage Intertek report, confirmed on cross-examination that generally, an Intertek Report would not refer specifically to a patent, such as the 153 patent, or analyze drop lines or apertures, for purposes of its certification report. Hr. Tr. at 603:12-604:16.

B. Shoals DI Products Do Not Practice the '153 Patent

(1) Claim 1

a. [1.c] No second/ third aperture that extends only partially through the undermold

For the same reasons explained for these limitations for Voltage's Accused Trunk Bus products and AD Trunk Bus products (*see* Section XXXXX), Shoals' BLA products do not meet the limitation for "second aperture that extends only partially through the undermold" or "third aperture that extends only partially through the undermold."

[redacted]

During the discovery, Shoals only produced one sample for its BLA product, a quad-drop BLA and this is the one that Dr. Cameron examined. *See* Tr. at 1093:7-1094:2. As shown on in Dr. Cameron's CT scan for Shoals' BLA product sample, the "pathway" for the drop line cable is very clearly still in physical existence, just as is the "pathway" of the feeder cable that Shoals argues extends completely through the undermold. *See* RPX-0004C; RPX-0004.4C, RDX-0002C.0047; *see also* Tr. (Cameron) at 1095:2-1099:2. The "3D hole" for each drop line cable, same as the "3D hole" for the feeder cable, extends complete through the undermold. *Id.* Therefore, there is no second aperture extending partially through the undermold nor third aperture extending partially through the undermold.

[redacted]

Shoals does not dispute that for this Shoals BLA product sample, it uses the same cable to form two drops. Moreover, Shoals' or Mr. Brooks' cross sections also show the same as Dr. Cameron's CT Scan and support that all apertures extend completely through the undermold. *See* RDX-0002C.0044-0046; Tr. (Cameron) at 1094:3-1095:1.

[redacted]

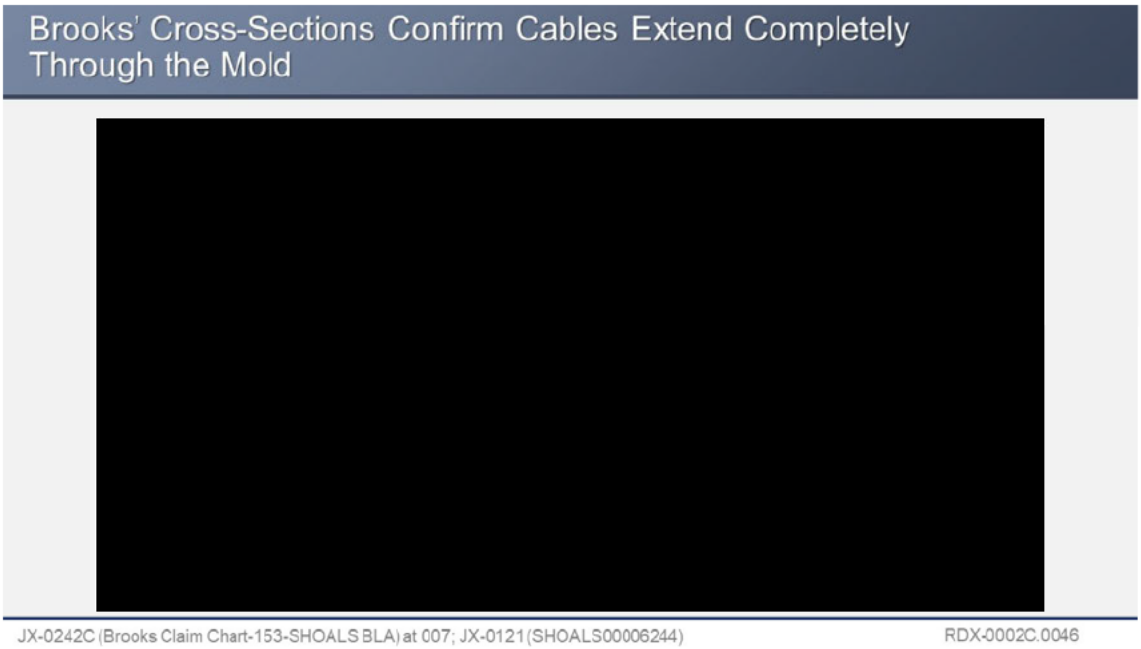

(2) Claims 11, 12, 13, 14 and 18

Claims **[11], [12], [13], [14]** and **[18]** each depend from independent claim **[1]**. Shoals' BLA does not practice independent claim **[1]** for the reasons explained above, and as a result, does not practice claims **[8], [11], [12], [13], [14]** or **[18]**. See 35 U.S.C. § 112(d); *Duncan*, 914 F.3d at 1360.

(3) Claim 21

Claim limitation **[21.b.iv.b] [21.b.iv.c]** has the same substantive limitations regarding the first aperture extending completely through and second/third aperture extending partially through the primary mold as claim limitation **[1.c.ii] [1.c.iii]** with respect to the second/third apertures through the undermold. For the same reasons that Shoals' BLA products do not meet claim limitation **[1.c.ii] [1.c.iii]** and thus do not practice claim **[1]**, they also do not practice claim **[21].**

(4) Claim 23

Claim 23 depends from independent claim **[21]**. Shoals' BLA products do not practice

independent claim **[21]** for the reasons explained above, and as a result, do not practice claim **[23]**. See 35 U.S.C. § 112(d); *Duncan*, 914 F.3d at 1360.

(5) Claim 24

Claim limitation **[24.b.iii]** has the same substantive limitations regarding the first aperture extending completely through and second aperture extending partially through the primary mold as the as claim limitation **[1.c]** with respect to the first and second apertures and the undermold. For the same reasons that Shoals' BLA products do not meet claim limitation **[1.c]** and thus do not practice claim **[1]**, they also do not practice claim **[24].**

C. '153 Patent Validity

4. Legal Standard

A patent is invalid for obviousness "if the differences between the claimed invention and the prior art are such that the claimed invention as a whole would have been obvious" to one of ordinary skill in the relevant art. *Intercontinental Great Brands LLC v. Kellogg N. Am. Co.*, 869 F.3d 1336, 1343 (Fed. Cir. 2017) (citing 35 U.S.C. § 103). There is "the need for caution in granting a patent based on the combination of elements found in the prior art." *KSR Int'l Co. v. Teleflex Inc.*, 550 U.S. 398, 415 (2007). "The combination of familiar elements according to known methods is likely to be obvious when it does no more than yield predictable results." *Id*. at 416-17 (citations omitted). Thus, the operative question when assessing whether a claimed invention would have been obvious is "whether the improvement is more than the predictable use of prior art elements according to their established functions." *Id*. at 417.

A claim is invalid for indefiniteness "if its claims, read in light of the specification delineating the patent, and the prosecution history, fail to inform, with reasonable certainty, those skilled in the art about the scope of the invention." *Nautilus, Inc. v. Biosig Instruments, Inc.*, 572

U.S. 898, 901 (2014). The definiteness requirement requires both "written description" and "enablement." *Enzo Biochem, Inc. v. Gen-Probe Inc.*, 323 F.3d 956, 963 (Fed. Cir. 2002). The written description requirement can be met by showing "that an invention is complete by disclosure of sufficiently detailed, relevant identifying characteristics … *i.e.*, complete or partial structure, other physical and/or chemical properties, *functional characteristics when coupled with a known or disclosed correlation between function and structure*, or some combination of such characteristics." *Id*. at 964 (citation omitted) (emphasis in original). The enablement requirement can be met by showing that "a patent's specification describe the invention 'in such full, clear, concise, and exact terms as to enable any person skilled in the art' to 'make and use' the invention." *Amgen Inc. v. Sanofi*, 598 U.S. 594, 612 (2023).

5. Obviousness over *Yamawaki-Shao* Combination

U.S. Patent No. 6,268,559 to Yamawaki (RX-0052) in view of Chinese Patent No. CN2785100Y to Shao (RX-0097) renders obvious claims 1, 12-14, 18, 21, 23, and 24 under all proposed claim constructions. Tr. (Kenny) at 1200:6-13.

b. Overview of *Yamawaki*

Yamawaki is prior art to the '153 Patent. Yamawaki, filed on Oct. 6, 1999, was issued on July 31, 2001. RX-0052, at 1. Therefore, Yamawaki is prior art under 35 U.S.C. § 103. Tr. (Kenny) at 1200:18-20. Yamawaki, titled "Photovoltaic Generation System, Wiring Apparatus for Photovoltaic Generation System, and Wiring Structure Therefor," describes the use of solar panels to generate energy in solar installation. Tr. (Kenny) at 1201:13-14.

While Yamawaki was considered during the prosecution of the '254 patent and the '153 patent, how the Examiner analyzed Yamawaki during prosecution actually supports Voltage's invalidity positions. Tr. (Kenny) at 1201:15-1202:12; JX-0087.0002; JX-0089.0003. The '153

[redacted]

patent was issued after the applicant amended the independent claims to adopt the limitations reciting the third aperture with the second drop line following the examiner's recommendation in order to overcome a rejection based on Yamawaki and Vander Ploog, which will be discussed below, *infra*. Tr. (Kenny) at 1201:15-1202:12; Tr. (Cameron) at 1062:9-1063:10; *see also* RDX-0003.0056 (citing JX-0088.0123-24, 0255-56).

Shoals' expert Mr. Weiner attempts to distinguish Yamawaki's residential solar system from the '153 patent's allegedly utility-scale system. *See* Tr. (Weiner) at 1260:3-23, 1269:17-1271:22. Mr. Weiner argued that Yamawaki is distinguishable from the '153 patent because Yamawaki is directed to a residential solar system which requires adjustability, while the solar arrays used in utility-scale solar system are very uniform and standard. Tr. (Weiner) at 1270:18-1271:2, 1273:8-1274:5. However, as discussed above in POSA section, *supra*, the claims of the '153 patent and the prosecution history rather support that the '153 patent is not limited to "utility scale" solar installations. JX-0085.0270, 0272, 0286-87. Nor do the claims of the '153 patent require any pre-fabrication that would distinguish the architecture of electrical connections and cable assemblies of Yamawaki from what is claimed.

c. Overview of *Shao*

Shao is prior art to the '153 Patent. Shao is a Chinese patent which was filed on January 13, 2005, and issued on May 31, 2006. RDX-0003.0057 (citing RX-0097, at 1); Tr. (Kenny) at 1202:13-18. Therefore, Shao is prior art under 35 U.S.C. § 103. Tr. (Kenny) at 1200:20-22.

Shao, titled "Power branch with bidirectional K-shaped branch," relates to power distribution in electrical wiring systems. Tr. (Kenny) at 1202:16-1203:3; RX-0097, at 1. Shoals previously argued that Shao does not qualify as prior art to the '153 Patent because it is not analogous to the '153 Patent. Shoals' Motion *in limine* No. 4, at 1, 3. As Shoals correctly noted

in its motion, two criteria for determining whether prior art is analogous is "(1) whether the art is from the same field of endeavor, regardless of the problem addressed, and (2) if the reference is not within the field of the inventor's endeavor, whether the reference still is reasonably pertinent to the particular problem with which the inventor is involved." Shoals' Motion *in limine* No. 4, at 3 (citing *Netflix, Inc. v. DivX, LLC*, 80 F.4th 1352, 1358 (Fed. Cir. 2023)). Under these criteria, however, Shao is analogous art to the '153 Patent.

First, Shao is analogous art because Shao is in the same field of endeavor as the '153 Patent. The '153 Patent relates to "electrical components, and more specifically to assemblies for connecting solar panel arrays to an inverter, without the need of a combiner box." JX-0089, at 1:21-24. The essence of the invention is to provide electrical components, cable junctions, and lead assemblies which can "'combine' the power from solar arrays 32 and deliver it to inverter 38." JX-0089, at 6:16-19. To transfer energy from the solar arrays to the inverter, and to maintain charge neutrality of the solar panels, there has to be a return current that returns along the harness and is distributed back to the individual solar cells of the solar array. Tr. (Kenny) at 1174:11-1175:12. The claims recite a structure of the lead assembly, which is applicable to all other electrical components and assemblies that combines and distributes current, but is not necessarily unique to the assemblies for photovoltaic devices. *See* Tr. (Kenny) at 1174:11-1184:1.

The invention is about the structure of the lead assembly between the solar panels and the inverter highlighted in Fig. 4 of the '153 Patent, shown below. Tr. (Kenny) at 1177:21-24, 1179:4-14. Just like the '153 Patent, Shao relates to "a structure of a branch cable" for use in a power distribution system. RX-0097, at 4. Power distribution cables are electrical components which should ensure "good electrical conductivity and mechanical properties." RX-0097, at 6.

Moreover, while Shoals tries to distinguish that Shao is in the field of distribution of AC power while the ’153 patent relates to distribution of DC power, (Shoals’ Motion *in limine* No. 4, at 9-10; Tr. (Weiner) at 1282:17-1285:19), the same structure of a lead assembly can be implemented either to distribute DC or AC currents. Tr. (Cameron), at 1051:10-23, 1053:5-8. Thus, Shao is in the same field of endeavor as the ’153 Patent as it relates to a structure used to distribute current.

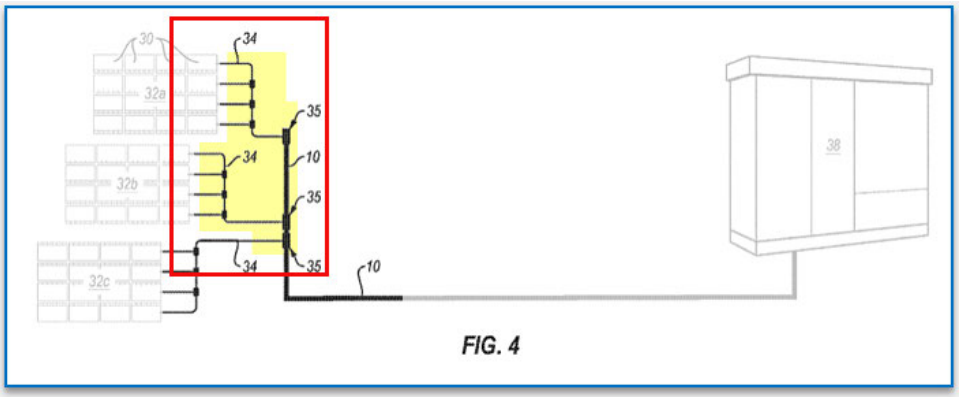

JX-0089, Fig. 4 (annotated); *See also* RDX-0003.0014 (citing JX-0089, Fig. 4 (annotated)).

Second, to the extent Shao is not in the same field of endeavor as the ’153 Patent, Shao is still reasonably pertinent to the particular problem which the ’153 Patent intends to improve. One object of the ’153 Patent is to provide a device which “is small, inexpensive to manufacture and transport, and easy to use.” JX-0089, at 1:55-59. Another object of the ’153 Patent is to provide an assembly that is “profoundly durable, resistant to environmental factors such as temperature fluctuations, debris, and moisture, and is strong enough to be buried.” JX-0089, at 6:10-13. The object of Shao’s branch connector is similar to the ’153 Patent, as Shao describes that its bidirectional K-shaped branch, which has few branch joints and multiple out-leads is easy to mount and use. RX-0097, at 4; *see also* Tr. (Kenny) at 1207:22-24. Shao further improves the sealing performance of the joint to have a joint which is moisture-proof, waterproof, and maintenance-free. RX-0097, at 5-6; *see also* Tr. (Kenny) at 1207:25-1208:3. Thus, Shao is

analogous art which is reasonably pertinent to the particular problem which the ’153 Patent intended to improve.

d. The *Yamawaki-Shao* Combination Would Have Been Obvious

i. Motivation to combine *Yamawaki* and *Shao*

Dr. Kenny explained during his direct testimony that a POSA would have been motivated to combine Yamawaki with Shao. Tr. (Kenny) at 1206:23-1209:12. A POSA would have found it obvious to combine Yamawaki with, or modify it based on, the disclosures of Shao because, for example, Shao comes from the same field of endeavor, uses known techniques to improve similar devices in the same way, and represents a choice among a finite number of identified, predictable solutions. Such a modification or substitution would have been both obvious to try and simple, requiring nothing more than a simple substitution of one known element for another to obtain predictable results. Moreover, a POSA would have had a reasonable expectation of success for the combination or substitution, because the claimed disclosures were well-known at the time the application leading to the ’153 Patent was filed.

Both Yamawaki and Shao are in the same field of art. Yamawaki describes a wiring apparatus for solar installation. Tr. (Kenny) at 1207:11-12; RX-0052, at 1:7-12. One object of Yamawaki, for example, is “to provide a wiring apparatus for a photovoltaic generation system, whereby the necessary number of electric wires … can be reduced, and which can be easily laid with a lower possibility of wrong wiring.” RX-0052, at 2:44-56; *see also* Tr. (Kenny) at 1207:11-17. Yamawaki further provides a wiring apparatus which improves the maintainability of photovoltaic modules and reliability of water proofing of branch junctions. RX-0052, at 2:52-56, 62-65; *see also* Tr. (Kenny) at 1207:18-21. The object of Shao’s branch connector is similar to Yamawaki, as Shao describes that its bidirectional K-shaped branch, which has few branch joints

and multiple out-leads is easy to mount and use. RX-0097, at 4; *see also* Tr. (Kenny) at 1207:22-24. Shao further improves the sealing performance of the joint to have a joint which is moisture-proof, waterproof, and maintenance-free. RX-0097, at 5-6; *see also* Tr. (Kenny) at 1207:25-1208:3. Thus, Yamawaki and Shao both relate to electrical cables that allow efficient installation and provide increased reliability. Yamawaki provides limited description of the interior structure of the cable junction. Therefore, a POSA considering Yamawaki would be motivated to improve Yamawaki based on Shao, which also describes a junction with branch cables and a trunk cable and describes the interior structure of that junction in much more detail. *Compare* Tr. (Kenny) at 1209:2-12, *with* Tr. (Weiner) at 1268:8-1269:16.

To the extent Yamawaki and Shao are not in the same field of endeavor, Shao is still reasonably pertinent to the particular problem which Yamawaki intends to improve, such as efficient installation and increased reliability. A POSA familiar with the challenges of bringing many separate wires all the way to a connector, and appreciating the benefits of a system consisting of a plurality of branch cables being connected to the main trunk cables which can feed straight to the inverter, would have been motivated to combine Yamawaki with the teaching of Shao to implement a bidirectional K-shaped branch structure with few branch joins and multiple out-leads.

ii. The examiner's combination of *Yamawaki* and *Vander Ploog* corroborates the motivation to combine *Yamawaki* and *Shao*.

The prosecution history of the '153 Patent further supports the motivation to combine *Yamawaki* and *Shao*. As discussed above in section I.E (the POSA section), *supra*, during prosecution, the '153 Patent was rejected over Yamawaki in combination with Vander Ploog.

[redacted]

JX-0088.0076-77, 0247-54; Tr. (Kenny) at 1202:7-12; Tr. (Cameron) at 1062:9-14. The ’153 patent was issued after the applicant amended the independent claims to adopt the limitations reciting the third aperture with the second drop line following the examiner’s recommendation. Tr. (Kenny) at 1201:15-1202:6; Tr. (Cameron) at 1062:15-1063:10; *see also* RDX-0003.0056 (citing JX-0088.0123-24, 0255-56).

Vander Ploog is a patent on electrical connectors in general from 1974, ***forty years*** before the provisional application that led to the ’153 Patent, and outside of the field of solar installations. Tr. (Kenny) at 1202:10-12; JX-0089.0002. During prosecution of the ’153 patent, the examiner expressly identified and considered prior art on broader categories such as H02G for electrical cables for power distribution, and H01R for electrical connectors and coupling devices that do not relate to solar power technology, in addition to prior art on solar installations such as Yamawaki. Tr. (Kenny) at 1209:13-1210-4, 1211:3-11, 1211:23-1212:9; JX-0089.0002-03.

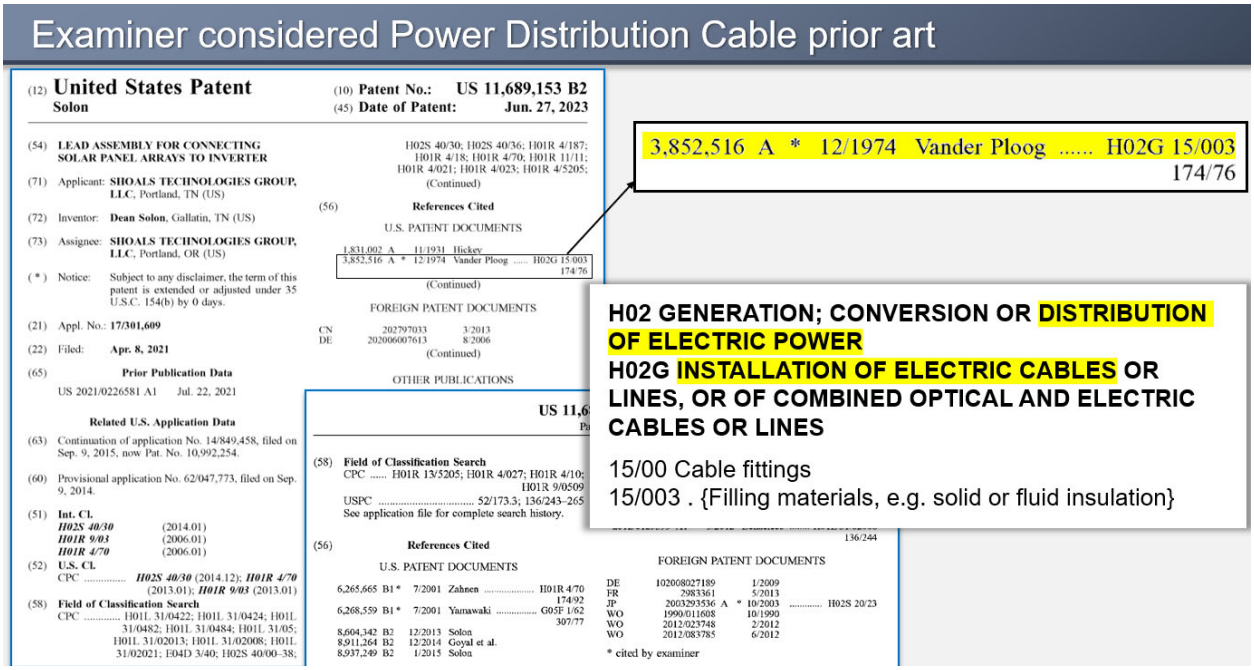

(RDX-0003.0069 (citing JX-0089.0002-03)).

[redacted]

As shown above on the cover page of the ’153 patent, Vander Ploog is a patent classified under H02G, which relates to electric cables or lines for generation, conversion or distribution of electric power. Notably, Yamawaki, in combination with Vander Ploog was the basis for the last rejection of the application leading to the ’153 patent before it was subsequently amended and issued. JX-0088.0076-77, 0247-54; Tr. (Kenny) at 1202:7-12, 1210:5-14; Tr. (Cameron) at 1062:9-1063:10. This last rejection was accompanied by the examiner’s identification of allowable matter in dependent claims (that added a third aperture and second drop line). JX-0088.0255; Tr. (Cameron) at 1062:15-1063:10. The examiner’s combination of Yamawaki and Vander Ploog confirms that a POSA at the time of the filing of the ’153 patent would have considered Shao, which relates to electric cables for power distribution, just like Vander Ploog. Tr. (Kenny) at 1210:15-25. What Shao discloses is exactly the claim limitation which the applicant added to the independent claims to overcome the rejection over Yamawaki and Vander Ploog – the second drop line and the third aperture limitations.

Shoals’ argument that Shao is not analogous art, (Order No. 26, at 2, 4; Tr. (Weiner) at 1283:11-19), is undermined by its own position during prosecution of the ’153 patent. In prosecution, Shoals never argued that Vander Ploog should not be considered as prior art or should not be combined with Yamawaki during prosecution based on the reasoning that Vander Ploog is not analogous art to the ’153 patent or Yamawaki. Tr. (Kenny) at 1211:12-22; JX-0088.0129, 0277 (identifying prosecution counsel responding to the examiner’s rejection based on Yamawaki-Vander Ploog combination). Without objection regarding non-analogous art as Shoals argues in this proceeding, the applicant simply acquiesced and amended the pending claims according to the examiner’s identification of allowable matter without comment. Shoals and its counsel’s acquiescence during prosecution (while it prepared to file the complaint in this

[redacted]

Investigation), undermines its arguments now that Shao, which is a patent on electrical branch junction for power distribution, is analogous art, which can be combined with Yamawaki.

e. Claim 1

i. Claim [1.p]

To the extent limiting, *Yamawaki* discloses claim element [1.p]. *See* Tr. (Kenny) at 1203:4-11. *Yamawaki* describes a wiring apparatus and a wiring structure for conducting electric power produced by the generation system into buildings. *Id.*; RX-0052, at 1:7-12, Fig. 1.

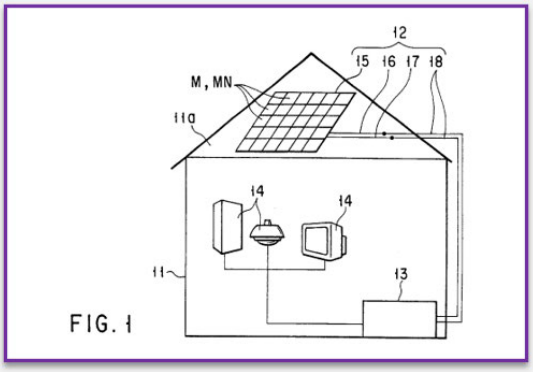

The present invention relates to a photovoltaic generation system capable of obtaining electric power by means of photovoltaic cells arranged on, for example, a roof of a building, and a wiring apparatus and a wiring structure for conducting electric power produced by the generation system into the building such as a house.

RDX-0003.0058 (citing RX-0052, at 1:7-12).

ii. Claim [1.a]

[redacted]

Yamawaki discloses claim element [1.a]. As shown in annotated Fig. 8A, *Yamawaki* discloses a drop line 32 (annotated in yellow) terminating at a drop line connector 34 (annotated in red). *See* RX-0052, at 65-66, 11:3-7, Fig. 8A; Tr. (Kenny) at 1203:12-17. *Yamawaki* further discloses the drop line connector 35 (annotated in red below in Fig. 3) configured to connect with a central trunk of a wire harness (annotated in orange), the central trunk of the wire harness having a plurality of branches that each are configured to electrically connect to a separate solar panel contained in an array of a plurality solar panels. Tr. (Kenny) at 1203:18-1204:6; RX-0052 at 7:54-8:20, Fig. 3. While the plurality of branches of the wire harness is not shown in Fig. 3, *Yamawaki* clearly describes a wire harness that captures current from individual solar cells in a solar array. Tr. (Kenny) at 1203:18-1204:6.

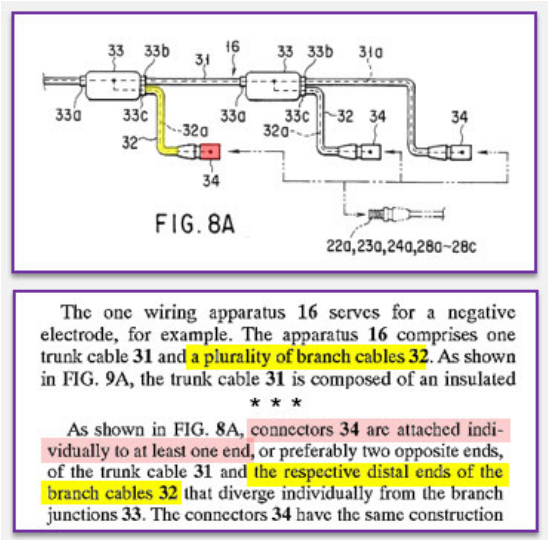

RDX-0003.0059 (citing RX-0052 at 9:65-66, 11:3-7, Fig. 8A)

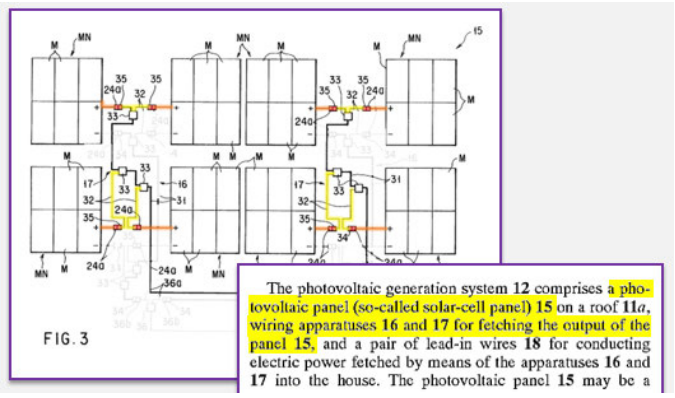

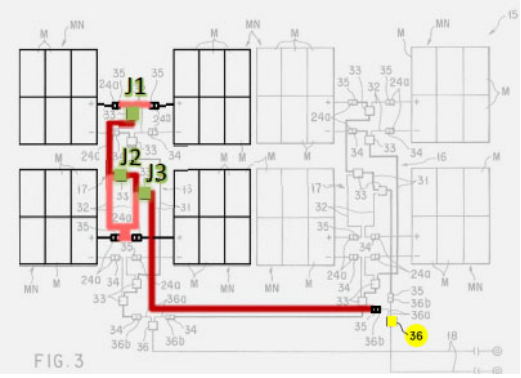

Compare RDX-0003.0060 (RX-0052 at 7:54-8:20, Fig. 3) (left) *with* CDX-0016.16 (right).

Shoals' expert Mr. Weiner provided a different interpretation of Fig. 3 of Yamawaki, by mapping branch cables 32 (annotated in yellow (left), annotated in pink (right)) to the branch of

the wire harness, but not to drop lines. Tr. (Weiner) at 1272:9-23, 1277:9-1278:12. Mr. Weiner argued that "Dr. Kenny just relabels it (annotated in red (left)) as a drop-line connector probably to make it look as much like a lead assembly as possible." Tr. (Weiner) at 1277:22-24. The wire harnesses 34 of the '153 patent connect multiple solar panels 30 in an array 32, (JX-0089, at 1:37-39; Tr. (Weiner), at 1265:4-7), and a plurality of wire harnesses are coupled to a lead assembly that connects to an inverter. JX-0089, at 2:28-30. The lines directly connected to solar panels in Fig. 3 of Yamawaki (annotated in orange (left)), which Dr. Kenny mapped to the wire harness, meet this definition of wire harness in the '153 Patent as they connect multiple solar panels in an array. Mr. Weiner overlooks these definitions of lead assembly and wire harness, which he confirmed himself, (Tr. (Weiner), at 1265:4-7), and even ignored the lines directly connected to solar panels in Fig. 3 of Yamawaki (annotated in orange (left)) to make it appear as different from the alleged invention of the '153 patent (depicted in Fig. 4) as possible. Mr. Weiner's distinction is insignificant though because the wire harness and the lead assembly operate in exactly the same manner. Tr. (Kenny) at 1180:15-1181:3. As Shoals' provisional patent application confirmed, the lead assembly is a wire harness that works at a larger scale. *Id.*; Tr. (Cameron) at 1049:15-1050:7, 1050:16-1051:4; *see also* RX-0096, at 22 (provisional application of the '153 patent describing Shoals BLA as a harness).

iii. Claim [1.b]

Yamawaki discloses claim element [1.b]. As shown in annotated Fig. 8A, *Yamawaki* discloses a feeder cable 31 (annotated in blue) electrically coupled to the drop line 32 (annotated in yellow) at a nexus 33 (annotated in green). Tr. (Kenny) at 1204:7-12; RX-0052 at 9:65-66, 10:30-32, Fig. 8A. Mr. Weiner confirmed that it is clear that there is an electrical connection being made at the junction 33, although it is not very clear in how that electrical connection is

made. Tr. (Weiner) at 1281:12-17.

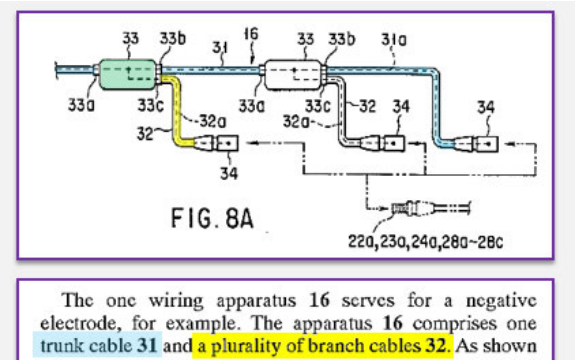

RDX-0003.0061 (citing RX-0052 at 9:65-66, 10:30-32, Fig. 8A)

iv. Claim [1.c]

The *Yamawaki-Shao* combination discloses claim element [1.c]. Tr. (Kenny) at 1204:14-1205:17, 1205:25-1206:22. As shown in annotated Fig. 9B below, Yamawaki discloses an undermold 33e that fully encases the nexus. Tr. (Kenny) at 1204:14-20; RX-0052 at 10:19-32, Fig. 9B. Mr. Weiner argued that Yamawaki does not teach an undermold. Tr. (Weiner) at 1278:13-1279:10. However, Yamawaki clearly describes 33e as a "molded body 33e of an electrically insulating synthetic resin material," (RX-0052, at 10:19-21), and Mr. Weiner also confirmed that Yamawaki discloses a molded body. Tr. (Weiner) at 1279:5-7.

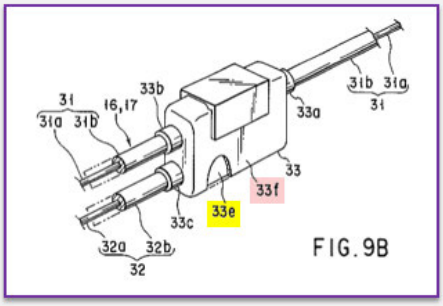

cable 31. As shown in FIGS. 9A and 9B, each junction **33** includes a molded body **33*e*** of an electrically insulating synthetic resin material and a cover member **33*f*** that covers the outer surface of the body **33*e***. A cylindrical trunk cable connecting portion **33*a*** protrudes integrally from one end face of the cover member **33*f***. A cylindrical trunk cable

RDX-0003.0062, 0065 (citing RX-0052 at 10:19-32, Fig. 9B)

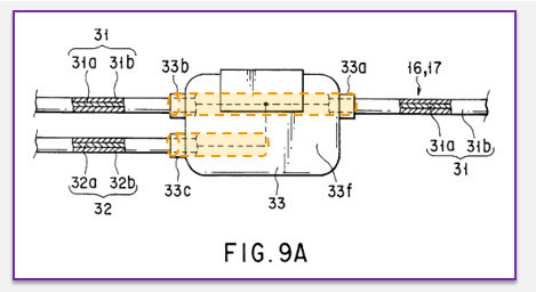

RDX-0003.0064 (citing RX-0052, Fig. 9A)

As shown in annotated Fig. 9A above, Yamawaki discloses "a first aperture extending completely through the undermold and having a first diameter, wherein the feeder cable extends through the first aperture along a first longitudinal axis" and "a second aperture extending partially through the undermold and having a second diameter different than the first diameter, wherein the drop line extends from the second aperture along a second longitudinal axis." Tr. (Kenny) at 1204:21-1205:17. To the extent Yamawaki does not expressly describe "having a second diameter different than the first diameter," a POSA would have understood that it could use branch cables with smaller diameter than the trunk cable because the trunk would carry more current than the branch. Tr. (Kenny) at 1205:12-17; *but see* Tr. (Weiner) at 1275:17-1276:10. Mr. Weiner argues that Yamawaki cannot disclose cables with different diameters because it teaches standardizing all the cables, but failed to point to any specific disclosure supporting this opinion. Tr. (Weiner) at 1275:17-1276:10.

Yamawaki explicitly describes trunk cable 31 described in Figs. 9A, 9B as a single cable that extends completely through the undermold. RX-0052, at 9:65-66 ("The apparatus 16 comprises ***one trunk cable 31*** and a plurality of branch cables 32."); *id*. at 10:17-19 ("A plurality

of branch junctions 33 are attached individually to longitudinally intermediate portions of ***the trunk cable 31***"); *id*. at 10:27-28 ("The trunk cable 31 is inserted in each of the trunk cable connecting portions 33a and 33b."); *id.* at 10:30-32 (stating that the trunk conductor 31a and the branch conductor 32 are connected electrically to each other in each branch junction 33); *id*. at 21:30-49 (claim 1 reciting ***a trunk cable*** and a plurality of branch cables diverging individually from a plurality of longitudinally intermediate portions of the trunk cable, branch junctions formed between ***the trunk cable*** and the branch cables); *see also* Tr. (Kenny) at 1232:9-1233:7, 1244:14-1245:8. This is contrary to Mr. Weiner's explanation that Fig. 9A of Yamawaki describes two separate trunk cables, and therefore Yamawaki does not teach apertures. Tr. (Weiner) at 1274:11-1275:16, 1279:11-21.

Mr. Weiner's argument presented during the evidentiary hearing that Yamawaki does not teach apertures because no one would thread a cable through the junctions 33 "on a residential rooftop" is also unsupported and a red herring. Tr. (Weiner) 1279:22-1280:20. First, nowhere in Yamawaki is there any description that the cables need to be threaded "on a residential rooftop" at the installation scene. To the contrary, one object of Yamawaki is to utilize connectors so that "laborious connecting operation such as soldering need not be carried out at the scene of installation of the photovoltaic generation system." RX-0052, at 5:23-28. Moreover, Yamawaki states that "rough wiring work for the apparatuses 16 and 17 can be carried out before the module units MN are set on a roof or the like." RX-0052, at 12:20-22. Therefore, it is unlikely that the trunk cable and branch cable are electrically connected and molded over by the molded body 33e and the cover member 33f *on* the rooftop.

Yamawaki describes branch cable 32 described in Figs. 9A, 9B as a single cable that extends partially through the undermold. RX-0052, Fig. 9A (depicting dotted line starting from

[redacted]

branch cable 32 only up to the middle of the junction); *id*. at 10:28-32 ("One end portion of the branch cable 32 is inserted in the branch cable connecting portion 33c. In each branch junction 33, the trunk conductor 31a and the branch conductor 32a are connected electrically to each other."); *see also* Tr. (Kenny) at 1245:9-20.

Yamawaki also confirms that the trunk cable 31 in Fig. 8A is a single cable, by describing the trunk cable 31 in a singular form, as opposed to the branch cables 32 in a plural form. RX-0052 at 11:3-7 ("As shown in FIG. 8A, connectors 34 are attached individually to at least one end, or preferably two opposite ends, of the trunk cable 31 and the respective distal ends of the branch cables 32 that diverge individually from the branch junctions 33."). Yamawaki's description of the two trunk cables 31 (annotated in blue, one connected to the negative terminal and the other connected to the positive terminal) in Fig. 6 below further supports that the trunk cable 31 in Figs. 9A, 9B is a single cable. Yamawaki describes that "in Fig. 6, ***two trunk cables 31 (indicated by thick lines in Fig. 6)*** are used in this generation system." RX-0052, at 8:58-60 (emphasis added). Mr. Weiner's theory that the trunk cable 31 in each of Figs. 9A, 9B was actually two separate cables, 1274:11-1275:16, is pure conjecture and unsupported by anything in Yamawaki's disclosures.

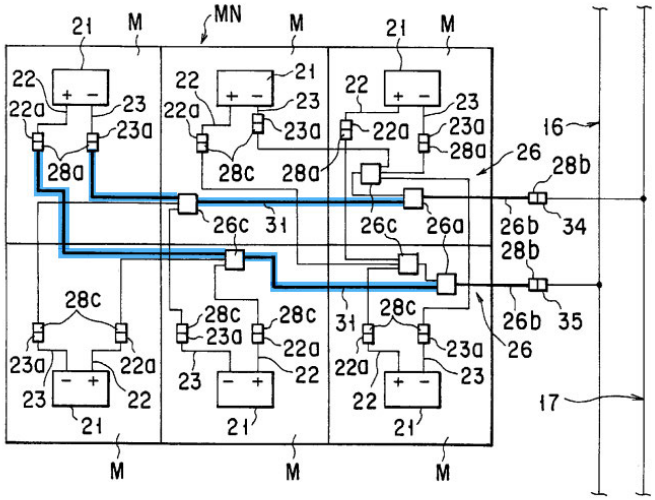

FIG. 6

RX-0052, Fig. 6

To the extent that Yamawaki does not expressly disclose "a second aperture extending partially through the undermold and having a second diameter different than the first diameter, wherein the drop line extends from the second aperture along a second longitudinal axis," the disclosures of Shao disclose this limitation, as shown in annotated Figure 1. Tr. (Kenny) at 1206:2-12. As explained above, a POSA would have been motivated to combine Yamawaki with Shao.

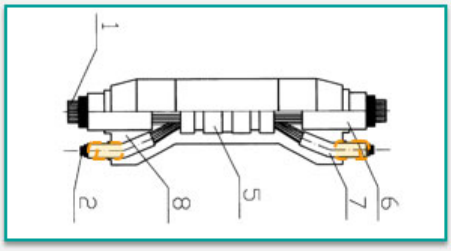

Detailed Description of Embodiments

A trunk conductor 1 and branch-line conductors 2 are formed by stranding TR-type copper single wires complying with the GB/T3953 standard. An elongated copper C-shaped clamp is used to form a K-shaped branch connector 5. One trunk conductor and two branch-line conductors are symmetrically overlapped and crimped by means of the K-shaped branch connector 5 to form one joint and two branch-line conductor out-leads, and directions of the branch-line conductor out-leads are opposite. Trunk insulation layer 3 and

RDX-0003C.0067 (citing RX-0097, at 6, Fig. 1)

To the extent that Yamawaki does not disclose a third aperture, Shao discloses "a third aperture extending partially through the undermold and having a third diameter different than the first diameter, wherein a second drop line extends from the third aperture along a third longitudinal axis," as described in annotated Figure 1. Tr. (Kenny) at 1206:13-22. As explained above, a POSA would have been motivated to combine Yamawaki with Shao.

v. Claim [1.d]

Yamawaki discloses claim element [1.d]. Tr. (Kenny) at 1205:18-24. As shown in annotated Fig. 9B above, Yamawaki discloses an overmold 33f surrounding the undermold 33e at an outer surface of the undermold 33e. Tr. (Kenny) at 1205:21-24, 1247:10-21; RX-0052, at 10:19-32.

f. Claim 12

As explained above, *Yamawaki-Shao* combination discloses claim 1. Yamawaki discloses "wherein said lead assembly combines power received from the plurality of solar panels and conducts that power directly to an inverter electrically connected to the feeder cable." Tr. (Kenny) at 1217:9-17.

For example, as illustrated in Figure 1, Yamawaki discloses "a photovoltaic generation system 12 attached to a building (e.g., house 11) and its loads 14" which are supplied with electric power from the system 12 via the inverter unit 13." RX-0052, at 7:46-53. Yamawaki further discloses a plurality of solar cell-panels 15 on a roof 11a. *Id*. at 7:54-66. One end of each of the wiring apparatuses 16 and 17 is connected to the solar cell panel, and the other end is connected to one end of its corresponding lead-in wire 18, which is connected to the inverter unit 13. *Id*. at 8:1-11.

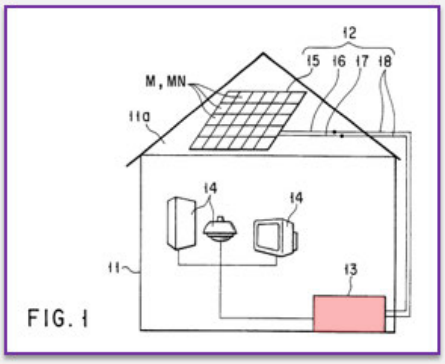

system **12** is installed outside the house **11**. An inverter unit **13** and the loads **14**, including electric appliances, etc., are arranged in the house **11**. These loads **14** are supplied with electric power from the system **12** via the inverter unit **13**.

RDX-0003.0087 (citing RX-0052, at 7:50-53)

g. Claim 13

As explained above, *Yamawaki-Shao* combination discloses claim 1. Yamawaki discloses claim 13. Tr. (Kenny) at 1217:18-1218:5. As discussed above with respect to claim element [1.a], *supra*, Yamawaki discloses "a drop line terminating at a drop line connector, the drop line connector configured to connect with a central trunk of a wire harness, the central trunk of the wire harness having a plurality of branches that each are configured to electrically connect to a separate solar panel contained in an array of a plurality solar panels." Yamawaki also discloses a second drop line and a second drop line connector, as shown in Figs. 3, 8A. RX-0052.

[redacted]

h. Claim 14

As explained above, *Yamawaki-Shao* combination discloses claim 1. *Yamawaki* discloses claim 14. Tr. (Kenny) at 1218:6-19. As discussed above with respect to claim 12, Yamawaki discloses "wherein said lead assembly combines power received from the plurality of solar panels and conducts that power directly to an inverter electrically connected to the feeder cable." Yamawaki further discloses combining electrical power received from the array of solar panels and the second array of solar panels at the nexus. *See e.g.*, RX-0052, Figs. 1, 3.

i. Claim 18

As explained above, *Yamawaki-Shao* combination discloses claim 1. *Shao* discloses claim 18. Tr. (Kenny) at 1218:20-1219:2. For example, Shao discloses that "[a]n elongated copper C-shaped clamp is used to form a K-shaped branch connector 5." RX-0097, at 6. "One trunk conductor and two branch-line conductors are symmetrically overlapped and crimped by means of the K-shaped branch connector 5 to form one joint and two branch-line conductor out-leads." *Id*. Thus, Shao discloses "wherein the electrical coupling between the feeder cable, the drop line and the second drop line at the nexus is secured with at least one of a compression lug, a solder connection, a splice, and a crimp." As explained above, a POSA would have been motivated to combine Yamawaki with Shao.

j. Claim 21

i. Claim [21.p]

Yamawaki discloses claim element [21.p]. Tr. (Kenny) at 1212:10-14. Yamawaki discloses a solar power system. *Id*.; RX-0052, at 1:7-12.

ii. Claim [21.a]

Yamawaki discloses claim element [21.a]. Tr. (Kenny) at 1212:15-21. As shown in

[redacted]

annotated Fig. 3, Yamawaki discloses a plurality of solar panels each electrically coupled to one of a plurality of branches of a wire harness (annotated in orange) to form a first solar array. *See* RX-0052, at 11:48-55, 10:17-19, 8:15-20, Fig. 3.

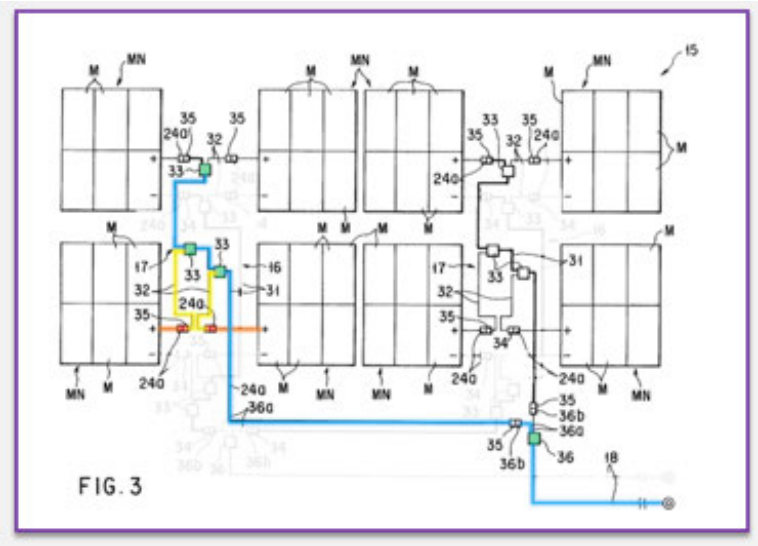

RDX-0003.0075–77 (citing RX-0052, Fig. 3)

iii. Claim [21.b]

Yamawaki-Shao combination discloses claim element [21.b]. Tr. (Kenny) at 1212:22-1213:1. As shown in Fig. 1, described above with respect to claim [1.p], Yamawaki discloses a lead assembly 16, 17, 18. *Id.*; RX-0052, at 1:7-12.

As shown in annotated Fig. 3 which shows a pair of drop lines (annotated in yellow), Yamawaki disclose "a drop line electrically connected to a central trunk of the wire harness and configured to receive power from the plurality of solar panels," and "a second drop line electrically connected to a central trunk of a second wire harness and configured to receive power from a plurality of solar panels in a second solar array." Tr. (Kenny) at 1213:2-18. Yamawaki further discloses a feeder cable (annotated in blue), the feeder cable electrically connected to a drop line at a nexus. Tr. (Kenny) at 1213:19-1214:2.

To the extent Yamawaki does not disclose "the feeder cable electrically connected to the

[redacted]

drop line and the second drop line at a nexus," which means at the same nexus, a POSA would have been motivated to consider Shao, which discloses two drop lines at a nexus. Tr. (Kenny) at 1215:4-9, 1246:7-1247:4. Shao discloses a trunk conductor 1 ("feeder cable") electrically connected to two branch-line conductors 2 ("the drop line and the second drop line") at a nexus. RX-0097, at 6, 8.

Yamawaki discloses "a primary mold that fully encases the nexus so as to substantially seal the nexus from external environmental conditions." Tr. (Kenny) at 1214:3-9; RX-0052 at 10:19-32, 13:15-18, Fig. 9B. The primary mold is equivalent to an undermold based on the ALJ's claim construction order, finding that "[t]o the extent there is more than one mold, … the 'primary mold' is the innermost of such molds." Order No. 16, at 36-37. As discussed above with respect to claim [1.c] reciting "a first aperture extending completely through the undermold" and "a second aperture extending partially through the undermold," Yamawaki discloses "a first aperture extending completely through the primary mold and having a first diameter, wherein the feeder cable extends through the first aperture," and "a second aperture extending partially through the primary mold and having a second diameter smaller than the first diameter, wherein the drop line extends into the second aperture." Tr. (Kenny) at 1214:10-1215:3; RX-0052, at Fig. 9A.

Shao also discloses "a primary mold that fully encases the nexus so as to substantially seal the nexus from external environmental conditions." Tr. (Kenny) at 1215:10-19. Shao discloses that "[a] K-shaped branch connector outer sheath 8 is made of an injection molding material of injection molding grade." RX-0097, at 6. As shown in annotated Fig. 1, Shao discloses "a first aperture extending completely through the primary mold and having a first diameter, wherein the feeder cable extends through the first aperture" and "a second aperture extending partially through the primary mold and having a second diameter smaller than the first diameter, wherein the drop line extends into the second aperture" and "a third aperture extending partially through the primary mold and having a third diameter smaller than the first diameter, wherein the second drop line extends into the third aperture." Tr. (Kenny) at 1215:20-1216:19. By describing the trunk cable as "one trunk conductor," Shao explicitly discloses that the first aperture extends completely through the primary mold. Tr. (Kenny) at 1248:9-17; RX-0097, at 6. By describing the branch cables each extending to the left and right as two separate branch-line conductors 2, Shao discloses that a second aperture and a third aperture extends partially through the primary mold. Tr. (Kenny) at 1216:6-19, 1248:7-17; RX-0097, at 6.

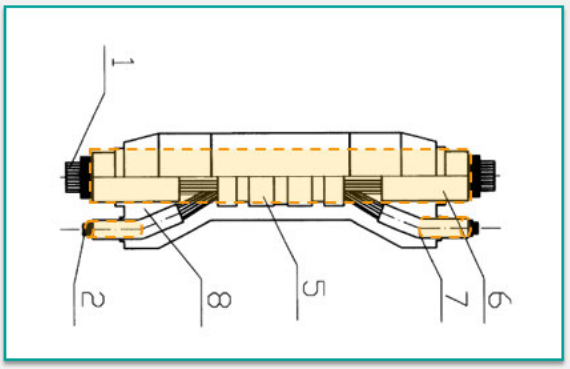

RDX-0003.0085 (citing RX-0097, Fig. 1)

k. Claim 23

For the reasons described above with respect to claim element [1.d], Yamawaki-Shao combination discloses claim 23. Tr. (Kenny) at 1219:3-9; RX-0052, at 10:19-24, Fig. 9B.

l. Claim 24

[redacted]

i. Claim [24.p]

For the reasons described above with respect to claim element [21.p], Yamawaki discloses claim element [24.p], a solar power system. *See* Tr. (Kenny) at 1216:20-1217:8.

ii. Claim [24.a]

For the reasons described above with respect to claim element [21.a], Yamawaki discloses claim element [24.a]. *See* Tr. (Kenny) at 1216:20-1217:8.

iii. Claim [24.b]

For the reasons described above with respect to claim elements [1.a]-[1.c] and [21.b], *Yamawaki-Shao* combination discloses claim element [24.b]. *See* Tr. (Kenny) at 1216:20-1217:8.

(2) Invalidity Under 35 U.S.C. § 112

The *Markman* Order in this Investigation (Order. No. 16) found, at that stage of the investigation, the evidence did not clearly and convincingly show that the "aperture" terms are indefinite. Order No. 16, at 41. However, as demonstrated during the evidentiary hearing, one of ordinary skill in the art would not have had reasonable certainty as to whether an aperture extends partially or completely through a molding, particularly where the mold forms apertures of more complex geometry than straight lines.

First looking to the intrinsic record, the specification reflects that there is little to support even a written description of the claimed apertures, apart from the figures. Tr. (Kenny) at 1190:16-1191:13. The only reference to an "aperture" in the specification of the '153 patent relates to an aperture for receiving zip-ties through an overmold, rather than for electrical wiring extending through an undermold or primary mold as claimed in the asserted patents. JX-0089, at 4:58-63; Tr. (Cameron) at 1063:17-1064:8, 1137:12-21; Tr. (Kenny) at 1188:17-1189:12; 1190:16-1191:13; Tr. (Weiner) at 1294:3-22. The other figures themselves also provide little insight, as

none are described as depicting an aperture extending partially or completely through, and any one of which may simply be an unclaimed embodiment. Tr. (Kenny) at 1191:5-13. Nothing else in the specification affords any greater understanding of the scope and limits of "aperture." Accordingly, the specification provides no substantive guidance as to the disputed question of how to determine whether an aperture extends completely or partially through a mold.

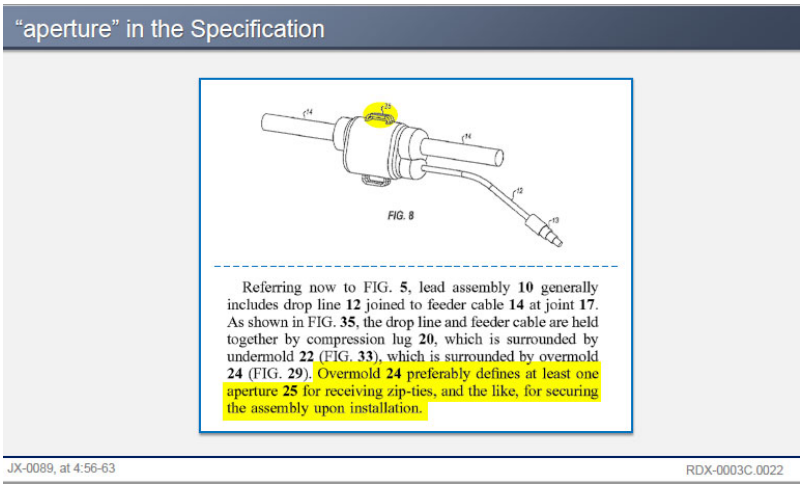

RDX-0003.0022 (citing JX-0089, at 4:56-63, Fig. 8.)

Why there is no textual support for interpretation of "partially extending through" is clear from the prosecution history of the '153 patent: this phrase and concept was introduced by the examiner during the prosecution of the '254 patent in a 113-word amendment that the applicant accepted without comment. JX-0085.0306-08; Tr. (Kenny) at 1189:13-1190:1; Tr. (Cameron) at 1057:20-1058:17, 1059:11-1060:4.

Nor did the sole inventor of 153 Patent, Dean Solon, at his deposition or the former Chief Technical Officer of Shoals, Jason Whitaker, who Mr. Solon identified as heavily involved in

[redacted]

prosecution of the Shoals' patents. JX-0221C (Dep. Tr (Whitaker) at 67:11-68:15); JX-0217C (Dep. Tr. (Solon) at 181:10-19).

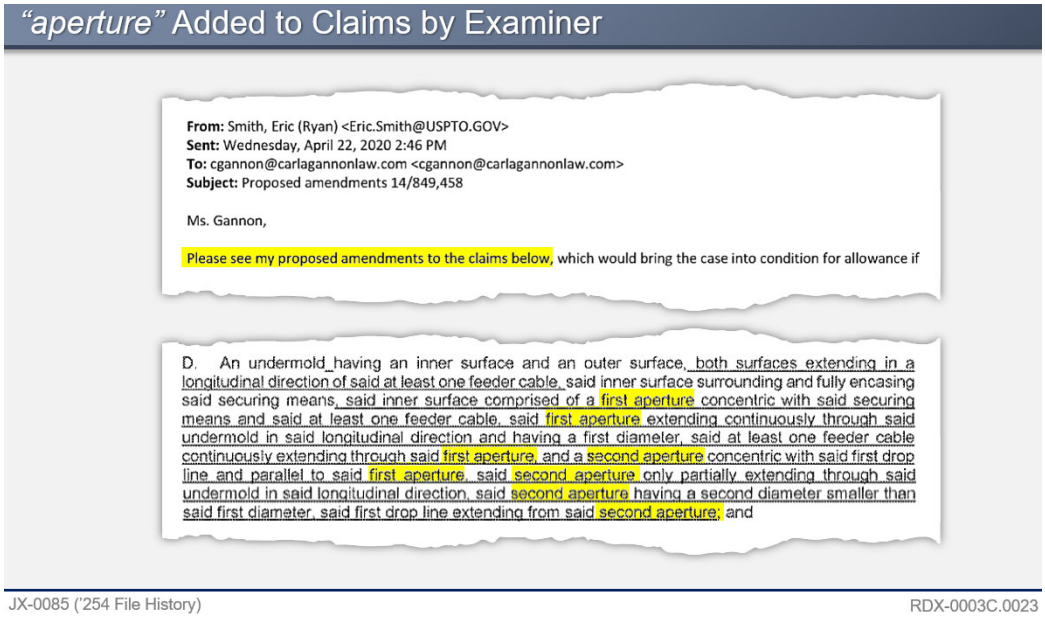

[redacted]

The disputes regarding the scope and meaning of the "aperture" claims *were* apparent during the course of the evidentiary hearing. *See e.g.*, Tr. (ALJ) at 462:9-14 ("I think it's completely an open issue where the drop line begins and ends, and whether the aperture corresponds to a single drop line or two drop lines. …"). Even considering extrinsic evidence, or

any particular meaning for aperture in the field of solar power installations, Shoals' own witnesses admitted that "aperture" (and "drop line") have no specific or special meaning within the solar power industry. Mr. Tolnar, president of Shoals Technologies admitted that he had never heard the term "aperture" used in the context of molding layers in a wire harness anywhere in the solar industry, and apart from the '153 patent family, knew of no use of "aperture" in relation to Shoals' BLA or BLA technology. Tr. (Tolnar) at 320:6-22. Shoals' expert, Mr. Brooks, with his 30 years in the solar industry did not recall ever hearing or seeing the term "aperture" used in the context of an EBOS solution. Tr. (Brooks) at 497:5-7; 497:15-18. And Mr. Brooks does not recall seeing "drop line" in Shoals' documentation or ever hearing of "drop line" as a term of art in the field of solar power technology. Tr. (Brooks) at 492:5-493:10, 494:25-495:17; *see also* Tr. (Cameron) at 1080:14-1081:6. *But see* Tr. (Macias) at 148:15-150:19 (Shoals' CRO stating that Shoals has used "drop lines" in the ordinary course of business of Shoals).

As a result, there is simply a void of guidance as to what aperture may mean, beyond it's plain and ordinary meaning. This is the fundamental problem with attempting to understand how to determine whether an aperture partially extends through a mold. Depending on how one interprets where the aperture terminates, one may arrive at a different conclusion as to whether an aperture partially extends or completely extends through a molding. Four of these tests to determine whether an aperture extends partially through were summarized by Dr. Kenny at the evidentiary hearing: (1) the See-Through test; (2) the Cable test; (3) the Start at the Nexus test; and (4) the Effective Physical Path test. *See* RDX-0003.0030.

As Dr. Kenny explained, the see-through test based in an optics understanding of "aperture" and is essentially a straight-line or visual test to determine whether the aperture ends, or continues all the way through the mold. Tr. (Kenny) at 1192:15-1193:12. The Cable test,

[redacted]

introduced and supported by Staff, defines the aperture by following the cable that forms the aperture, and which would constitute the entire pathway of that cable. Tr. (Kenny) 1193:14-1194:25; JX-0298 (Markman Hr'g Tr.) at 197:2-12, 197:20-198:10, 181:25-182:5.

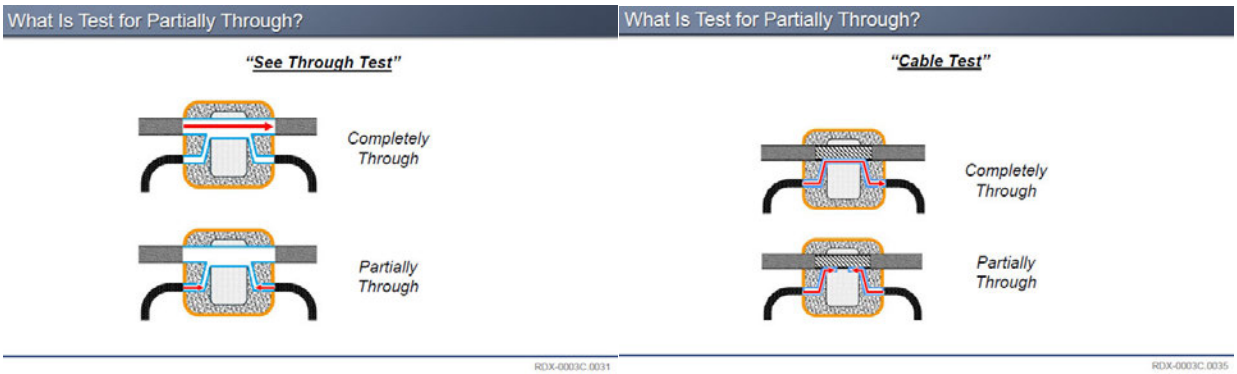

The "Start at the Nexus" test was a test introduced by Shoals during the Markman hearing, which defines the pathway of the aperture as starting with the nexus and then extends outwards. Tr. (Kenny) at 1195:1-12; *see also* Tr. (Brooks) at, 428:13-18, 432:19-433:2, 596:25-597:7; JX-0298, at 208:20-25. A second test introduced by Shoals during the Markman hearing was the Effective Physical Path test, which considers that when the cable associated with the drop enters a compression lug and it is crimped, the cable is crushed and distorted in a way that makes it essentially disappear, and there is no longer a physical pathway associated with the wire. Tr. (Kenny) at 1196:2-13; JX-0298, at 209:1-12, 209:20-210:3.

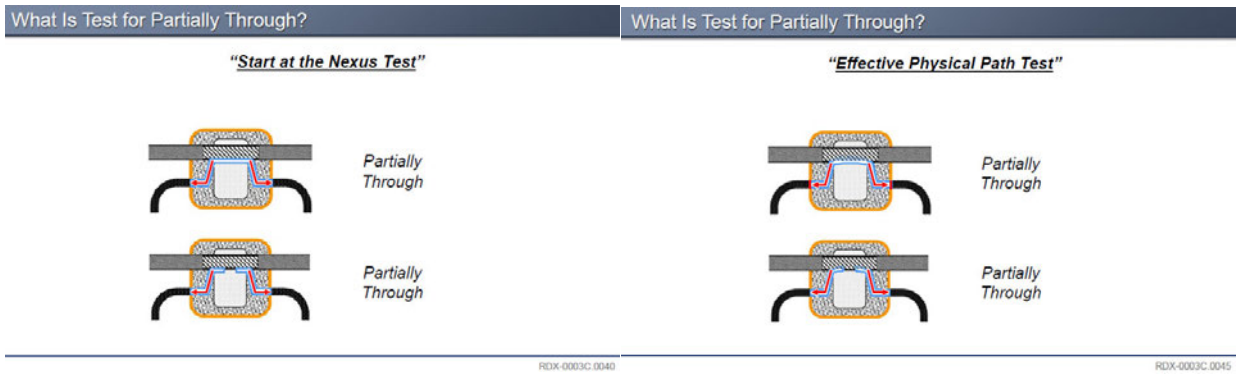

[redacted]

As to which test Shoals' expert Mr. Brooks applied, it is not clear. Mr. Brooks claimed that he applied the court's construction that requires the "entire pathway" of the drop line when viewed as if the drop line has been removed in his analysis. *See e.g.*, Tr. (Brooks) at 426:2-6, 478:16-22, 482:24-483:1, 483:11-19. But as explained by Dr. Cameron, and *supra* at Section III.A.2, Mr. Brooks did not. For example, he did not consider, as the Court's Markman Order requires, the entire pathway of the drop line. Mr. Brooks' test appears to align more closely with either the "Start at Nexus Test" or the "Effective Physical Pathway Test". Tr. (Brooks) at 428:13-18 ("[redacted]"); Tr. (Brooks) at 427:22-428:12 ("[redacted]"); 429:12-17 ("[redacted]"), 441:16-442:17 ("the aperture would have to end at the nexus, because once it gets to the nexus there is no longer an aperture for the drop line"), 547:13-25, 551:18-553:2 ("there is no aperture inside the nexus, because the wires are enclosed in a very cramped condition of this compression lug"); *see also* Tr. (Staff) at 459:4-14. But in either event, Mr. Brooks fails to consistently consider the entire pathway. Rather, Mr. Brooks applies either all of a pathway or part of a pathway, depending on whether it is a feeder cable or a drop line that extends from the aperture. Tr. (Brooks) at 426:7-23, 428:7-12, 429:6-17. This is more in line with Shoals' originally proposed construction, "all or part of… [give a bit more]," which the *Markman* order specifically rejected.[8]

In any event, as Dr. Kenny explained, for different structures, each of the four tests may provide different results. In the first demonstrative Dr. Kenny explained that for a cable starting

[8] As the Markman Order notes, "[i]f taken to be any subset of that pathway, any aperture could be found to 'only partially extend[]' through an undermold." *Id*. This appears to be exactly what Mr. Brooks has done in arbitrarily looking to the entire pathway for the feeder cable, but only part of the pathway for drop lines.

as a single wire placed into a compression lug along with the feeder cable, only the cable test would result in finding that the aperture is completely through. Tr (Kenny) at 1197:11-1198:5; *see* RDX-0003.0047. For a case where there is a second wire that goes straight through but is not pressed into contact with the feeder cable (but which is electrically connected via the nexus), both the See-Through and Cable tests would find the aperture goes completely through, while the Start at Nexus and Effective Physical Path Tests would find the aperture only goes partially through. Tr (Kenny) at 1197:11-1198:5; *see* RDX-0003.0048.

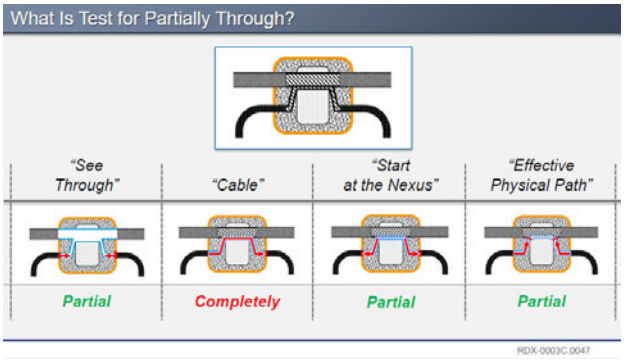

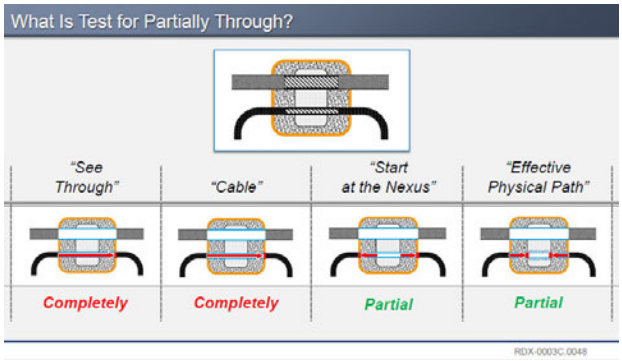

Where there are two separate wires and bring them together in the crimp, end-to-end, and then form the crimp, the aperture would find the aperture extends completely through, while the other tests would find the aperture only extends partially through. Tr (Kenny) at 1198:6-13; *see* RDX-0003.0049. Finally, Dr. Kenny explained that where there are two wires that are not physically in touch with each other end-to-end but just placed separately within the crimp, all four of these would lead to an aperture that would extend partially through under all of these four tests. Tr (Kenny) at 1198:14-18; *see* RDX-0003.0050.

[redacted]

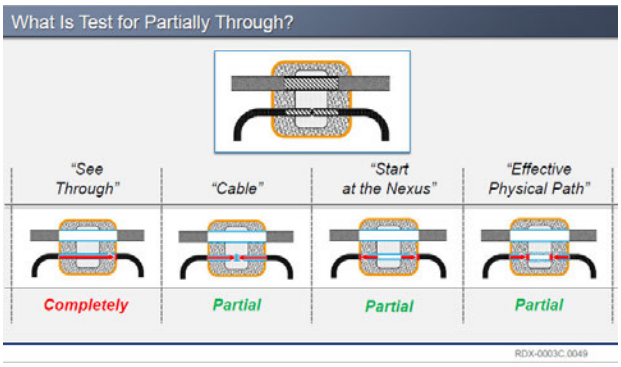

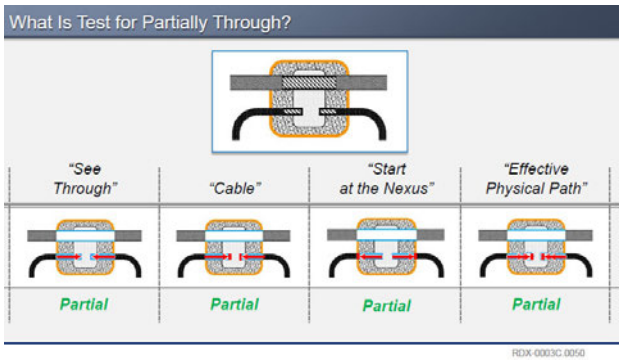

Notably, as Dr. Kenny observed, the two tests offered by Shoals—"Start at the Nexus" and "Effective Physical Path"—will always, by definition, result in finding that a drop line extends partially through, (*see* RDX-0003.0051), which would effectively render meaningless the 113-word amendment proposed by the examiner that was adopted in full by the applicant during prosecution of the '254 patent (from which the '153 patent is a continuation) to overcome prior art, and after which the '254 patent issued. Tr. (Kenny) at 1199:9-1200:3. That these tests always result in apertures that always extend partially through the mold by definition is affirmed by Shoals' own witnesses and by its counsel. Tr. (Brooks) at 429:6-17 (confirming that second and third aperture only partially extends through the undermold because the first drop line and the seecond drop line are two separate drop lines when they are put in this assembly even when they are comprised of a single cable); 498:22-499:9, 503:8-15; JX-0298 (Markman Tr. 209:20-210:3). Thus, while potentially reasonable interpretations of how "extending partially" may be determined, each of Shoals' tests are potentially problematic as inconsistent with limiting amendments during prosecution.

[redacted]

What Is Test for Partially Through?

NO REASONABLE CERTAINTY

	"See Through"	"Cable"	"Start at the Nexus"	"Effective Physical Path"
	Partial	Completely	Partial	Partial
	Completely	Completely	Partial	Partial
	Completely	Partial	Partial	Partial
	Partial	Partial	Partial	Partial

ALWAYS PARTIAL

RDX-0003C.0051

Each of these tests has been considered by the parties and Staff as an appropriate test to determine whether an aperture extends partially through a mold, and which may provide differing results depending on the mold structure considered. Dr. Cameron's view (a 3D hole that is the entire pathway for a cable in the undermold or primary mold viewed when the entire cable has been removed) is yet another test—alongside potentially many other reasonable tests to determine whether an aperture extends partially through a mold. Tr. (Cameron) at 1089:9-18; Tr. (Weiner) at. 1303:8-1305:1 (Mr. Weiner agreeing that Dr. Cameron's view is consistent with the Markman Order's construction of "aperture").

Dr. Kenny also depicted the divergence in where the aperture terminates based on the different test that may be applied. In analyzing Figure 35 of the '153 patent, and in envisioning the compression lug and undermold in figures 36, 37, 38, Dr. Kenny explained that, under the Cable test, the aperture would extend completely through the mold, as depicted using the yellow highlighted bar in demonstrative SDX-0003 (prepared during Staff's cross-examination of Dr. Kenny), below. Tr. (Kenny) 1237:12-1238:25. Dr. Kenny then explained how under Mr. Brooks' test (i.e., the Nexus test), the aperture would extend into the undermold as far as the blue highlighted line, and end a little way into the nexus. Tr. (Kenny) 1239:4-25. Dr. Kenny next

[redacted]

explained that the pink bar below depicts a scenario where one cable forms two inputs or branches (or "drop lines" as used in Dr. Cameron's deposition) and thus each "drop line" and associated aperture ending in the middle based on the electrical current going through. Tr. (Kenny) 1240:1-12. And finally, Dr. Kenny explained that if the exposed wire is considered part of the drop line, then the aperture would extend the length of the orange bar in the demonstrative SDX-0003, below. Tr. (Kenny) 1240:22-1241:23.

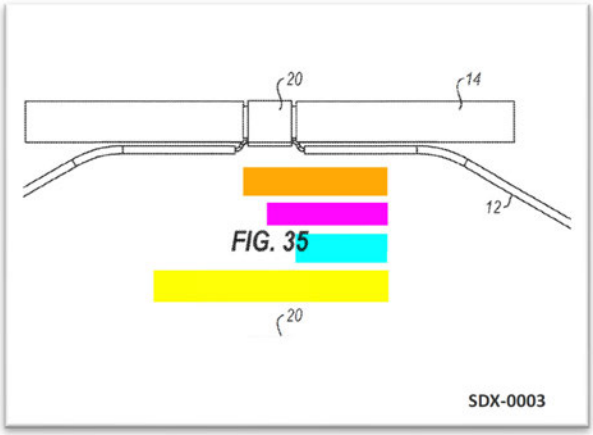

Yet another complexity that Dr. Kenny testified about was a scenario where two inputs or drop lines with overlapping pathways through the mold, creating only more reasonable uncertainty to one of ordinary skill in the art as to how to determine whether an aperture extends partially through a mold. Tr. (Kenny) 1241:25-1243:11.

Mr. Weiner did not even attempt to rebut Dr. Kenny's indefiniteness opinions nor opine on which of the several tests Dr. Kenny identified was how a POSA would understand the claimed invention and determine with reasonable certainty whether an aperture extended partially or completely through the mold. This is unsurprising because there is essentially no written description upon which he could rely upon. As a result, the totality of his testimony was the conclusory statement: "my opinion is that it's definite." Tr. (Weiner) 1315:4-1316:14. Mr. Weiner did not present in his rebuttal testimony any analysis of the intrinsic record to support Shoals'

[redacted]

interpretation of the claims, nor did counsel even attempt to elicit testimony from Mr. Weiner on the subject. Rather, as discussed *supra* Section III.A.2., when Voltage attempted to ask Mr. Weiner regarding Dr. Cameron's view of "aperture" presented earlier in the day, shown on RDX-0017 below, Mr. Weiner struggled to provide a coherent explanation why it was not correct.

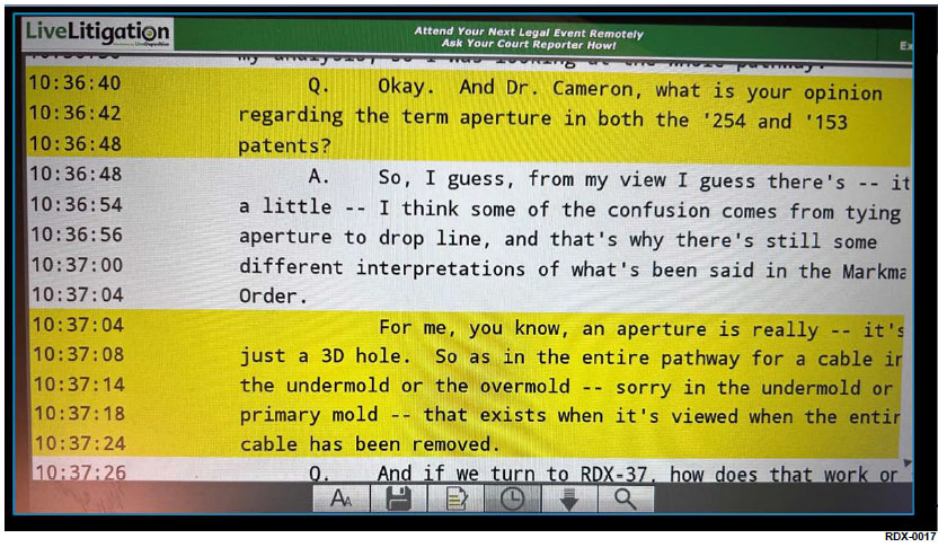

RDX-0017

And after Shoals unsuccessfully tried to shut down basic questions directed to Mr. Weiner's understanding of the term "aperture" that he applied in forming his opinions, Shoals claimed Voltage was out of time. Tr. (Shoals' Counsel) 1310:9-10; 1314:10-19. When Staff tried to ask Mr. Weiner similar questions, he again struggled to even understand and interpret the figures of the patent. Tr. (Weiner) 1316:22-24 (referring to SDX-0003) ("Well, I struggled with this, because there's no mold, so I can't see apertures, and so it's hard for me – it was hard for me to follow this, to be honest.").

With no written description or guidance—intrinsic or extrinsic to the '153 patent—to know which of a myriad of possible tests correctly determines whether an aperture extends partially through a mold, one of ordinary skill in the art is left with no reasonable certainty as to the scope of the '153 patent claims. Mr. Weiner provides no reasoned rebuttal opinion that the claims are in fact definite, and accordingly, the asserted '153 patent claims, all of which recite "partially through

the undermold/primary mold," should be found invalid for lack of written description or for indefiniteness under 35 U.S.C. § 112.

VI. ECONOMIC DOMESTIC INDUSTRY

A. Legal Standard

"When a section 337 investigation is based on allegations of patent infringement, the complainant must show that 'an industry in the United States, relating to the articles protected by the patent . . . exists or is in the process of being established.'" *Certain Replacement Automotive Lamps II*, Inv. No. 337-TA-1292, Comm'n Op. at 12, EDIS Doc. ID 816583 (Mar. 22, 2024) (quoting 19 U.S.C. § 1337(a)(2)) ("*Automotive Lamps*"). "[A]n industry is considered to exist if there is in the United States, with respect to the articles protected by the patent . . . concerned –

(A) significant investment in plant and equipment;

(B) significant employment of labor or capital; or

(C) substantial investment in its exploitation, including engineering, research and development or licensing."

Id. § 1337(a)(3).

Under Commission precedent, the domestic industry ("DI") requirement of section 337 consists of a "technical prong" and an "economic prong." *See, e.g.*, *Alloc, Inc. v. Int'l Trade Comm'n*, 342 F.3d 1361, 1375 (Fed. Cir. 2003). The complainant has the burden of proving "by a preponderance of evidence" that the DI requirement is satisfied. *Certain Elec. Candle Prods. and Components Thereof*, Inv. No. 337-TA-1195, Comm'n Op. at 11, EDIS Doc. ID 781605 (Oct. 4, 2022) ("*Elec. Candle*"). While analysis of the economic prong is not analyzed according to a rigid mathematical formula, *Certain Male Prophylactic Devices*, Inv. No. 337-TA-546, Comm'n Op. at 39, EDIS Doc. ID 279161 (Aug. 1, 2007), the complainant must rely on evidence that is concrete and sufficiently reliable. *See Certain Nor and Nand Flash Memory Devices and Prods.*

Containing the Same, Inv. No. 337-TA-560, ID, 2008 WL 2622574, at *28 (June 1, 2007) (holding complainant failed to meet its burden of proving the economic prong of DI because its evidence was "unreliable and unpersuasive" as it was not based on "concrete figures"), *unreviewed by Comm'n*, *id.*, at *1.; *Certain Access Control Sys. & Components Thereof*, Inv. No. 337-TA-1016, ID at 257-59, EDIS Doc. ID 629565 (Nov. 17, 2021) (stating that the record "must consist of sufficient reliable and credible evidence" to find that the complainant established the economic prong of DI and holding that the complainant failed to establish quantitative significance under subsection (A) for lack of "credible evidence").

Though the statute does not define "significant," the Commission has concluded that Congress intended a complainant's investments under subsection (A) or subsection (B) must be "significant in relation to the articles protected by the intellectual property right concerned." *Certain Printing and Imaging Devices and Components Thereof*, Inv. No. 337-TA-690, Comm'n Op. at 26, EDIS Doc. ID 444708 (Feb. 17, 2011) ("*Printing and Imaging*"). A complainant must "provide context of the company's operations, the marketplace, or the industry in question necessary to understand whether the value of its domestic activities is significant or substantial." *Certain Carburetors and Prods Containing Such Carburetors*, Inv. No. 337-TA-1123, Comm'n Op. at 19, EDIS Doc. ID 692517 (Oct. 28, 2019) ("*Carburetors*"). The Federal Circuit requires a DI to be characterized "quantitatively, *i.e.*, by the amount of money invested in the plant and equipment." *Lelo Inc. v. Int'l Trade Comm'n*, 786, 879, 833 (Fed. Cir. 2015). Qualitative factors alone are insufficient because the "plain text of § 337 requires a quantitative analysis." *Id.*at 882, 885.

B. Argument

Shoals failed to meet its burden to prove the existence of a DI under either subsection (A) and subsection (B) of 19 U.S.C. § 1337. At the hearing, Shoals alleged the following DI

[redacted]

investments:

Subsection (A): [redacted]:

Pre-2019	2019	2020	2021	2022	**Total**
[redacted]					

Subsection (B): [redacted]l:

2019	2020	2021	2022	**Total**
[redacted]				

Tr. (Nelson) at 829:20-830:1, 837:1-7; JX-0134C; JX-0133C; Shoals' Pre-hearing Brief at 210, 218.

Shoals failed to meet its burden for several reasons. First, as referenced in the representative products section, Shoals failed to prove that some of its alleged DI products practice the '153 patent, rendering Shoals' investments overstated because they include non-DI Products. Further, because Shoals presented its investments in the aggregate, it is impossible to exclude investments for non-DI Products. Second, Shoals did not present any evidence of investments in 2023, even though the complaint was filed in May 2023. Third, Shoals' investments in plant and equipment were overstated and insufficiently supported. Fourth, Shoals' investments in labor and capital were overstated and lack support in the evidentiary record. And fifth, Shoals' significance calculations were flawed. Thus, as explained in greater detail below, the ALJ should find that Shoals did not meet the economic DI requirement.

(1) Shoals' claimed investments are directed to non-DI products.

"Both Federal Circuit law and Commission precedent require the existence of actual 'articles protected by the patent' in order to find that a domestic industry exists." *Certain Subsea Telecomm. Sys. and Components Thereof*, Inv. No. 337-TA-1098, Comm'n Op. at 39, EDIS Doc.

ID 691978 (Oct. 21, 2019) ("*Subsea Telecomm.*") (quoting 19 U.S.C. § 1337(a)(2)). Expenditures may be counted toward satisfaction of the DI requirement "so long as those investments pertain to the complainant's industry with respect to the articles protected by the asserted IP rights." *Certain Television Sets, Television Receivers, Television Tuners and Components Thereof*, Inv. No. 337-TA-910, Comm'n Op. at 68, EDIS Doc. ID 568157 (Oct. 30, 2015). In establishing economic DI, a complainant is not permitted to include investments in products that do not practice the patent. *See Subsea Telecomm.*, Inv. No. 337-TA-1098, ID at 75, EDIS Doc. ID 675837 (Apr. 26, 2019), *aff'd*, Comm'n Op. at 39, EDIS Doc. ID 691678 (Oct. 21, 2019).

In *Subsea Telecomm.*, for example, the complainant included investments in NuWave Optima systems with AC400 modules, which practiced the patent at issue, and systems with AC100 modules, which did not practice the patent at issue, for the purposes of establishing a DI. *Id.* at 68. The ALJ noted that "[s]uch an approach is not permitted by the plain language of the statute, which requires that the investments in plant and equipment or labor or capital relied upon to establish a domestic industry must be investments 'with respect to the articles protected by the patent . . . .'" *Id.* at 70 (quoting 19 U.S.C. § 1337(a)(3)). The ALJ ultimately concluded that the complainant's "reliance on 100% of its investments in NuWave Optima systems [was] inconsistent with section 337's requirement that a domestic industry exist[ed] with respect to 'articles protected by the patent.'" *Id.* at 75 (quoting 19 U.S.C. § 1337(a)(2)); *see also Certain Computer Forensic Devices and Products Containing the Same*, Inv. No. 337-TA-799, ID at 11, EDIS Doc. ID 497867 (Oct. 26, 2012) (finding that complainant's investments in plant and equipment were "necessarily improper because they include[d] expenses of non-domestic industry products"), *unreviewed*, Notice, EDIS Doc. ID 499846 (Dec. 21, 2012); *Certain Dimmable Compact Fluorescent Lamps and Prods. Containing Same*, Inv. No. 337-TA-830, ID at 63, EDIS Doc. ID 507084 (Feb. 27,

[redacted]

2013) (concluding that complainant "improperly included expenses of non-domestic industry products in its investments allocated under prongs A and B") ("*Dimmable*");[9] *Automotive Lamps*, Inv. No. 337-TA-1292, Comm'n Op. at 29, 31 (holding complainant failed to satisfy the economic prong because it "erred by relying on combined investments across multiple patents when each domestic industry product [was] protected by only one Asserted Patent" and emphasizing that a DI must exist "specifically for the articles protected by the patent at issue").

As explained in the representative products section, Shoals failed to prove that some of its alleged DI Products practice the '153 Patent. Mr. Dominic Bardos, Shoals' chief financial officer and corporate designee on economic DI, testified that when Shoals collected the financial data for the investigation, he was not "[redacted]"[10] JX-0205C (Bardos Dep. at 26:19-21). Shoals' economic expert, Mr. Clarke Nelson, relied on Mr. Brooks's opinions for technical DI, Tr. (Nelson) at 848:21-24, and "[redacted]," Tr. (Nelson) at 876:21-22. Mr. Bardos then testified at the hearing that Shoals' data included investments for every variation of the BLA, which includes one-drop BLAs and BLAs with odd-numbers of drop lines. Tr. (Nelson) at 755:2-9. Accordingly, as Respondents economic expert, Mr. Andrew Clarke, testified, Shoals' "[redacted]." Tr. (Clarke) at 995:20-21. For example, Shoals did not present any evidence at the hearing that the EV-BLA practices the '153 Patent. However, Mr. Bardos admitted that Shoals' data includes expenses associated with the EV-BLA, Tr. (Bardos) at 755:13-16, *accord* Tr.

[9] The parties in this investigation petitioned for review of the ID, which the Commission granted. However, the parties then settled shortly thereafter, so the investigation terminated. *See Dimmable*, Inv. No. 337-TA-830, Comm'n Op., at 2-3, EDIS Doc. ID 532721 (Apr. 25, 2014).
[10] The context of this testimony and Mr. Bardos's role as corporate designee on economic DI indicate that he was referring to Shoals' own practice of the asserted patents, not infringement by respondents.

(Clarke) at 996:7-16. Thus, like the complainant in *Subsea Telecomm.*, Shoals failed to meet its burden on economic DI, because it includes investments in non-DI Products.

In that same vein, Shoals presented its BLA investments in the aggregate, so it is impossible to determine how much of Shoals' investments should be excluded for the non-DI products. Mr. Bardos testified that the evidence Shoals produced in this investigation Tr. (Bardos) at 877:19-878:19; *see also* JX-0205C (Bardos Dep. Tr. at 96:17-97:4). But, he also admitted, both at the hearing and at his deposition, that . *See* Tr. (Bardos) at 757:6-762:10; JX-0205C (Bardos Dep. Tr. at 93:3-94:2). Likewise, Shoals' President, Mr. Jeffrey Tolnar, testified that Shoals maintains Tr. (Tolnar) at 340:3-341:4.[11] As Mr. Clarke stated, there is no information "". Tr. (Clarke) at 997:20-25. The information exists; Shoals elected not to produce it.

[11] Mr. Tolnar testified to this fact under oath and Shoals elected not to redirect him on it. Instead, over Voltage's objection, Shoals elicited contradictory testimony from Mr. Bardos. Tr. (Bardos) at 667:12-670:1. Mr. Bardos's testimony should be given no weight. *See United States v. Rodriquez*, No. 10-20613-CR, 2011 666136, at *2 (S.D. Fla. Feb. 13, 2011) (noting the statement of one witness cannot be used to impeach another witness); *United States v. Sampson*, No. 21-CR-20732, 2023 WL 8772873, at *6 (E.D. Mich. Dec. 19, 2023) (granting the government's motion *in limine* to "prohibit the use of one's witnesses statement to impeach another testifying witness").

Because Shoals' investments are directed in part to "articles that [do not] practice the patent," as required by section 337, and because Shoals has presented its BLA investments in the aggregate, the ALJ should find that Shoals has not established an economic DI.

(2) Shoals failed to establish a DI at the time of the complaint.

The complainant must establish that a DI exists, or is the process of being established, as of the date the complaint was filed. *See Motiva, LLC v. Int'l Trade Comm'n*, 716 F.3d 596, 601 n.6 (Fed. Cir. 2013) (affirming the Commission's use of the filing date of the complaint as the relevant date to determine whether complainant proved that an industry existed).

Shoals failed to establish that a DI exists when the complaint was filed in May 2023. Tr. (Clarke) at 995:6-8. The investments Mr. Nelson used for his calculations primarily correspond to the 2019-2022 timeframe, though he included some and the . Tr. (Clarke) at 999:14-17; JX-0270C (Nelson Report, Schedule 7). But Shoals has not produced any quantification of investments in 2023. Tr. (Clarke) at 999:19-21. Mr. Bardos claimed that . Tr. (Clarke) at 696:21-23. But Mr. Tolnar and Mr. Bardos signed Shoals' 10-Q for the quarter ending on March 31, 2023, on May 8, 2023. JX-0112.0076. While the financial information in the 10-Q is unaudited, Shoals could have produced financial data for the quarter ending March 31 with the Amended Complaint or any time before the close of fact discovery in December 2023. Mr. Clarke, who has been involved in over forty 337 investigations[12], testified that in his experience, if the complainant does not have information available through the filing of the complaint, it will "then produce additional data during the discovery process to . . . prove that, yes,

[12] In contrast, Mr. Nelson had never been accepted as an expert in the ITC before this investigation, had issued only one prior report in a 337 investigation, and had supported a testifying expert in only 204 337 investigations. Tr. (Nelson) at 847:12-20.

[redacted]

[it] had investments through the filing of the complaint." Tr. (Clarke) at 992:5-8, 1000:25-12. The absence of record evidence relating to investments at the time of the complaint is significant, as this is the most relevant time for DI investments and because Shoals claims [redacted] without evidence that those investments relate to products that practice the patent.

Shoals' failure to establish DI at the time it filed the Complaint provides another reason why the ALJ should find that Shoals has not met its burden in proving economic DI.

(3) Shoals failed to satisfy the DI requirement under subsection (A).

The type, or quality, of investment is critical to the economic DI analysis. *See Elec. Candle*, Inv. No. 337-TA-1195, Comm'n Op. at 11-12. "In this regard, the Commission considers the nature and significance of a complainant's activities with respect to the protected articles." *Id.* at 12. The Commission may consider "whether complainant's undertakings had a direct bearing on the practice of the patent." *Printing and Imaging*, Inv. No. 337-TA-690, Comm'n Op. at 30; *see also Certain Concealed Cabinet Hinges and Mounting Plates*, Inv. No. 337-TA-289, Comm'n Op, 1990 ITC LEXIS 3 at *34 (Jan. 8, 1990) (reducing weight of activity Commission "otherwise would accord complainant's investment in plant and equipment" because of the activity's "indirect bearing on the patented features" of the product) (*"Concealed Cabinet Hinges*"). In other words, "there may be some investments that are too far removed from the articles protected by the asserted intellectual property rights to be considered part of the complainant's domestic industry." *See Elec. Candle*, Inv. No. 337-TA-1195. Comm'n Op. at 10, 39-40 (concluding complainant failed to satisfy subsection (A) in part because complainant's domestic activities, including research and development into colors, fragrances, and styles, and testing, and customer service activities, did not concern exploitation of the patent for electronic candle products).

There are three significant flaws with Shoals' subsection (A) DI claim: (1) Shoals failed to separately quantify [redacted] activities; (2) Shoals ignored the element of

[redacted]

time for the [redacted]; and (3) Shoals included [redacted] as an investment without evidentiary support. To claim a DI under subsection (A), Shoals has to r[redacted]. JX-277C (Nelson Report, Schedule 14); JX-0270C (Nelson Report, Schedule 7). In fact, [redacted] subsection (A) investments. Tr. (Nelson) at 829:22-830:1; JX-0270C (Nelson Report, Schedule 7); JX-0133C at Sheet 'Fixed Asset List').[13] And, the remaining two-thirds are overstated, because they rely on an allocation factor that credits a substantial amount of [redacted].

a. Shoals' subsection (A) investments rely significantly on [redacted].

[redacted] are generally viewed by the Commission as unrelated to the "intellectual property right concerned." *See Certain Artificial Eyelash Extension Sys., Prods., and Components Thereof*, Inv. No. 337-TA-1226, Comm'n Op. at 51-52, EDIS Doc. ID 782895 (Oct. 24, 2022) (excluding post-manufacturing warehousing and distribution costs) ("*Artificial Eyelashes*"); *Certain Bone Cements, Components Thereof, and Prods. Containing the Same*, Inv. No. 337-TA-1153, Comm'n Op. at 22, EDIS Doc. ID 731649 (Jan. 25, 2021) (noting that the Commission considered certain activities, such as "warehousing costs associated with importation of the [DI] products as well as sales and marketing of the product, to be indistinguishable from those of a mere importer and not typically credited them when determining whether a [DI] exists") ("*Bone Cements*").

Shoals claims that BLA production occurs at [redacted]. Tr. (Bardos) at 648:23-649:2. Mr. Bardos stated that [redacted], and [redacted]

[13] [redacted].

Tr. (Bardos) at 648:23-649:2. . Mr. Bardos testified that Shoals allocated for the BLA, but only is used for BLA production while ." Tr. (Bardos) at 649:23-650:3; JX-0195C (Nelson Report, Updated Schedule 6). He testified that Shoals allocated approximately , but only with the remainder used for . Tr. (Bardos) at 650:4-6; JX-0195C (Nelson Report, Updated Schedule 6). It is unclear how reliable those allocations are as JX-0205C (Bardos Dep. at 121:7-20). The following demonstrative shows some of the significant space at :

[redacted]

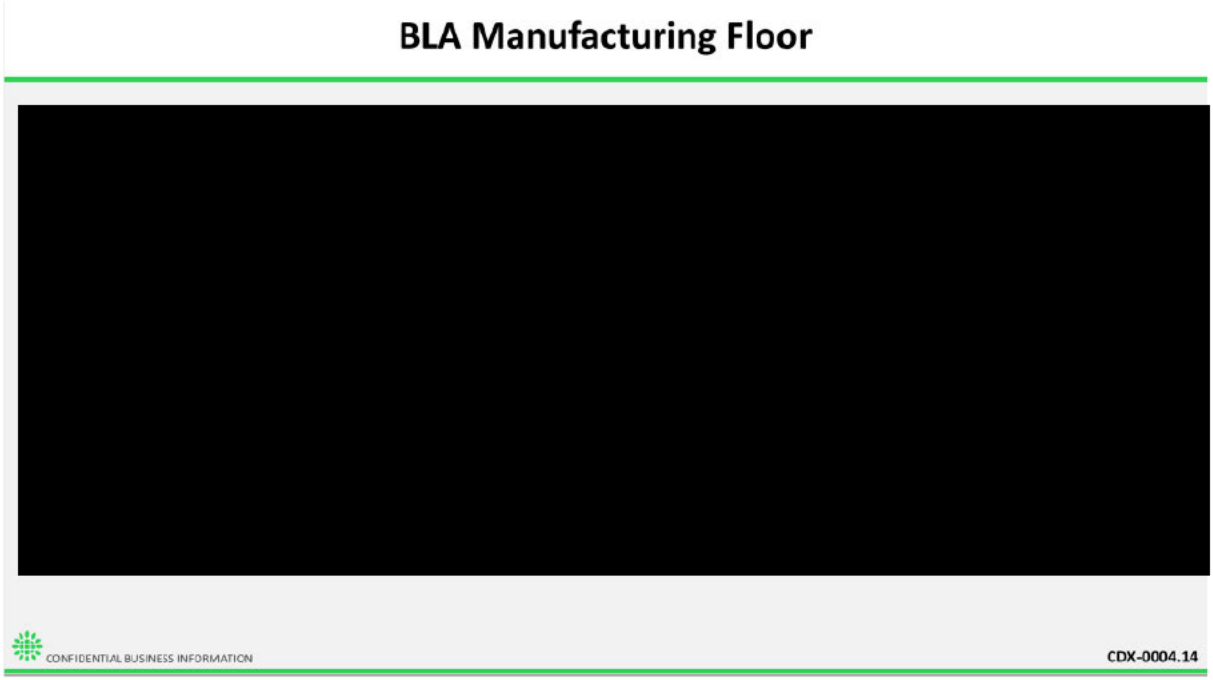

The Commission gives warehousing and distribution activities less weight as they are unrelated to the "intellectual property right concerned." *See Artificial Lashes*, Inv. No. 337-TA-1226, Comm'n Op. at 51-52. As such, Shoals should have quantified its investments based on true [redacted] separately from its investments based on mere [redacted]. Shoals instead aggregated its much larger space used [redacted], thereby skewing and artificially inflating its subsection (A) investments. Tr. (Bardos) at 1001:11-13. Mr. Clarke's demonstrative illustrates how little [redacted]:

JX-0269C (Nelson Report, Schedule 6); RX-0482C (Bardos Decl. at ¶ 15) RDX-0015C.0013

RDX-0015C.0013 (JX-0269C (Nelson Report, Schedule 6)).

Mr. Nelson purported to quantify the following plant expenses under subsection (A): . Tr. (Nelson) at 825:11-828:7. For his calculations of Mr. Nelson used the (*i.e.*, he included) in the allocation ratio. *See* Tr. (Nelson) at 823:7-825:23. For the , Mr. Nelson Tr. (Nelson) at 825:15-23; JX-0271C (Nelson Report, Schedule 8; JX-0276C (Nelson Report, Schedule 13); JX-0134C at Sheet '.' And for the , which were shared with .[14] Tr.

[14] Shoals did not dedicate any , so Mr. Nelson's ratio was the following: Tr. (Nelson) at 826:5-12.

[redacted]

(Nelson) at 826:5-12; JX-0271C (Nelson Report, Schedule 8; JX-0276C (Nelson Report, Schedule 13); JX-0134C at Sheet '[redacted].'

Mr. Nelson's use of [redacted] in each of these allocations resulted in a significant overstatement. Tr. (Nelson) at 1003:1-9. And, as Mr. Clarke testified, this same flaw is present with the [redacted], because Mr. Nelson's [redacted], which do not have a direct bearing on the BLA. Tr. (Nelson) at 822:18-823:15; Tr. (Clarke) 1003:10-18.

b. Shoals overstated its investment in the purchase of Plant 1.

The second significant flaw in Shoals' subsection (A) investments is that Mr. Nelson used the [redacted], *see* JX-0270C (Nelson Report, Updated Schedule 7); JX-0091C at Sheet '[redacted]' to calculate an allocation for BLA production, even though [redacted]. Tr. (Nelson) at 828:14-24. BLA production began [redacted], *see* JX-0277C (Nelson Report, Schedule 14), but Mr. Nelson testified that "[redacted]. Tr. (Nelson) at 840:11-13; JX-0276C (Nelson Report, Schedule 13); JX-0134C at Sheet '[redacted].' Mr. Nelson applied the [redacted]. Tr. (Clarke) at 1003:22-1004:4. But between [redacted], Tr. (Clarke) at 1004:9-13, so "[redacted]" Tr. (Clarke) at 1004:11-13. Shoals thereby overstated its subsection (A) investments, rendering them unreliable; Shoals cannot show the existence of a DI based on investments in [redacted]. *See Certain Polycrystalline Diamond Compacts and Articles Containing the Same*, Inv. No. 337-TA-1236, ID at 148-49, EDIS Doc. ID 765647 (Mar. 3, 2022) (discussing how the complainant

did not properly "amortize[] or depreciate[] the purchase prices of the claimed equipment, so equating investment with unadjusted purchase price [was] not a reliable methodology" and concluding that the complainant "failed to offer a sufficiently reliable measure of [its investments] under subsection (A)").

c. Shoals' expenditure for lacks evidentiary support.

Shoals' second largest expenditure under its subsection (A) investments is . JX-0271C (Nelson Report, Schedule 8); JX-0134C at Sheet '.' Of the Shoals allocated to subsection (A) investments, . JX-0134C at Sheet '.'[15] But there is inadequate support in the record to justify these investments. At his deposition, Mr. Bardos was "n," noting that the category included . JX-0205C (Bardos Dep. Tr. at 332:10-333:2). But Shoals failed to provide evidence of how . At the hearing, Mr. Bardos described the category as a "." Tr. (Bardos) at 708:4-5. He continued, stating that " Tr. (Bardos) at 708:8-11 (emphasis added). However, do not have a direct bearing on the manufacture of the DI product, and they are not necessary "to use or exploit" the BLA.

In sum, a substantial portion of Mr. Nelson's total are based on flawed underlying assumptions. Not only did Mr. Nelson include significant in his allocation ratios used to calculate

[15]

[redacted]

[redacted], and the evidence does not support the inclusion of investments in "[redacted]" in the DI. Accordingly, Shoals' [redacted] under Subsection (A) are overstated and insufficiently supported.

(4) Shoals failed to satisfy the DI requirement under subsection (B).

Shoals' claimed [redacted] are overstated and lack support in the record. Mr. Nelson includes seven categories of labor investments: [redacted]. Tr. (Nelson) at 830:6-833:5; JX-0272C (Nelson Report, Schedule 9); JX-0133C at Sheets '[redacted]' and '[redacted].' Three major flaws render these investments overstated and lacking in support: (1) the data underlying the [redacted] is unreliable and inconsistent; (2) Mr. Nelson failed to separately quantify expenses related to [redacted]; and (3) the [redacted] is overstated. Tr. (Nelson) at 762:12-763:12; Tr. (Clarke) 1006:2-6; Tr. (Clarke) at 1010:1-11.

a. Shoals' underlying [redacted] is unreliable, inconsistent, and insignificant.

Shoals' [redacted] depend on two layers of time estimations. *See* Tr. at 732:11-733:18. These estimations lack any evidentiary value, but even if the ALJ credits them, they result in miniscule investments as of the filing of the complaint.

In the first layer, Mr. Bardos claimed that "[redacted]. Tr. (Bardos) at 732:22-733:1. In fact, Shoals estimated the amount of time that each of these employees spent on [redacted] without reference to any documents, and Mr. Bardos could not explain how these estimates

were determined. Tr. (Bardos) at 764:8-767:2; JX-0205C (Bardos Dep. Tr. at 345:12-347:17). The estimates are not only uncorroborated, but they are also inconsistent with record evidence. For example, Shoals allocated even though he testified during his deposition that JX-0217C (Solon Dep. Tr. at 118:6-8); Tr. (Clarke) at 1006:7-17.

Mr. Clarke testified to another inconsistency in this first layer, as well. The in JX-133C contain an " " column, indicating whether the individual contibuted to . Tr. (Clarke) at 1007:2-5. Mr. Clarke highlighted two individuals in yellow, " and one individual in green, Tr. (Clarke) at 1007:6-12; RDX-0015C.0022 (JX-0133C at Sheet ' (excerpted)).

RDX-0015C.0022

JX-0197C (Nelson Report, Updated Schedule 11) (excerpted) RDX-0015C.0023

Mr. Clarke then demonstrated that Tr. (Clarke) at 1007:21-1008:6; RDX-0015C.0023 (JX-0197C (Nelson Report, Updated Schedule 11)).

After purportedly allocating , Shoals performed a second layer of . JX-0133C at Sheet '; JX-0272 (Nelson Report, Schedule 9). This second allocation introduced yet another inconsistency. Shoals . *See* JX-0133C at Sheet 'EN_RD Wages Expense by Year'; JX-0272 (Nelson Report, Schedule 9); Tr. (Clarke) at 1008:25-1009:5. Shoals presented no evidence to support on, rendering it useless for purposes of assessing DI. Tr. (Clarke) at 1008:24-1009:5; *see Certain Power Semiconductors, and Mobile Devices and Computers Containing Same*, Inv. No. 337-TA-1308, ID at 122, EDIS Doc. ID 798314 (May 18, 2023), *aff'd* 88 Fed. Reg. 47188 (July 21, 2022) (Bhattacharyya, ALJ) (finding no DI in part because it was "unreasonable to apply a consistent [redacted] allocation" for each DI product for every year after launch).

Shoals' is also entitled to no weight because it includes unexplained . *See* Tr. (Clarke) at 1008:10-15; JX-197C (Nelson Report, Updated

JX-0197C (Nelson Report, Updated Schedule 11) (excerpted) RDX-0015C.0024

Schedule 11). For example, . Tr. (Clarke) at 1008:16-18. Several other . *See* JX-197C (Nelson Report, Updated Schedule 11). Shoals did not explain these significant increases and there is no way of knowing " " Tr. (Clarke) at 1008:19-21.

RDX-0015C.0024 (JX-0197C (Nelson Report, Updated Schedule 11)).

These inconsistencies with Shoals' Tr. (Clarke) at 1008:7.

If the ALJ credits these investments at all, they decrease to almost nothing . In . JX-0133C at Sheet " " at col. Q ( ); Tr. (Nelson) at 864:4-16). Shoals claims that (combined) on *Id.* ( ). Shoals claims that . JX-0133C at Sheet " . Thus, giving full credit to Shoals' faulty .

b. <u>A substantial percentage of Shoals'</u> relate to

In general, the Commission considers sales, marketing, and administrative activities (collectively, "SG&A") to be akin to those of a mere importer and ascribes them less weight in assessing a DI. *See Bone Cements*, Inv. No. 337-TA-1153, Comm'n Op. at 22; *Certain*

Kinesiotherapy Devices and Components Thereof, Inv. No. 337-TA-823, Comm'n Op. at 29-30, n.8, EDIS Doc. ID 513323 (July 12, 2013) ("These expenses primarily relate to sales and marketing and are not the sort of expenditures that the Commission has considered sufficiently related to the claims of the patent. The Commission and the Federal Circuit have generally treated these activities as no different from those of an importer."), *rev'd on other grounds sub. nom.*, *Lelo*, 786 F.3d 879; *Schaper Mfg. Co. v. U.S. Int'l Trade Comm'n*, 717 F.2d 1368, 1373 (Fed. Cir. 1983) ("Also, Schaper's very large expenditures for advertising and promotion cannot be considered part of the production process. Were we to hold otherwise, few importers would fail the test constituting a domestic industry."). Thus, expenditures related to employees in these roles should be calculated separately from expenditures in employees engaged in manufacturing to avoid the artificial inflation of labor expenditures that occurred here.

Shoals claimed roughly between . Tr. (Nelson) at 837:1-7; JX-0133C at Sheets ' ' and ' '; JX-0134C at ; JX 0275C (Nelson Report,

Schedule 12). Of that total, Tr. (Clarke) at 1009:10-14 (counting expenditures in ”); JX-0272 (Nelson Report, Schedule 9); JX-0275C (Nelson Report, Schedule 12). Some of the much higher. For example, . Tr. (Clarke) at 1009:16-19; JX-0133C at Sheet ‘SG&A.’ And “ . Tr. (Clarke) at 1011:1-4. For example, . Tr. (Clarke) at 1011:4-6; JX-0134C at Again, there is no evidence that ties these dramatic increases to the BLA products. RDX-0015C.0026 (JX-0133C at JX-0134C at).

were significant. Tr. (Clarke) at 1009:20-22. Again, pre-allocation, Shoals spent Tr. (Clarke) at 1009:23; JX-0134C at ’ Mr. Bardos testified that . Tr. (Bardos) at 709:12-24. And in that same time frame, Shoals spent . Tr. (Clarke) at 1009:20-25; JX-0134C at Investments in trade shows, in particular, are not cognizable as they are viewed as sales and marketing events. *See Bone Cements*, Comm’n Op. at 29. In fact, Mr. Tolnar testified that Shoals sends a “ ”

Tr. (Tolnar) at 359:8-22. He further admitted that "

Tr. (Tolnar) at 360:7-25. But even worse here,

Tr. (Clarke) at 1010:20-25.

d. Shoals' direct is overstated.

Of Shoals' its second largest category is JX-0133C; Tr. (Nelson) at 830:21-831:5. JX-0272C (Nelson Report, Schedule 9); JX-0133C at Sheet '[16] Said differently, . Tr. (Nelson) at 837:1-7; JX-0272C (Nelson Report, Schedule 9); JX-0133C at Sheet '.'[17] But Mr. Bardos admitted that Shoals , so the that Shoals claims to have . Tr. (Nelson) at 762:15-763:12. In other words, Shoals' expense for is not an accurate "" in the United States, and Shoals offered no methodology or evidence to extract that compensation.

The inconsistencies in Shoals' , its reliance on and overstated undermine any claim that Shoals satisfies the DI requirement under subsection (B).

(5) Shoals' investments are not significant.

A complainant must "provide context of the company's operations, the marketplace, or the industry in question necessary to understand whether the value of its domestic activities is

16

significant or substantial." *Carburetors*, Inv. No. 337-TA-1123, Comm'n Op. at 19. A complainant cannot prove significance in absolute terms. *See Concealed Cabinet Hinges*, Inv. No. 337-TA-289, Comm'n Op., 1990 ITC LEXIS 3, at *33 (concluding complainant's "reliance on the 'absolute' significance of domestic activities fail[ed] to demonstrate that its investment in plant and equipment or employment of labor [was] sufficiently 'significant' to require a finding that a domestic industry exists"); *Certain Microlithographic Machines and Components Thereof*, Inv. No. 337-TA-468, ID at 360-61 EDIS Doc. ID 180059 (Jan. 29, 2003) (rejecting the complainant's argument that "'absolute' analysis is all that is required" and concluding that the complainant failed to prove DI under subsections (A) and (B) ("*Microlithographic*"). And a DI must be "characterized quantitatively, *i.e.*, by the amount of money invested in the plant and equipment." *Lelo*, 786 F.3d at 883. While qualitative evidence may support a finding of whether investments are significant, quantitative evidence is necessary to prove significance. *See id.* at 883; *Elec. Candle*, Inv. No. 337-TA-1195, Comm'n Op. at 11-12.

In the face of clear precedent requiring a showing of quantitative significance, Mr. Nelson first opined on the alleged qualitative significance of Shoals' investments. Tr. (Nelson) at 837:8-838:13; CDX-0012C.30, CDX-0012.31. Mr. Nelson's remaining significance opinions also miss the mark.

Before addressing the flaws with Mr. Nelson's significance metrics, however, two threshold matters must be addressed. First, a because Shoals' claimed DI investments are dramatically overstated, it is impossible to assess the quantitative significance of those investments. Tr. (Clarke) at 1012:4-7. Second, Shoals failed to "provide context of the company's operations, the marketplace, or the industry in question." For example, while Shoals [redacted], Shoals chose not to provide evidence for investments at those

[redacted]

facilities. Tr. (Bardos) at 773:17-775:4. Shoals also did not provide any evidence regarding its [redacted]. *See* Tr. (Bardos) at 768:3-769:4; RX-270C.5. Thus, it is impossible to assess the significance of Shoals' alleged investments in the context of the company's overall business. And there was no testimony at the hearing regarding Shoals' investments in the context of the solar industry. Mr. Nelson testified that the quantum of Shoals investments itself is significant, Tr. (Nelson) at 837:13-16, but "[redacted]." Tr. (Clarke) at 1011:11-22. Each of these matters, on its own, support a finding that Shoals failed to prove its investments are significant.

But to the extent the ALJ assesses significance anyway, each of the three quantitative significance metrics assessed by Mr. Nelson – [redacted] – is flawed. *See* Tr. (Nelson) at 837:8-841:22.

Mr. Nelson compared [redacted]. Tr. (Nelson) at 838:18-839:16. That purported [redacted] is flawed and says little (if anything) about the significance of Shoals' domestic activities. As Mr. Clarke testified, [redacted], which can be affected by external factors, such as market demand or government policies encouraging solar energy. Tr. (Clarke) at 1012:19-103:16. Those factors are unrelated to activity performed by Shoals in the United States (*i.e.*, any value added by Shoals), thereby artificially inflating the value purportedly added in the United States. Tr. (Clarke) at 1012:17-1013:16. Mr. Clarke explained further:

[redacted]

Tr. (Clarke) at 1014:2-21; *see also Microlithographic*, Inv. No. 337-TA-468, ID at 348 (noting that during the trial, complainant "presented no evidence of a comparative or value-added analysis of its domestic to its foreign activities related to the foregoing scanners").

Mr. Nelson's is similarly flawed. Mr. Nelson testified that . Tr. (Nelson) at 839:21-840:6. But, Mr. Nelson omitted from his calculation even though for subsection (B) investments are . *See* Tr. (Nelson) at 834:1-10; Tr. (Nelson) at 836:13-21. During cross-examination, Mr. Nelson conceded that if he had included *See* Tr. (Nelson) at 852:22-855:17.[18] .[19]

Lastly, are not relevant to a significance analysis and even if they were, Mr. Nelson's r is overstated to the extent it includes Tr. (Clarke) at 1012:8-11. *See Certain Mobile Elec. Devices*,

[18] Mr. Nelson did not explain on redirect why he arbitrarily omitted

[19]

Inv. No. 337-TA-1324, Order No. 23 at 13 n.14, EDIS Doc. ID 796192 (May 1, 2023) (stating that sales comparison does not demonstrate significance, because the statute "does not describe significant sales but rather 'significant investment,' 'significant employment,' or 'substantial investment'"). Additionally, as mentioned in the discussion on Mr. Nelson's is susceptible to influence by external factors, such as market demand or government policies encouraging solar energy. Thus, it is not an adequate metric by which to measure significance.

VII. REMEDY & BONDING

Respondents have not violated Section 337, so no remedial orders should issue. Respondents provide their positions on remedy and bond should the Commission find a violation.

A. Limited Exclusion Order

Any limited exclusion order (LEO) should have the following provisions. Any LEO should be tailored to the type of product found to infringe. For example, if a violation is found only as to trunk bus products with even-numbered drop lines and these products are not representative of trunk bus products with odd-numbered drop lines, then the LEO should be specific to Voltage LYNX trunk bus products with an even number of drop lines. Any LEO should explicitly exempt any alternative design products found not to infringe. Any LEO should include a standard certification provision. *See Certain Composite Aerogel Insulation Materials,* Inv. No. 337-TA-1003, Comm'n Op., 2018 WL 8648369, at *40, EDIS Doc. ID 637154 (Feb. 22, 2018). Any LEO should be tailored to minimize injury to third parties and the public interest; for example, any LEO should contain a service and repair exception and the effective date of any exclusion order should be delayed to permit respondents to deliver products to customers under contracts entered into prior to the Target Date. Respondents offer fully customized solar energy solutions that are designed to the specific specifications and unique layouts of each project. *See*, *e.g.*, JX-0192C at

[redacted]

¶¶ 20, 36, 39-41, 43, 97. This means that the accused products are not fungible with other products, so replacing excluded products in a fully-designed solar installation would require a complete redesign with a different supplier, delaying completion of the project. This would unfairly burden third parties and harm the public interest in advancing alternative energy solutions.

B. Shoals is not seeking a cease-and-desist order.

Shoals is not seeking a cease and desist order. *See* EDIS Doc. ID 814046 at ¶ 7-8 ([redacted]).

C. No bond should be required.

During the 60-day Presidential review period ("PRP"), "articles directed to be excluded from entry under subsection (d) . . . shall . . . be entitled to entry under bond prescribed by the Secretary in an amount determined by the Commission to be sufficient to protect the complainant from any injury." 19 U.S.C. § 1337(j)(3). The complainant has the burden of proving the necessity of and amount of any bond. *See Certain Rubber Antidegradants, Components Thereof, and Prods. Containing Same*, Inv. No. 337-TA-533, Comm'n Op. at 40, EDIS Doc. ID 259120 (July 21, 2006). When complainant fails to meet this burden, the Commission requires a zero percent bond. *See*, *e.g.*, *Certain L-Tryptophan, L-Trytophan Prods., and their Methods of Prod.*, Inv. No. 337-TA-1005, Comm'n Op. at 53, EDIS Doc. ID 633623 (Jan. 11, 2018) (finding the administrative law judge "correctly recommended a zero percent bond" where complainants "fail[ed] to satisfy their burden to support a 100% bond or to properly explain why a reasonably royalty or price differential would be impractical"); *Certain Personal Data and Mobile Comm. Devices and Related Software*, Inv. No. 337-TA-710, Comm'n Op. at 85, EDIS Doc. ID 467457 (Dec. 29, 2011) ("Complainants are, or should be aware, that such failure to satisfy their burden to support bonding may result in no bonding at all.") ("*Personal Data*"). In *Personal Data*, for example, the

Commission agreed with ALJ that the bond amount should be zero. *Id.* It rejected the complainant's argument that a "price comparison was not practicable" due to respondent's variety of infringing products, and it noted that the complainant could have demonstrated "appropriateness of bonding based on other factors." *Id.*

No bond should be required here, because Shoals has not proven that it will suffer any injury during the 60-day PRP, nor has it carried its burden of demonstrating the amount of any bond.

(1) Shoals failed to prove it will suffer injury during the PRP.

No bond is necessary, because Shoals failed to show that it would suffer any injury during the PRP. Tr. (Clarke) at 1015:19-21. Shoals did not present *any evidence* that Shoals and Voltage are even in competition with each other. JX-0221C (Whitaker Dep. Tr. at 297:19-298:6; 299:18-300:3). At the hearing, neither Mr. Tolnar nor Mr. Ben Macias, Shoals' chief revenue officer, identified any specific customer lost to Voltage. Tr. (Clarke) at 1015:22-25. And as Mr. Clarke testified, "." Tr. (Clarke) at 1016:1-3. As Shoals' witnesses repeated throughout the hearing, Shoals' products are "100 percent customized" and "specific to a customer." Tr. (Clarke) at 120:5-6; 878:6. There is a lead time for any project that a customer orders. Tr. (Clarke) at 1016:10-14; JX-0322C ¶ 107. "." Tr. (Clarke) at 1016:15-18.

In his expert report, Mr. Nelson identified . Tr. (Nelson) at 860:25-861:17. Mr. Clarke demonstrated that Shoals' sales to

[redacted], indicating that Shoals is [redacted]

[redacted]

JX-0126C (SHOALS00007120); JX-0193 (Nelson Report at ¶ 102) RDX-0015C.0033

RDX-0015C.0033 (JX-0126C). There is [redacted], but Mr. Clarke demonstrated that that [redacted]

[redacted]

JX-0126C (SHOALS00007120) RDX-0015C.0034

[redacted], undercutting any claim that the reduction was a result of competition with Voltage. Tr. (Clarke) at 1017:22-1018:6; RDX-15C.34; JX-126C.

RDX-0015C.0034 (JX-0126C).

Thus, a bond is not necessary, because Shoals did not carry its burden of showing that it will suffer injury during the PRP. Tr. (Clarke) at 1018:7-11.

(2) Shoals failed to meet its burden regarding the amount of any bond.

But even if Shoals had established likelihood of injury during the PRP, like the complainant in *Personal Data*, it failed to prove that a price differential comparison cannot be completed. Shoals failed to provide evidence for its own products "[redacted]" Tr. (Clarke) at 1018:20-23. Because Shoals failed to produce data and accurate calculations for its own products, the Commission should issue a zero percent bond. *See Rubber Antidegradants,* Inv. No. 337-TA-533, Comm'n Op. at 40. In contrast, Voltage did provide the data necessary to calculate an average sales price for its products and explained methodologies by which one could calculate an average sales price for its products. *See* JX-198C at 160-166. Accordingly, the bond amount should be zero.

VIII. CONCLUSION

For the forgoing reasons, Voltage respectfully requests that the ALJ issue an Initial Determination finding no violation.

Dated: April 12, 2024

Respectfully Submitted,

/s/ Yar R. Chaikovsky

Yar R. Chaikovsky
Philip Ou
Bruce Yen
Sojung Yun
Zhaoqi Xu
Brady Schoenlein
Radhesh Devendran
WHITE & CASE LLP
3000 El Camino Real
2 Palo Alto Square, Suite 900
Palo Alto, CA 94306-2109

Jordan Coyle
WHITE & CASE LLP
701 13th St NW # 600
Washington, DC 20005

James Hsiao
WHITE & CASE LLP
16th Floor, York House
The Landmark
15 Queen's Road Central
Hong Kong SAR

WCVoltage337TA1365@whitecase.com

Counsel for Respondents Voltage LLC and Ningbo Voltage Smart Production Co.

CERTIFICATE OF SERVICE

I, Nikole Faasisila, hereby certify that the attached document has been served upon the following parties as indicated below on April 12, 2024.

RESPONDENTS' POST-HEARING BRIEF

The Honorable Lisa R. Barton Secretary to the Commission U.S. International Trade Commission 500 E Street SW, Room 112-A Washington, D.C. 20436	☒ Via EDIS ☐ Via First Class Mail ☐ Via Express Delivery ☐ Via Hand Delivery (copies as required)
Monica Bhattacharyya Administrative Law Judge U.S. International Trade Commission 500 E Street, S.W., Room 317 Washington, D.C. 20436	☒ Via EDIS ☐ Via First Class Mail ☐ Via Express Delivery ☐ Via Hand Delivery (copies as required) ☒ Via Electronic Mail at Bhattacharyya337@usitc.gov
Counsel for Office of Unfair Import Investigations John Shin, Esq. Office of Unfair Import Investigations U.S. International Trade Commission 500 E Street, S.W. Washington, D.C. 20436 (202) 205-3117	☐ Via EDIS ☐ Via First Class Mail ☐ Via Express Delivery ☐ Via Hand Delivery ☒ Via Electronic Mail at John.Shin@usitc.gov
Counsel for Complainants Kirk Harris Eric Maschoff MASCHOFF BRENNAN 111 South Main Street, Suite 600 Salt Lake City, Utah 84111 (801) 297-1850	☐ Via EDIS ☐ Via First Class Mail ☐ Via Express Delivery ☐ Via Hand Delivery ☒ Via Electronic Mail at kharris@mabr.com emaschoff@mabr.com
Counsel for Complainants Charles S. Barquist MASCHOFF BRENNAN 1801 Century Park East, Suite 2400 Los Angeles, California 90071 (949) 202-1900	☐ Via EDIS ☐ Via First Class Mail ☐ Via Express Delivery ☐ Via Hand Delivery ☒ Via Electronic Mail at ShoalsMB-ITC@mabr.com
Counsel for Complainants	☐ Via EDIS

Saloni Mathur MASCHOFF BRENNAN 100 Spectrum Center Drive, Suite1200 Irvine, California 92618 (949) 202-1900	☐ Via First Class Mail ☐ Via Express Delivery ☐ Via Hand Delivery ☒ Via Electronic Mail at ShoalsMB-ITC@mabr.com
Counsel for Complainants Daniel E. Yonan STERNE KESSLER GOLDSTEIN & FOX, P.L.L.C. 1100 K Street, NW, 10th Floor Washington, D.C. 20005 (202) 772-8899	☐ Via EDIS ☐ Via First Class Mail ☐ Via Express Delivery ☐ Via Hand Delivery ☒ Via Electronic Mail at SHOALS-ITC@sternekessler.com

/s/ *Nikole Faasisila*
Nikole Faasisila

CERTIFICATE OF SERVICE

I, Nikole Faasisila, hereby certify that the attached document has been served upon the following parties as indicated below on May 7, 2024.

VOLTAGE RESPONDENTS' PUBLIC POST-HEARING BRIEF

The Honorable Katherine M. Hiner Acting Secretary to the Commission U.S. International Trade Commission 500 E Street SW, Room 112-A Washington, D.C. 20436	☒ Via EDIS ☐ Via First Class Mail ☐ Via Express Delivery ☐ Via Hand Delivery (copies as required)
Monica Bhattacharyya Administrative Law Judge U.S. International Trade Commission 500 E Street, S.W., Room 317 Washington, D.C. 20436	☒ Via EDIS ☐ Via First Class Mail ☐ Via Express Delivery ☐ Via Hand Delivery (copies as required) ☒ Via Electronic Mail at Bhattacharyya337@usitc.gov
Counsel for Office of Unfair Import Investigations John Shin, Esq. Office of Unfair Import Investigations U.S. International Trade Commission 500 E Street, S.W. Washington, D.C. 20436 (202) 205-3117	☐ Via EDIS ☐ Via First Class Mail ☐ Via Express Delivery ☐ Via Hand Delivery ☒ Via Electronic Mail at John.Shin@usitc.gov
Counsel for Complainants Kirk Harris Eric Maschoff MASCHOFF BRENNAN 111 South Main Street, Suite 600 Salt Lake City, Utah 84111 (801) 297-1850	☐ Via EDIS ☐ Via First Class Mail ☐ Via Express Delivery ☐ Via Hand Delivery ☒ Via Electronic Mail at kharris@mabr.com emaschoff@mabr.com
Counsel for Complainants Charles S. Barquist MASCHOFF BRENNAN 1801 Century Park East, Suite 2400	☐ Via EDIS ☐ Via First Class Mail ☐ Via Express Delivery ☐ Via Hand Delivery ☒ Via Electronic Mail at

Los Angeles, California 90071 (949) 202-1900	ShoalsMB-ITC@mabr.com
Counsel for Complainants Saloni Mathur MASCHOFF BRENNAN 100 Spectrum Center Drive, Suite1200 Irvine, California 92618 (949) 202-1900	☐ Via EDIS ☐ Via First Class Mail ☐ Via Express Delivery ☐ Via Hand Delivery ☒ Via Electronic Mail at ShoalsMB-ITC@mabr.com
Counsel for Complainants Daniel E. Yonan STERNE KESSLER GOLDSTEIN & FOX, P.L.L.C. 1100 K Street, NW, 10th Floor Washington, D.C. 20005 (202) 772-8899	☐ Via EDIS ☐ Via First Class Mail ☐ Via Express Delivery ☐ Via Hand Delivery ☒ Via Electronic Mail at SHOALS-ITC@sternekessler.com

/s/ Nikole Faasisila
Nikole Faasisila