EXHIBIT
5

UNITED STATES PATENT AND TRADEMARK OFFICE

BEFORE THE PATENT TRIAL AND APPEAL BOARD

GODBERSEN-SMITH CONSTRUCTION COMPANY
d/b/a GOMACO CORPORATION
Petitioner,

v.

GUNTERT & ZIMMERMAN CONST. DIV., INC.,
Patent Owner.

Case IPR2020-01698
U.S. Patent No. 10,029,749

DECLARATION OF RONALD M. GUNTERT, JR.
IN SUPPORT OF PATENT OWNER'S PRELIMINARY RESPONSE

SmartLeg / AccuSteer Slipform Paver Machine was praised as it allowed the DFWC team to avoid delays as it significantly reduced time spent changing the paving width. *Id.* at 2-3. Particularly, the SmartLeg / AccuSteer technology contributed to DFWC's project success as it allowed for quick tractor width changes, paving in narrow confines thus reducing hand pours, quick maneuvering on site and saved time loading and unloading.

23. Because the SmartLeg / AccuSteer technology revolutionized the paving industry, and G&Z obtained substantial commercial success, competitors copied the technology. Competitors such as Gomaco and the like had access to G&Z's SmartLeg / AccuSteer technology by way of G&Z brochures, newsletters, website, press releases, magazine articles, YouTube videos, and annual tradeshows where the G&Z Slipform Paver Machine(s) were on display, all of which highlighted the SmartLeg / AccuSteer features that Gomaco copied. *See* Ex. 2019 at 2; Ex. 2020 at 4-6; Ex. 2015. Starting in late 2015, and over the next four years, Gomaco added the SmartLeg / AccuSteer features to all of its slipform paving machine models.

24. The similarities between G&Z's SmartLeg / AccuSteer features in its S400 Slipform Paver and Gomaco's GP-2400 slipform paver machine are illustrated below:

G&Z S400	Gomaco GP-2400
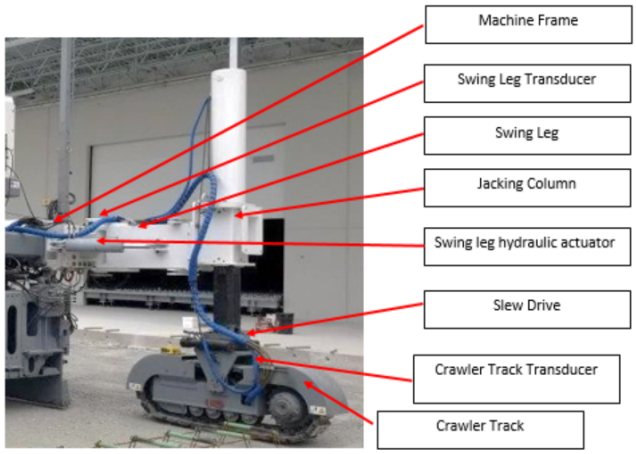	

Further, Gomaco uses an almost identical drawing in their GP3 Brochure as G&Z used in their SmartLeg / AccuSteer Patent to illustrate the SmartLeg / AccuSteer Feature. G&Z's patent drawing is on the left and the GP3 brochure illustration is on the right (yellow):

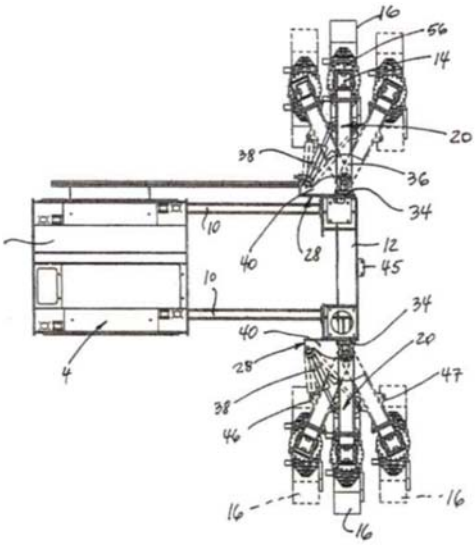

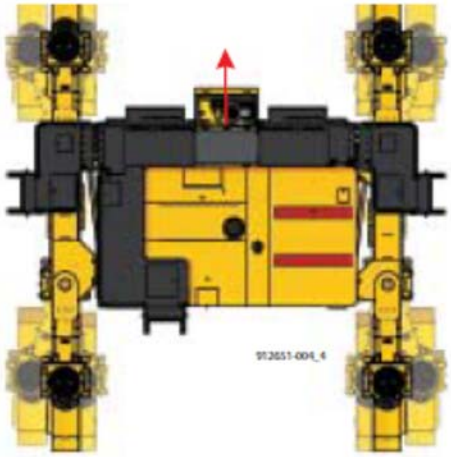

'749 Patent, Fig. 2 (left); Ex. 2025 at 13.

25. Significantly, Gomaco uses G&Z's coined "SmartLeg" in promoting the "Smart Leg" steering capabilities of its slipform paving machines. Ex. 2021 at 166-67.

26. Still further, Wirtgen America, Inc. ("Wirtgen"), a wholly owned subsidiary of John Deere since 2017, is another company in the industry for concrete slipform pavers, released slipform paver machines with G&Z's SmartLeg / AccuSteer features in 2013, following the release of G&Z's S600 Slipform Paver Machine with SmartLeg / AccuSteer technology in Europe in August 2010. The similarities between G&Z's SmartLeg / AccuSteer features in its S400 Slipform Paver Machine (having the same SmartLeg / AccuSteer features as the S600 Slipform Paver Machine) and Wirtgen's SP64i slipform paver machine are illustrated below:

G&Z S400	Wirtgen's SP64i
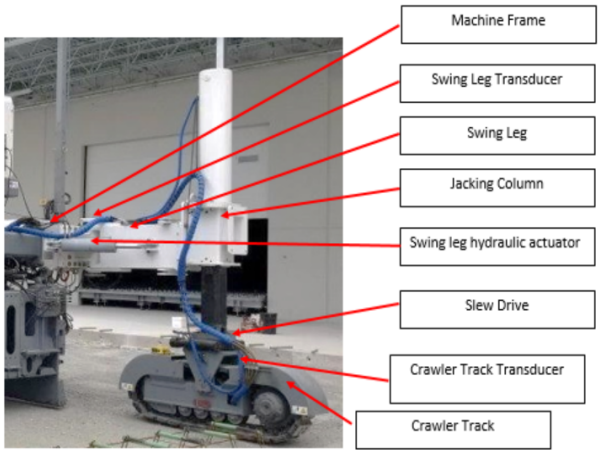	

27. The evidence set forth above demonstrates that Gomaco and Wirtgen copied G&Z's SmartLeg / AccuSteer technology. In addition to these two competitors, a more minor competitor Power Pavers copied G&Z's Smart Leg / AccuSteer technology. Power Pavers, who does not have a large engineering staff, even hired G&Z's retired VP of Engineering as a consultant to help them implement the G&Z SmartLeg / AccuSteer features in its slipform paver machine illustrated below:

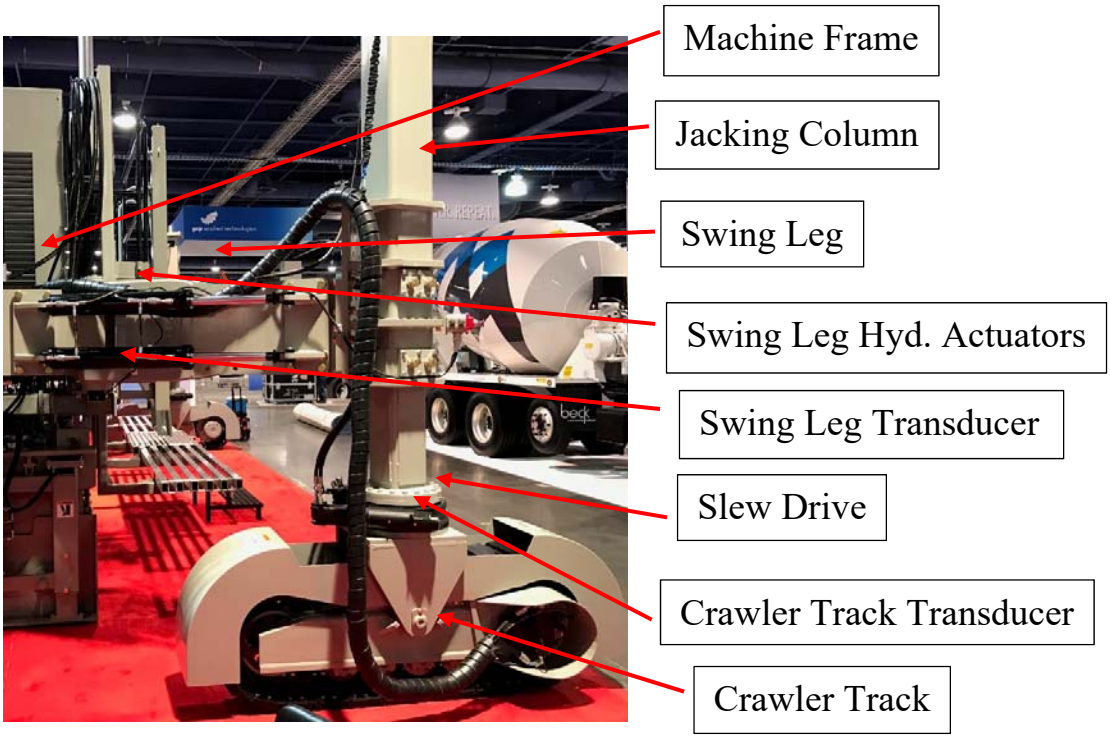

28. I declare under penalty of perjury under the laws of the United States that the foregoing in true and correct. I hereby declare that all statements made herein of my own knowledge are true and that all statements made on information and belief are believed to be true. I further declare that these statements were made

with the knowledge that willful false statements and the like so made are punishable by fine or imprisonment, or both, under Section 1001 of Title 18 of the United States Code.

29. I reserve the right to supplement my opinions in the future to respond to any arguments that Petitioner raises.

Executed on January 18, 2021, in Marathon, Florida.

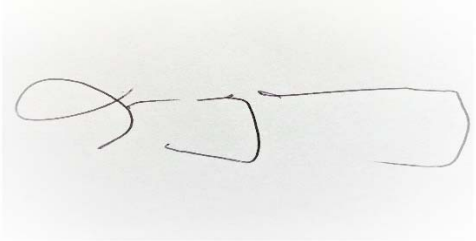

_____
Ronald M. Guntert, Jr.
President and CEO of Guntert &
Zimmerman Const. Div., Inc.

CERTIFICATE OF SERVICE

The undersigned certifies, in accordance with 37 C.F.R. § 42.6(e), that service was made on the Petitioner as detailed below.

Date of service	January 20, 2021
Manner of service	Electronic Mail (Jason.stach@finnegan.com; luke.mccammon@finnegan.com; david.mroz@finnegan.com; sonja.sahlsten@finnegan.com; robert.high@finnegan.com; Gomaco-IPRs@finnegan.com)
Documents served	DECLARATION OF RONALD M. GUNTERT, JR. IN SUPPORT OF PATENT OWNER'S PRELIMINARY RESPONSE
Persons Served	Jason Stach Luke J. McCammon David K. Mroz Sonja W. Sahlsten Robert High

/James Hannah/
James Hannah
Registration No. 56,369
Lead Counsel for Patent Owner