US009131874B2

(12) **United States Patent**
Eliason et al.

(10) **Patent No.: US 9,131,874 B2**
(45) **Date of Patent: Sep. 15, 2015**

(54) **FLUOROSCOPY-INDEPENDENT, ENDOVASCULAR AORTIC OCCLUSION SYSTEM**

(75) Inventors: **Jonathan L. Eliason**, Ann Arbor, MI (US); **Todd E. Rasmussen**, Fair Oaks Ranch, TX (US)

(73) Assignees: **THE REGENTS OF THE UNIVERSITY OF MICHIGAN**, Ann Arbor, MI (US); **The United States of America as represented by the Secretary of the Air Force**, Washington, DC (US)

(*) Notice: Subject to any disclaimer, the term of this patent is extended or adjusted under 35 U.S.C. 154(b) by 310 days.

(21) Appl. No.: **13/642,465**

(22) PCT Filed: **Apr. 21, 2011**

(86) PCT No.: **PCT/US2011/033368**

§ 371 (c)(1),
(2), (4) Date: **Jan. 7, 2013**

(87) PCT Pub. No.: **WO2011/133736**

PCT Pub. Date: **Oct. 27, 2011**

(65) **Prior Publication Data**

US 2013/0102926 A1 Apr. 25, 2013

Related U.S. Application Data

(60) Provisional application No. 61/326,478, filed on Apr. 21, 2010.

(51) **Int. Cl.**
A61B 5/107 (2006.01)
A61M 25/04 (2006.01)
(Continued)

(52) **U.S. Cl.**
CPC ***A61B 5/1076*** (2013.01); ***A61B 5/6851*** (2013.01); ***A61B 17/12031*** (2013.01);
(Continued)

(58) **Field of Classification Search**
CPC A61B 5/107; A61B 5/1072; A61B 5/1075; A61B 10/00; A61B 2010/009; A61B 2025/1052; G01B 3/1084; B42D 15/00; B42D 15/0086
USPC 600/587; 128/897, 898; 606/194; 33/511, 512, 700, 701, 732, 759–761; 73/866.3; 283/67, 70, 115, 117, 900; 434/187, 262–275
See application file for complete search history.

(56) **References Cited**

U.S. PATENT DOCUMENTS

2,156,289 A * 5/1939 Hoy 346/21
4,713,888 A * 12/1987 Broselow 33/512
(Continued)

FOREIGN PATENT DOCUMENTS

WO WO-2004049970 A3 8/2004
WO WO-2007022592 A1 3/2007
(Continued)

OTHER PUBLICATIONS

Sandgren, et al. "The diameter of the common femoral artery in healthy human: influence of sex, age, and body size." Journal of vascular surgery 29.3 (1999): 503-510. Retrieved from <http://www.sciencedirect.com/science/article/pii/S074152149970279X> on Oct. 14, 2014.*
(Continued)

Primary Examiner — Devin Henson
Assistant Examiner — David J McCrosky
(74) *Attorney, Agent, or Firm* — Marshall, Gerstein & Borun LLP

(57) **ABSTRACT**

A system for deploying and selectively inflating a thoracic aortic balloon at a desired location within the thoracic aorta for resuscitative aortic occlusion, inferior to the left subclavian artery, without the aid of fluoroscopy is described. Using CT imaging data, a distance between readily identifiable and consistently located external landmarks of torso extent is measured. Next, using the same data, a second distance from the femoral artery to a desired aortic occlusion location inferior to the left subclavian artery is determined. A correlation between the external measure of torso extent and the desired intra-arterial (i.e. endovascular) distance within the torso is made. Using a nomogram, a calibrated endovascular resuscitative thoracic aortic occlusion system can be positioned to this desired location on any injured individual with end-stage shock and impending cardiovascular collapse or death without the aid of fluoroscopy for delivery or balloon inflation.

6 Claims, 14 Drawing Sheets

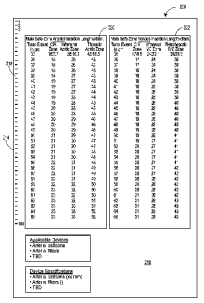

(51) **Int. Cl.**

A61M 25/09	(2006.01)
A61B 5/00	(2006.01)
A61B 17/12	(2006.01)
B42D 15/00	(2006.01)
G01B 3/10	(2006.01)
A61M 25/00	(2006.01)
A61M 25/10	(2013.01)

(52) **U.S. Cl.**

CPC ***A61M25/04*** (2013.01); ***A61M 25/09*** (2013.01); *A61B 5/1072* (2013.01); *A61B 5/1075* (2013.01); *A61M 2025/0008* (2013.01); *A61M 2025/0081* (2013.01); *A61M 2025/09183* (2013.01); *A61M 2025/1052* (2013.01); *B42D 15/0006* (2013.01); *B42D 15/0086* (2013.01); *G01B 3/1084* (2013.01)

(56) **References Cited**

U.S. PATENT DOCUMENTS

4,823,469	A *	4/1989	Broselow	33/760
4,865,549	A *	9/1989	Sonsteby	434/262
4,926,885	A *	5/1990	Hinkle	128/898
5,738,652	A	4/1998	Boyd et al.	
5,911,702	A *	6/1999	Romley et al.	604/509
6,453,572	B2 *	9/2002	Cross et al.	33/563
6,719,720	B1	4/2004	Voelker et al.	
7,434,326	B2 *	10/2008	Gifford	33/528
2008/0027356	A1 *	1/2008	Chen et al.	600/587
2008/0082119	A1 *	4/2008	Vitullo	606/192
2009/0062666	A1 *	3/2009	Roteliuk	600/485
2009/0265951	A1 *	10/2009	Black	33/759
2010/0016735	A1 *	1/2010	Harpas et al.	600/485
2010/0041984	A1	2/2010	Shapland et al.	

FOREIGN PATENT DOCUMENTS

WO	WO-2008013441	A1	1/2008
WO	WO-2006135853	A3	4/2009

OTHER PUBLICATIONS

Sam II, et al. "Blunt traumatic aortic transection: endoluminal repair with commercially available aortic cuffs." Journal of vascular surgery 38.5 (2003): 1132-1135. Retrieved from <http://www.sciencedirect.com/science/article/pii/S0741521403007171> on Oct. 14, 2014.*

Peterson, et al. "Percutaneous endovascular repair of blunt thoracic aortic transection." Journal of Trauma-Injury, Infection, and Critical Care 59.5 (2005): 1062-1065. Retrieved from <http://www.clubdelpercutaneo.org/pdf/Percutaneous%20Endovascular%20Repair%20of%20Blunt/%20Thoracic%20Aortic.pdf> on Oct. 14, 2014.*

Langewouters et al. "The static elastic properties of 45 human thoracic and 20 abdominal aortas in vitro and the parameters of a new model." J. Biomechanics 17.6 (1984): 425-435. Retrieved from <http://dspace.library.uu.nl/bitstream/handle/1874/25204/wessel-ing_84_the%20static%20elastic%20properties%20of%2045%20human.pdf> on Mar. 31, 2015.*

International Search Report and Written Opinion for PCT/US2011/033368 dated Oct. 14, 2011.

* cited by examiner

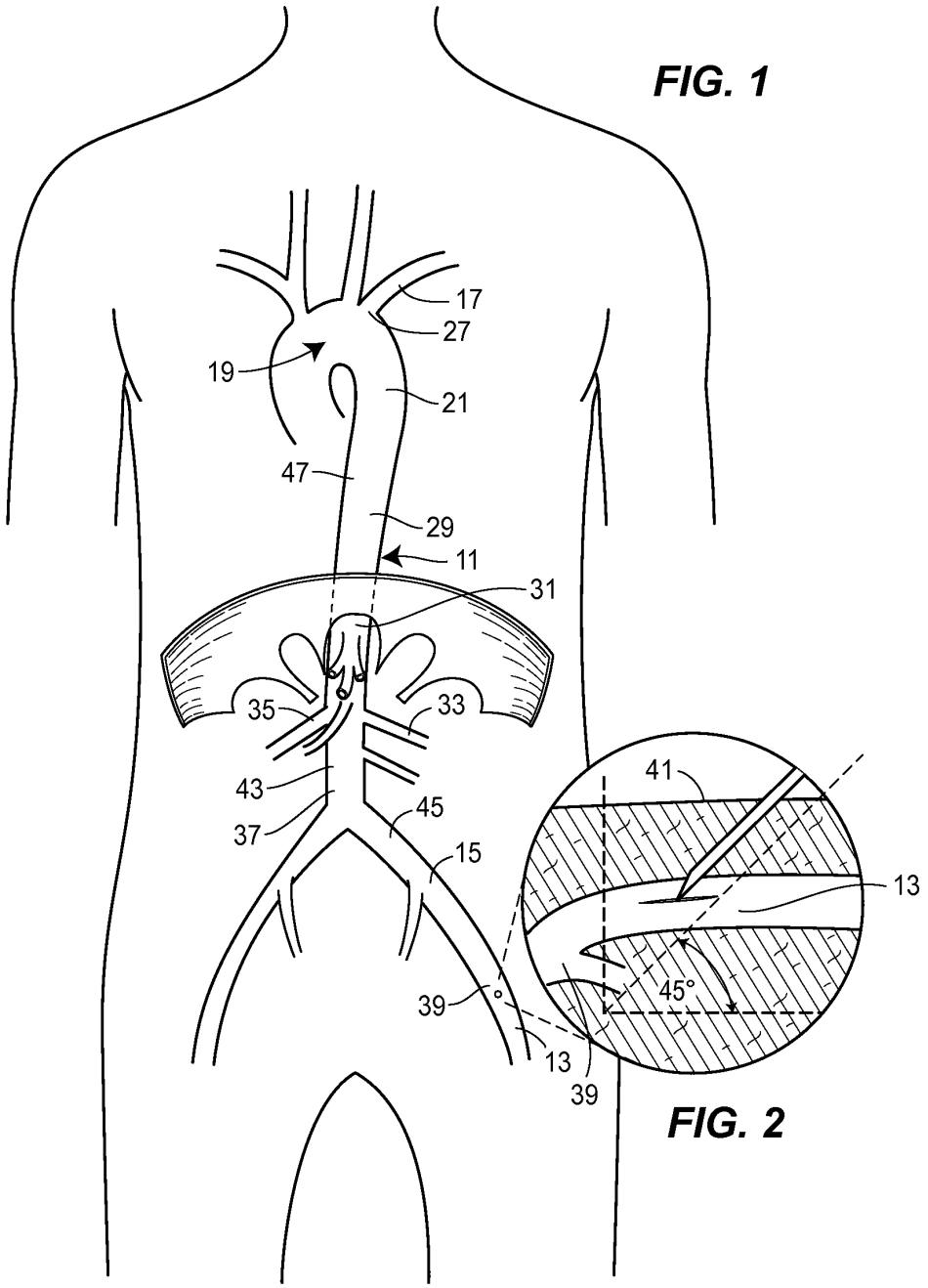

FIG. 1

FIG. 2

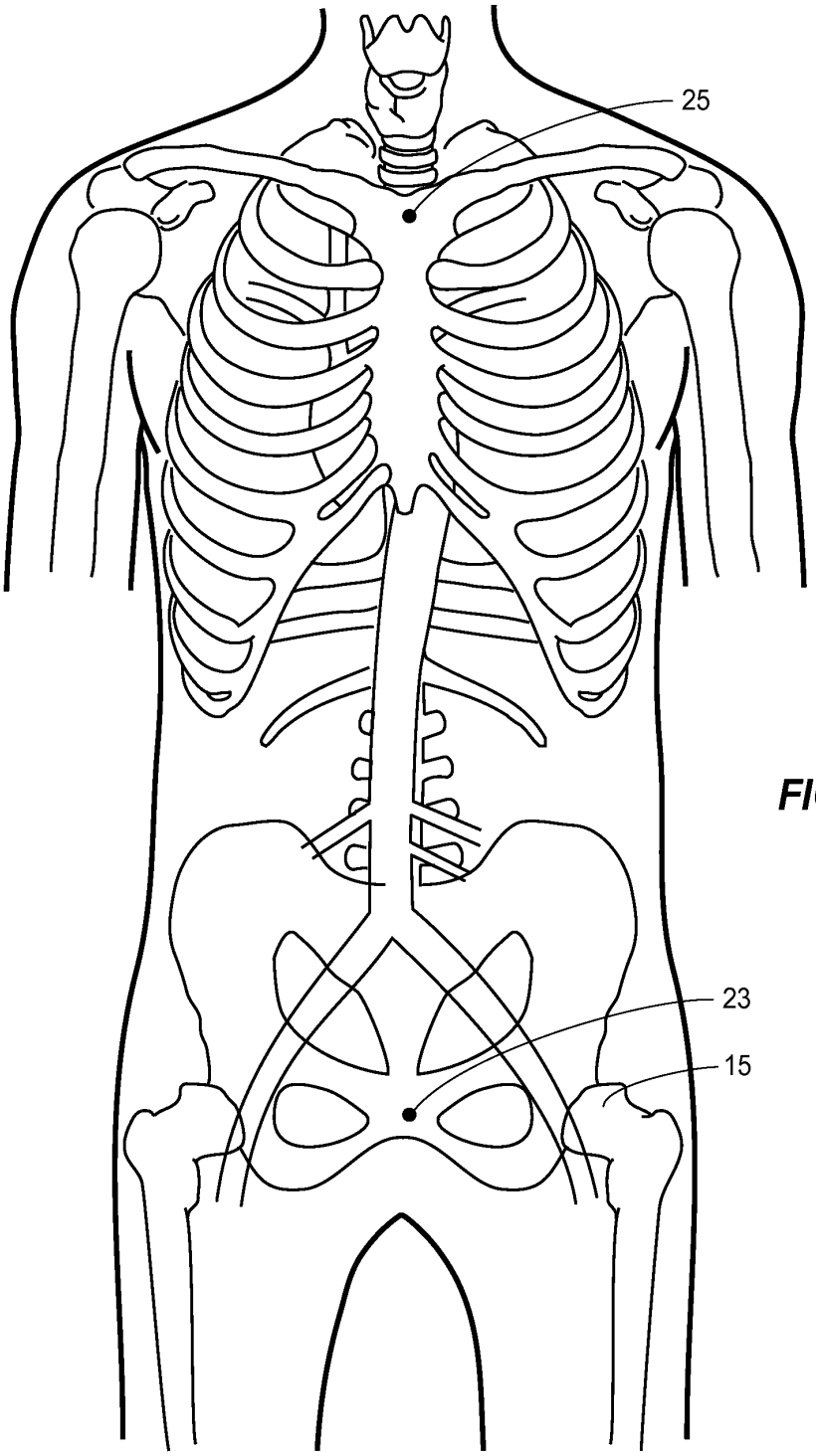

FIG. 1A

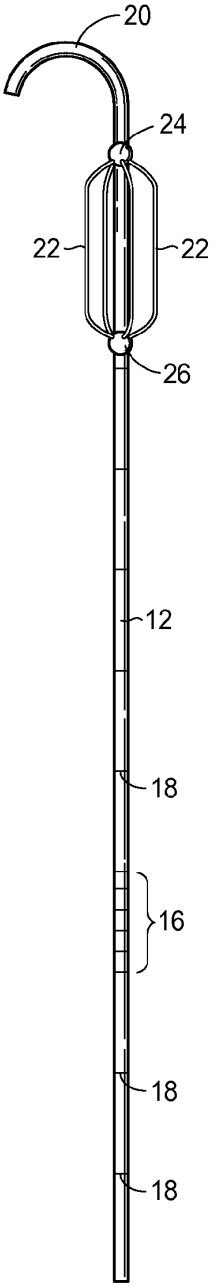

FIG. 3

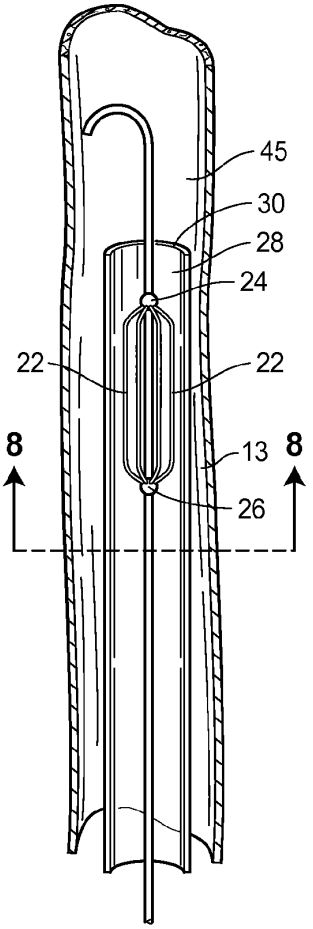

FIG. 4

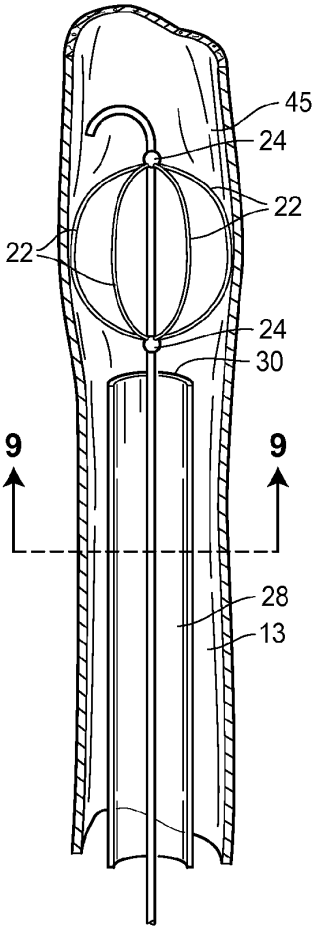

FIG. 5

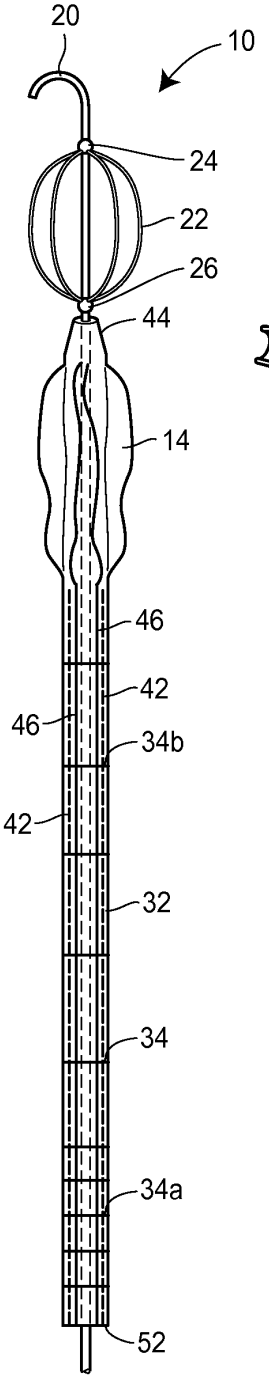
20
10
24
22
26
44
14
46
42
46
34b
42
32
34
34a
52

FIG. 6

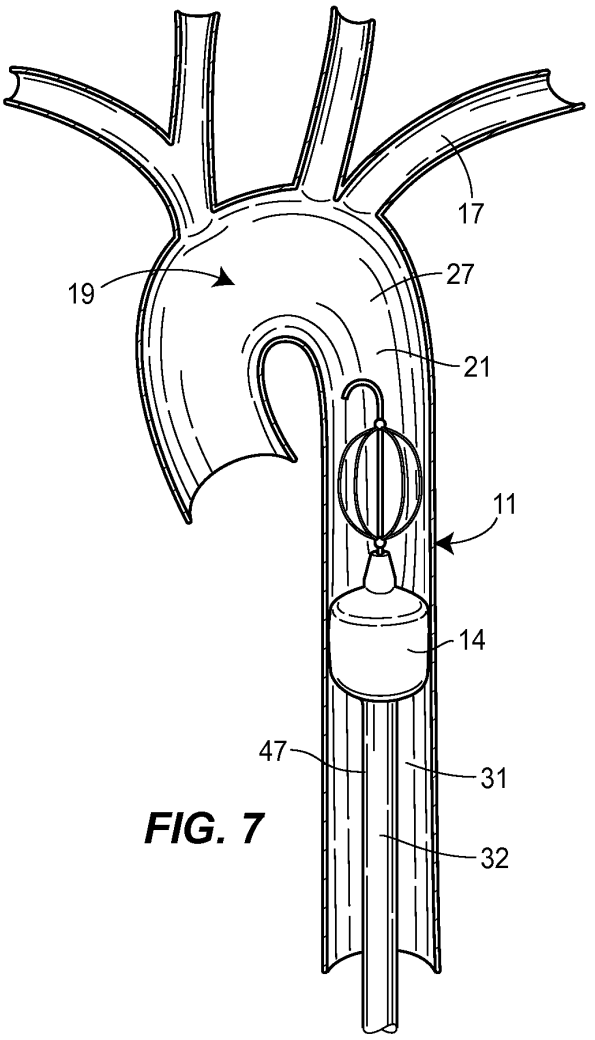
17
19
27
21
11
14
47
31
32

FIG. 7

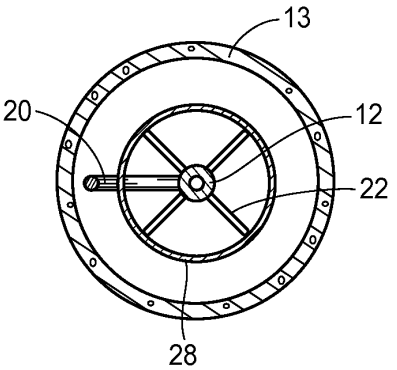

FIG. 8

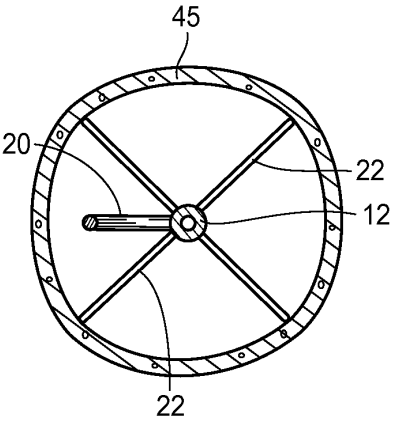

FIG. 9

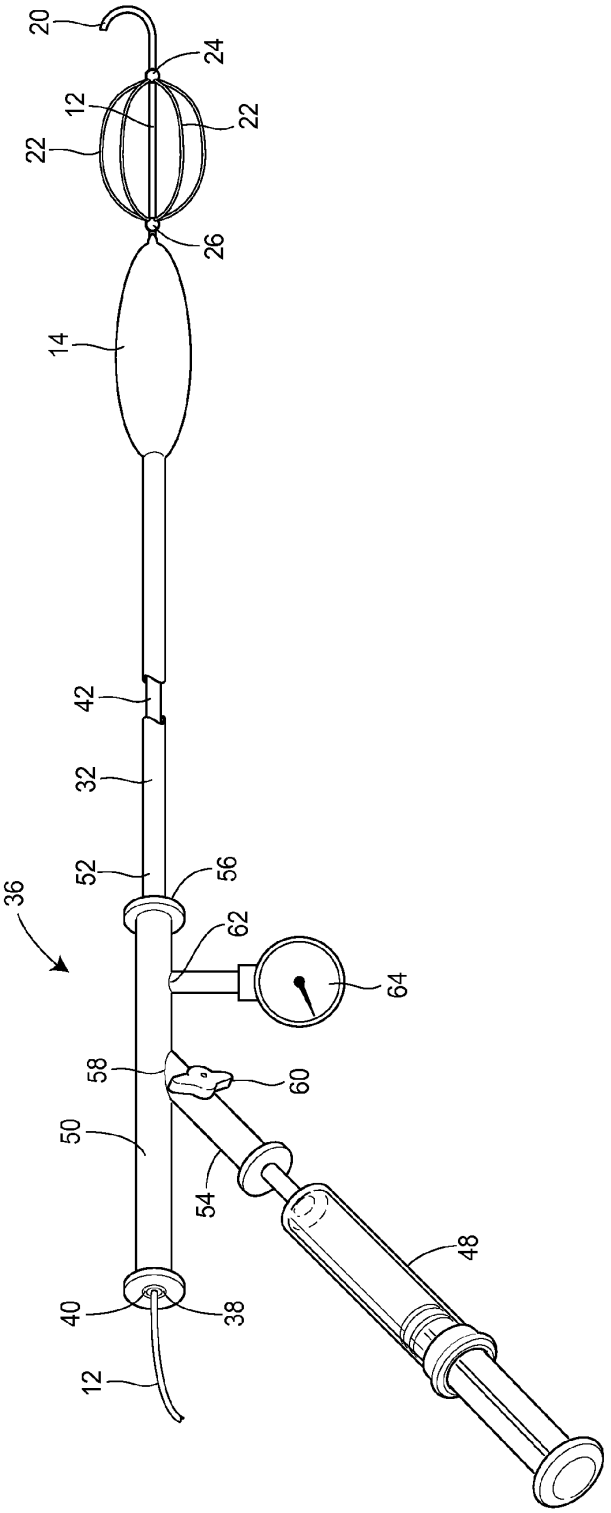

FIG. 10

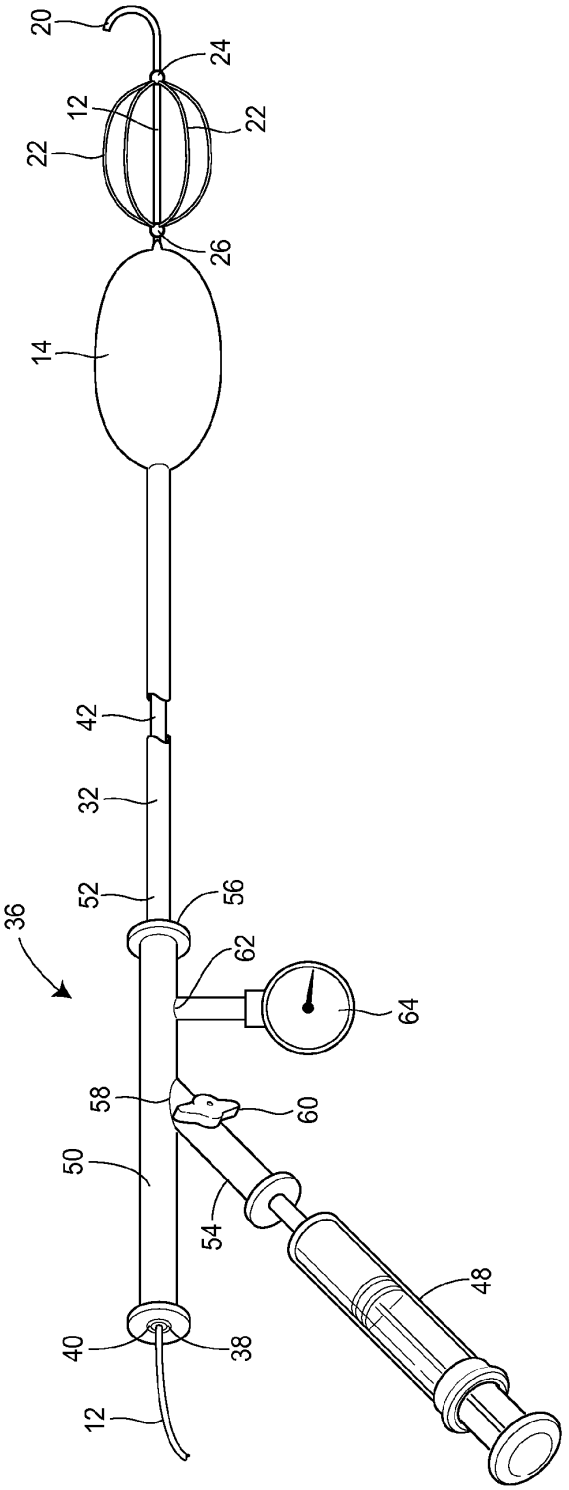

FIG. 11

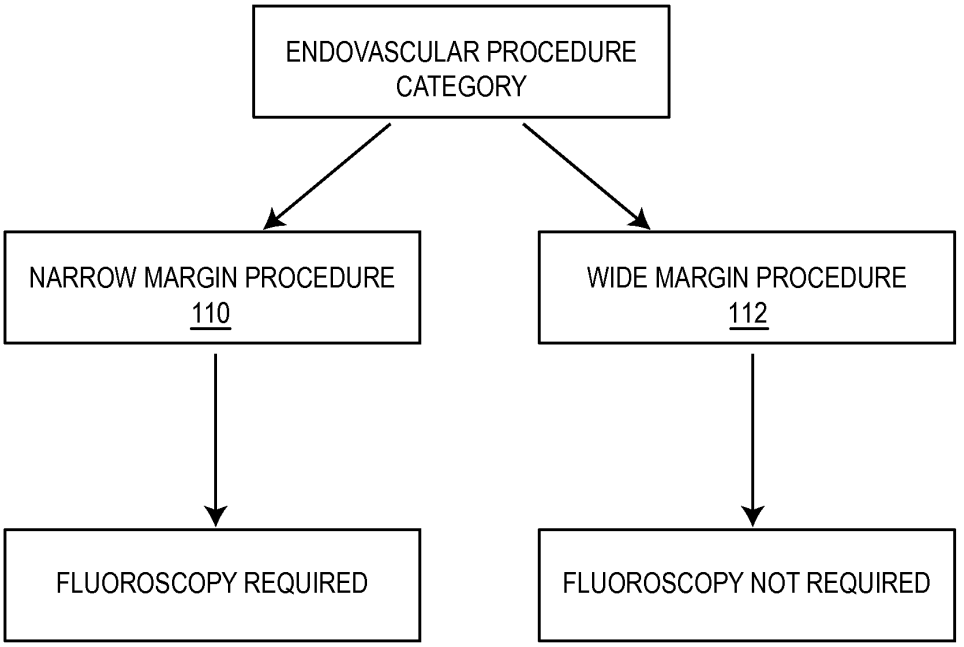
ENDOVASCULAR PROCEDURE CATEGORY
NARROW MARGIN PROCEDURE 110
WIDE MARGIN PROCEDURE 112
FLUOROSCOPY REQUIRED
FLUOROSCOPY NOT REQUIRED

FIG. 12

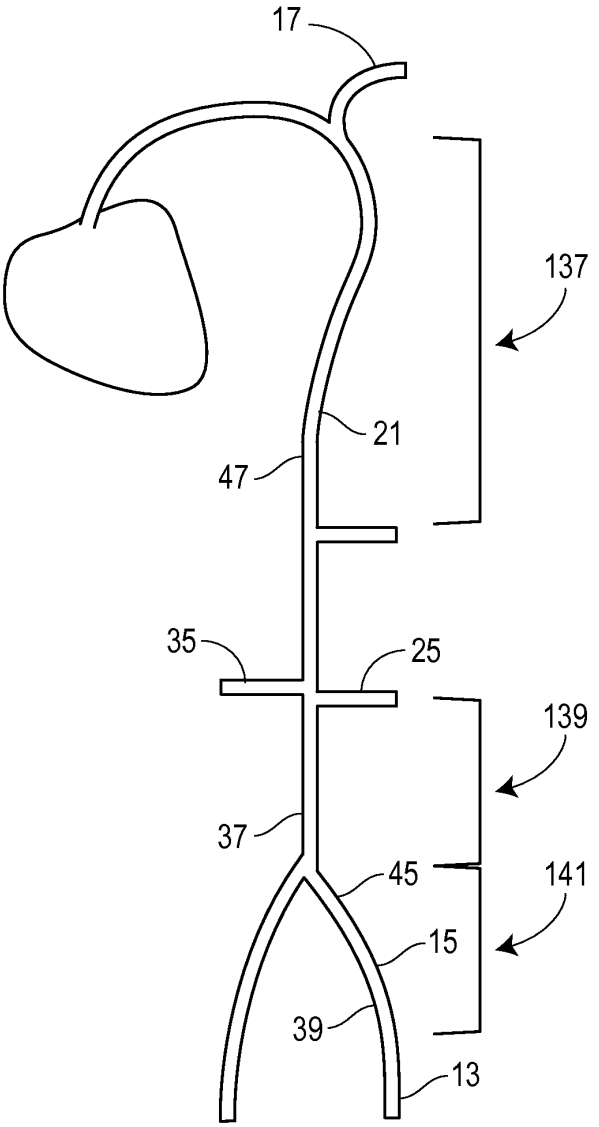

FIG. 13

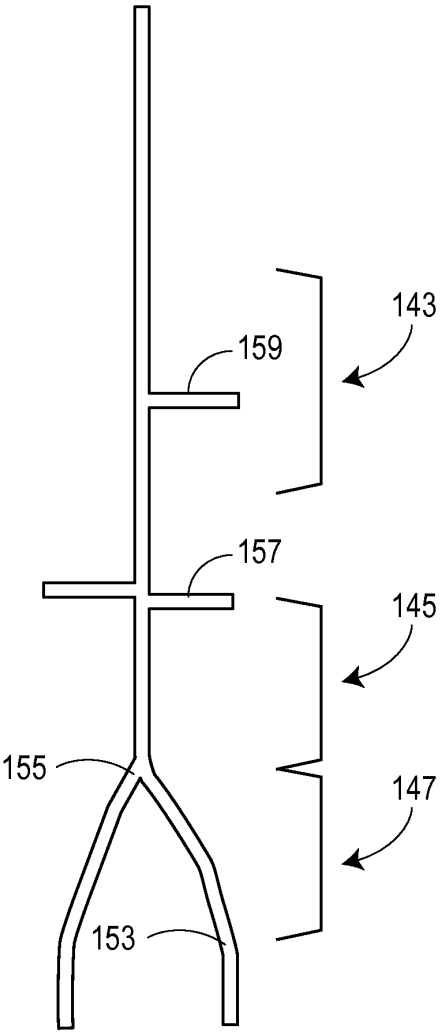

FIG. 14

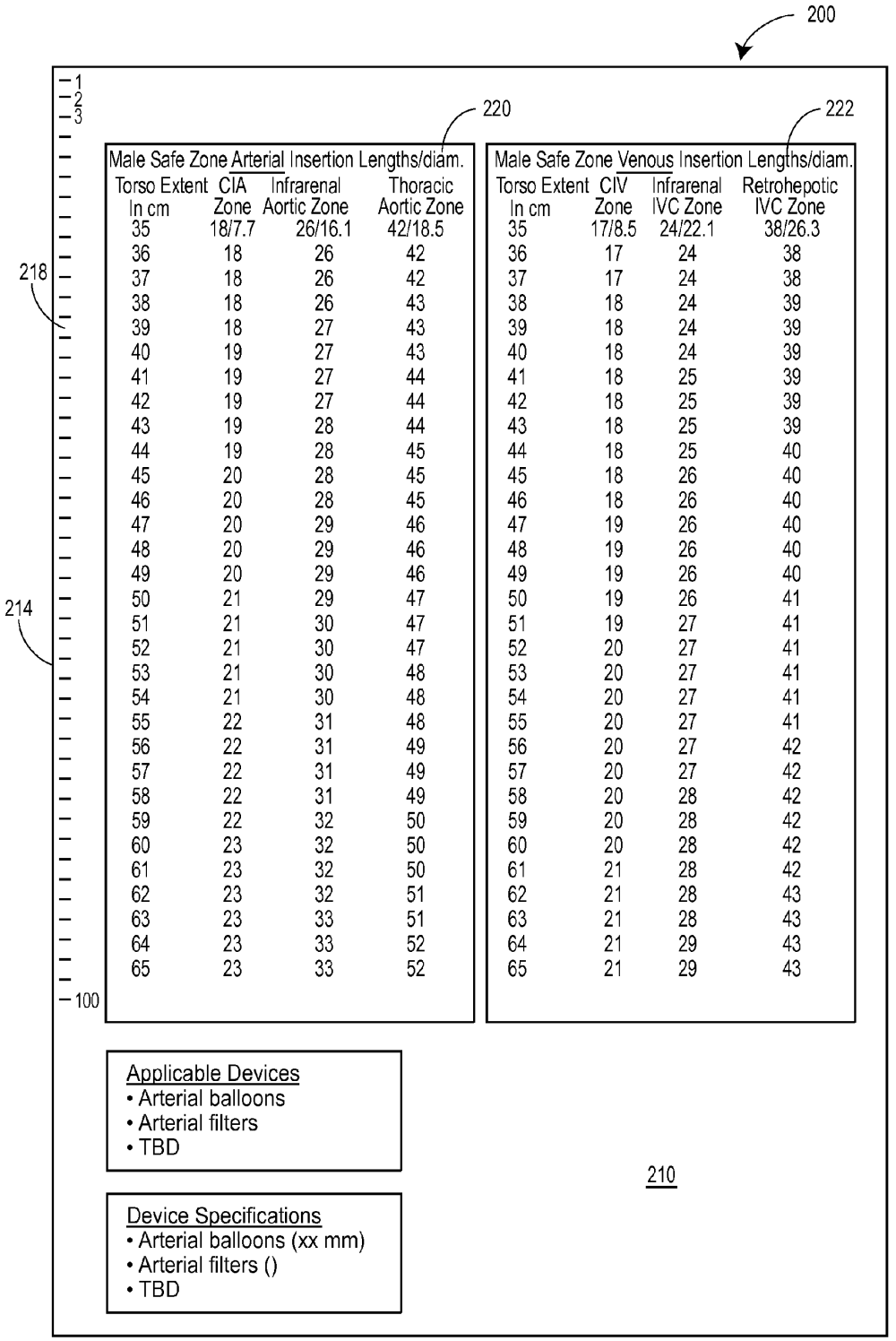

Male Safe Zone Arterial Insertion Lengths/diam.

Torso Extent In cm	CIA Zone	Infrarenal Aortic Zone	Thoracic Aortic Zone
35	18/7.7	26/16.1	42/18.5
36	18	26	42
37	18	26	42
38	18	26	43
39	18	27	43
40	19	27	43
41	19	27	44
42	19	27	44
43	19	28	44
44	19	28	45
45	20	28	45
46	20	28	45
47	20	29	46
48	20	29	46
49	20	29	46
50	21	29	47
51	21	30	47
52	21	30	47
53	21	30	48
54	21	30	48
55	22	31	48
56	22	31	49
57	22	31	49
58	22	31	49
59	22	32	50
60	23	32	50
61	23	32	50
62	23	32	51
63	23	33	51
64	23	33	52
65	23	33	52

Male Safe Zone Venous Insertion Lengths/diam.

Torso Extent In cm	CIV Zone	Infrarenal IVC Zone	Retrohepotic IVC Zone
35	17/8.5	24/22.1	38/26.3
36	17	24	38
37	17	24	38
38	18	24	39
39	18	24	39
40	18	24	39
41	18	25	39
42	18	25	39
43	18	25	39
44	18	25	40
45	18	26	40
46	18	26	40
47	19	26	40
48	19	26	40
49	19	26	40
50	19	26	41
51	19	27	41
52	20	27	41
53	20	27	41
54	20	27	41
55	20	27	41
56	20	27	42
57	20	27	42
58	20	28	42
59	20	28	42
60	20	28	42
61	21	28	42
62	21	28	43
63	21	28	43
64	21	29	43
65	21	29	43

Applicable Devices
- Arterial balloons
- Arterial filters
- TBD

Device Specifications
- Arterial balloons (xx mm)
- Arterial filters ()
- TBD

FIG. 15

200

1
2
3

218

216

100

224

Female Safe Zone Arterial Insertion Lengths/diam.

Torso Extent In cm	CIA Zone	Infrarenal Aortic Zone	Thoracic Aortic Zone
28	16/6.8	23/14.1	30/16.5
29	16	23	38
30	17	23	39
31	17	24	39
32	17	24	40
33	18	25	40
34	18	25	41
35	18	25	41
36	19	26	42
37	19	26	42
38	19	27	43
39	20	27	43
40	20	28	44
41	20	28	44
42	20	29	45
43	21	29	45
44	21	30	46
45	21	30	46
46	21	30	47
47	21	30	47
48	22	31	48
49	22	31	48
50	22	31	49
51	22	31	49
52	22	32	50
53	23	32	50
54	23	32	50
55	23	32	51
56	23	33	51
57	23	33	52
58	23	33	52

226

Female Safe Zone Venous Insertion Lengths/diam.

Torso Extent In cm	CIV Zone	Infrarenal IVC Zone	Retrohepotic IVC Zone
28	14/8.0	22/19.1	34/23.3
29	14	22	34
30	15	23	35
31	15	23	35
32	16	24	36
33	16	24	36
34	17	25	37
35	17	25	37
36	18	25	38
37	18	25	38
38	18	26	39
39	18	26	39
40	19	26	40
41	19	26	40
42	19	26	40
43	19	26	41
44	19	27	41
45	20	27	41
46	20	27	41
47	20	27	41
48	20	27	41
49	20	27	42
50	20	27	42
51	20	28	42
52	20	28	42
53	20	28	42
54	21	28	42
55	21	28	43
56	21	28	43
57	21	29	43
58	21	29	43

Applicable Devices
- Arterial balloons
- Arterial filters
- TBD

212

Device Specifications
- Arterial balloons (xx mm)
- Arterial filters ()
- TBD

FIG. 16

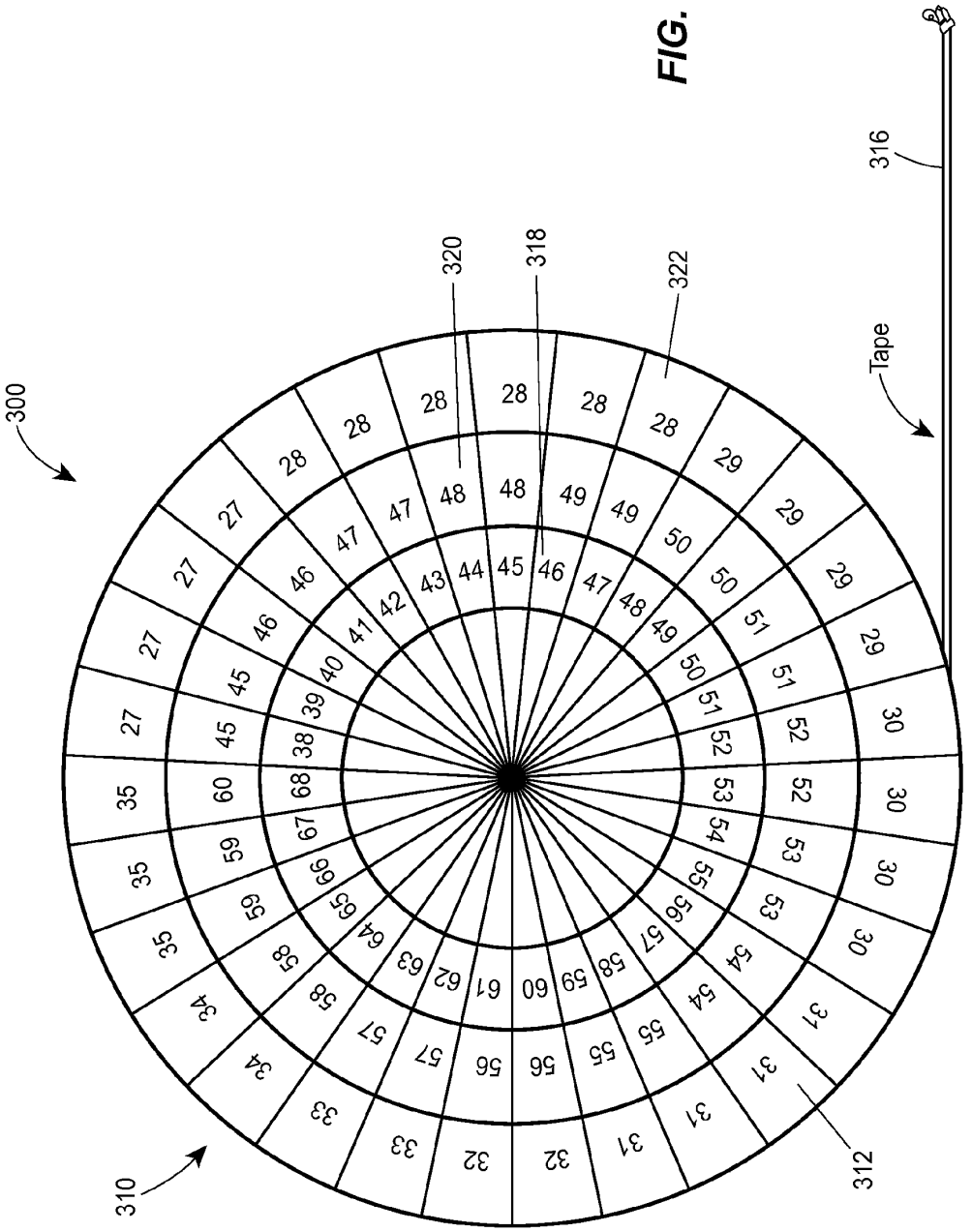

FIG. 17

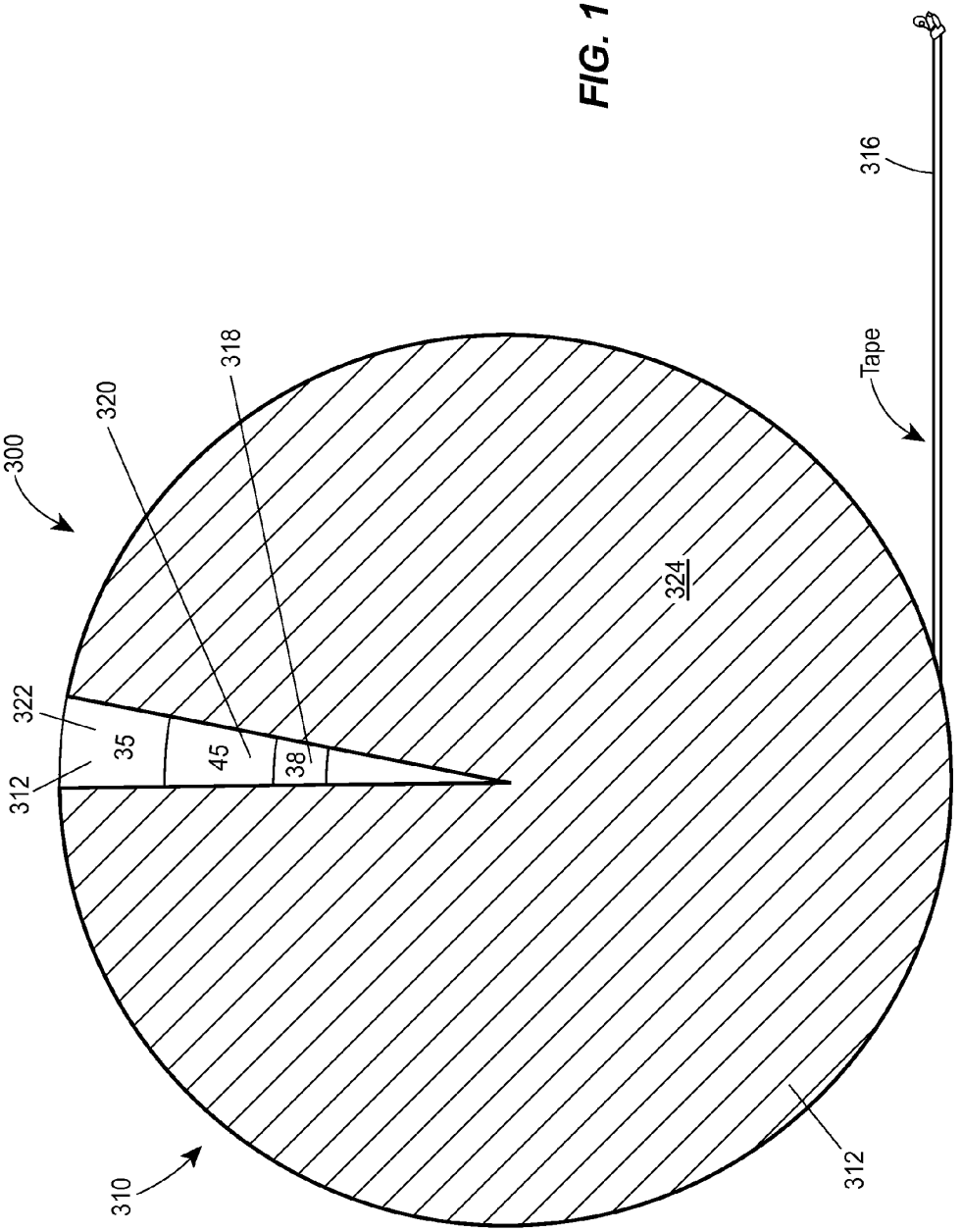

FIG. 18

FLUOROSCOPY-INDEPENDENT, ENDOVASCULAR AORTIC OCCLUSION SYSTEM

CROSS-REFERENCE TO RELATED APPLICATIONS

This is a US national phase under 35 USC §371 of International Patent Application No. PCT/US2011/033368 filed Apr. 21, 2011, which claims the priority benefit of U.S. Provisional Application No. 61/326,478, the entire respective disclosures of which are incorporated herein by reference.

STATEMENT OF GOVERNMENT INTEREST

N/A.

FIELD OF THE DISCLOSURE

This disclosure relates generally to aortic occlusion systems deployed within the aorta, i.e. endovascular, used for resuscitation in the setting of profound shock from hemorrhage or cardiac or neurogenic causes resulting in severe central aortic hypotension and pending cardiovascular collapse. The injury patterns and scenario to which this system most applies, but to which this system is not limited, is torso or junctional hemorrhage not controllable with manual pressure or a tourniquet device, i.e. non-compressible hemorrhage. This disclosure relates further to endovascular resuscitative aortic occlusion systems that are applied rapidly in settings in which fluoroscopy is not available, i.e. fluoroscopy-independent, as a method of occluding the aorta and increasing central perfusion pressure to the heart and brain while controlling hemorrhage distal to the occlusion site.

BACKGROUND OF THE DISCLOSURE

Non-compressible sites of torso vascular injury remain one of the leading causes of potentially preventable death in both active duty troops during wartime conflict and in civilian trauma centers. An example of this type of torso vascular injury is a gunshot wound to the abdomen with a central site of bleeding and a patient in shock. Unlike an extremity injury, wherein a tourniquet could be used for vascular control or direct pressure could be held at select arterial pressure points, vascular injuries to the torso require surgical exposure followed by the often difficult application of vascular clamps for hemorrhage control. In a patient group presenting in shock, the time it takes to achieve such exposure and control may mean the difference between life and death. Specifically, the end stages of shock from hemorrhage or cardiac or neurologic causes are accompanied by critically low blood pressure and circulation to the brain and heart, which eventually lead to neurological death, cardiac arrest, or both.

Currently accepted methods of controlling hemorrhage in other areas of the body are not effective in treating torso hemorrhage. For example, while tourniquets have been developed and used successfully to manage bleeding from injured limbs, they are not successful in controlling torso bleeding. Manual pressure with and without new topical hemostatic agents and bandages has been taught for extremity and head and neck wounds, but is not successful for torso vascular injury. However, without similar expeditious maneuvers to address uncontrolled hemorrhage in the torso, this pattern of bleeding remains the leading cause of potentially preventable death on the modern battlefield and occurs frequently in civilian trauma centers.

Moreover, one currently acceptable method of managing non-compressible torso hemorrhage, i.e., open resuscitative thoracotomy with clamping of the thoracic aorta, has major limitations. For example, the performance of an emergency or resuscitative thoracotomy is maximally invasive as it involves a large opening of the left chest with retraction of the left lung and other vital structures to expose the thoracic aorta for clamping. As such, resuscitative thoracotomy requires specialized surgical instruments and lighting, and can only be performed by a select group of highly trained medical professionals. Patients undergoing this surgical maneuver require general anesthesia with endotracheal tube insertion and mechanical ventilation. If a thoracotomy with aortic cross-clamp placement is successful, the patient will have the added morbidity of an additional, large, cavitary wound from which to recover.

Thoracotomies are considered one of the most difficult surgical incisions to manage post-operatively, as they are extremely painful and frequently lead to lung complications. Chest wall pain and manipulation of the left lung from the procedure can prevent the patient from breathing effectively, and may lead to pneumonia. Notwithstanding these drawbacks, resuscitative thoracotomy is the only known and widely accepted method to control bleeding and support central blood pressure (i.e., perfusion to the heart and brain) in this setting. Acknowledged as an effort of last resort, this complex surgical maneuver is maintained as standard, despite the absence of significant tangible advances in the technique for the last four decades. Aside from refinements in determining which patients are best suited for this surgery, versus those in whom this is futile, the technique of occluding the thoracic aorta through an open incision, retracting the lung and clamping the aorta remains substantially the same in 2010 as it was in 1970. Further, the supporting literature demonstrates that survival associated with this surgery is less than 5%, considering all patients in whom it is performed.

Despite these substantial drawbacks, the fact that the surgical maneuver continues to be pursued, although old, suggests that the purpose behind the surgical maneuver, i.e., resuscitative thoracic aortic occlusion, has physiologic merit. The advantage of occluding the thoracic aorta in this setting is further substantiated by documented attempts at using rudimentary balloons within the thoracic aorta to accomplish this same result, i.e., occluding distal flow to the lower half of the body where the bleeding is occurring, and to support perfusion to the brain and myocardium. More specifically, use of a compliant balloon as a potentially effective treatment to emergency thoracotomy has been quietly explored for decades. The earliest reports describing this exploration in animal models were in the 1950s.

However, the technique of balloon occlusion in the thoracic aorta of young trauma victims was, and continues to be, inadequate because of deficient balloon design and the requirement for fluoroscopy in order to deploy any such devices. For example, currently marketed compliant occlusion balloons are available for use in ruptured aortic aneurysms, which by necessity has resulted in their extremely large diameter (up to 42 mm). Two examples of such aortic balloons are the Reliant (Medtronic Vascular), with a recommended delivery sheath of 12 French, and Coda (Cook Medical), with a recommended delivery sheath of 14 French. Each of these balloon systems require specialized and often scarce radiographic imaging (i.e. x-ray or fluoroscopy) to place and inflate them in the correct position in the thoracic aorta.

These large balloons require large diameter sheaths (12-14 French) which must be placed inside of the femoral and external iliac artery, and have not been designed for use

specifically in the setting of non-compressible torso hemorrhage. In other words, the occlusion balloons have a large diameter design made for use in elderly individuals affected by aneurysm disease, and not for the normal aorta of young adult civilian trauma victims or injured military troops. Also, the delivery shafts of currently available balloons are too flexible to remain in position without a supporting sheath. As such, available occlusion balloons required very large and extended length sheaths in order to be delivered to and maintained or fixed at the desired position in the thoracic aorta.

Further, the balloons mentioned as examples above do not have a mechanism for safeguarding from over-inflation, which is why each must be inflated while being directly visualized using x-ray or fluoroscopy to prevent aortic rupture. For example, U.S. Pat. No. 6,719,720 discloses a two-balloon catheter system having a balloon-within-a-balloon that is designed to limit high arterial pressures to a defined location at the central site of ballooning. However, there is nothing that prevents over-pressurization of the internal aortic balloon.

The conventional technique of balloon occlusion is also limited by reliance upon x-ray or fluoroscopy to deliver and inflate the balloon within the correct position. For example, each of the balloons mentioned above can occlude an aorta, but each needs to be inflated under fluoroscopy to prevent aortic rupture. U.S. Pat. No. 5,738,652 discloses a catheter for use with inducing cardioplegic arrest in a patient that includes at its distal end a balloon "configured to occlude the coronary sinus of a patient's heart, and has a length and flexibility which allow the distal end to be positioned in the coronary sinus with the proximal end extending transluminally to a peripheral vein . . . and out of the body through a puncture therein." See U.S. Pat. No. 5,738,652 (Abstract). However, fluoroscopy is required to use this balloon catheter for such procedures. See U.S. Pat. No. 5,738,652, col. 4, lines 10-16 ("a body of clear fluid can be maintained in the aortic region upstream from the expanded distal end of the aortic catheter to facilitate imaging, e.g., angioscopic observation, of the cardiac procedure") and col. 8, lines 25-27 ("Shaft 122 is preferably radiopaque to permit fluoroscopic observation thereof to facilitate positioning."). Thus, the requirement of x-ray or fluoroscopy to use currently available balloon occlusion systems restricts performance of this procedure to fixed operating rooms with C-arm capabilities or fixed imaging suites, both of which are typically not available in trauma or emergency settings.

In addition to balloon occlusion, various other endovascular procedures are predicted on, or tied to, the use of real time fluoroscopy to visualize devices within the torso vessels. Although fluoroscopy affords visualization of endovascular procedures, the need for this modality carries a significant burden. Specifically, fluoroscopic imaging is costly and its requirement severely limits where catheter-based endovascular procedures can be performed and who can perform them. The requirement for fluoroscopy means that valuable and potentially lifesaving interventions can only be performed by a select number of trained providers in adequately equipped facilities often hours from a point of injury. Even routine or elective endovascular procedures may be delayed as they compete in a resource limited environment among a pool of procedures to be completed using fluoroscopic equipment in the intensive care unit, operating room or endovascular imaging suite. In addition, in emergency, intensive care or surgical environments, fluoroscopy is often not readily available or the environments in which the patients are positioned, e.g., an intensive care unit (ICU) bed or operating room (OR) table, are not specifically made for imaging, thereby impeding the use of fluoroscopy.

U.S. Pat. No. 4,713,888 to Broselow discloses a pediatric emergency tape that informs a physician of equipment lengths and sizes to perform emergency resuscitation on a child. The tape also provides references at each weight zone on the tape corresponding to pre-calculated medication dosages. However, there is no similar device for adult torso vascular anatomy, i.e. morphometry, which will facilitate or guide endovascular procedures of the torso.

In sum, existing and related technologies differ from the system and method of the present disclosure in function and form. Regarding function, current technologies were designed and approved for use in the temporary occlusion of large blood vessels, or to expand vascular prostheses (e.g., endovascular stent grafts in the elderly). In form, however, current related technologies were designed and approved for use with fluoroscopy, for both device positioning and device inflation. In contrast, the system and method of the present disclosure are designed specifically for use in a young adult population exposed to non-compressible torso hemorrhage from trauma or other forms of cardiogenic or neurogenic shock, who have normal aortic diameters, and importantly, without dependence on fluoroscopy.

SUMMARY OF THE DISCLOSURE

Using a sufficiently broad pool of human patients from which statistically reliable data may be drawn, it is possible to mathematically derive a correlation (i.e., nomogram) between readily measurable external torso landmarks and the dimensions of the human aorta within the abdomen and thorax. As used herein, the term nomogram includes one or more tables, charts, graphs, or other visual depiction of a correlation of data. More specifically, it is possible to define, using this easily discernable and consistently located external measure of torso extent, the anticipated lengths or distances of arterial anatomy, i.e. arterial morphometry, between functionally important locations within the torso. This mathematical correlation or nomogram will allow determination of the appropriate distance with which to insert an endovascular wire and aortic occlusion balloon into the torso aorta without the need for fluoroscopy (x-ray). In other words, the nomogram will allow a rapid measure of external torso extent in an injured individual or in an individual suffering from cardiogenic or neurogenic shock which will then provide the correlating distance to which the endovascular wire and resuscitative aortic occlusion balloon should be inserted. The endovascular wire and resuscitative aortic occlusion balloon are inserted through a puncture in the femoral artery to the standard location below the left subclavian artery at which point inflation of the balloon and occlusion of the aorta can be accomplished. The system of the present disclosure employs such data and provides a self-centering endovascular wire having a J tip sheath, introduced through a transdermal or percutaneous sheath (bridging the skin and subcutaneous tissue) to the torso arterial tree at the femoral artery, to deliver a sufficiently compliant aortic occlusion balloon to a location within the thoracic aorta below the left subclavian artery at the aortic arch. This technology enables aortic occlusion to augment heart and brain perfusion in response to non-compressible torso hemorrhage or other forms of shock, even in semi-austere treatment settings that lack access to fluoroscopy. This technology also offers a much less invasive and viable alternative to current procedures for arresting hemorrhage, such as thoracotomy. Once the arterial occlusion balloon is

inflated, blood pressure to the lower extremities and less critical organs is reduced, while blood pressure to the brain and heart is increased, thereby supporting the vital functions of life while corrective actions can be taken.

As used herein, the terms proximal and distal are from the perspective of the physician or other medical professional, such that proximal describes a direction away from a patient, while distal describes a direction toward the patient.

The self-centering endovascular wire of the present disclosure is biocompatible and is provided with calibration indicia, such as major length markers in 5 cm increments and minor length markers in 1 cm increments along the shaft. The J tip is provided at a leading (distal) end of the self-centering endovascular wire to prevent vessel perforation as the wire is advanced along the torso arterial tree toward the thoracic aorta.

Immediately below (i.e., just proximately of) the J tip, four self-expanding nitenol wire projections are provided encircling the endovascular wire, which can move along the endovascular wire as they expand or contract. Two beads are provided to anchor the four self-expanding projections relative to the endovascular wire, with one of the beads at a leading or distal end of the four self-expanding projections, and the other of the beads at the trailing or proximate end of the four self-expanding nitenol wire projections. The beads are of a diameter sufficiently small to pass through the transdermal or percutaneous sheath, yet large enough to prevent movement of an arterial occlusion balloon, delivered on the endovascular wire, past the four self-expanding nitenol wire projections.

The transdermal or percutaneous sheath, by way of example, may be a 6 French sheath having a length of about 10 cm. Upon insertion and advancement of the percutaneous sheath into the femoral artery at the femoral head, the distal outlet end of the sheath is open to an interior of the external iliac artery. When inserted into the sheath, the four self-expanding nitenol wire projections of the self-centering endovascular wire are in their unexpanded state. Each of the nitenol wires has a diameter of approximately 0.014 inch. When advanced outside the sheath into the external ileac artery, each of the four nitenol wire projections reacts to human body temperature and expands, until the strut portion (between the anchoring beads) reaches an overall cross-sectional dimension within a range of about 5 mm to as much as about 25 mm, with the wire projections opposing the arterial wall in all directions. The expanded state of the wire projections causes the shaft of the lead portion of the endovascular wire to be centered in the arterial lumen, helping prevent the endovascular wire from inadvertently diverting into an undesired arterial branch, such as the kidney arteries arising from the abdominal aorta, along the course of its travel toward the thoracic aorta inferior to the left subclavian artery. The thermal expansion of the four nitenol wire projections, or struts, is a reversible process, such that when it is desired to remove the endovascular wire from the patient, the four nitenol wire projections can be re-constrained or collapsed as they re-enter the transdermal sheath.

The aortic occlusion balloon includes a 2-lumen hollow balloon shaft. The distal lumen extends the length of the catheter, including a tapered tip to prevent the balloon from passing over the proximal bead anchor of the self-centering nitenol wire strut mechanism on the self-centering endovascular wire. The balloon shaft may include pre-calibrated length markers. The other lumen communicates with the balloon and is used to expand and deflate the balloon. A terminating port with a one-way valve may be provided to be engaged by a fluid source, such as a syringe, for selective inflation and deflation of the arterial occlusion balloon. A pressure gauge may be provided in communication with the valve at the terminating port, which may be calibrated to alert the physician when sufficient pressure has been attained to adequately inflate the aortic occlusion balloon. The self-centering wire and occlusion balloon may be inserted as a single unit or device.

In another aspect of the disclosure, an apparatus and method of determining endovascular insertion lengths and diameters based upon external torso anatomy without the use of fluoroscopy is provided. The apparatus and method are particularly useful in emergency, intensive care unit, or surgical environments where apparatus insertion into the vascular tree, be it arterial or venous, has been dependent upon fluoroscopy that is now not readily available.

In such emergency settings, for example, vascular lengths may be estimated based on carefully prescribed algorithms that correlate these average vascular lengths and diameters for men and women to external torso extent, e.g., the distance between the sternal notch to the symphisis pubis. This distance can be easily measured by drawing an extendible tool, such as a tape or telescoping measuring device, across a patient's body and holding the tool between these two external points of torso measurement.

BRIEF DESCRIPTION OF THE SEVERAL VIEWS OF THE DRAWINGS

FIG. **1** is an anatomical representation of a human body, illustrating the arterial path from the common femoral artery to the thoracic aorta, inferior to the left subclavian artery at the aortic arch;

FIG. **1**A is an anatomical representation of a human body, illustrating consistently identifiable external boney landmarks of the torso;

FIG. **2**, embedded within FIG. **1**, illustrates hollow needle entry into the left common femoral artery at the femoral head to allow first placement of a wire through the hollow needle into the common femoral artery in the direction of the external iliac artery or torso, and then, after removal of the needle from over the wire, placement of a transdermal sheath over the wire and into the artery, establishing a working port within the lumen of the blood vessel;

FIG. **3** is an enlarged plan view of a self-centering endovascular wire of the present disclosure;

FIG. **4** is a perspective view of the self-centering endovascular wire of FIG. **3** as it is extended in its constrained or collapsed form through a transdermal sheath from the femoral artery into the external iliac artery;

FIG. **5** is a perspective view of the thermally-activated self-centering endovascular wire and transdermal sheath similar to FIG. **4**, illustrating the self-centering nitenol wire struts on the endovascular wire in an expanded condition or form after exiting the transdermal sheath within the external iliac artery;

FIG. **6** is a perspective view of the self-centering endovascular wire with an arterial occlusion balloon disposed proximally of the self-centering nitenol wire struts, illustrating the arterial occlusion balloon in an uninflated condition;

FIG. **7** is a plan view of the self-centering endovascular wire and arterial occlusion balloon of FIG. **6** in an implanted and inflated condition within the thoracic aorta, inferior to the left subclavian artery;

FIG. **8** is a cross-sectional view, taken along lines **8-8** of FIG. **4**;

FIG. **9** is a cross-sectional view, taken along lines **9-9** of FIG. **5**;

FIG. **10** is a perspective view of a multi-way port affixed to a balloon shaft of the arterial occlusion balloon of FIG. **6**, illustrating a one-way valve associated with a main port of the multi-way port in a closed position, preventing fluid communication between a fluid source, such as a syringe, and the balloon shaft and preventing the passage of an inflation medium through the port;

FIG. **11** is a perspective view of the multi-way port of FIG. **10**, illustrating the one-way valve in an open position, permitting fluid communication between a fluid source, such as a syringe, and the balloon shaft to achieve inflation or deflation of the arterial occlusion balloon and an inflation medium through the port and into the balloon shaft;

FIG. **12** is a flow chart illustrating endovascular procedure categories in large axial vessels of a human torso;

FIG. **13** is an anatomical representation of the human body, illustrating arterial torso vascular anatomy;

FIG. **14** is another anatomical representation of the human body, illustrating venous torso vascular anatomy;

FIG. **15** is a front perspective view of an exemplary torso vascular insertion tool;

FIG. **16** is a back perspective view of the exemplary torso vascular insertion tool;

FIG. **17** is a front perspective view of a second embodiment of an exemplary torso vascular insertion tool; and

FIG. **18** is a front perspective view of the second embodiment of the exemplary torso vascular insertion tool having a cover disposed thereon.

DETAILED DESCRIPTION OF THE PREFERRED EMBODIMENTS

A thoracic aortic occlusion system **10** of the present disclosure is illustrated in FIG. **6**. This thoracic occlusion system **10**, and method of using the same, employs correlation data extracted from a statistically reliable pool of human patients. As used herein, even reference numerals denote structural features of the thoracic aortic occlusion system **10**, while odd reference numerals denote anatomic locations of a human. The system **10** relies upon this data to predict the arterial measurement of a normal torso arterial tree **11** from the femoral artery **13** at the level of the femoral head **15** to a level just below **21** the left subclavian artery **17** at the aortic arch **19** (or other relevant locations), each of which is illustrated in FIG. **1**. Using this prediction model or nomogram, a trained medical professional can derive the distance to which a calibrated, self-centering endovascular wire **12** of the present disclosure should be advanced from the femoral artery **13** into the descending thoracic aorta **29** to a level just below **21** the left subclavian artery **17** and the aortic arch **19** before deploying an occlusion balloon **14** (FIG. **6**) over this endovascular wire **12** to the same position. More specifically, the occlusion balloon **14** is deployed at a location **21** inferior of the left subclavian artery **17** at the aortic arch **19**, in an effort to augment or support heart and brain profusion in the setting of end-stage shock resulting from non-compressible torso hemorrhage.

The prediction model or nomogram may be developed from, by way of example, a population of male and female trauma patients between the ages of 18-45 years. Computed tomographic measurements are made from the pool of patients to develop statistical associations between distances separating consistently located, external anatomical or boney landmarks and measurements (namely length and diameter data) within the central vascular anatomy.

A first anatomical landmark distance measured for each patient is a torso extent (in cm), from the symphysis pubis **23** to the sternal notch **25**, as illustrated in FIG. **1**A. Center-line measurements are also taken (in cm) from the femoral artery **13** at the level of the femoral head **15** to the left subclavian artery **17**. These measurements are supplemented with center-line measurements (in cm) from the femoral artery **13** at the level of the femoral head **15** to seven additional key points of anatomical interest, including: (a) the left subclavian artery origin **27**; (b) the artery of Adamkiewics origin **29**; (c) the celiac artery origin **31**; (d) the left renal artery origin **33**; (e) the right renal artery origin **35**; (f) the aortic bifurcation **37**; and (g) the iliac artery bifurcation **39**. In addition to measuring the center-line distance from the femoral artery **13** at the level of the femoral head **15** to these various locations, cross-sectional diameter (in mm) and cross-sectional area (in mm^2) measurements are also determined for each respective vessel. A measurement is also taken of the distance (in mm) a hollow tip access needle would traverse at a 45° insertion angle from the epidermis layer of the skin **41** to an initial entry point of the femoral artery **13**, which may be referred to as a percutaneous access length measurement.

For each of the measurements described above, data is collected and means, standard deviations, and 95th % confidence intervals are calculated, by gender, for minimum, maximum, 1st, 5th, 10th, 25th, median, 75th, 90th, 95th, and 99th percentiles. Based on these calculations, a mathematical model employing height and gender as covariates defining the statistical association between the external measure of torso extent (i.e., distance from the symphysis pubis **23** to the sternal notch **25**) and the central vasculature anatomy data is created. This mathematical model or nomogram may be the basis for a conversion chart that a medical professional, unaided by fluoroscopic guidance (i.e. fluoroscopy-independent), may use to calculate the proper insertion distance of the calibrated endovascular wire **12** of the thoracic aortic occlusion system **10** for a given patient.

Turning now to FIGS. **3-11**, the thoracic aortic occlusion system **10** is illustrated. Referring now to FIG. **3**, the system includes a self-centering endovascular wire **12**, preferably made of a biocompatible wire having calibration indicia thereon, such as pre-calibrated minor length markers **16** provided at 1 cm intervals, and major length markers **18** provided at 5 cm intervals along the length of the self-centering endovascular wire **12**. By way of example, the overall length of the self-centering endovascular wire **12** may be 180 cm and have a diameter of approximately 0.035 inch. The self-centering endovascular wire **12** includes a J tip **20** at a distal end thereof. The J tip **20** is used to minimize trauma to or perforation of the arterial vessels as the endovascular wire **12** is advanced along the torso arterial tree **11**. The J tip **20** is also sufficiently flexible to unfold in the event the J tip **20** was to hook onto an arterial branch, such as during withdrawal of the endovascular wire **12**.

Immediately proximate of the J tip **20** is a plurality of self-expanding wire struts **22**. The wire struts **22** extend between a leading securement bead **24** and a trailing securement bead **26**, both of which secure the wire struts **22** to the endovascular wire **12**. The self-expanding wire struts **22** are made of a material that expands upon exposure to fluid at body temperature, such as nitenol, and are disposed at sufficient intervals about the endovascular wire **12**, such as four self-expanding wire struts **22** at 90° intervals. These struts **22**, when in their collapsed state such as during insertion through a transdermal sheath **28**, will span the length of the securement beads **24** and **26**. However, the struts **22** will shorten in the length as they extend over the endovascular wire **12** when in their expanded state, such as within the descending thoracic aorta **21**, and as such the wire struts **22** will be movable

to some extent axially relative to the endovascular wire **12**, but between the securement beads **24** and **26**. In this manner, the self-expanding wire struts **22** serve a self-centering function, keeping the tip or leading end of the endovascular wire **12** away from the sidewalls of the arterial vessels, helping to prevent the endovascular wire **12** from turning down an unintended branch. For example, the left renal artery origin **33** (FIG. **1**), the right renal artery origin **35** (FIG. **1**), and the celiac artery origin **31** (FIG. **1**) each can branch off from the abdominal aorta **43** at a 90° angle thereto. The nitenol self-expanding wire struts **22** serve to maintain the endovascular wire **12** within the abdominal aorta **43** (FIG. **1**).

Referring now to FIG. **4**, a transdermal or percutaneous sheath **28**, preferably 6 French, and by way of example having a length of approximately 10 cm with an inner diameter of approximately 0.087 inches is illustrated. The sheath **28** is inserted into the femoral artery **13** through a puncture in the skin **41** (FIG. **2**) with a hollow tip needle to provide an access port by way of first a wire and then the sheath **28**. The distal end **30** of the sheath **28** is positioned within the external iliac artery **45** (FIG. **1**).

The endovascular wire **12**, the J tip **20**, the leading securement bead **24**, the trailing securement bead **26**, and the unexpanded occlusion balloon **14** (which is disposed proximate to the trailing securement bead **26** and illustrated in FIG. **6**) are all of sufficiently small cross-sectional dimensions to pass through the sheath **28**. The leading securement bead **24** and the trailing securement bead **26** are also of a sufficient diameter so as to prevent the occlusion balloon **14** from migrating distally over the wire struts **22** and past the J tip **20**.

Referring now to FIG. **6**, the aortic occlusion balloon **14** is carried on a balloon shaft **32** having pre-calibrated length indicia **34** thereon. The pre-calibrated length indicia **34** may include minor length markers **34***a* in 1 cm increments, and major length markers **34***b* in 5 cm increments. The balloon shaft **32** preferably has a length of approximately 90 cm (35.43 inches) and an outer diameter less than approximately 1.98 mm (0.087 inches), so as to fit through the sheath **28**. The balloon shaft **32** includes a lumen **42** (see also FIGS. **10** and **11**), permitting the balloon shaft **32** to pass over the endovascular wire **12**. A tapered distal end portion **44** of the balloon shaft **32** prevents the balloon shaft **32** from being inserted past the trailing securement bead **26**. The balloon shaft **32** will remain over the self-centering endovascular wire **12** during occlusion balloon inflation to provide a rigidity that is sufficient to permit the balloon to be manually maintained at a desired location within the thoracic aorta **47** (FIG. **1**), resisting distal or caudal migration, such as might otherwise result from aortic pulsation.

The aortic occlusion balloon **14** has a length of approximately 3 cm, and is affixed to the end of the balloon shaft **32** less than 1 cm below (proximally of) the tapered distal end portion of the balloon shaft **44**. As indicated above, the aortic occlusion balloon **14** is inserted (in a collapsed state) through the transdermal or percutaneous sheath **28** with the endovascular wire **12** and the balloon shaft **32**.

Upon navigating the endovascular wire to the desired location within the thoracic aorta **47**, an inflation fluid is introduced through the balloon shaft **32** to the aortic occlusion balloon **14**, causing the aortic occlusion balloon **14** to inflate, as illustrated in FIG. **7**. By way of example, the aortic occlusion balloon **14** may, upon inflation to approximately 1 atm, expand to a maximum diameter of approximately 26 mm, conforming to the shape of the thoracic aorta **47**, thereby obstructing blood flow through the thoracic aorta **47** inferiorly of the inflated aortic occlusion balloon **14** and promptly augmenting heart and brain profusion. The inflation fluid is a sterile biocompatible fluid introduced to the multi-port and valve assembly **36** (FIGS. **10** and **11**) using a fluid source, such as a syringe **48**. Upon removal of the sterile inflation fluid, the aortic occlusion balloon **14** deflates, permitting withdrawal thereof through the transdermal or percutaneous sheath **28**.

As illustrated in FIGS. **10** and **11**, the aortic occlusion balloon **14** is inflated and deflated via a multi-port and valve assembly **36**. The multi-port and valve assembly **36** includes a one-way valve, which is preferably pressure gauge calibrated so as to alert a physician when the aortic occlusion balloon **14** has reached its desired inflation pressure. The multi-port and valve assembly **36** further includes a terminating port **38**, with a diaphragm **40**. The endovascular wire **12** can extend through the diaphragm **40**, while maintaining fluid-tight communication between the multi-port and valve assembly **36** and the aortic occlusion balloon **14**. The multi-way port and valve assembly **36** further includes an elongate tubular barrel section **50** affixed to a proximal end **52** of the balloon shaft **32**. The elongate tubular barrel section **50** may have a length of approximately 10 to 15 cm. The elongate tubular barrel section **50** does not pass through the transdermal sheath **28** or enter the body of the patient. In addition to the terminating port **38**, which may be considered a first port, the multi-way port and valve assembly **36** includes a second port **56** at a distal end. As discussed above, the multi-way port and valve assembly **36** further includes a diaphragm **40**, which is disposed at a proximal end of the elongate tubular barrel section **50**. The diaphragm **40** permits the endovascular wire **12** to pass through and extend externally of the first port **38**, while maintaining a fluid-tight connection, thereby avoiding leakage of bodily fluid through the first port **38**.

A side port **58** and a branch **54** off the elongate tubular barrel section **50**, intermediate the first port **38** and second port **56**, enables attachment of the syringe **48** to the multi-way port and valve assembly **36**. A one-way valve **60** is actuable between an open condition (permitting passage of inflation fluid therethrough), as illustrated in FIG. **11**, and a closed condition (preventing passage of inflation fluid), as illustrated in FIG. **10**. Preferably, the one-way valve **60** is in an open condition when oriented parallel to the branch **54** off the elongate tubular barrel section **50** (FIG. **11**), and is in a closed condition when rotated to a position perpendicular to the branch **54**. An additional port **62**, provided intermediate the one-way valve and the proximal end **52** of the balloon shaft **32** to which the multi-way port and valve assembly **36** is affixed, is provided with a pressure monitoring device **64**. A physician may monitor the pressure monitoring device **64** during inflation, enabling the physician to determine when the pressure within the occlusion balloon **14** and the balloon shaft **32** has reached a pressure of, for example, 2 atm, so as to avoid over-inflation and potential injury to the thoracic aorta **47**.

Using a correlation chart or nomogram derived from the statistical data regarding the measurements between the consistently identifiable external measures or landmarks of torso extent (e.g. the symphysis pubis **23** and the sternal notch **25**), the physician calculates the proper distance to which the endovascular wire **12** and balloon shaft **32** are to be inserted into the transdermal sheath **28** through a puncture in the skin **41** and into the femoral artery **13** at the location of the femoral head **15**, thereby positioning the aortic occlusion balloon **14** at the desired location **21** within the thoracic aorta **47**, inferiorly of the left subclavian artery **17** without the aid of fluoroscopy (i.e. fluoroscopy-independent). The major length markers **18** along the endovascular wire **12** may be annotated with length-identifying numbers to facilitate determination of the length to which the self-centering endovascular wire **12**

has been advanced within the torso arterial tree **11**. Upon insertion to the desired length, with the one-way valve **60** in the open condition, the physician actuates a piston of the syringe **48**, thereby introducing inflation fluid through the balloon shaft **32** and into the occlusion balloon **14**, inflating the occlusion balloon **14** to a volume sufficient to block the thoracic aorta **47**.

The endovascular, fluoroscopy-independent resuscitative thoracic aortic occlusion system **10** of the present disclosure may be provided to users in the form of a kit, enabling assembly of the same at, by way of example only, a forward surgical hospital close to a battlefield in a civilian trauma setting either outside of a hospital or in a resuscitation room of an emergency department. The system **10** may be applied in clinical scenarios other than traumas addressed in such urgent care settings, such as cardiac arrest, neurogenic shock, or postpartum hemorrhage that may occur in operating or delivery rooms. The kit may include the endovascular wire **12** having the J tip **20** and at least one wire strut **22** disposed proximally to the J tip **20**. The kit may further include the occlusion balloon **14** that may be disposed proximally on the balloon shaft **32**, and advanced over the endovascular wire **12** until it reaches the trailing securement bead **26**. The transdermal sheath **28** may also be a part of the kit, such that the transdermal or percutaneous sheath **28** is able to receive each of the endovascular wire **12**, the occlusion balloon **14** when in an uninflated condition, and the balloon shaft **32**, as described above. When assembled with the endovascular wire **12**, the balloon shaft **32**, and the transdermal sheath **28**, the occlusion balloon **14** may be selectively inflated and deflated at a desired location within the thoracic aorta **47** of a patient to treat vascular injury without the aid of fluoroscopy.

The kit may further include the multi-port and valve assembly **36** in fluid communication with both the proximal end of the balloon shaft **32** and a fluid source, such as the syringe **48**, as also described above. One of a table, a nomogram, a chart or a graph correlating distances between at least readily externally identifiable anatomical landmarks of a pool of humans to distances from the femoral artery **13** to a location within the thoracic aorta **47** to which the endovascular wire **12** and the balloon shaft **32** are to be inserted may also be included in the kit.

Referring now to FIGS. **12-18**, additional embodiments of the present disclosure are illustrated. Referring to FIG. **12**, endovascular procedures in large axial vessels of the human torso may be considered as narrow margin procedures **110** or wide margin procedures **112**. In other words, many catheter-based procedures in the aorta and vena cava require exact positioning of devices to be safe and effective, and, therefore, have a narrow margin of error during procedures. The narrow margin procedures **110** require standard fluoroscopy to effectively and accurately direct the procedure. Examples of narrow margin procedures **110** include: (1) placement of stent grafts to treat age-related aneurysms near major branch vessels of the thoracic or abdominal aorta; or (2) treatment of local or localized disease processes such as arterial stenoses caused by atherosclerosis with balloon angioplasty and bare metal stents. Because these procedures entail placing devices at the exact location, i.e., within millimeters, of vital branch or vein locations, they require real time visualization using contrast agents and fluoroscopy.

Other catheter-based endovascular procedures have a wider margin of error. Examples of wide margin procedures **112** include positioning of occlusion balloons to control torso hemorrhage, vena cava filter devices to prevent pulmonary embolus, and stent grafts to treat vessel disruptions localized by computed tomography (CT). In the case of balloon occlusion, the goal is to temporarily halt flow beyond a certain point in the vena cava or aorta to aid with hemorrhage control. Additionally, in the setting of aortic occlusion, life-preserving blood pressure above, or proximal to the balloon occlusion, is maintained or supported. In these instances, the balloon may be positioned anywhere over a much longer length of vessel, e.g., within several centimeters, prior to inflation. Similarly, positioning and placement of thromboembolic filter devices in the vena cava may occur over a relatively wide distance of vessel, e.g., between the iliac vein confluence and the renal veins. Thus, in such wide margin procedures, fluoroscopy is not required.

While fluoroscopy is not required, a detailed characterization of the axial vessels of the human torso is necessary to accomplish such procedures in fluoroscopy free environments. Contrast-enhanced computer tomography (CT) using 64-panel detectors and special measuring software allows for such detailed characterization. More specifically, software programs placed in or alongside CT units allow precise centerline measurements within the axial vessels as well as determination of their diameter. Application of centerline measurements allows definition of clinically relevant distances between a standard vascular entry point, i.e., femoral vessels and major branch artery points within the vessels.

Referring back to FIG. **1**, the normal torso arterial tree **11** with major branch artery points is illustrated. The major branch artery points include a left femoral artery **13**, an external iliac artery **45**, and a left subclavian artery **17**. Center-line measurements are taken (in cm), for example, from the femoral artery **13** at the level of the femoral head **15** to the left subclavian artery **17**, as the left femoral artery **13** is a common vascular entry point. As also illustrated in FIG. **1**, other major branch artery points include the artery of Adamkiewics origin **21**, the celiac artery origin **31**, the left renal artery origin **33**, the right renal artery origin **35**, the aortic bifurcation **37**, and the iliac artery bifurcation **39**. In addition to measuring the center-line distance from the femoral artery **13** at the level of the femoral head **15** to these various locations, cross-sectional diameter, e.g., in mm, and cross-sectional area, e.g., in mm2, measurements are also determined for each respective vessel.

Referring now to FIG. **13**, arterial torso vascular anatomy is illustrated with various landing zones within the thoracic aorta **47** for wide margin procedures **112**. For example, a thoracic aortic zone **137** is disposed below a region adjacent to the left subclavian artery **17** along a descending thoracic aorta **47**. An infrarenal aortic zone **139** is disposed between left renal artery **25** and the iliac artery **45**, and a common iliac artery zone **141** is disposed between the aortic bifurcation **37** and a distal end of the femoral artery **13**.

Referring now to FIG. **14**, venous torso vascular anatomy is illustrated with various landing zones within the vena cava for wide margin procedures. For example, a retro-hepatic inferior vena cava zone **143** is disposed along a descending thoracic aorta **47**. An infrarenal IVC zone **145** is disposed below the retro-hepatic inferior vena cava zone **143**, and a common iliac vein zone **147** is disposed below the infrarenal IVC zone **145**.

To further characterize torso vascular morphometry, it is necessary to account for the relationship between vascular lengths and diameters and an individual's length or height. Because patient height is not consistently available, especially in the context of emergencies or trauma, an external measure of torso extent is needed.

Referring back now to FIG. **1**A, an external measure of torso extent is illustrated. This measure extends from a sternal notch **25** to the symphisis pubis **23** and can be readily palpated and recorded, even in emergency and trauma settings. Not only is the external measure of torso extent readily available,

but it provides a measure which is specific to the torso that houses vascular anatomy of interest.

Determination of vascular lengths or distances within the torso from a readily available external measure of torso extent requires correlation of this data to form a nomogram. The nomogram defines, with a predetermined confidence interval, the relationship between the external measure of torso extent and distances within the axial vessels of the torso, as well as the specific vessel diameters. If considered from the perspective of a common vascular entry point such as the femoral vessels, to clinically important branch points or landing zones **137-147** within the aorta or vena cava, the nomogram is relevant to the performance of wide margin endovascular procedures. The nomogram allows a provider to quickly estimate from a basic external measure, e.g., the distance between the sternal notch **25** and the symphysis pubis **23** (FIG. **1**A), the distance from the femoral vessels to landing zones in the descending thoracic aorta **47** or the inferior vena cava.

Referring now to FIGS. **15** and **16**, an exemplary torso vascular insertion tool **200** is illustrated. The tool **200** translates data from the above-described correlation and nomogram, making such information useful in a clinical setting. More specifically, and referring now to FIG. **15**, a first side **210** of the tool **200** is illustrated. The first side **210** includes an edge **214** and a calibrated ruler **218** disposed on the edge **214** of the first side **210** for use in measuring a torso extent length, i.e., the length between the sternal notch **25** and the symphisis pubis **23** (FIG. **1**A), on a patient. Adjacent to the calibrated ruler **218** on the first side **210** of the tool **200** is a first chart **220** providing a listing, by way of example, of male safe zone arterial insertion lengths from the femoral artery **13** vessels to relevant landing zones within the aorta. Such landing zones include the thoracic aortic zone **137**, the infrarenal aortic zone **139**, and the common iliac artery (CIA) zone **141**. Adjacent to the first chart **220** disposed on the first side **210** of the tool **200** is a second chart **222**. The second chart **222** provides a listing, by way of example, of male safe zone venuous insertion lengths from the femoral artery **13** vessels to relevant landing zones within the vena cava. Such landing zones include the retro-hepatic inferior vena cava (IVC) zone **143**, the infrarenal IVC zone **145**, and the common iliac vein (CIV) zone **147**. For the torso arterial segment, the tool **200** provides distances from the femoral artery **13** to the aortic bifurcation **37**, the lowest renal artery **33**, the celiac artery **31**, and the left subclavian artery **17** (see FIGS. **1** and **13**). Venous insertion distances are provided from the femoral vein **153** to the bifurcation of the vena cava **155**, the lowest renal vein **157**, and the hepatic vein **159** (see FIG. **14**).

Referring now to FIG. **16**, a second side **212** of the exemplary torso vascular insertion tool **200** is illustrated. The second side **212** includes an edge **216** and a calibrated ruler **218** disposed on the edge **216** also for use in measuring on a patient the external torso extent between the sternal notch **25** and the symphisis pubis **23** (FIG. **1**A), but this time for a female patient. A third chart **224** is disposed adjacent to the calibrated ruler **218** on the second side **212** of the tool **200**. The third chart **224** provides, by way of example, a listing of female safe zone arterial insertion lengths from the femoral artery **13** vessels to relevant landing zones within the aorta. Such landing zones also include the thoracic aortic zone **137**, the infrarenal aortic zone **139**, and the common iliac artery (CIA) zone **141**. Adjacent the third chart **224** is a fourth chart **226**. The fourth chart **226** provides, by way of example, a listing of female safe zone venuous insertion lengths from the femoral artery **13** vessels to relevant landing zones within the vena cava. Such landing zones include the retro-hepatic inferior vena cava (IVC) zone **143**, the infrarenal IVC zone **145**, and the common iliac vein (CIV) zone **147**.

The second side **212** may also include a listing of the diameter of the torso axial vessels at clinically important locations. More specifically, the back side **212** of the tool **200** provides the diameter of the iliac artery **39**, the thoracic aorta **47**, for the torso axial vessels. The venous diameters include the iliac vein and infrarenal and suprarenal vena cava. The second side **212** may also include clinically relevant specifications for endovascular devices commonly used in wide margin endovascular procedures **112**, such as compliant balloons, basic stent grafts, and vena cava filters.

While various numerical indices and zones are included in the exemplary tool **200**, the tool **200** is but one example; actual devices could use different numerical indices and zones than those provided in the exemplary tool **200** and still be within the scope of the appended claims.

Referring now to FIG. **17**, a second embodiment of another exemplary torso vascular insertion tool **300** is illustrated. The torso vascular insertion tool **300** includes a data-wheel **310** having a first side **312**, a second side (not shown) and a tape **316** wound between the first and second sides **312** of the data-wheel **310**, a portion of the tape **316** extending along one side of the data-wheel **310**. The tape **316** is used to measure on a patient the external measure of torso extent between the sternal notch **25** and the symphisis pubis **23** (FIG. **1**A). By way of example, the first side **312** of the data-wheel **310** provides listings of male safe zone arterial insertion lengths from the femoral artery **13** vessels to relevant landing zones within the aorta corresponding to a circular listing of measured torso extent lengths. More specifically, the first side **312** of the data-wheel **310** includes an inner row **318**, a middle row **320**, and an outer row **322**. The inner row **318** provides a circular listing of male torso extent lengths, e.g., in centimeters. The middle row **320** provides a circular listing of the thoracic aortic zone **137** lengths corresponding to the circular listing of male torso extent lengths; and the outer row **322** provides a circular listing of the infrarenal aortic zone **139** lengths also corresponding to the circular listing of male torso extent lengths. It will be understood by one of skill in the art that the first side **312** of the data-wheel **310** may alternatively provide listings of male safe zone venuous insertion lengths, for example. In addition, many other variations or combinations of correlation data between the measured torso extent length and new devices, different landing zones, and vessel sizes, for example, may also be provided on the data-wheel **310**.

Referring now to FIG. **18**, the second embodiment of the exemplary torso vascular insertion tool **300** is also illustrated, here with a cover **324** over the first side **312** of the data-wheel **310** of the tool **300**. After a user draws the tape **316** over a patient to measure the external measure of torso extent between the sternal notch **25** and the symphisis pubis **23** (FIG. **1**A), the cover **324** of the data-wheel **310** rotates to a value of the measured torso extent length displayed on the inner row **318** of the data-wheel **310**. The user is then able to compare the torso extent length measured or shown on the inner row **318** of the data-wheel to one or more of corresponding safe zones displayed on the middle row **320**, e.g., the thoracic aortic zone **137** insertion length, or the outer row **322**, e.g., the infrarenal aortic zone **139** insertion length of the data-wheel **310** to calculate a length to which the endovascular device is to be inserted.

The second side (not shown) of the data-wheel **310** may include a circular listing of female safe zone arterial insertion lengths from the femoral artery **13** vessels to relevant landing zones within the aorta. Such landing zones also include the

thoracic aortic zone **137**, the infrarenal aortic zone **139**, and the common iliac artery (CIA) zone **141**. The second side of the data-wheel **310** may alternatively include a circular listing of female safe zone venous insertion lengths from the femoral artery **13** vessels to relevant landing zones within the vena cava. Such landing zones include the retro-hepatic inferior vena cava (IVC) zone **143**, the infrarenal IVC zone **145**, and the common iliac vein (CIV) zone **147**.

Like the first side **312**, the second side of the data-wheel **310** and tape **316** combination of the second embodiment of the torso vascular insertion tool **300** may be easily expanded or changed to alternatively include various other correlation data between the measured torso extent length and new devices and vessels sizes, for example.

While various numerical indices and zones are included in the exemplary tool **300**, the tool **300** is also but one example; actual devices could use different numerical indices and zones than those provided in the exemplary tool **300** and still be within the scope of the appended claims.

Both embodiments of the torso vascular insertion tool **200**, **300** may also include calipers or rods to facilitate measuring depending upon a patient's shape. More specifically, in patients having larger abdominal areas, the calipers or rods are needed to provide an accurate linear measurement of the patient's torso extent length because the larger abdominal areas would otherwise impede an accurate measurement. For example, when the torso vascular insertion tools **200**, **300** are tape, and the tape is flexible and plastic, the caliper or rod may be disposed on one or both ends of the tape. The calipers or rods may also be retractable and extendible to help facilitate more accurate locating of externally-identifiable anatomic landmarks and measuring of the torso extent length in such patients.

While preferred embodiments of the present disclosure have been described above, variations may be made that are still within the scope of the appended claims.

What is claimed is:

1. A thoracic aortic occlusion system comprising:

an endovascular wire;

a balloon shaft comprising an aortic occlusion balloon on a distal end of the balloon shaft and a lumen to permit the balloon shaft to pass over the endovascular wire when the endovascular wire and the balloon shaft are inserted into a femoral artery at a femoral head of a patient; and

a nomogram comprising one of a table, chart or graph correlating distances between at least two external anatomical landmarks of each human of a pool of humans to centerline distances from the femoral artery at the femoral head to a location within a thoracic aorta of each of the humans, where a distance between at least two anatomical landmarks is measured on a patient and compared to the distances between the at least two external anatomical landmarks on the nomogram to calculate a length to which the endovascular wire and the balloon shaft are to be inserted in the patient such that the aortic occlusion balloon is positioned at a desired location within the thoracic aorta without using fluoroscopy.

2. The system of claim **1**, wherein the location within the thoracic aorta coincides with an aortic branch artery landmark.

3. The system of claim **1**, wherein the location within the thoracic aorta is inferior to the origin of the left subclavian artery.

4. A method for deploying and selectively inflating a thoracic aortic balloon at a desired location within a thoracic aorta of a patient, comprising:

measuring a distance between at least two readily externally identifiable anatomical landmarks of the patient, said anatomical landmarks including at least a symphysis pubis of the patient and a sternal notch of the patient;

comparing the distance between the at least two external anatomical landmarks of the patient to a prediction model and calculating a length to which a calibrated endovascular wire and a balloon shaft of the thoracic occlusion system are to be inserted in the patient, the prediction model having correlation data for distances between the at least two external anatomical landmarks of torso extent of a pool of humans to centerline distances from a femoral artery at a femoral head to a location within the thoracic aorta of humans, the data measured using CT imaging; and

inserting the calibrated endovascular wire and the balloon shaft to the length calculated for the patient independent of fluoroscopy.

5. The method of claim **4**, wherein the prediction model is one of a table, a chart, a graph, or a nomogram.

6. The method of claim **4**, wherein the method further includes pre-securing the balloon shaft to the endovascular wire proximate a trailing securement bead, allowing the balloon shaft and the endovascular wire to be inserted in the patient and delivered as a single unit.

* * * * *