US011868179B2

(12) **United States Patent**
**von Badinski et al.**

(10) **Patent No.: US 11,868,179 B2**
(45) **Date of Patent: Jan. 9, 2024**

(54) **WEARABLE COMPUTING DEVICE**

(71) Applicant: **Ouraring Inc.**, San Francisco, CA (US)

(72) Inventors: **Curt C. von Badinski**, Valencia, CA (US); **Michael J. Strasser**, San Francisco, CA (US); **Peter Twiss**, Lakewood, CA (US)

(73) Assignee: **Ouraring, Inc.**, San Francisco, CA (US)

( * ) Notice: Subject to any disclaimer, the term of this patent is extended or adjusted under 35 U.S.C. 154(b) by 0 days.

(21) Appl. No.: **18/323,386**

(22) Filed: **May 24, 2023**

(65) **Prior Publication Data**

US 2023/0376072 A1 Nov. 23, 2023

**Related U.S. Application Data**

(60) Continuation of application No. 18/179,272, filed on Mar. 6, 2023, which is a continuation of application

(Continued)

(51) **Int. Cl.**
***G08G 1/14*** (2006.01)
***G06F 1/16*** (2006.01)

(Continued)

(52) **U.S. Cl.**
CPC ..... ***G06F 1/163*** (2013.01); ***A61B 5/01*** (2013.01); ***A61B 5/021*** (2013.01); ***A61B 5/0205*** (2013.01);

(Continued)

(58) **Field of Classification Search**
CPC ..... G08G 1/142
See application file for complete search history.

(56) **References Cited**

U.S. PATENT DOCUMENTS

1,589,547 A 6/1926 Novack
2,048,878 A 7/1936 Moldenhauer

(Continued)

FOREIGN PATENT DOCUMENTS

CN 103109462 A 5/2013
CN 103441306 A 12/2013

(Continued)

OTHER PUBLICATIONS

Samedayflash, "Set of 10 2GB/4GB/8GB/16GB Wooden Bamboo Flash Drive—Bulk Pack O USB 2.0 Wood Bamboo Stick Design—Wood USB Flash Drive", www.etsy.com/listing/248051205/set-of-10-2gb4gb8gb16gb-wooden-bamboo?ref+m, Jun. 2, 2016, Publisher: Etsy, Published in: US.

(Continued)

*Primary Examiner* — Travis R Hunnings
(74) *Attorney, Agent, or Firm* — Holland & Hart LLP

(57) **ABSTRACT**

A smart ring includes a curved housing having a U-shape interior storing components including: a curved battery approximately conforming to the curved housing, a semi-flexible PCB approximately conforming to the curved housing and having mounted thereon: a motion sensor for generating motion data from physical perturbations of the smart ring, a memory for storing executable instructions, a transceiver for sending data to a client computer, a temperature sensor, and a processor for receiving motion data and performing executable instructions in response thereto, and a potting material disposed in the interior, forming an interior wall of the smart ring, wherein the potting material encapsulates the components and is substantially transparent to visible light, infrared light, and/or ultraviolet light.

**16 Claims, 64 Drawing Sheets**

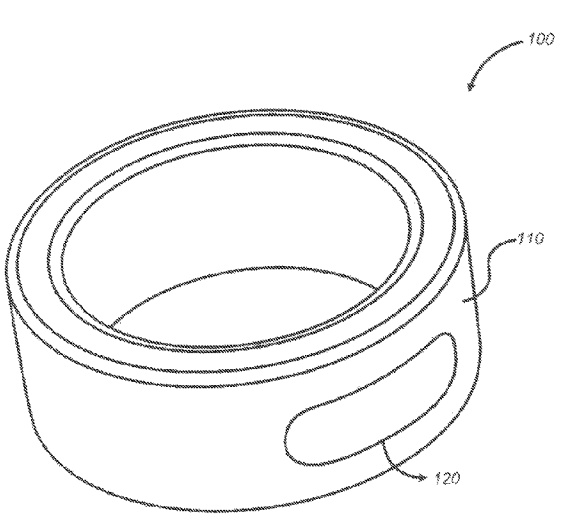


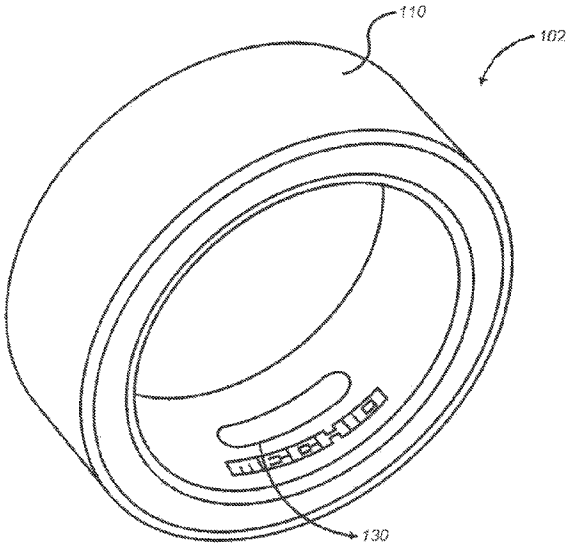

**Related U.S. Application Data**

No. 17/519,201, filed on Nov. 4, 2021, now Pat. No. 11,599,147, which is a continuation of application No. 17/013,348, filed on Sep. 4, 2020, now Pat. No. 11,188,124, which is a continuation of application No. 16/224,686, filed on Dec. 18, 2018, now Pat. No. 10,768,666, which is a division of application No. 15/444,217, filed on Feb. 27, 2017, now Pat. No. 10,156,867, which is a division of application No. 14/556,062, filed on Nov. 28, 2014, now Pat. No. 9,582,034.

(60) Provisional application No. 62/006,835, filed on Jun. 2, 2014, provisional application No. 61/910,201, filed on Nov. 29, 2013.

(51) **Int. Cl.**

| | |
|---|---|
| ***A61B 5/00*** | (2006.01) |
| ***H02J 7/35*** | (2006.01) |
| ***A61B 5/332*** | (2021.01) |
| ***A61B 5/349*** | (2021.01) |
| ***G06V 40/10*** | (2022.01) |
| ***G06V 40/70*** | (2022.01) |
| ***G06V 10/75*** | (2022.01) |
| ***G01P 15/00*** | (2006.01) |
| ***G04G 21/02*** | (2010.01) |
| ***G06F 3/01*** | (2006.01) |
| ***G08B 21/02*** | (2006.01) |
| ***G08C 17/02*** | (2006.01) |
| ***G06F 3/14*** | (2006.01) |
| ***G08B 5/36*** | (2006.01) |
| ***H02J 7/00*** | (2006.01) |
| ***H02S 40/22*** | (2014.01) |
| ***G02B 19/00*** | (2006.01) |
| ***H02S 99/00*** | (2014.01) |
| ***A61B 5/01*** | (2006.01) |
| ***A61B 5/021*** | (2006.01) |
| ***A61B 5/024*** | (2006.01) |
| ***A61B 5/11*** | (2006.01) |
| ***A61B 5/145*** | (2006.01) |
| ***A61B 5/1455*** | (2006.01) |
| ***G06F 21/32*** | (2013.01) |
| ***A61B 5/0205*** | (2006.01) |

(52) **U.S. Cl.**

CPC ..... ***A61B 5/02416*** (2013.01); ***A61B 5/1118*** (2013.01); ***A61B 5/1455*** (2013.01); ***A61B 5/14532*** (2013.01); ***A61B 5/332*** (2021.01); ***A61B 5/349*** (2021.01); ***A61B 5/681*** (2013.01); ***A61B 5/6826*** (2013.01); ***G01P 15/00*** (2013.01); ***G02B 19/0052*** (2013.01); ***G02B 19/0061*** (2013.01); ***G04G 21/02*** (2013.01); ***G04G 21/025*** (2013.01); ***G06F 1/1635*** (2013.01); ***G06F 3/014*** (2013.01); ***G06F 3/017*** (2013.01); ***G06F 3/14*** (2013.01); ***G06F 21/32*** (2013.01); ***G06V 10/751*** (2022.01); ***G06V 40/10*** (2022.01); ***G06V 40/70*** (2022.01); ***G08B 5/36*** (2013.01); ***G08B 21/02*** (2013.01); ***G08C 17/02*** (2013.01); ***H02J 7/0044*** (2013.01); ***H02J 7/35*** (2013.01); ***H02S 40/22*** (2014.12); ***H02S 99/00*** (2013.01); *A61B 2560/0214* (2013.01); *A61B 2560/0412* (2013.01); *A61B 2562/146* (2013.01); *A61B 2562/164* (2013.01); *A61B 2562/166* (2013.01); *G02B 19/0042* (2013.01); *G06V 40/15* (2022.01); *G08C 2201/30* (2013.01); *Y02E 10/52* (2013.01)

(56) **References Cited**

U.S. PATENT DOCUMENTS


| | | | |
|---|---|---|---|
| 3,022,648 | A | 2/1962 | Thaler |
| 3,653,051 | A | 3/1972 | Wu |
| 3,684,125 | A | 8/1972 | Laurizio |
| 4,407,295 | A | 8/1983 | Steuer et al. |
| 4,541,207 | A | 9/1985 | Antonson |
| 5,191,891 | A | 3/1993 | Righter |
| 5,382,778 | A | 1/1995 | Takahira et al. |
| 5,490,523 | A | 2/1996 | Isaacson et al. |
| 5,832,296 | A | 11/1998 | Wang et al. |
| 5,964,701 | A | 10/1999 | Asada et al. |
| 6,101,843 | A | 8/2000 | Nagano |
| 6,255,800 | B1 | 7/2001 | Bork |
| 6,277,079 | B1 | 8/2001 | Avicola et al. |
| 6,495,283 | B1 | 12/2002 | Yoon et al. |
| 6,502,906 | B1 | 1/2003 | Chen |
| 6,546,749 | B1 | 4/2003 | Canty |
| 6,608,562 | B1 | 8/2003 | Kimura et al. |
| 7,161,484 | B2 | 1/2007 | Tsoukalis |
| 7,374,540 | B2 | 5/2008 | Schnall |
| 7,375,494 | B2 | 5/2008 | Daniel et al. |
| 7,427,979 | B2 | 9/2008 | Park et al. |
| 7,444,001 | B2 | 10/2008 | Roberts et al. |
| 7,517,222 | B2 | 4/2009 | Rohrbach et al. |
| 7,526,927 | B2 | 5/2009 | Pinto |
| 7,555,327 | B2 | 6/2009 | Matlock |
| 7,637,746 | B2 | 12/2009 | Lindberg et al. |
| 7,733,224 | B2 | 6/2010 | Tran |
| 8,157,161 | B2 | 4/2012 | Yach |
| 8,157,731 | B2 | 4/2012 | Teller et al. |
| 8,270,914 | B2 | 9/2012 | Pascolini et al. |
| 8,346,327 | B2 | 1/2013 | Campbell et al. |
| 8,373,656 | B2 | 2/2013 | Hou et al. |
| 8,421,748 | B2 | 4/2013 | Tanaka |
| 8,457,654 | B1 | 6/2013 | Roskind |
| 8,515,506 | B2 | 8/2013 | Ridder et al. |
| 8,554,297 | B2 | 10/2013 | Moon et al. |
| 8,570,372 | B2 | 10/2013 | Russell |
| 8,583,167 | B2 | 11/2013 | Chun |
| 8,599,572 | B2 | 12/2013 | Neudecker et al. |
| 8,626,249 | B2 | 1/2014 | Ungari et al. |
| 8,638,190 | B1 | 1/2014 | Want et al. |
| 8,888,720 | B2 | 11/2014 | Hudson |
| 8,954,135 | B2 | 2/2015 | Yuen et al. |
| 9,076,589 | B2 | 7/2015 | Wright et al. |
| 9,110,505 | B2 | 8/2015 | Mastandrea, Jr. |
| 9,113,793 | B2 | 8/2015 | Terumoto et al. |
| 9,148,717 | B2 | 9/2015 | Shaffer |
| 9,197,270 | B2 | 11/2015 | Ying et al. |
| 9,203,463 | B2 | 12/2015 | Asrani et al. |
| 9,311,825 | B2 | 4/2016 | Lusted et al. |
| 9,313,609 | B2 | 4/2016 | Prencipe |
| 9,335,790 | B2 | 5/2016 | Stoller |
| 9,345,404 | B2 | 5/2016 | Proud |
| 9,414,125 | B2 | 8/2016 | Ferren et al. |
| 9,582,034 | B2 * | 2/2017 | von Badinski ..... A61B 5/349 |
| 9,734,477 | B2 | 8/2017 | Weast et al. |
| 9,788,789 | B2 | 10/2017 | Bailey |
| 9,958,904 | B2 * | 5/2018 | von Badinski ..... A61B 5/6826 |
| 10,082,829 | B2 * | 9/2018 | Kuwabara ..... G06F 1/1643 |
| 10,085,689 | B1 | 10/2018 | Giuffrida et al. |
| 10,126,779 | B2 * | 11/2018 | von Badinski ..... A61B 5/1455 |
| 10,139,859 | B2 * | 11/2018 | von Badinski ..... G06F 1/163 |
| 10,156,867 | B2 * | 12/2018 | von Badinski ..... G06F 3/014 |
| 10,219,709 | B2 | 3/2019 | Basu |
| 10,281,953 | B2 * | 5/2019 | Von Badinski ..... A61B 5/7264 |
| 10,331,168 | B2 * | 6/2019 | von Badinski ..... G08B 5/36 |
| 10,496,131 | B2 * | 12/2019 | von Badinski ..... G08C 17/02 |
| 10,579,099 | B2 * | 3/2020 | Wang ..... G06F 1/163 |
| 10,729,388 | B2 | 8/2020 | Reihman et al. |
| 10,768,666 | B2 * | 9/2020 | von Badinski ..... G08B 5/36 |
| 10,863,802 | B2 * | 12/2020 | McLear ..... G06K 19/07749 |
| 10,884,455 | B2 * | 1/2021 | von Badinski ..... A61B 5/6806 |
| 10,901,460 | B2 * | 1/2021 | von Badinski ..... A61B 5/6826 |
| 11,188,124 | B2 * | 11/2021 | von Badinski ..... A61B 5/0205 |
| 11,262,795 | B2 * | 3/2022 | Kuwabara ..... G04B 19/00 |

(56) **References Cited**

U.S. PATENT DOCUMENTS

| | | | | |
|---|---|---|---|---|
| 11,324,292 | B2 * | 5/2022 | Min | G06F 1/16 |
| 11,360,558 | B2 * | 6/2022 | Wang | G06T 19/006 |
| 11,360,587 | B1 * | 6/2022 | Wang | G06F 3/016 |
| 11,599,147 | B2 * | 3/2023 | von Badinski | A61B 5/349 |
| 2002/0156352 | A1 | 10/2002 | Eggers | |
| 2003/0142065 | A1 | 7/2003 | Pahlavan | |
| 2005/0038348 | A1 | 2/2005 | Avicola et al. | |
| 2005/0189906 | A1 | 9/2005 | Sun | |
| 2006/0046709 | A1 | 3/2006 | Krumm et al. | |
| 2006/0055517 | A1 * | 3/2006 | Ghabra | H01Q 7/00 340/426.11 |
| 2006/0142968 | A1 | 6/2006 | Han et al. | |
| 2006/0202618 | A1 | 9/2006 | Ishii et al. | |
| 2007/0100218 | A1 | 5/2007 | Sweitzer et al. | |
| 2007/0100666 | A1 | 5/2007 | Stivoric | |
| 2007/0123756 | A1 | 5/2007 | Kitajima et al. | |
| 2008/0045806 | A1 | 2/2008 | Keppler | |
| 2008/0048036 | A1 | 2/2008 | Matsumoto et al. | |
| 2008/0266118 | A1 | 10/2008 | Pierson et al. | |
| 2009/0306485 | A1 | 12/2009 | Bell | |
| 2010/0100004 | A1 | 4/2010 | van Someren | |
| 2010/0156624 | A1 | 6/2010 | Hounsell | |
| 2010/0168531 | A1 | 7/2010 | Shaltis et al. | |
| 2010/0298677 | A1 | 11/2010 | Lu et al. | |
| 2011/0038511 | A1 | 2/2011 | Takiguchi | |
| 2011/0057901 | A1 | 3/2011 | Raty et al. | |
| 2011/0070480 | A1 | 3/2011 | Hahn et al. | |
| 2011/0312311 | A1 | 12/2011 | Abifaker et al. | |
| 2012/0016793 | A1 | 1/2012 | Peters et al. | |
| 2012/0130203 | A1 | 5/2012 | Stergiou et al. | |
| 2012/0218184 | A1 | 8/2012 | Wissmar | |
| 2012/0220835 | A1 | 8/2012 | Chung | |
| 2012/0254809 | A1 | 10/2012 | Yang et al. | |
| 2012/0293107 | A1 | 11/2012 | Ajagbe | |
| 2012/0317024 | A1 | 12/2012 | Rahman et al. | |
| 2013/0027341 | A1 * | 1/2013 | Mastandrea | G06F 3/038 345/173 |
| 2013/0044215 | A1 | 2/2013 | Rothkopf et al. | |
| 2013/0069583 | A1 | 3/2013 | Lemelman et al. | |
| 2013/0088186 | A1 | 4/2013 | Hsieth | |
| 2013/0106603 | A1 * | 5/2013 | Weast | G06F 1/163 340/539.11 |
| 2013/0108907 | A1 | 5/2013 | Bhardwaj et al. | |
| 2013/0131519 | A1 | 5/2013 | Leboeuf | |
| 2013/0144176 | A1 | 6/2013 | Lec | |
| 2013/0167221 | A1 | 6/2013 | Vukoszavl et al. | |
| 2013/0217326 | A1 | 6/2013 | Symons | |
| 2013/0191789 | A1 | 7/2013 | Calman et al. | |
| 2013/0226486 | A1 | 8/2013 | Henderson et al. | |
| 2013/0163326 | A1 | 10/2013 | Hunter et al. | |
| 2013/0261771 | A1 | 10/2013 | Ten Kate | |
| 2013/0271069 | A1 | 10/2013 | Partovi | |
| 2013/0332286 | A1 | 12/2013 | Medelius et al. | |
| 2014/0065956 | A1 | 3/2014 | Yang et al. | |
| 2014/0102136 | A1 | 4/2014 | Warren | |
| 2014/0230019 | A1 * | 8/2014 | Civelli | G06F 21/35 726/4 |
| 2015/0037616 | A1 | 2/2015 | Wyatt et al. | |
| 2015/0177559 | A1 | 10/2015 | Vescovi et al. | |
| 2015/0277559 | A1 * | 10/2015 | Vescovi | G06F 3/017 345/173 |
| 2015/0303722 | A1 | 10/2015 | Li | |
| 2015/0327809 | A1 | 11/2015 | Tateda et al. | |
| 2015/0342468 | A1 | 12/2015 | Semler et al. | |
| 2015/0349556 | A1 | 12/2015 | Mercando et al. | |
| 2015/0380961 | A1 | 12/2015 | Tseng et al. | |
| 2016/0013602 | A1 | 1/2016 | Strisower et al. | |
| 2017/0006414 | A1 | 1/2017 | Tomassini | |

FOREIGN PATENT DOCUMENTS

| | | | |
|---|---|---|---|
| CN | 204440426 | U | 7/2015 |
| CN | 204732935 | U | 10/2015 |
| DE | 202006000119 | U1 | 4/2006 |
| EP | 2660680 | A1 | 11/2013 |
| FR | 2767384 | B3 | 8/1997 |
| JP | 2003275192 | | 9/2003 |
| KR | 200417885 | Y1 | 3/2006 |
| KR | 20100091592 | A | 8/2010 |
| WO | WO-2004078028 | A2 | 9/2004 |
| WO | WO-2006060949 | A1 | 6/2006 |
| WO | WO-2009079461 | A | 6/2009 |
| WO | WO-2009124076 | A1 | 10/2009 |
| WO | WO-2011053235 | A1 | 5/2011 |
| WO | WO-2012024889 | A1 | 3/2012 |
| WO | WO-2013093638 | A2 | 6/2013 |
| WO | WO-2013104629 | A1 | 7/2013 |
| WO | WO-2013163326 | A1 | 10/2013 |

OTHER PUBLICATIONS

Medical Mood Ring—Anonymous—Technology Review; Apr. 2004; 107, 3; ProQuest p. 18.

* cited by examiner

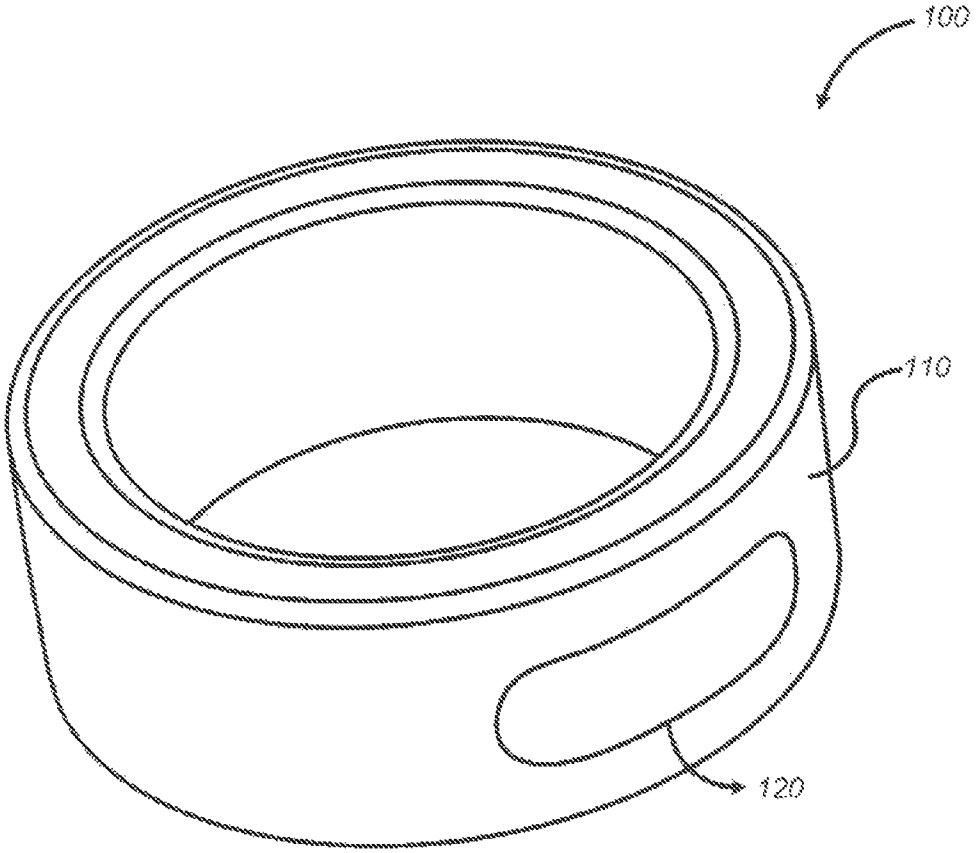


FIG. 1A

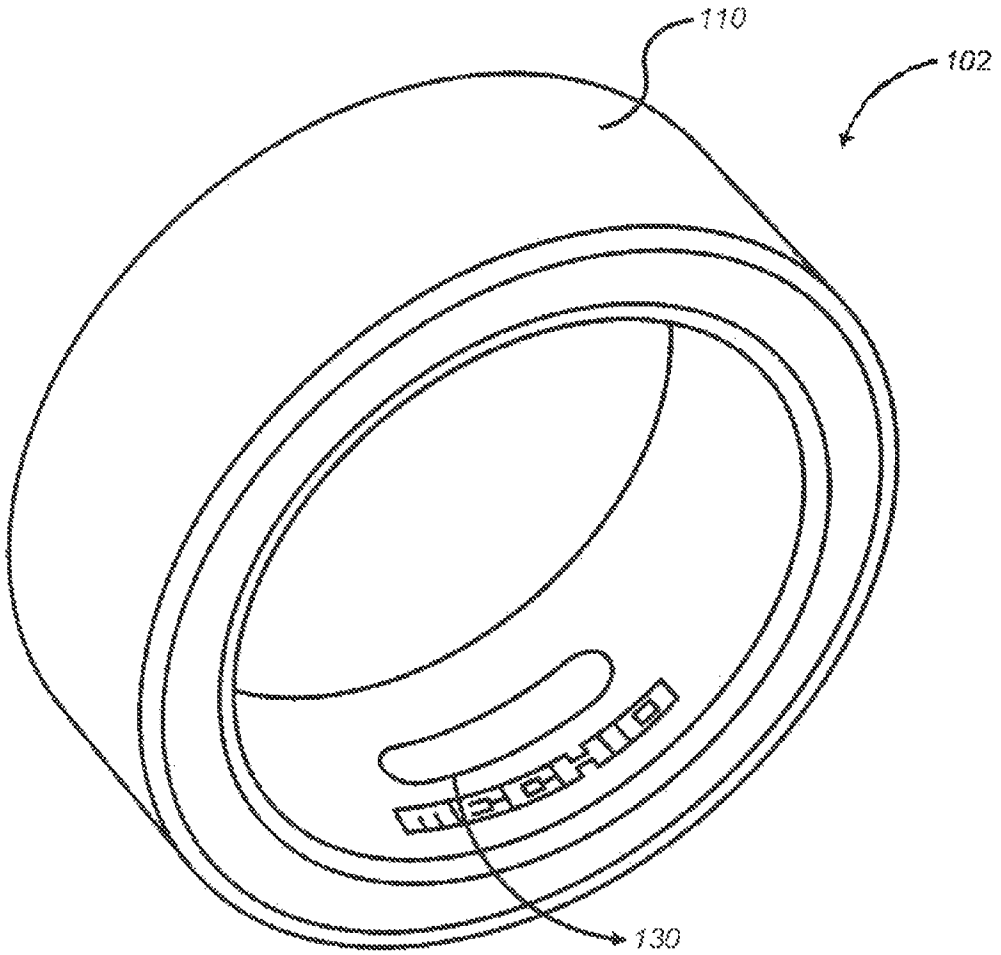


FIG. 1B

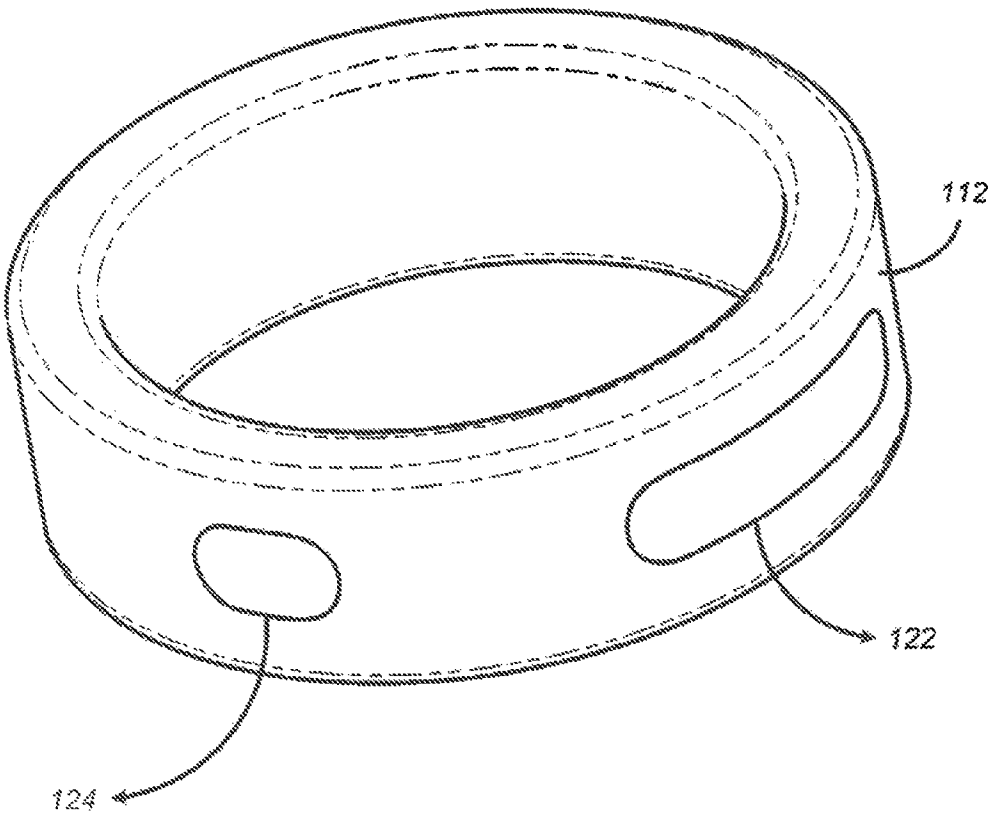


FIG. 1C

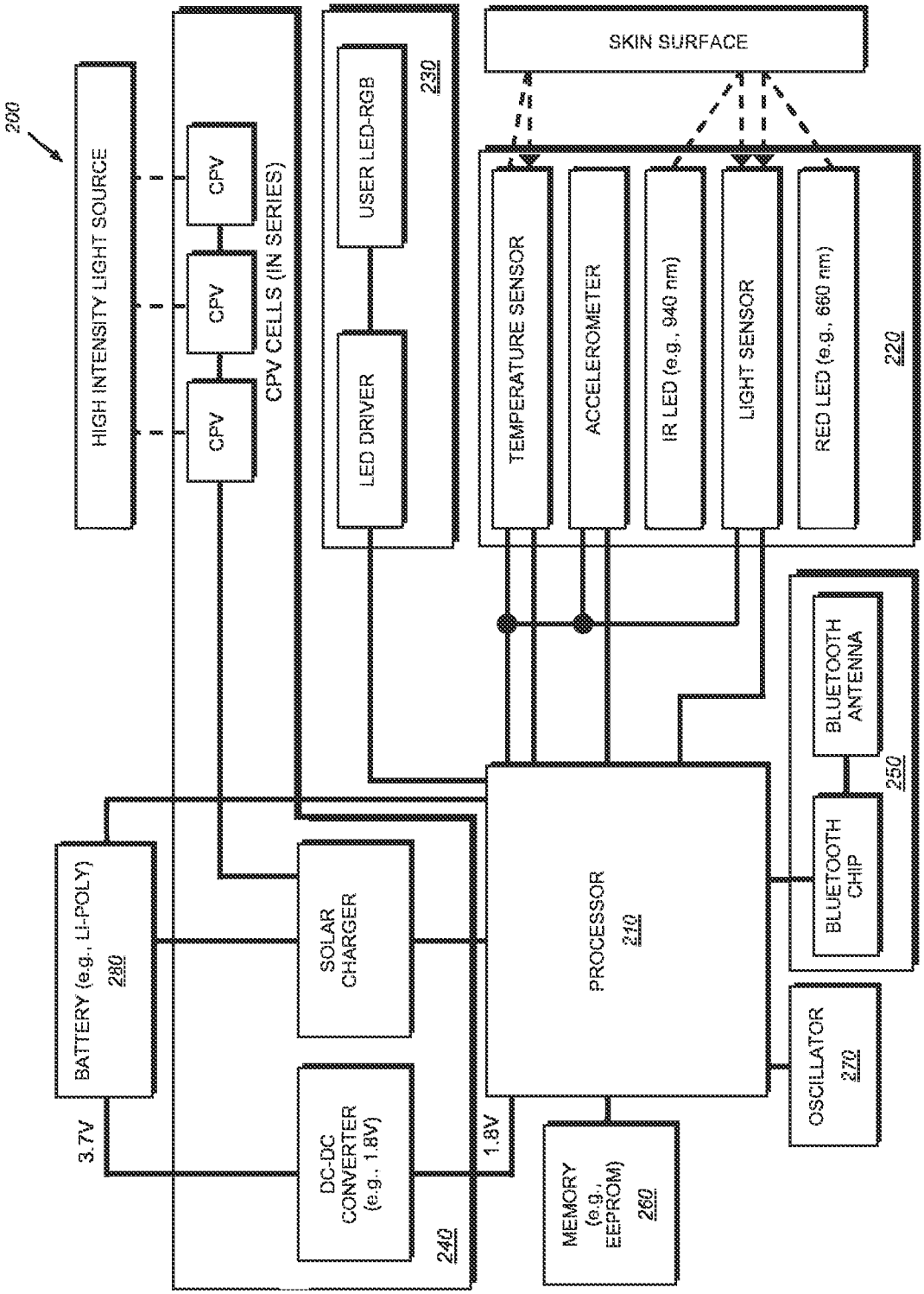
200
HIGH INTENSITY LIGHT SOURCE
CPV
CPV
CPV
CPV CELLS (IN SERIES)
USER LED-RGB
LED DRIVER
230
SKIN SURFACE
TEMPERATURE SENSOR
ACCELEROMETER
IR LED (e.g., 940 nm)
LIGHT SENSOR
RED LED (e.g., 660 nm)
220
BLUETOOTH ANTENNA
BLUETOOTH CHIP
250
BATTERY (e.g., LI-POLY)
280
SOLAR CHARGER
PROCESSOR
210
OSCILLATOR
270
3.7V
DC-DC CONVERTER (e.g., 1.8V)
240
1.8V
MEMORY (e.g., EEPROM)
260

FIG. 2

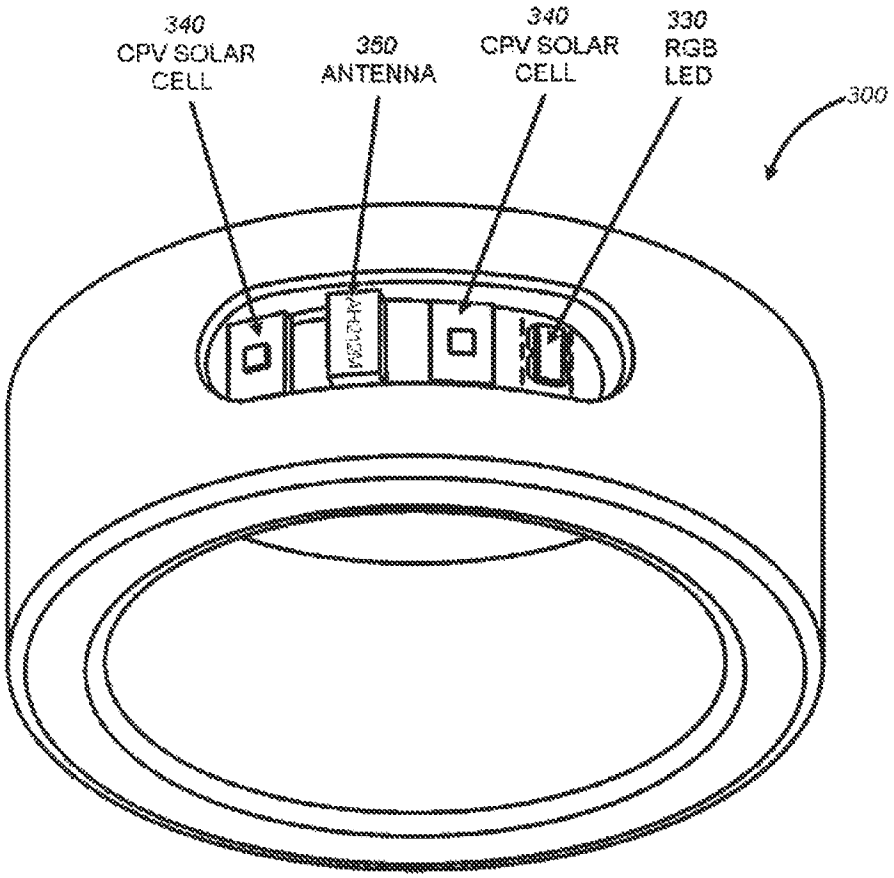
340
CPV SOLAR
CELL
350
ANTENNA
340
CPV SOLAR
CELL
330
RGB
LED
300

FIG. 3A

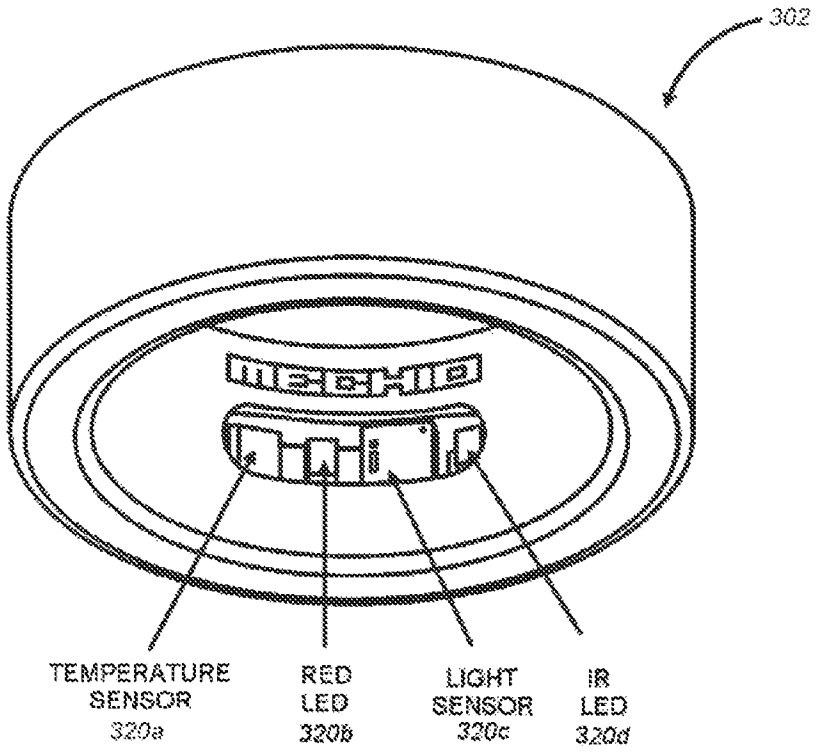
302
TEMPERATURE SENSOR 320a
RED LED 320b
LIGHT SENSOR 320c
IR LED 320d

FIG. 3B

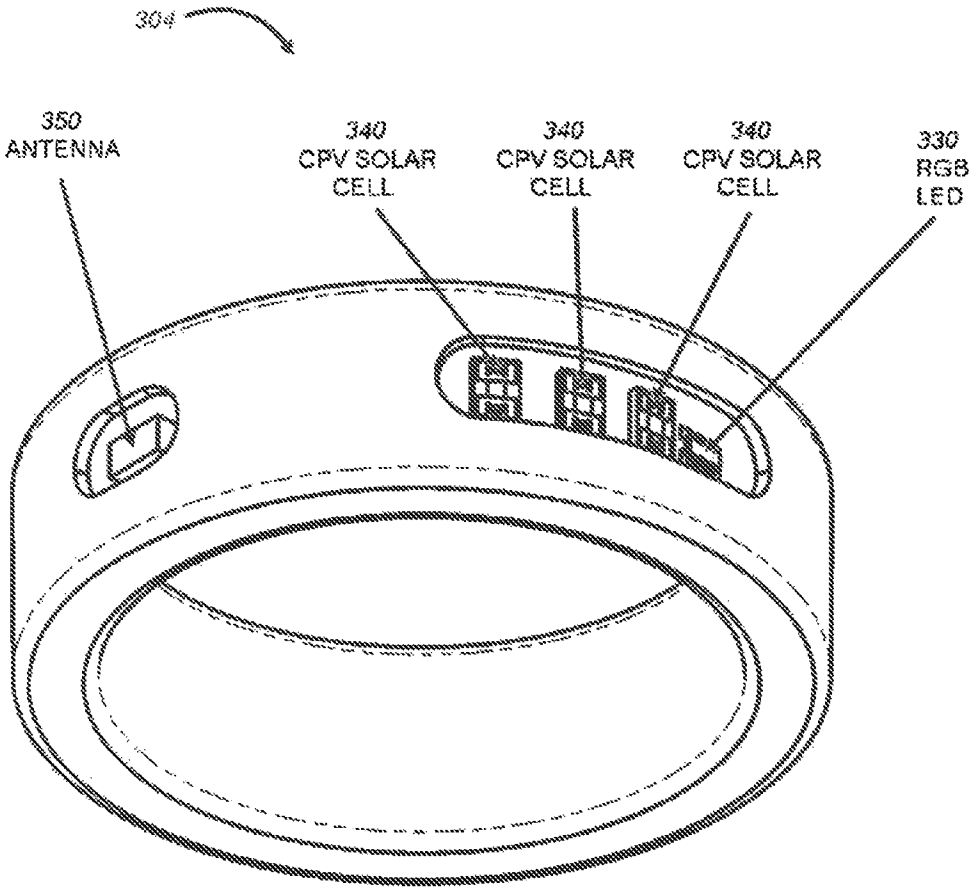
304
350
ANTENNA
340
CPV SOLAR
CELL
340
CPV SOLAR
CELL
340
CPV SOLAR
CELL
330
RGB
LED

FIG. 3C

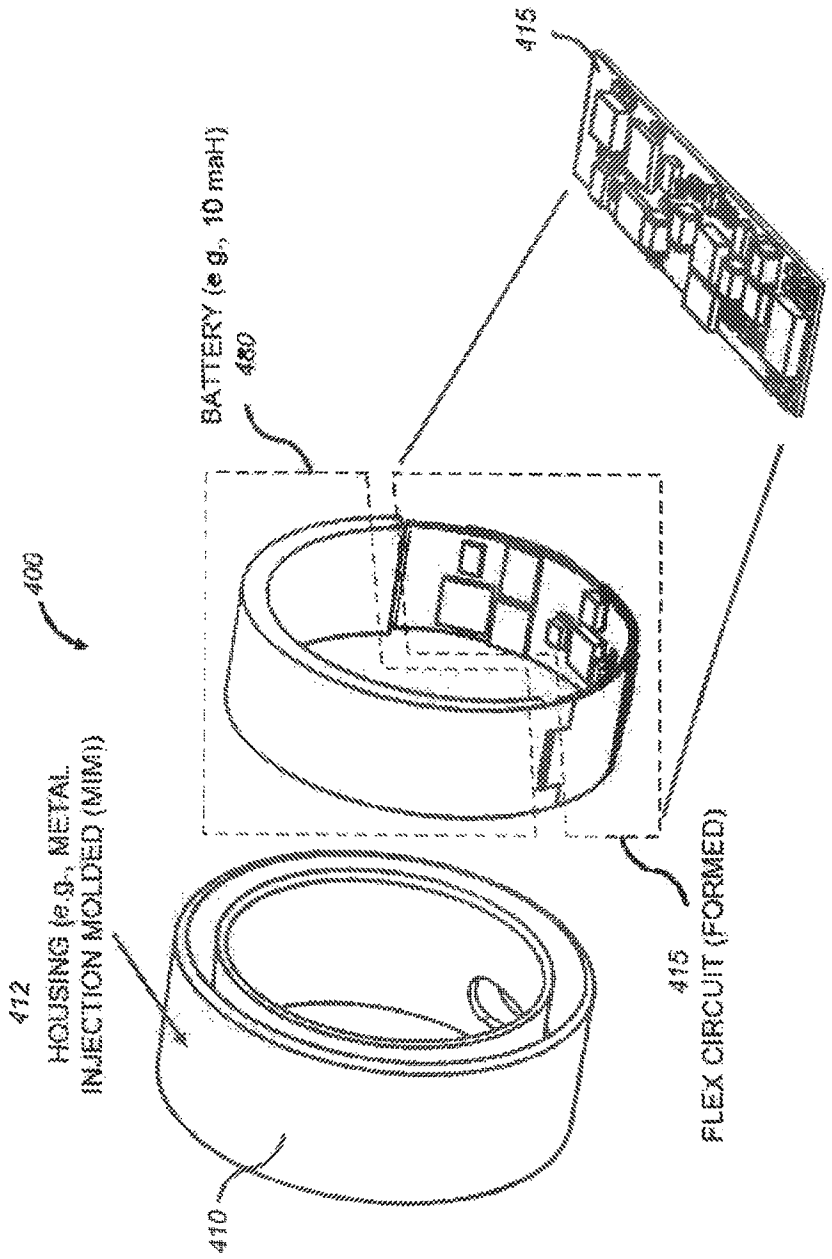
400
412
HOUSING (e.g., METAL INJECTION MOLDED (MIM))
410
BATTERY (e.g., 10 maH)
480
415
FLEX CIRCUIT (FORMED)
415

FIG. 4

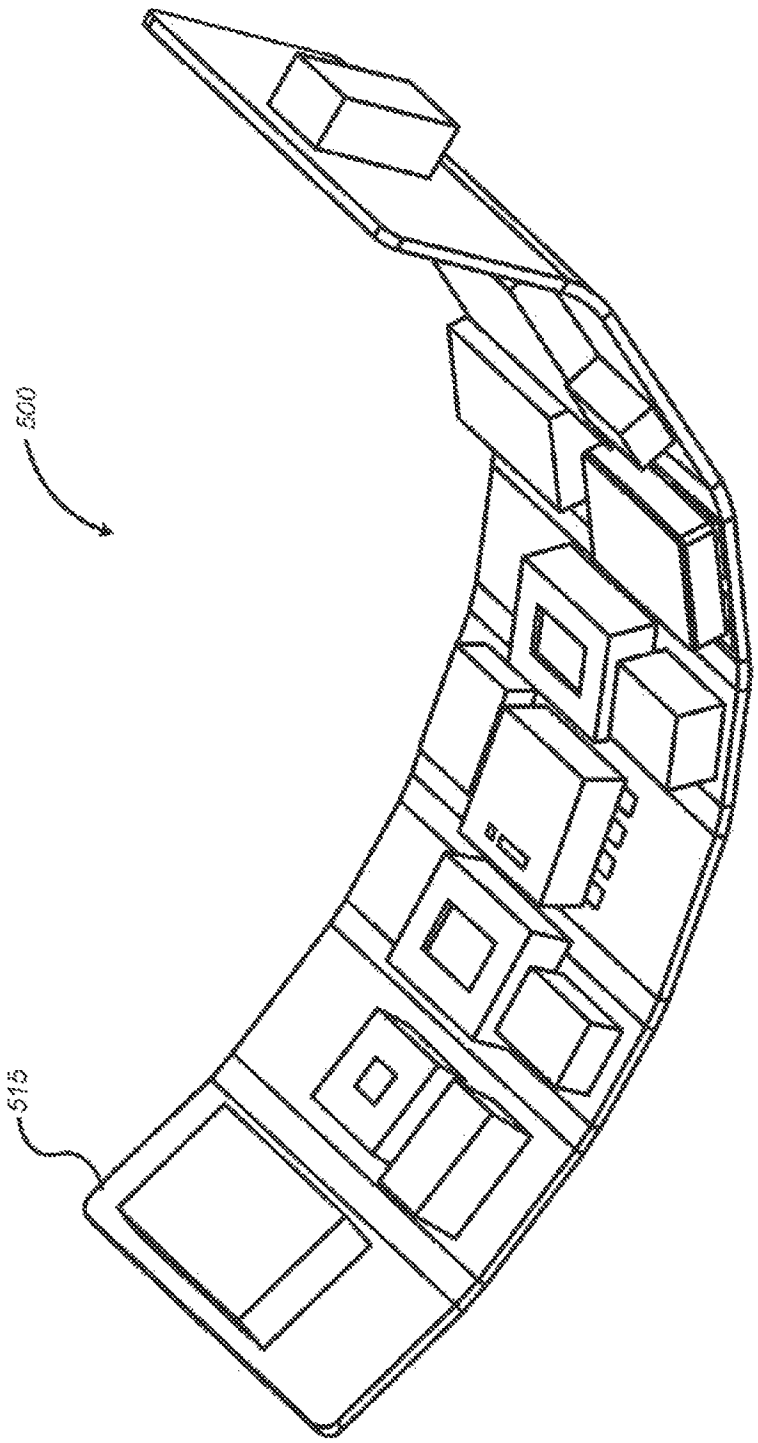


FIG. 5

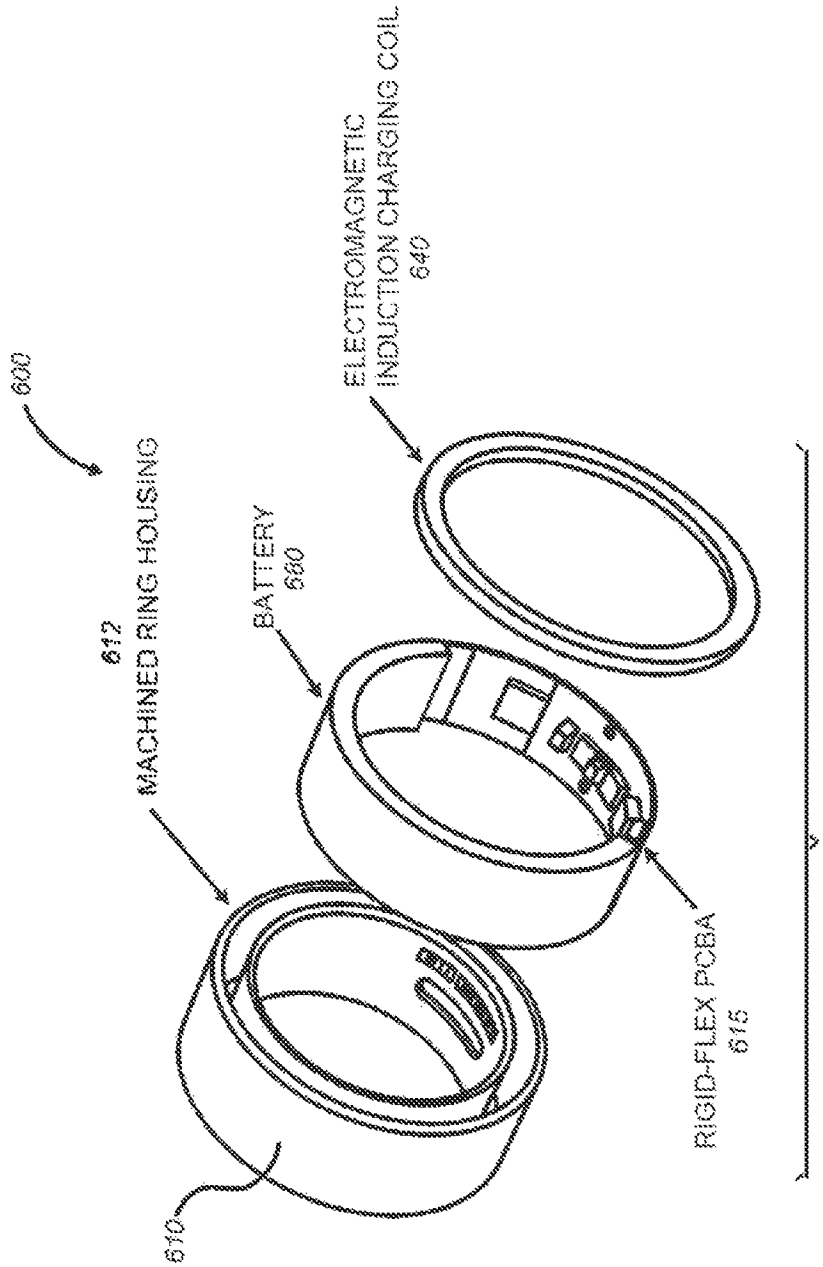
600
612
MACHINED RING HOUSING
610
BATTERY
660
ELECTROMAGNETIC
INDUCTION CHARGING COIL
640
RIGID-FLEX PCBA
615

FIG. 6

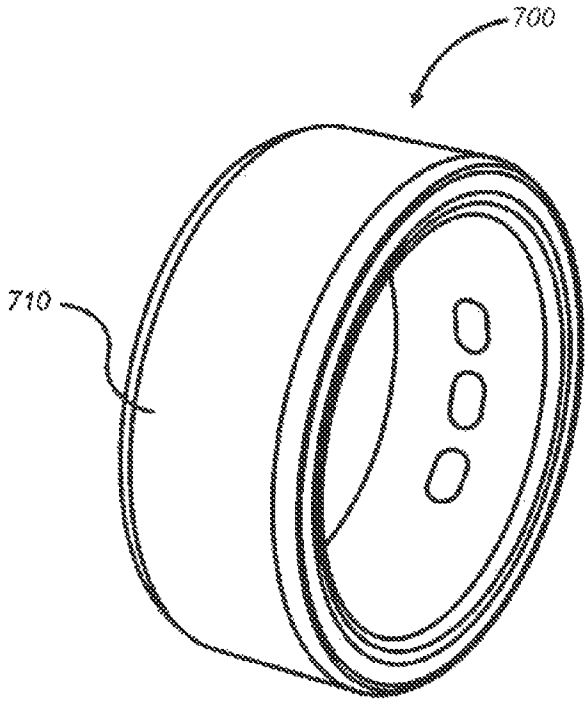


FIG. 7

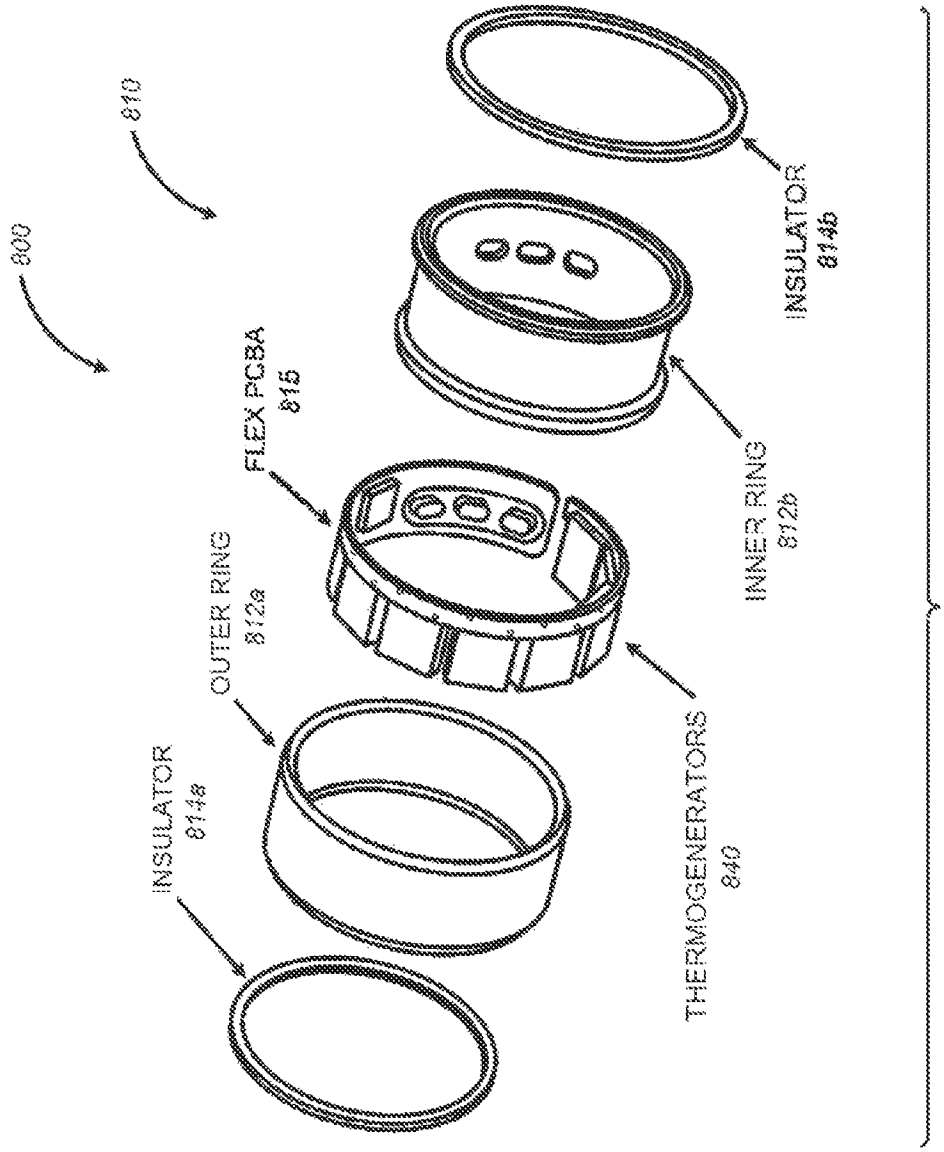
800
810
INSULATOR
814a
OUTER RING
812a
FLEX PCBA
815
THERMOGENERATORS
840
INNER RING
812b
INSULATOR
814b

FIG. 8

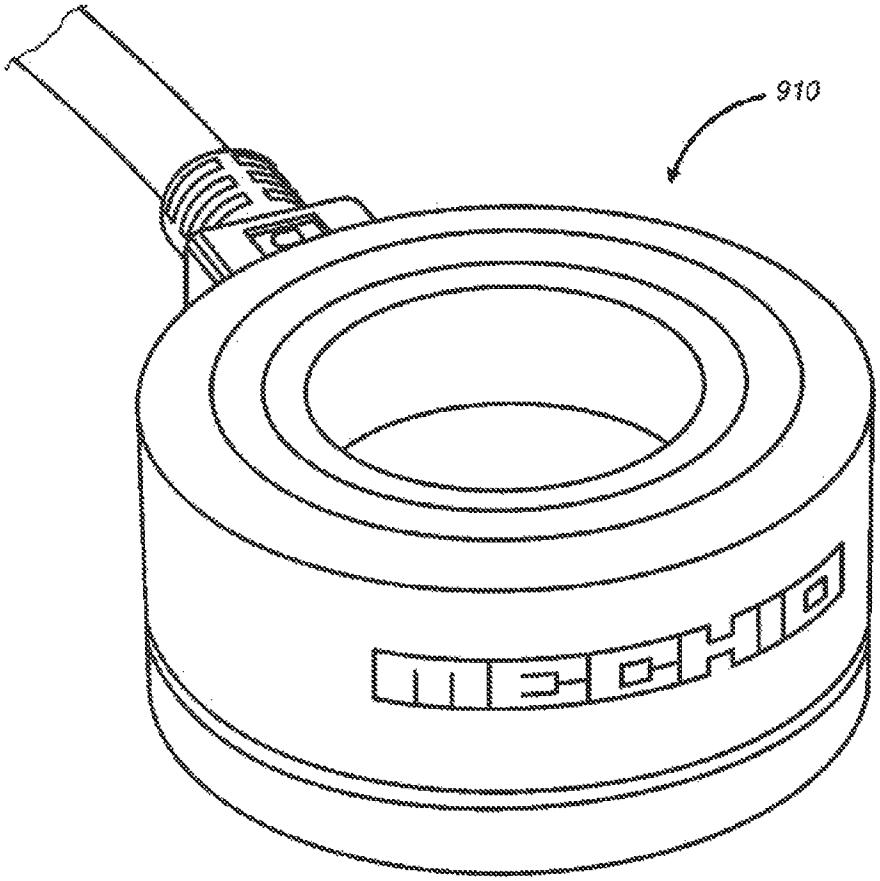


FIG. 9A

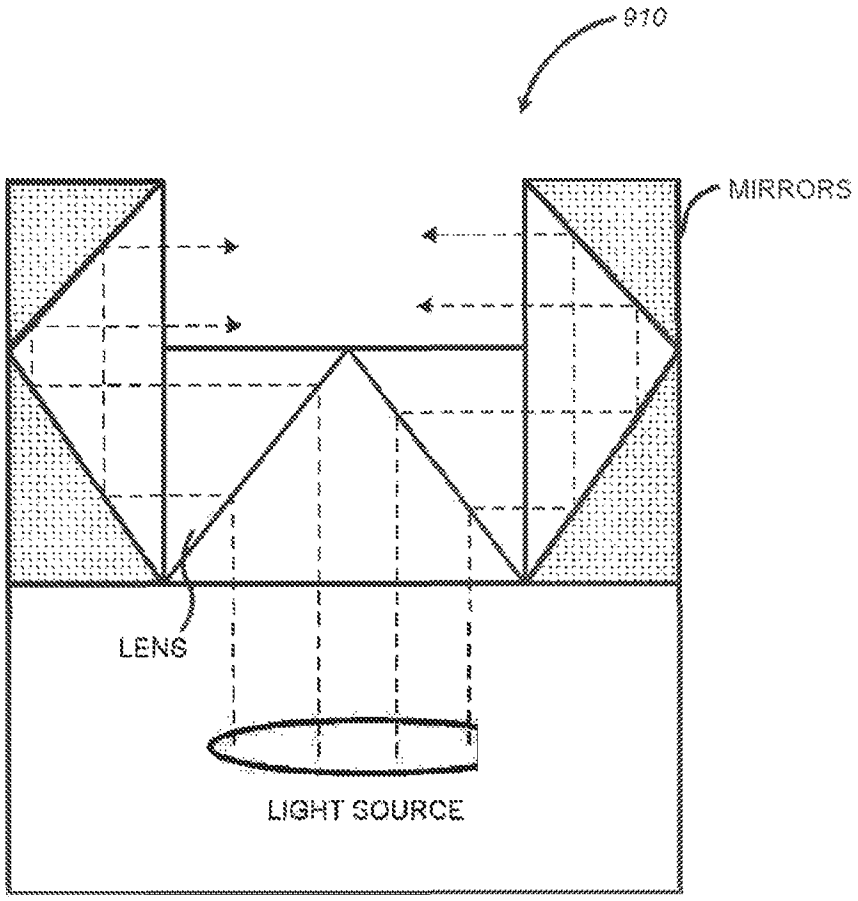


FIG. 9B

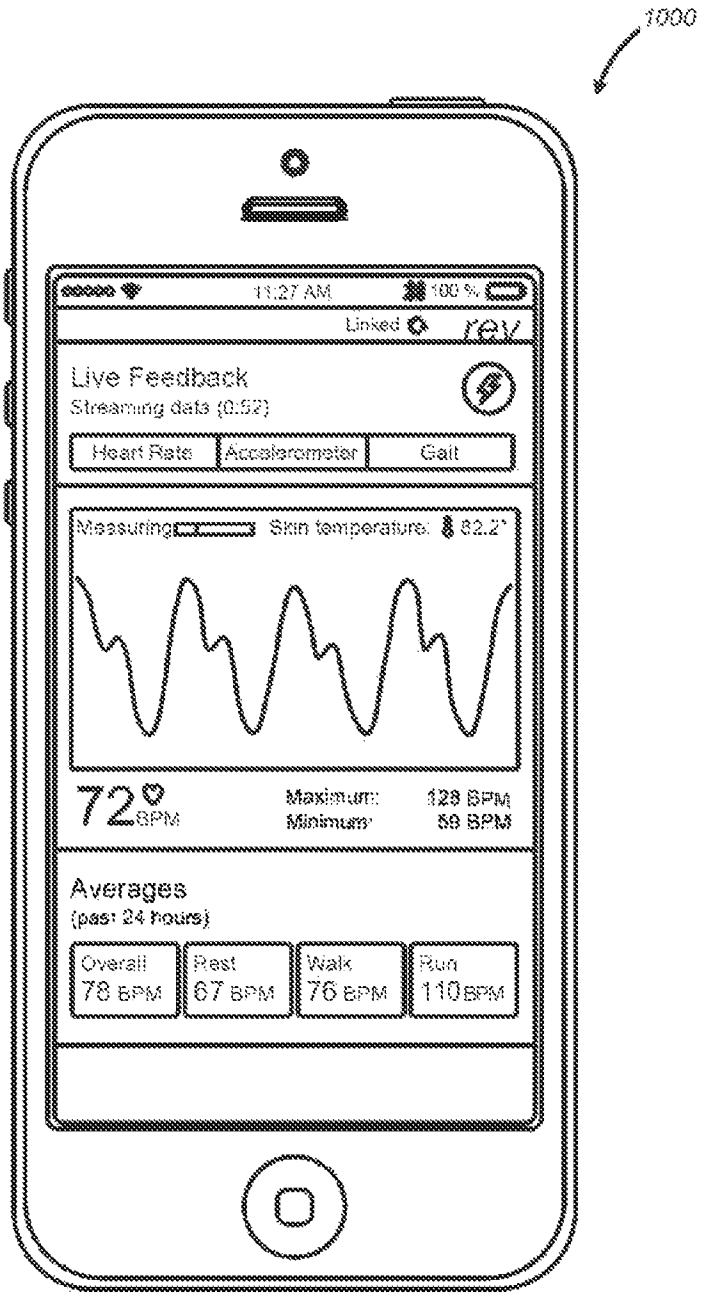
1000
11:27 AM
100 %
Linked
rev
Live Feedback
Streaming data (0:52)
Heart Rate
Accelerometer
Gait
Measuring
Skin temperature: 82.2°
72
BPM
Maximum: 128 BPM
Minimum: 59 BPM
Averages
(past 24 hours)
Overall
78 BPM
Rest
67 BPM
Walk
76 BPM
Run
110 BPM

FIG. 10

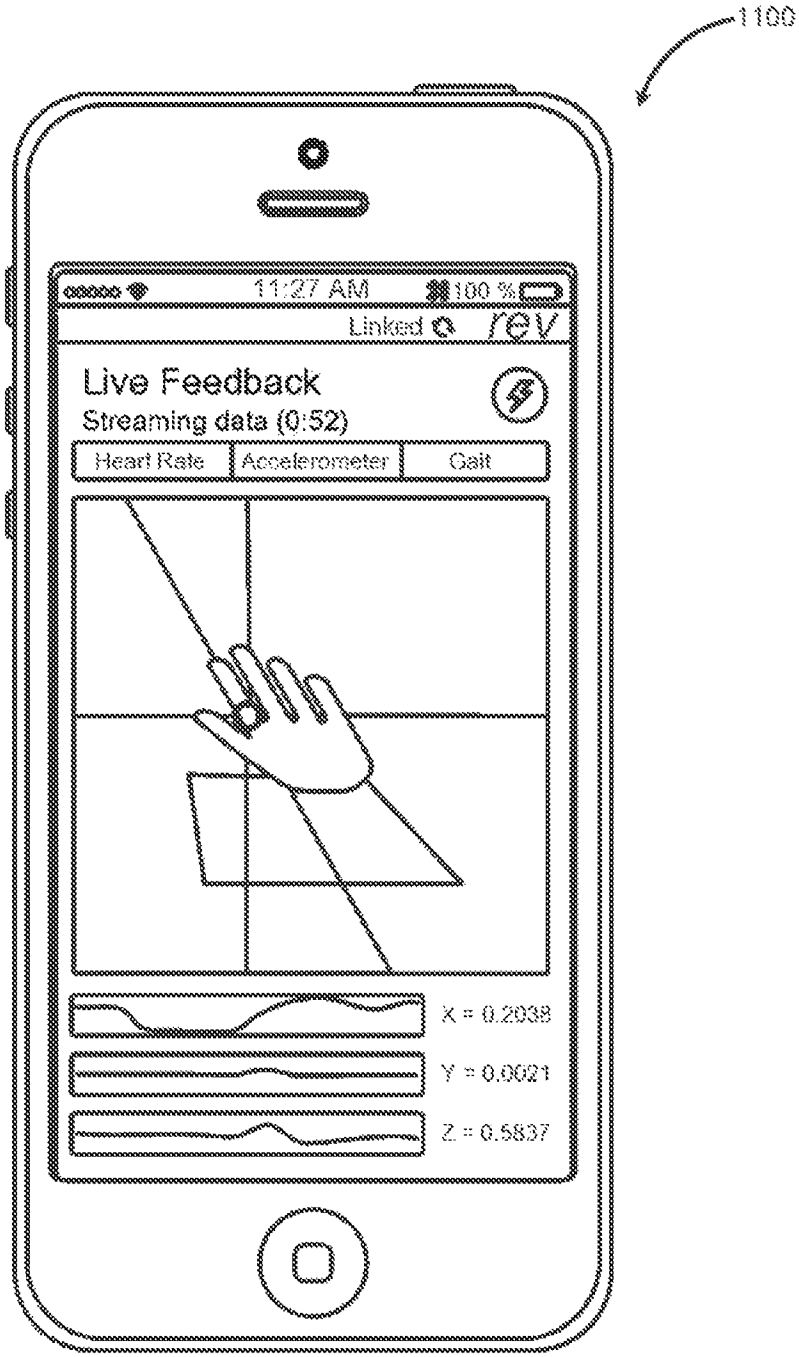
1100
11:27 AM
100 %
Linked
rev
Live Feedback
Streaming data (0:52)
Heart Rate
Accelerometer
Gait
X = 0.2038
Y = 0.0021
Z = 0.5837

FIG. 11

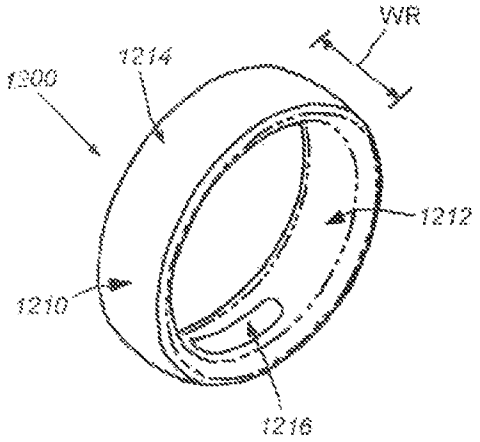


FIG. 12A

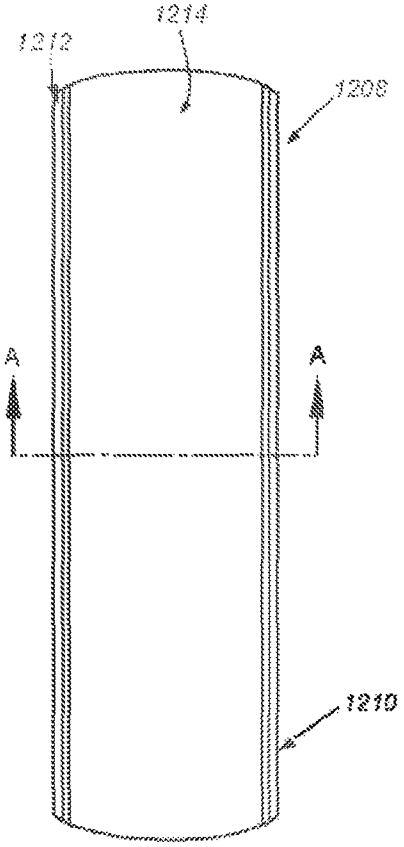


FIG. 12C

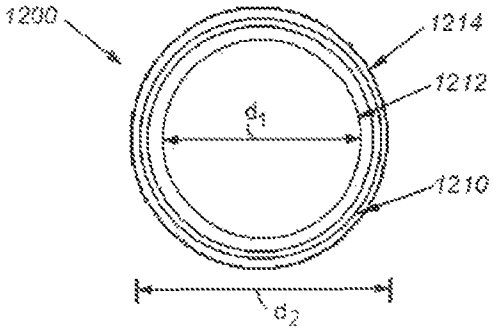


FIG. 12B

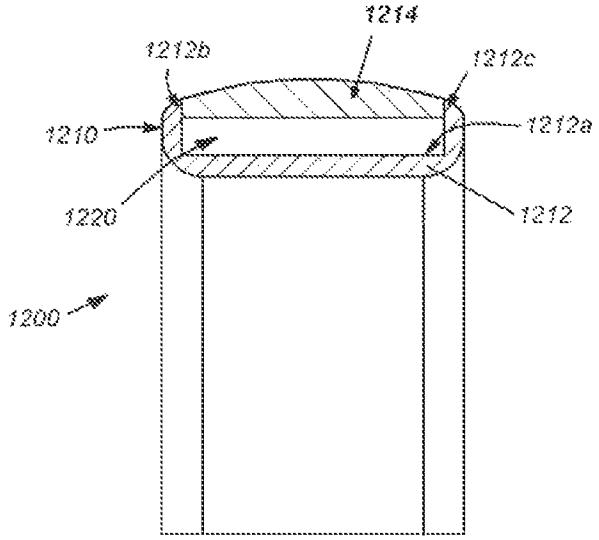


FIG. 12D

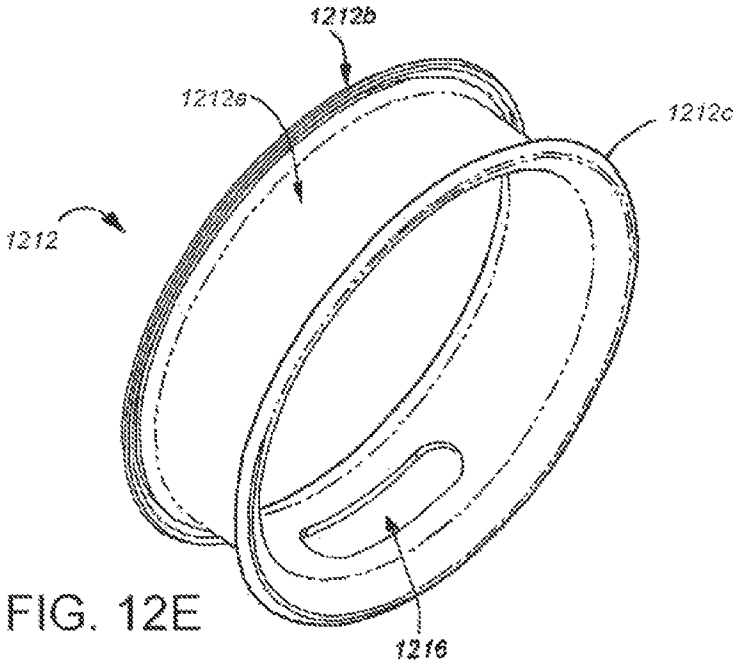


FIG. 12E

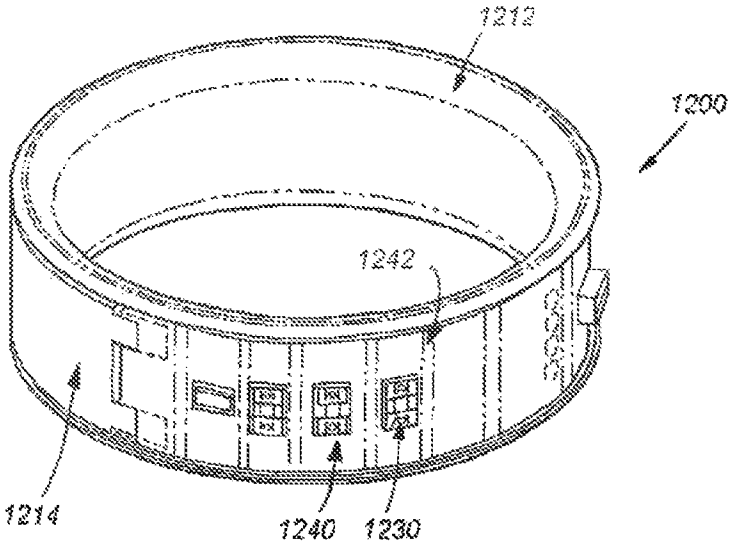


FIG. 12F

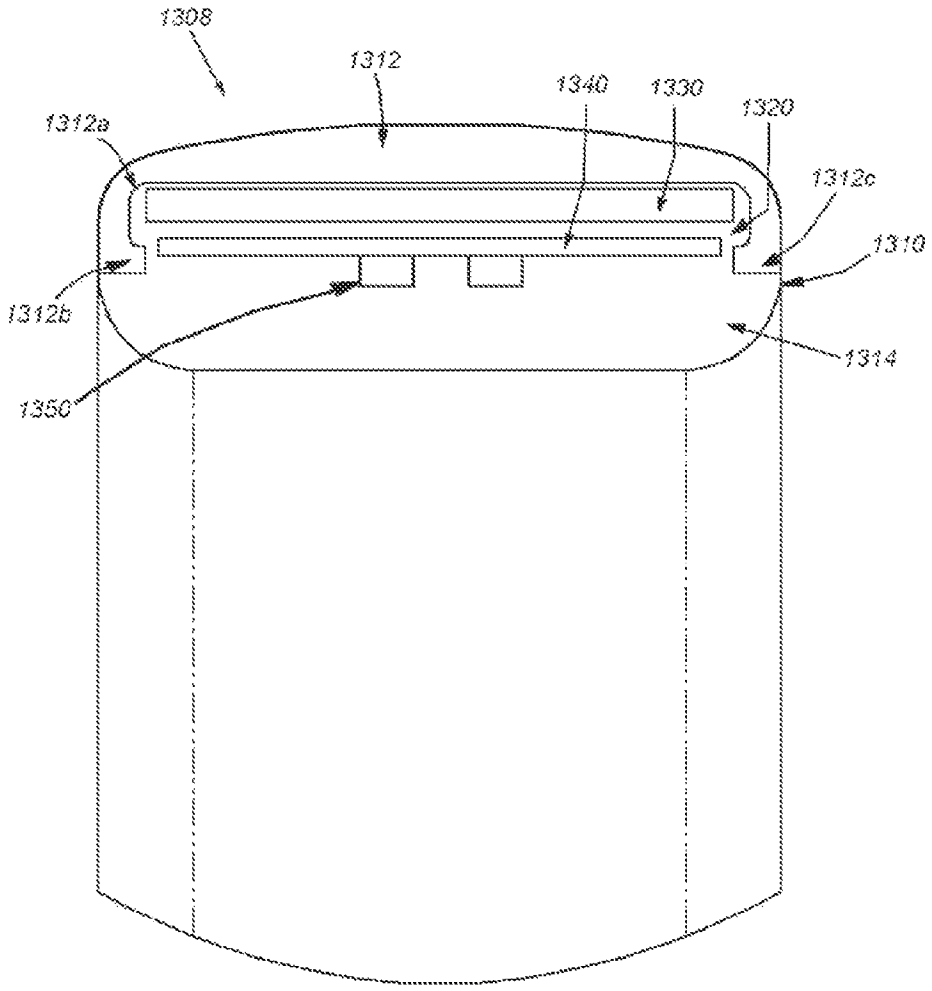


FIG. 13

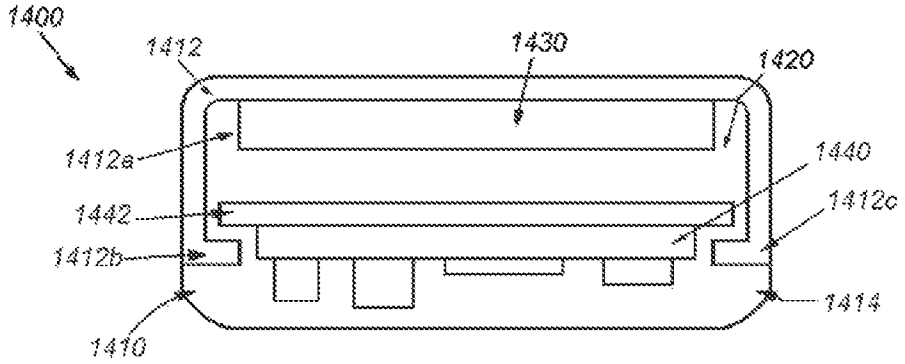


FIG. 14A

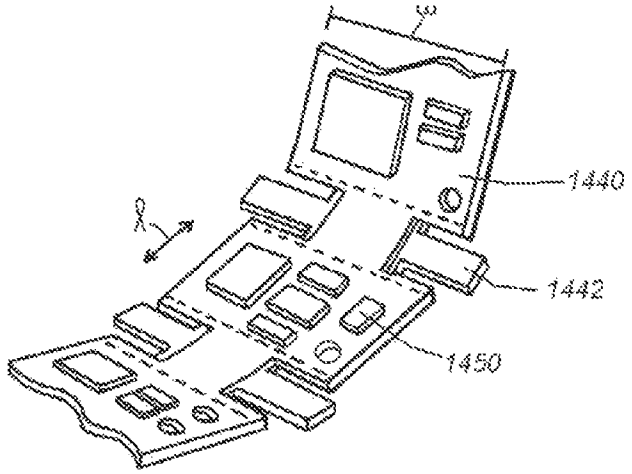


FIG. 14B

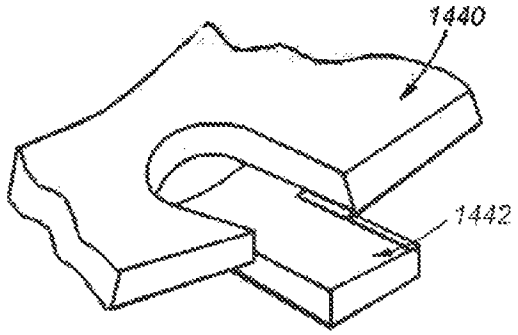


FIG. 14C

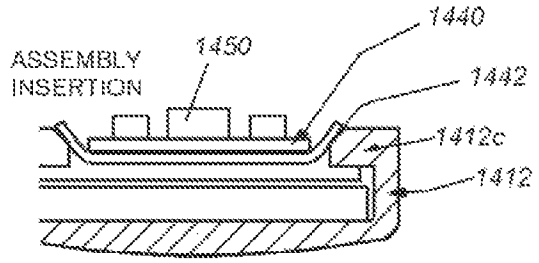


FIG. 14D

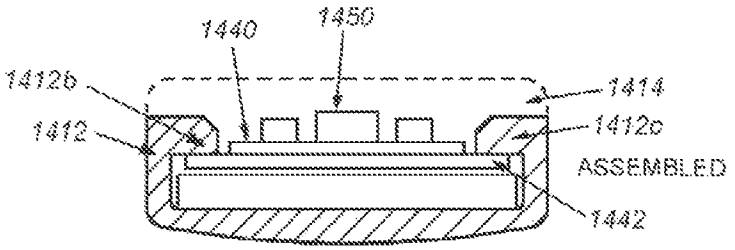


FIG. 14E

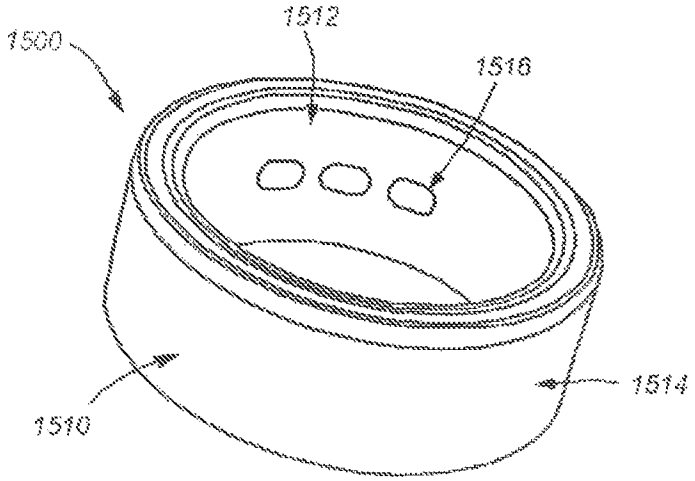


FIG. 15A

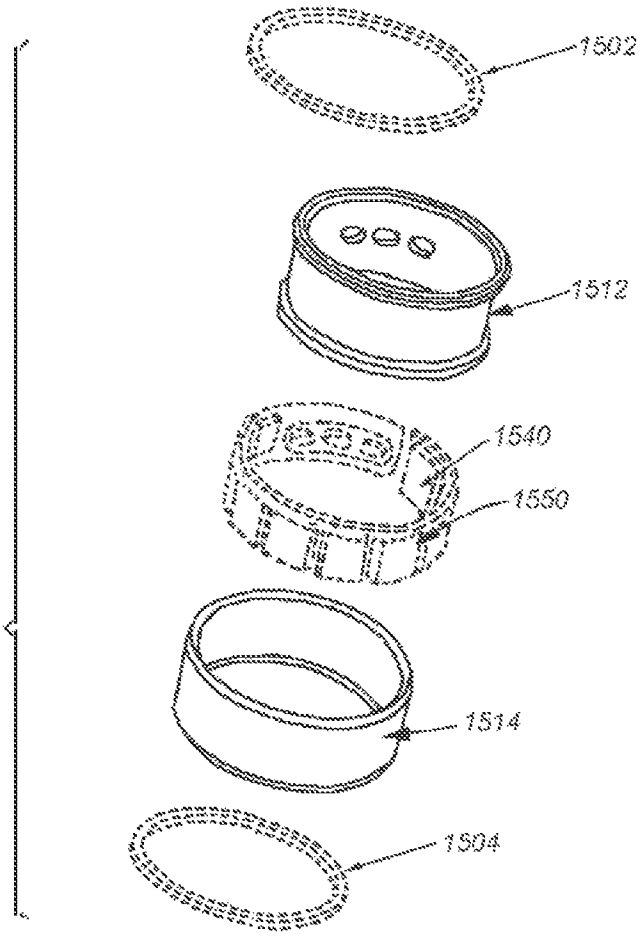


FIG. 15B

FIG. 16A

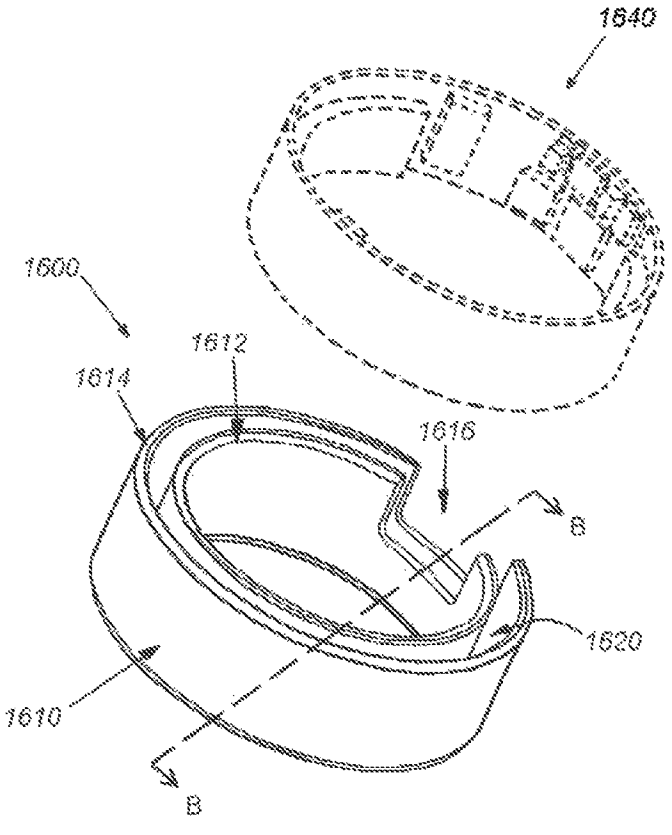

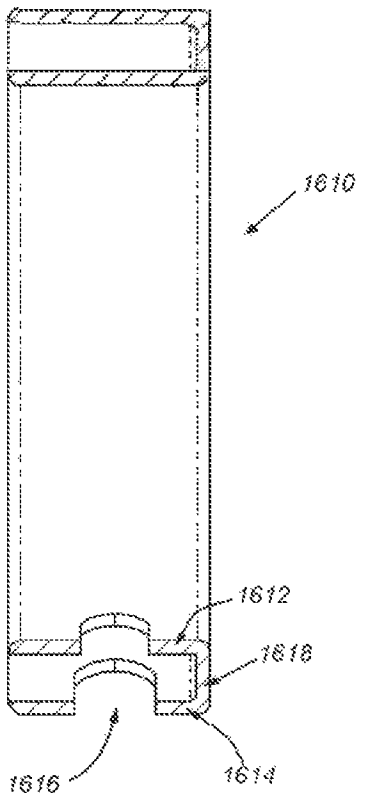


FIG. 16B

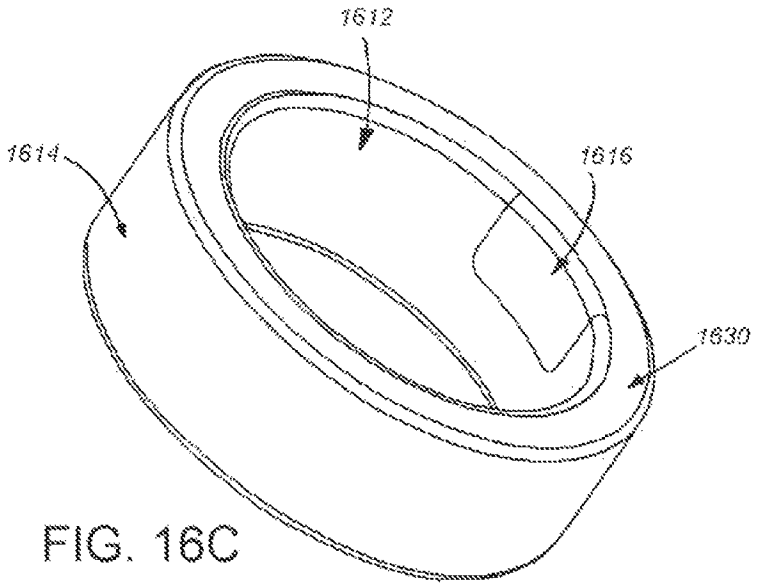


FIG. 16C

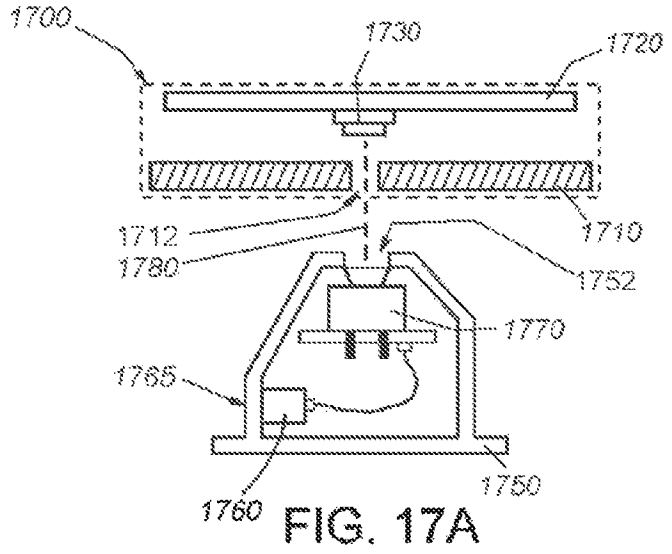


FIG. 17A

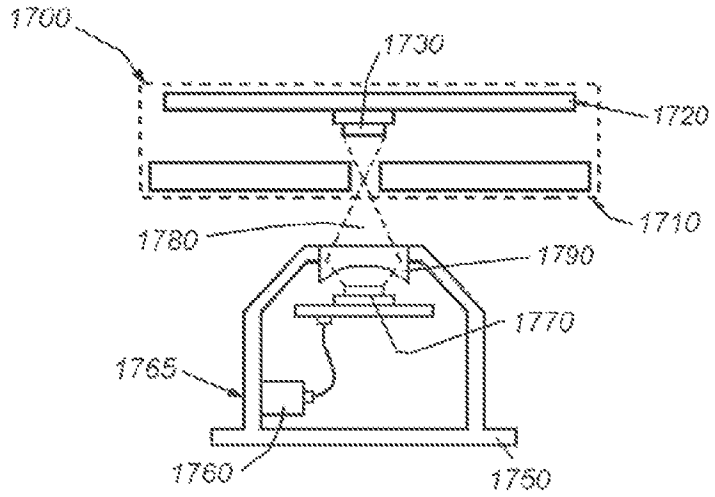


FIG. 17B

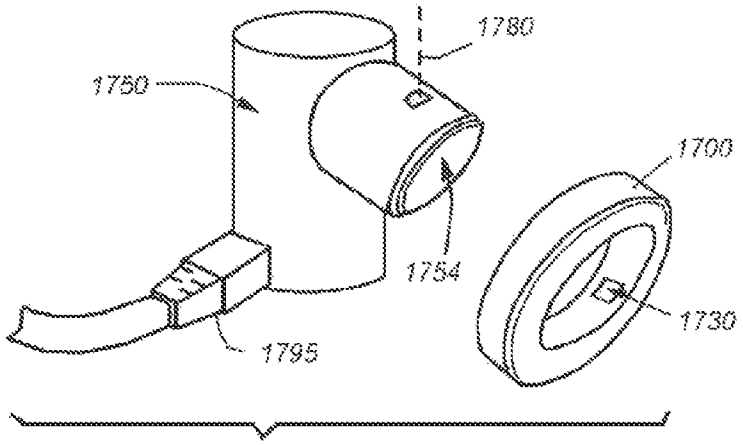


FIG. 17C

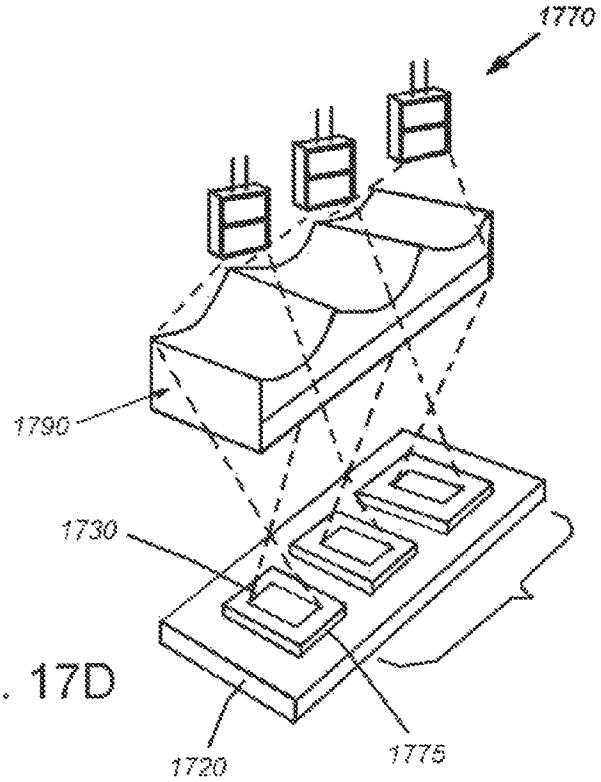


FIG. 17D

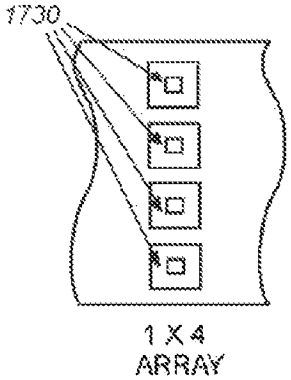


FIG. 17E

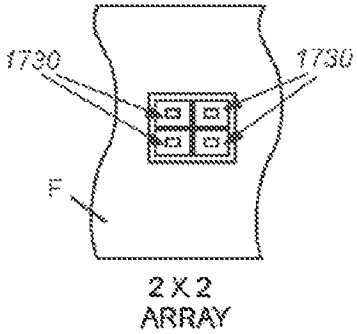


FIG. 17F

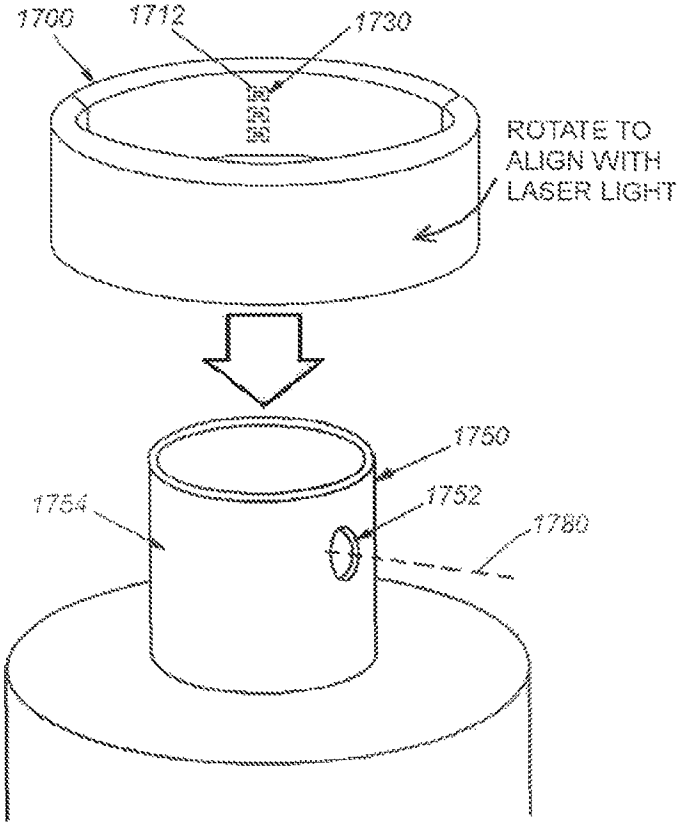


FIG. 17G

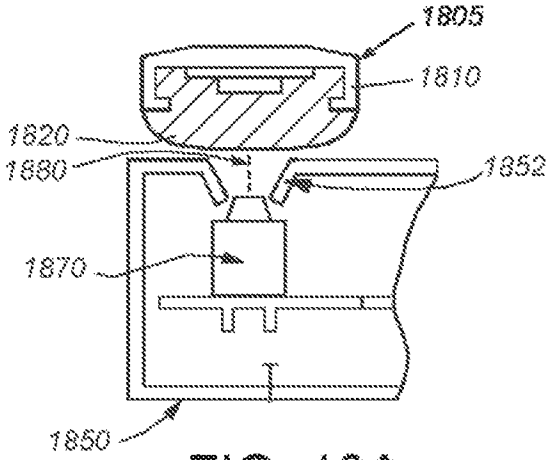


FIG. 18A

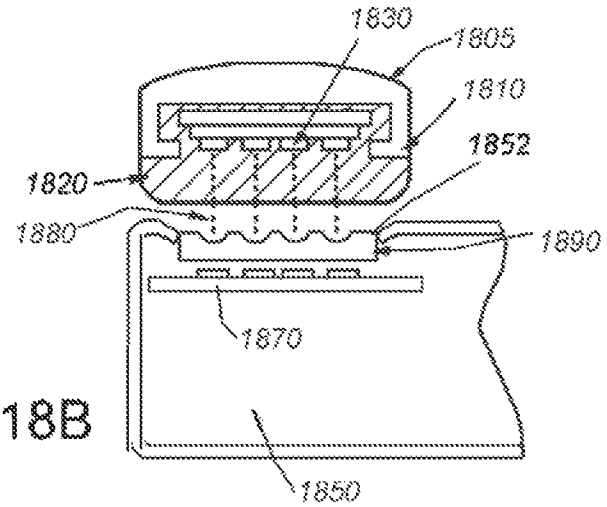


FIG. 18B

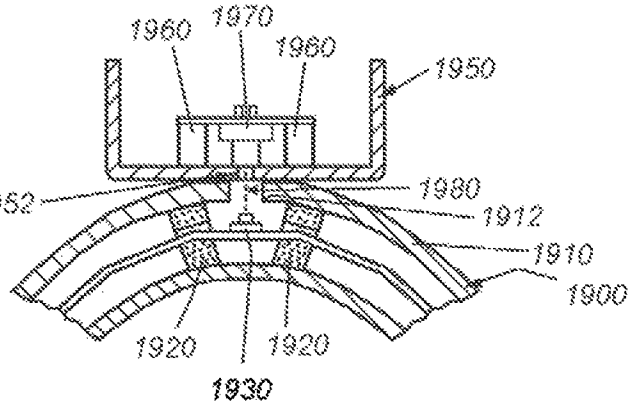


FIG. 19A

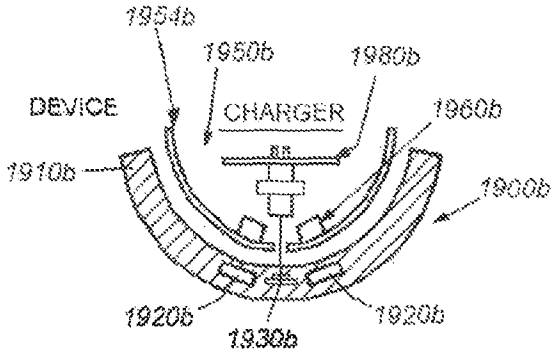


FIG. 19B

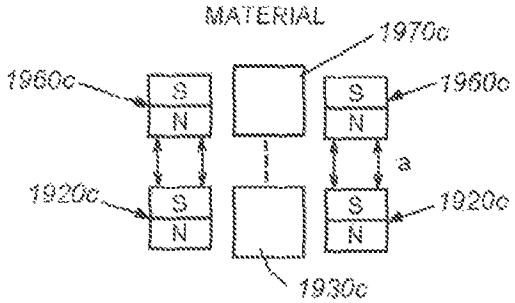


FIG. 19C

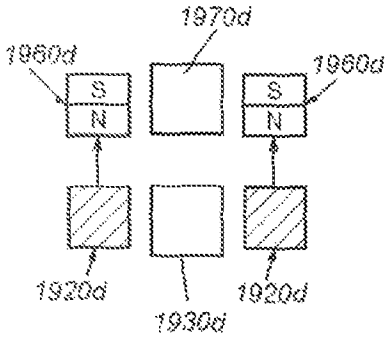


FIG. 19D

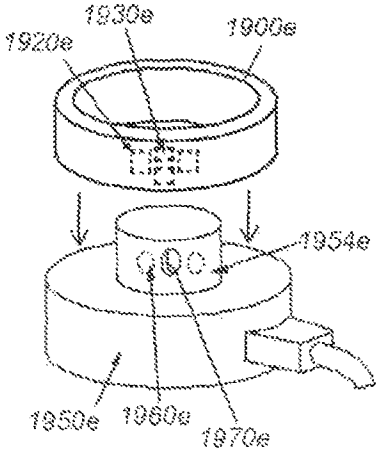


FIG. 19E

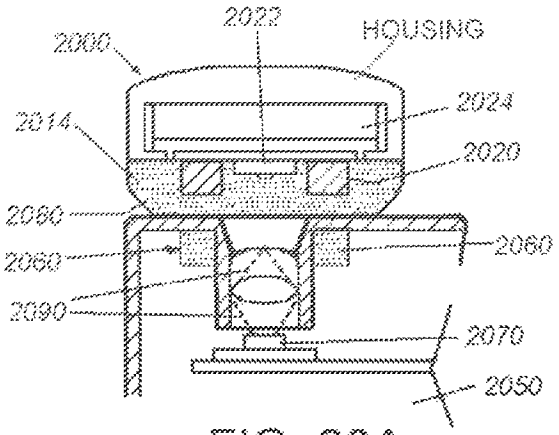


FIG. 20A

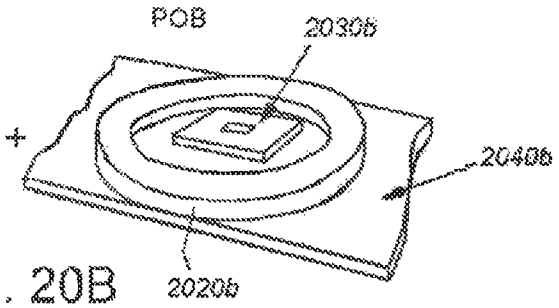


FIG. 20B

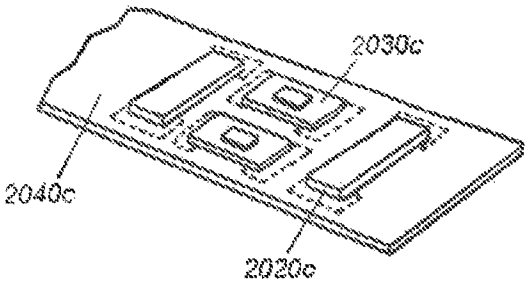


FIG. 20C

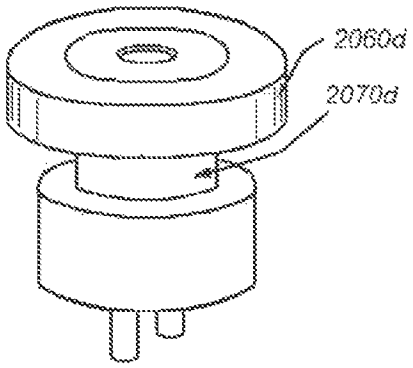


FIG. 20D

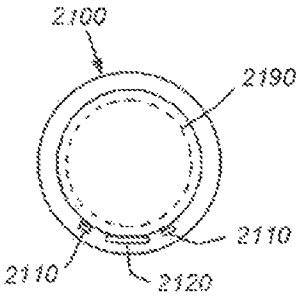


FIG. 21A

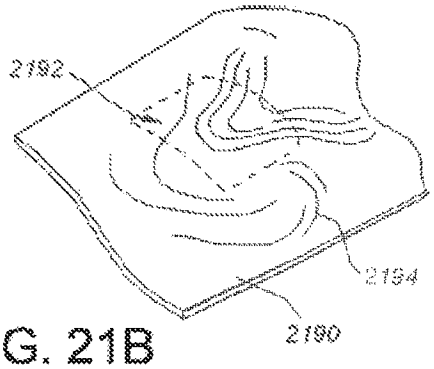


FIG. 21B

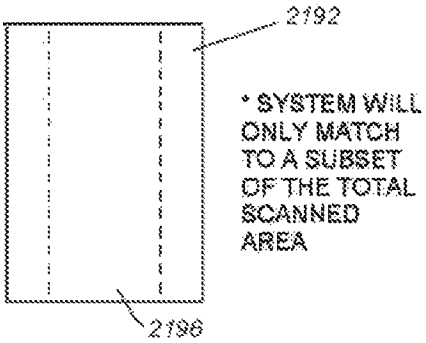


FIG. 21C

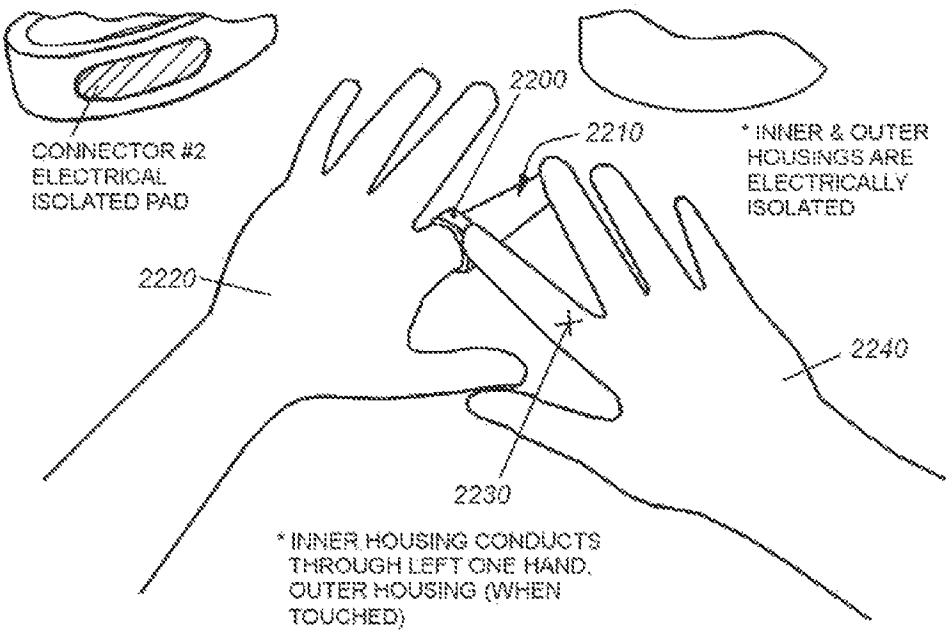


FIG. 22A

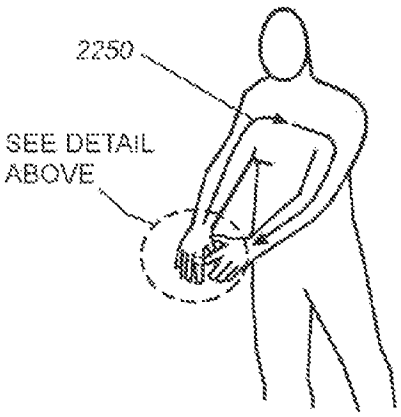


FIG. 22B

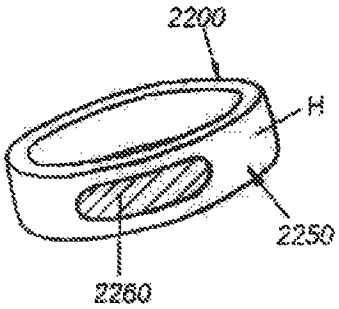


FIG. 22C

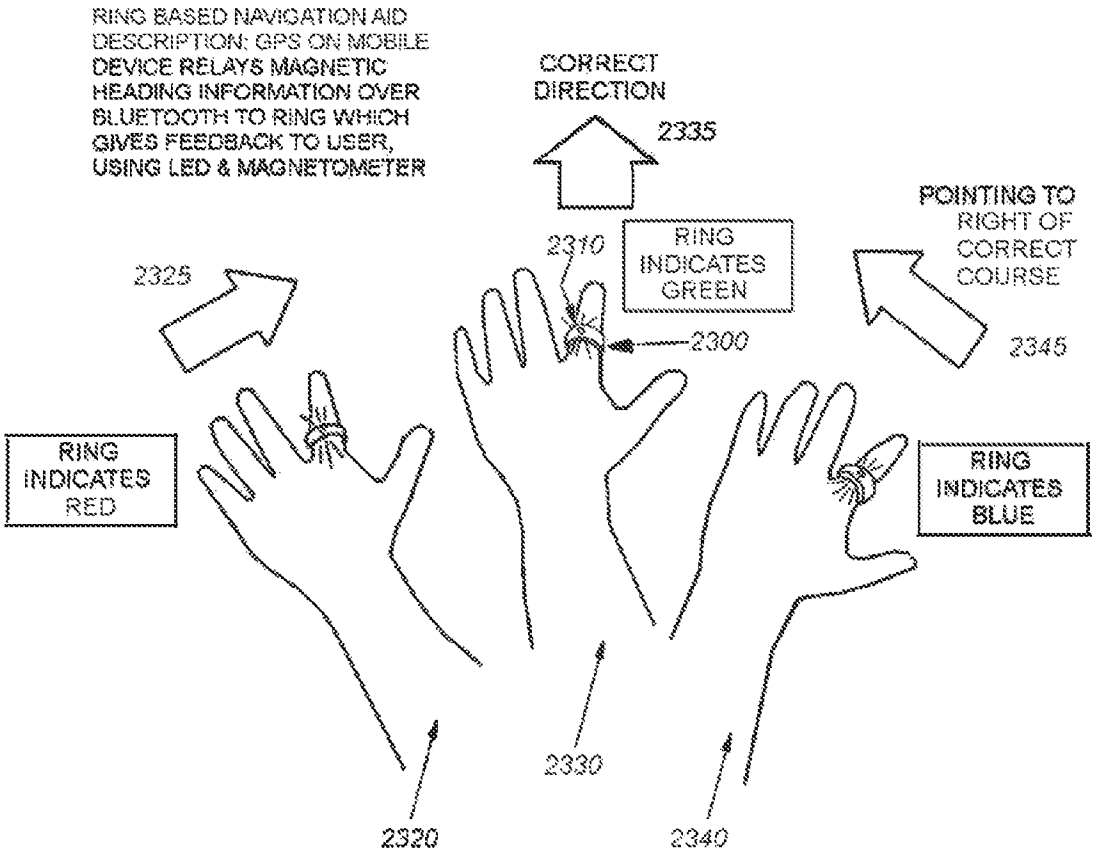
RING BASED NAVIGATION AID DESCRIPTION: GPS ON MOBILE DEVICE RELAYS MAGNETIC HEADING INFORMATION OVER BLUETOOTH TO RING WHICH GIVES FEEDBACK TO USER, USING LED & MAGNETOMETER
CORRECT DIRECTION
2335
POINTING TO RIGHT OF CORRECT COURSE
2310
RING INDICATES GREEN
2325
2300
2345
RING INDICATES RED
RING INDICATES BLUE
2330
2320
2340

FIG. 23A

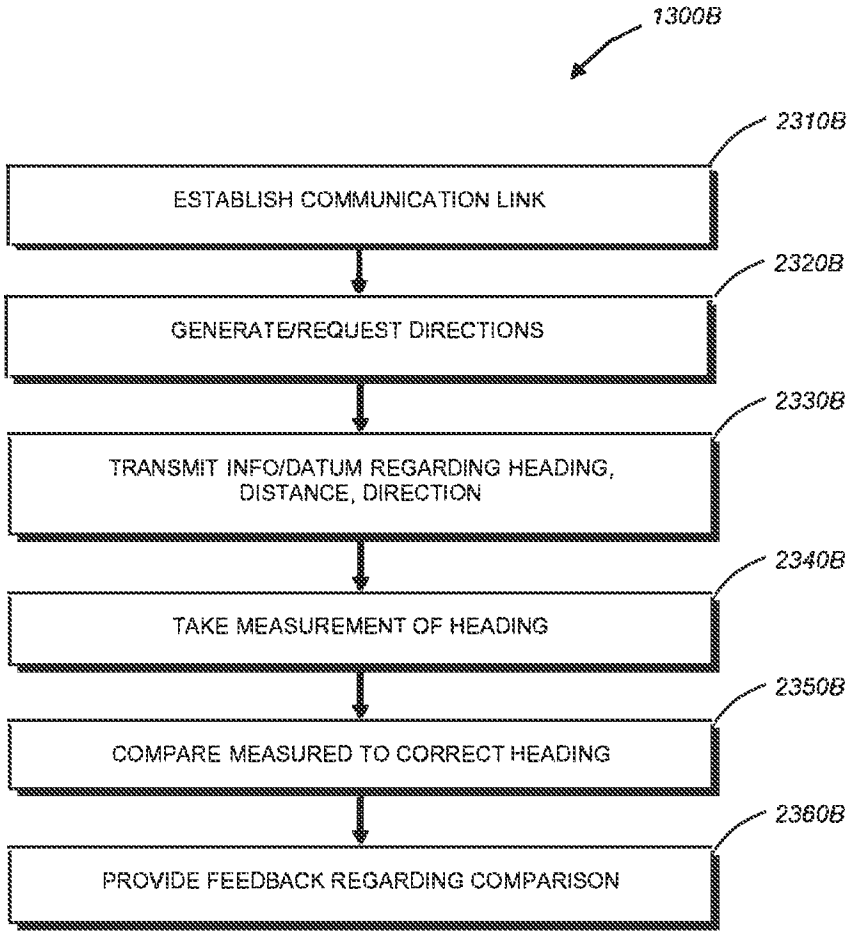
1300B
2310B
ESTABLISH COMMUNICATION LINK
2320B
GENERATE/REQUEST DIRECTIONS
2330B
TRANSMIT INFO/DATUM REGARDING HEADING, DISTANCE, DIRECTION
2340B
TAKE MEASUREMENT OF HEADING
2350B
COMPARE MEASURED TO CORRECT HEADING
2360B
PROVIDE FEEDBACK REGARDING COMPARISON

FIG. 23B

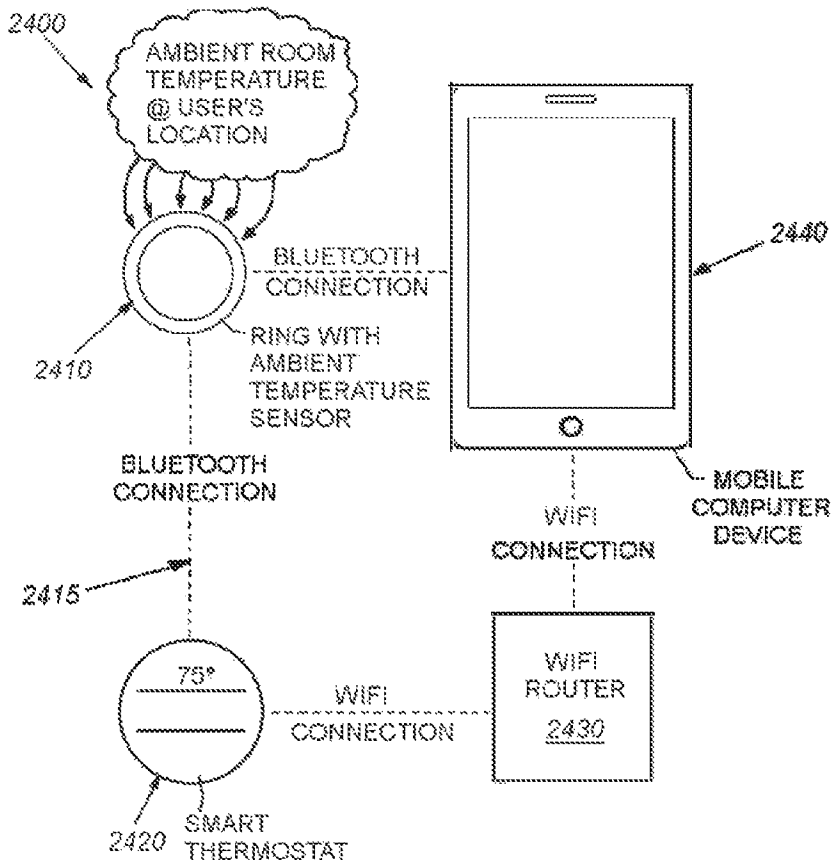


FIG. 24A

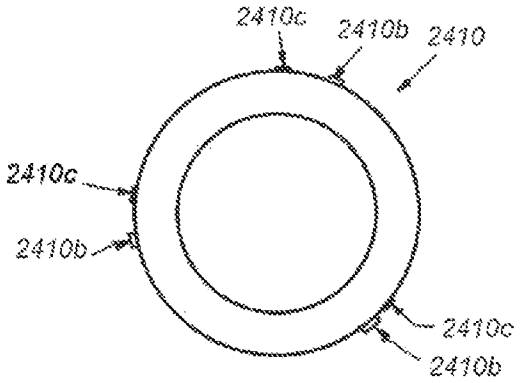


FIG. 24B

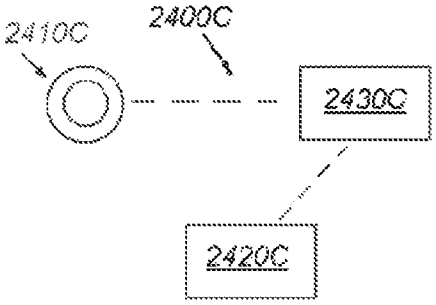


FIG. 24C

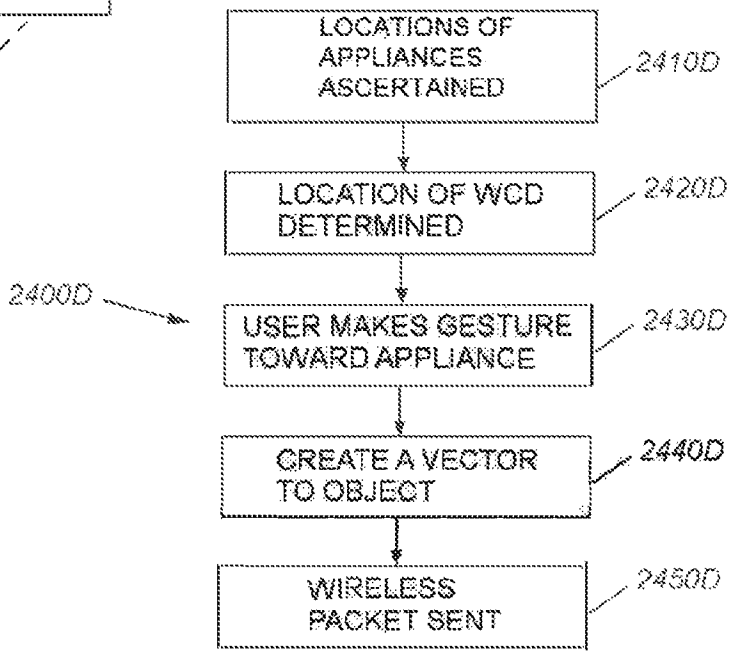


FIG. 24D

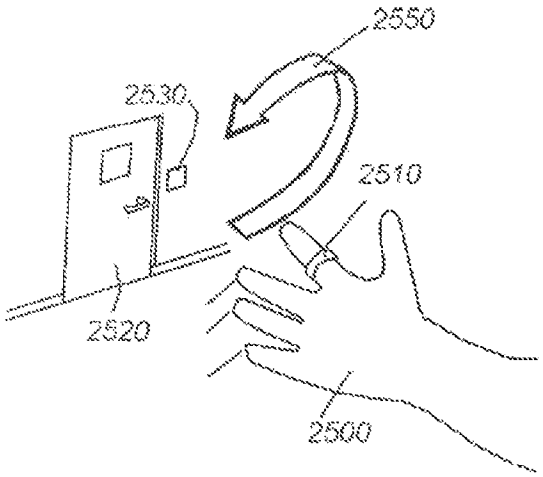


FIG. 25

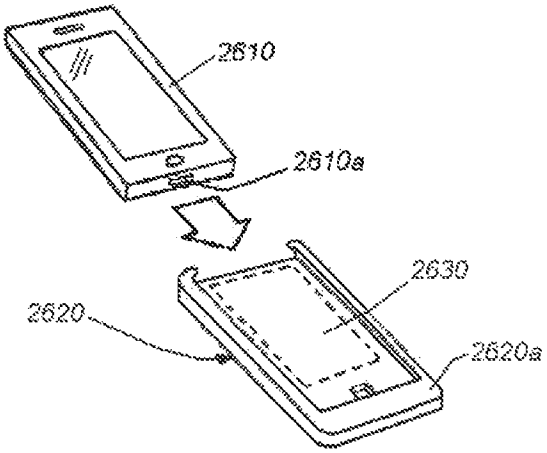


FIG. 26A

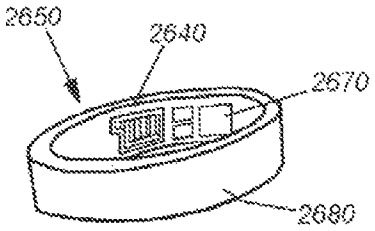


FIG. 26B

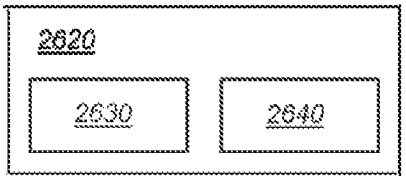


FIG. 26C

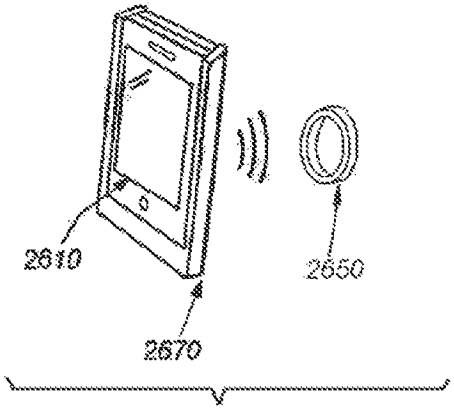


FIG. 26D

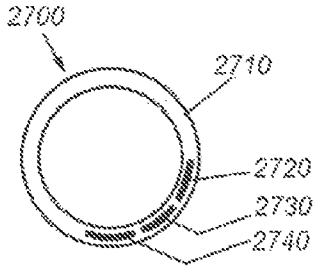


FIG. 27A

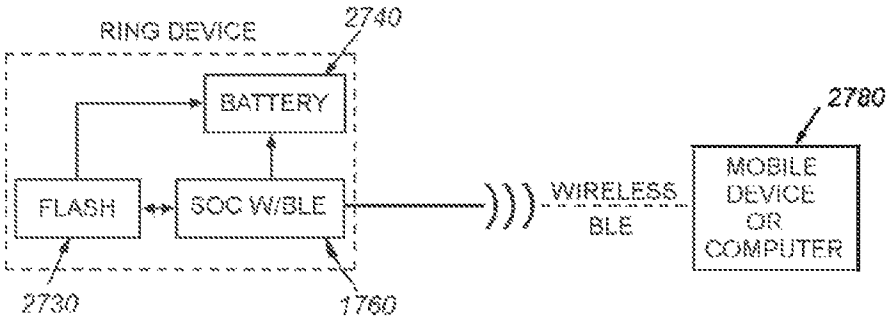


FIG. 27B

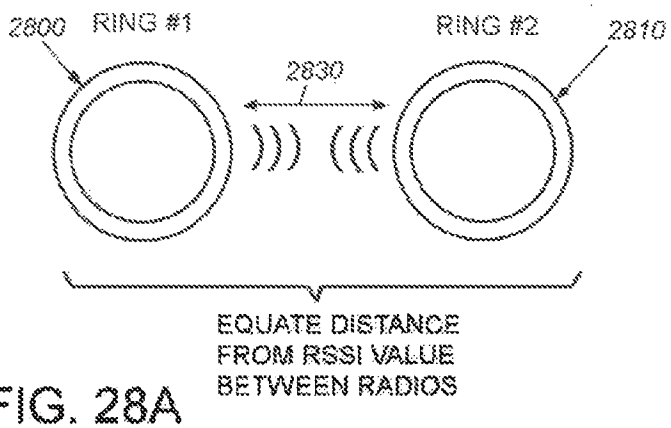


FIG. 28A

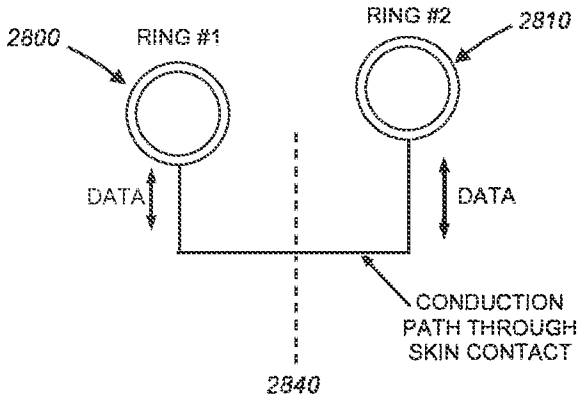


FIG. 28B

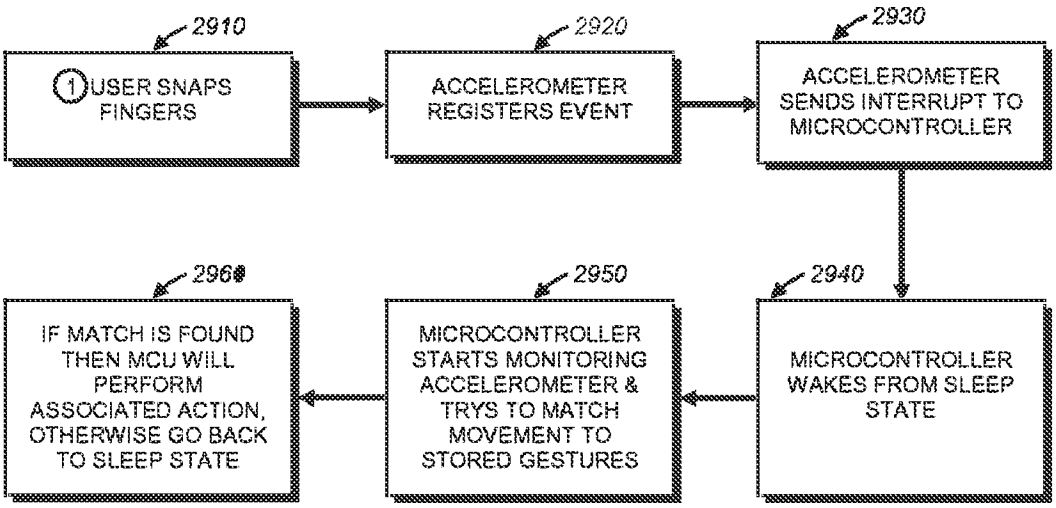


FIG. 29A

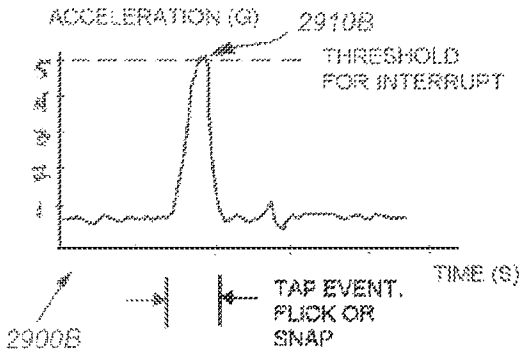


FIG. 29B

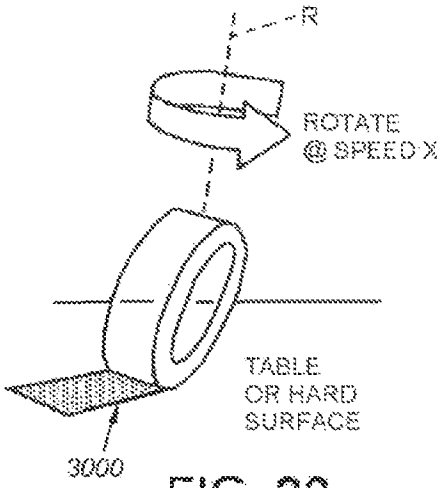


FIG. 30

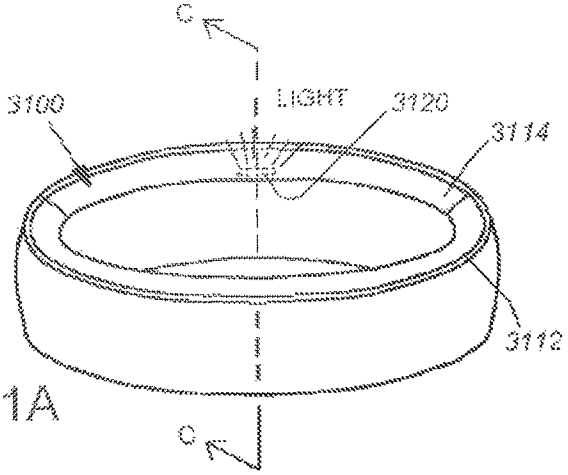


FIG. 31A

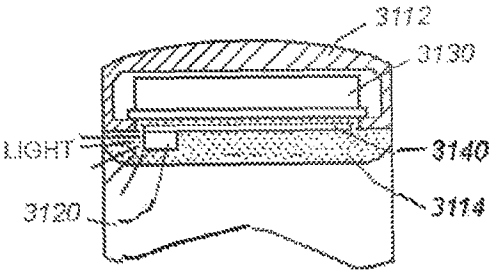


FIG. 31C

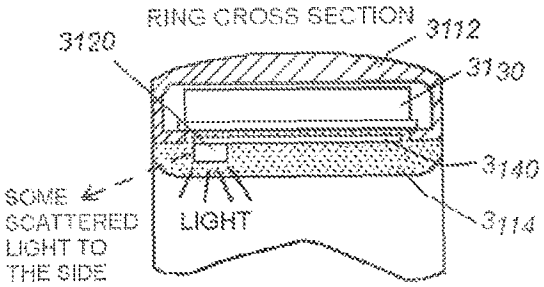


FIG. 31B

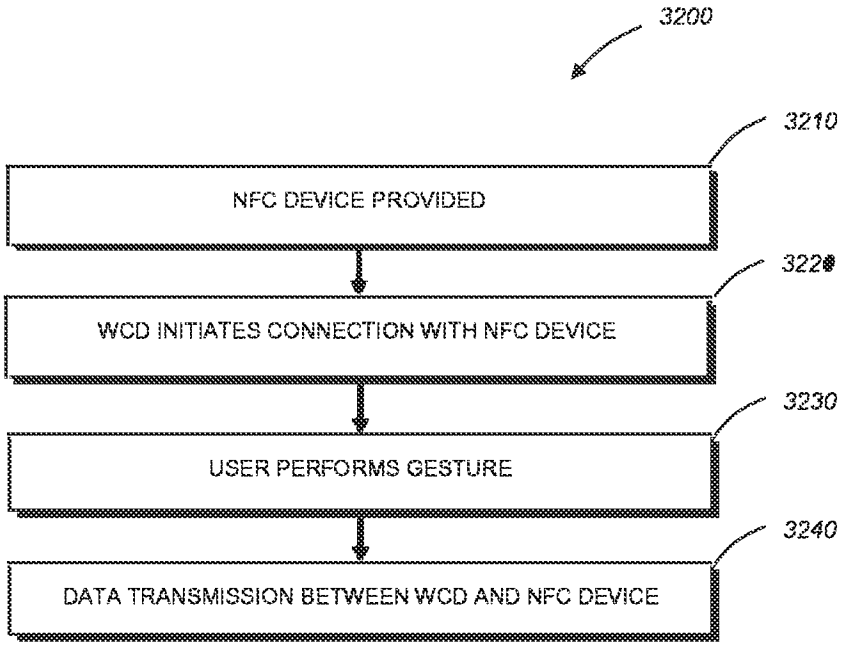
3200
3210
NFC DEVICE PROVIDED
3220
WCD INITIATES CONNECTION WITH NFC DEVICE
3230
USER PERFORMS GESTURE
3240
DATA TRANSMISSION BETWEEN WCD AND NFC DEVICE

FIG. 32

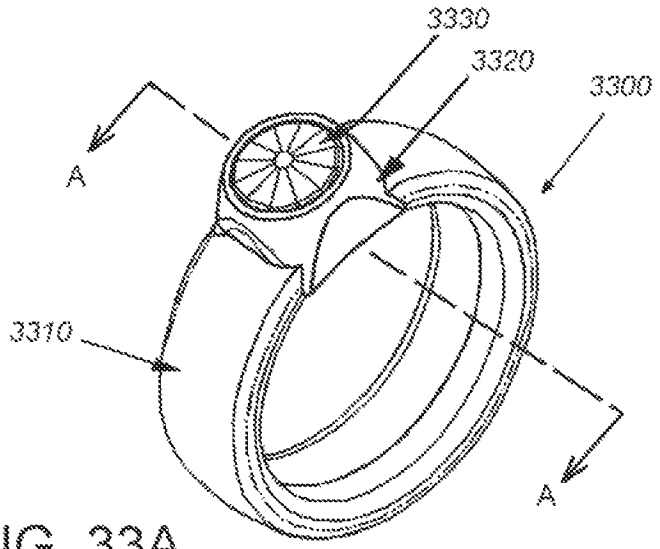


FIG. 33A

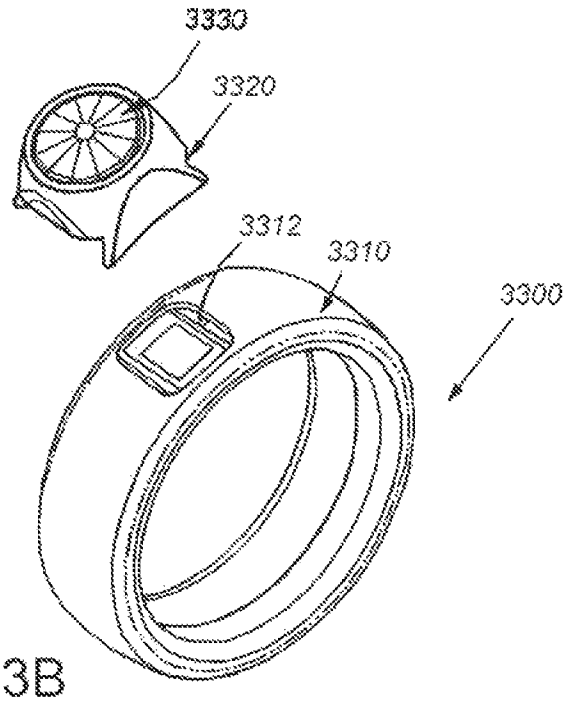


FIG. 33B

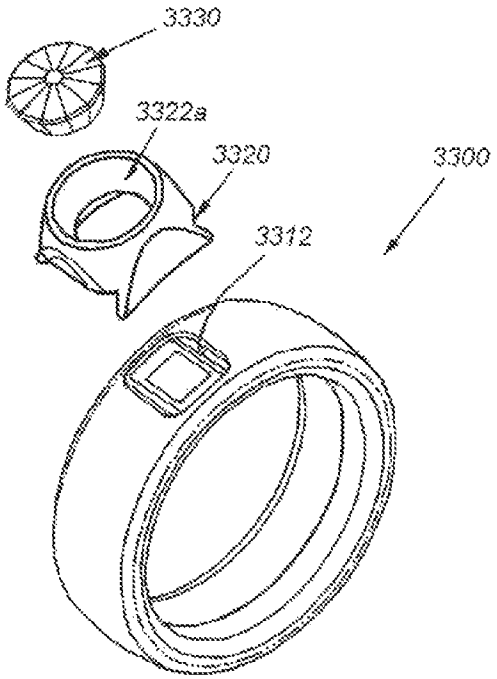


FIG. 33C

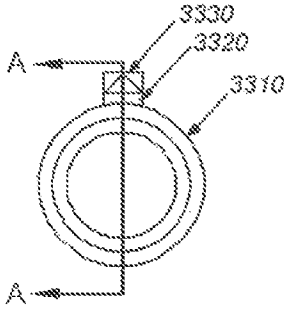


FIG. 33D

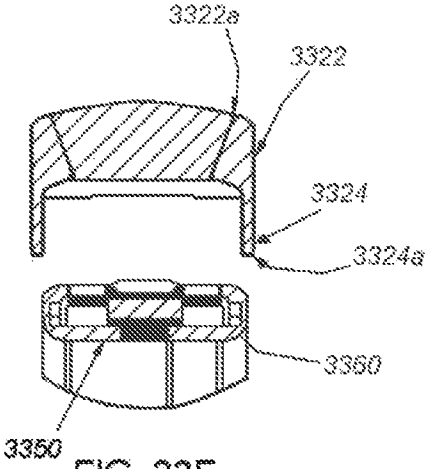


FIG. 33E

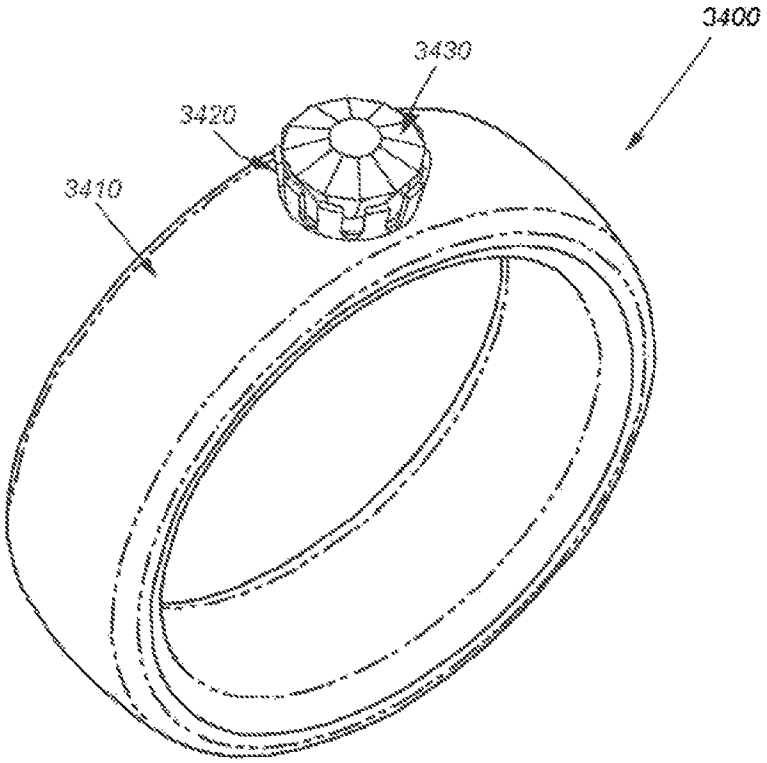


FIG. 34A

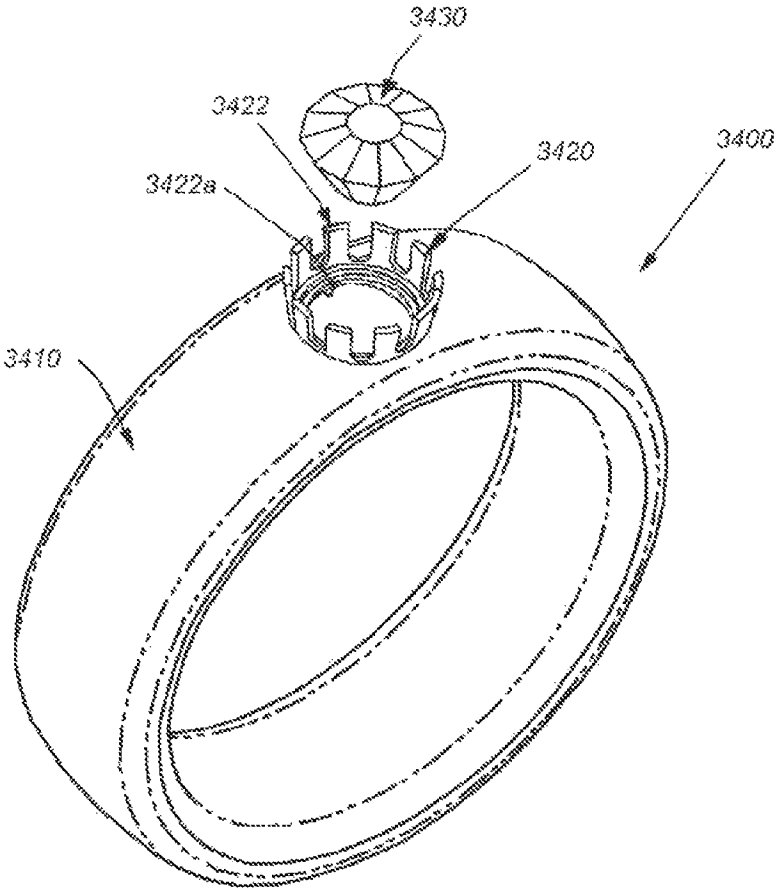


FIG. 34B

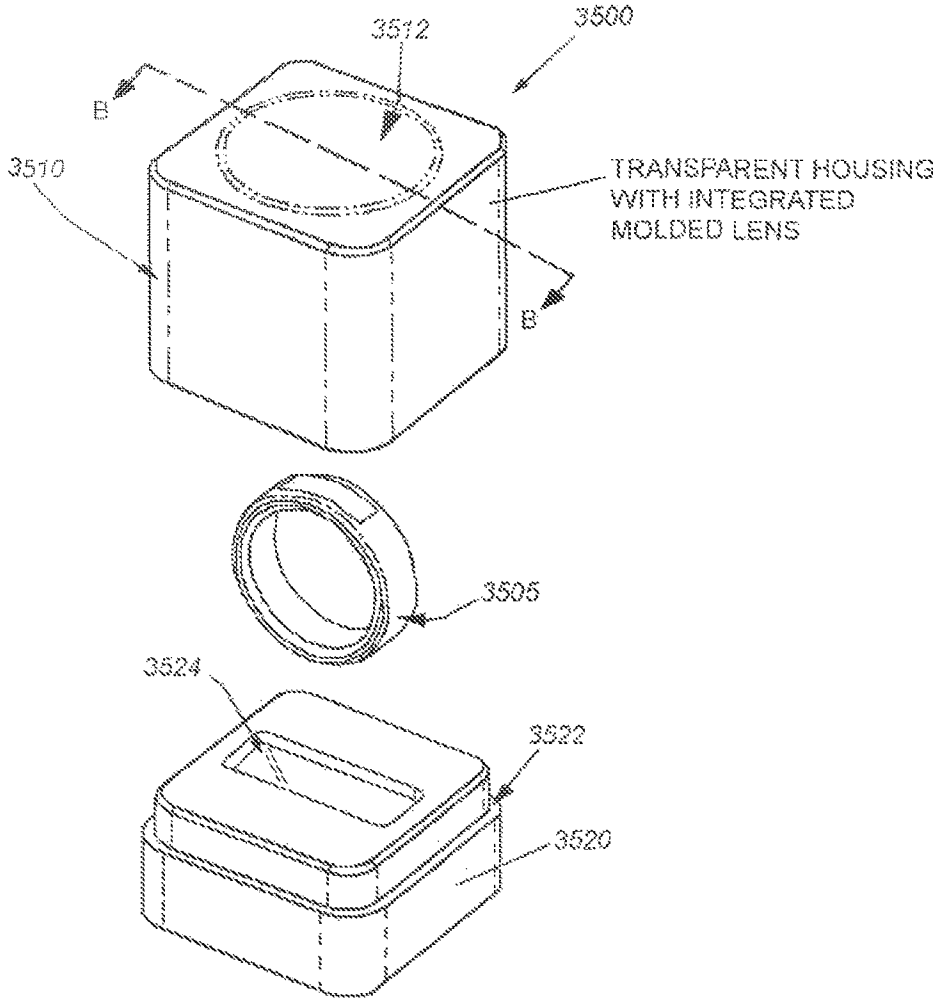
3500
3512
B
3510
TRANSPARENT HOUSING
WITH INTEGRATED
MOLDED LENS
B
3505
3524
3522
3520

FIG. 35A

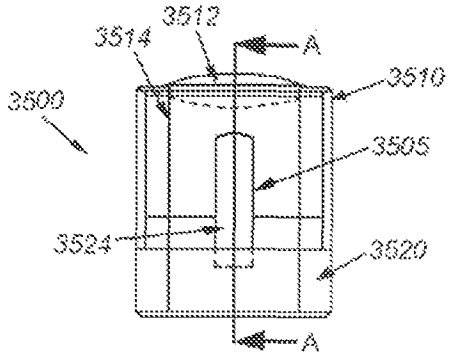


FIG. 35B

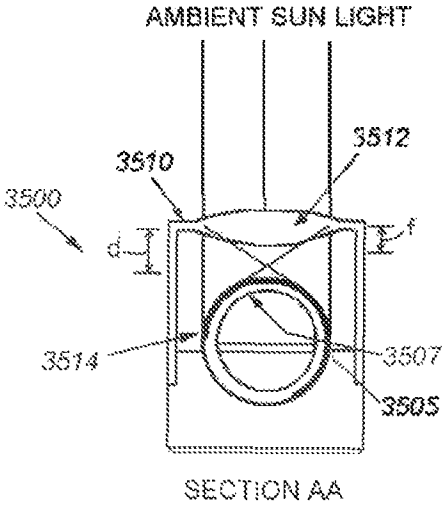


FIG. 35C

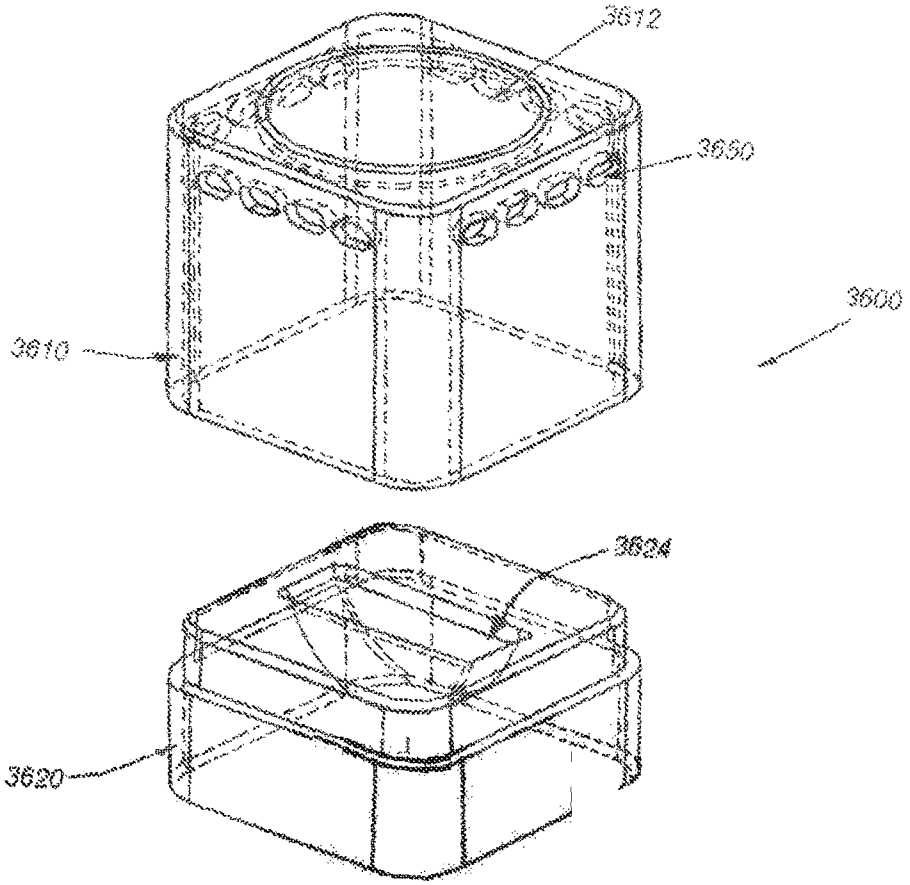


FIG. 36

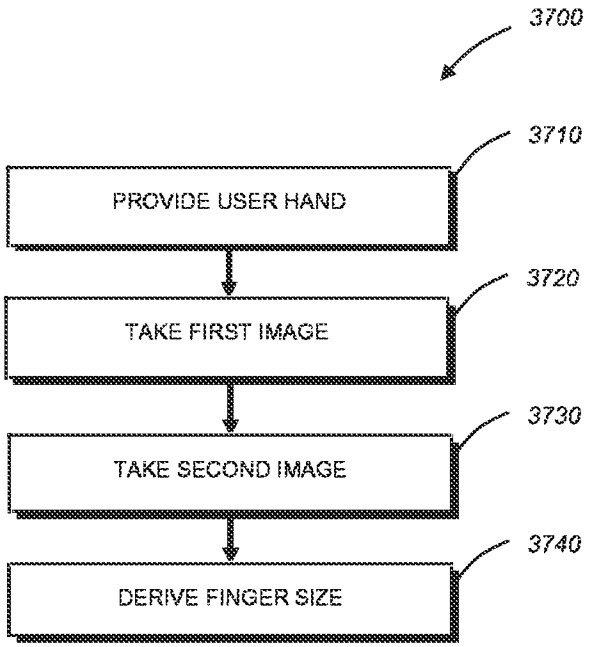
3700
3710
PROVIDE USER HAND
3720
TAKE FIRST IMAGE
3730
TAKE SECOND IMAGE
3740
DERIVE FINGER SIZE

FIG. 37

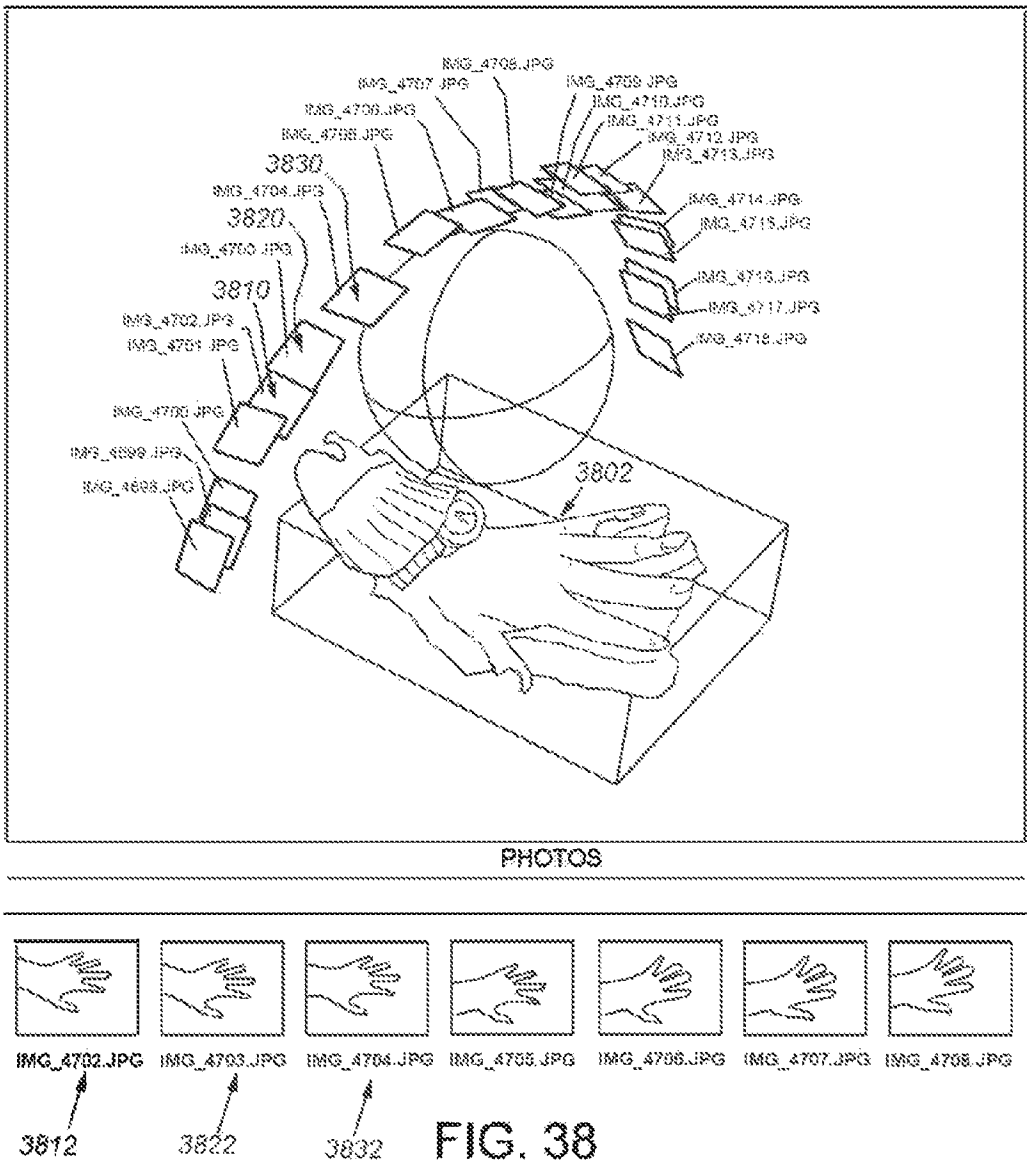
IMG_4708.JPG
IMG_4707.JPG
IMG_4706.JPG
IMG_4705.JPG
IMG_4709.JPG
IMG_4710.JPG
IMG_4711.JPG
IMG_4712.JPG
IMG_4713.JPG
3830
IMG_4704.JPG
3820
IMG_4703.JPG
3810
IMG_4702.JPG
IMG_4701.JPG
IMG_4700.JPG
IMG_4699.JPG
IMG_4698.JPG
IMG_4714.JPG
IMG_4715.JPG
IMG_4716.JPG
IMG_4717.JPG
IMG_4718.JPG
3802
PHOTOS
IMG_4702.JPG
IMG_4703.JPG
IMG_4704.JPG
IMG_4705.JPG
IMG_4706.JPG
IMG_4707.JPG
IMG_4708.JPG
3812
3822
3832

FIG. 38

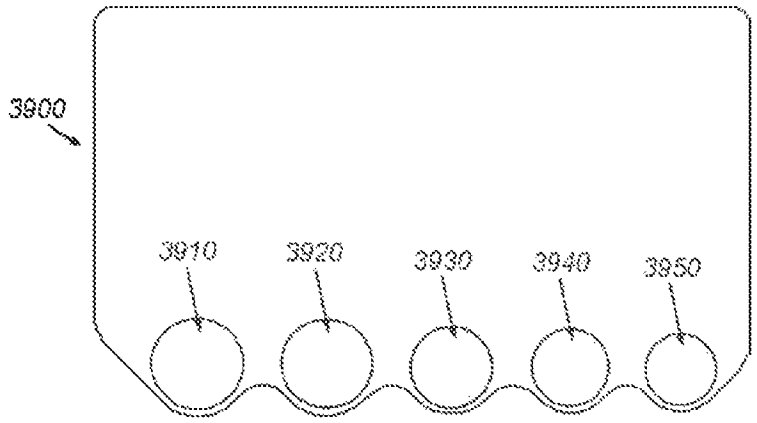


FIG. 39

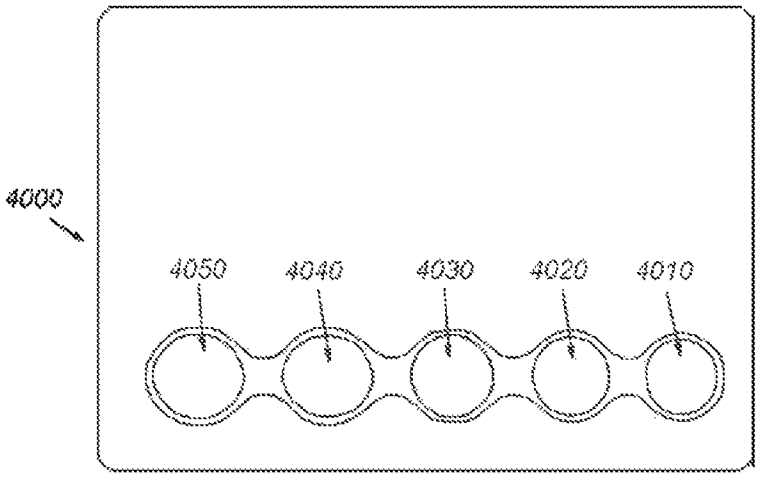


FIG. 40

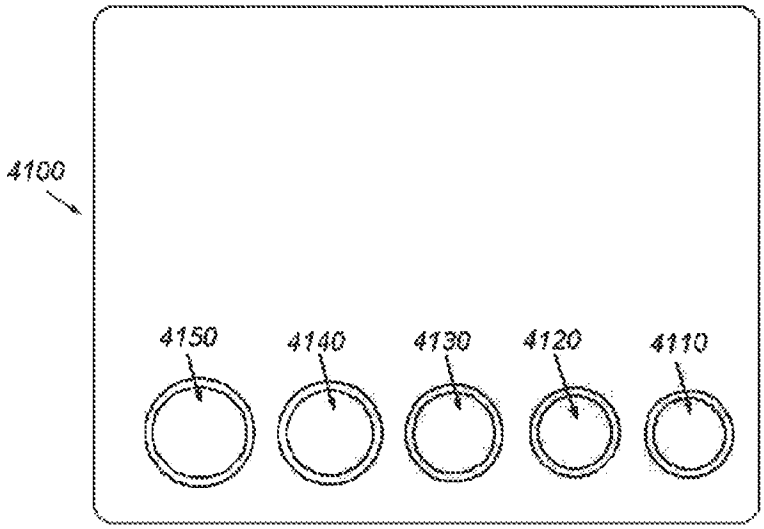


FIG. 41

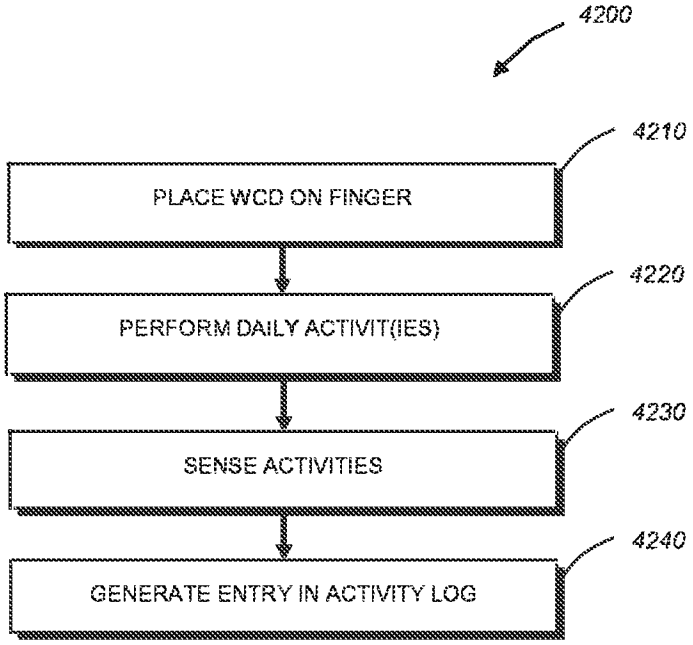
4200
4210
PLACE WCD ON FINGER
4220
PERFORM DAILY ACTIVIT(IES)
4230
SENSE ACTIVITIES
4240
GENERATE ENTRY IN ACTIVITY LOG

FIG. 42

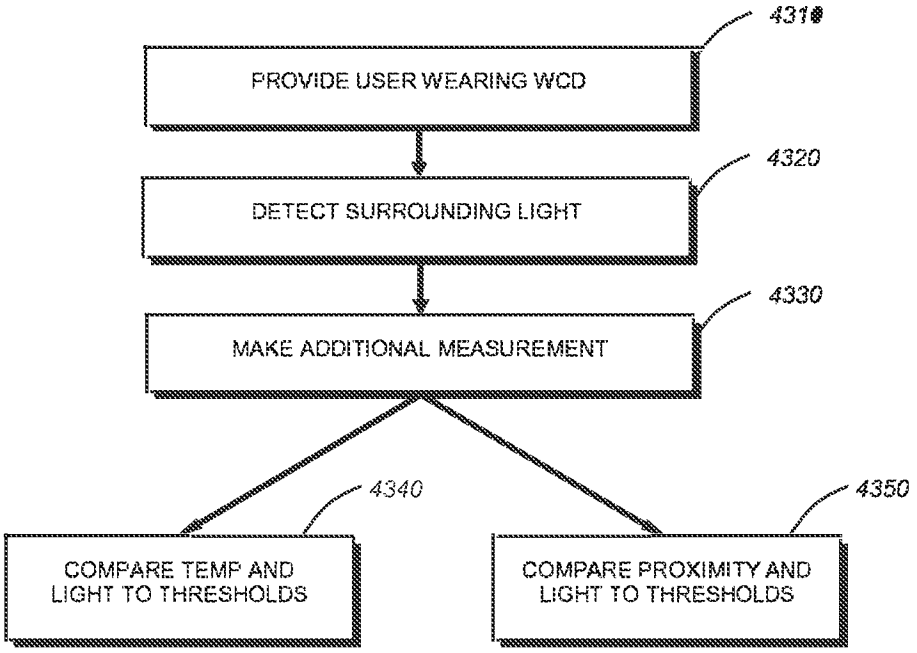
4310
PROVIDE USER WEARING WCD
4320
DETECT SURROUNDING LIGHT
4330
MAKE ADDITIONAL MEASUREMENT
4340
COMPARE TEMP AND LIGHT TO THRESHOLDS
4350
COMPARE PROXIMITY AND LIGHT TO THRESHOLDS

FIG. 43

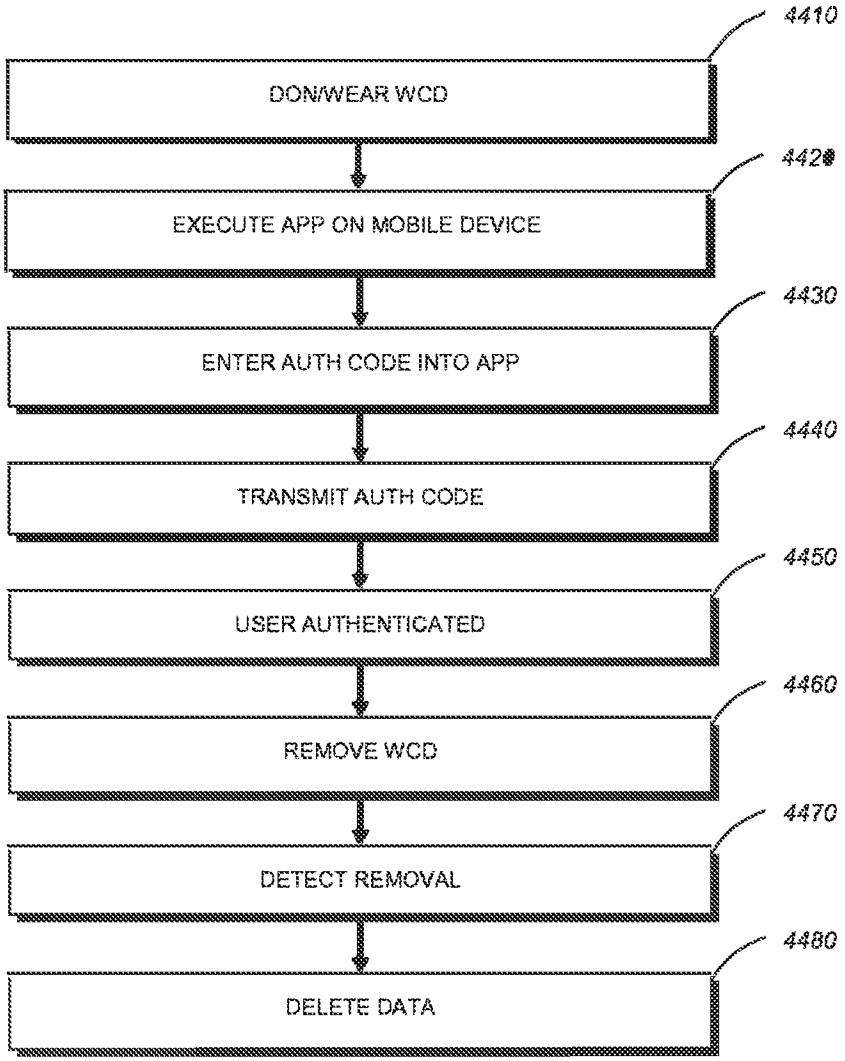
4410
DON/WEAR WCD
4420
EXECUTE APP ON MOBILE DEVICE
4430
ENTER AUTH CODE INTO APP
4440
TRANSMIT AUTH CODE
4450
USER AUTHENTICATED
4460
REMOVE WCD
4470
DETECT REMOVAL
4480
DELETE DATA

FIG. 44

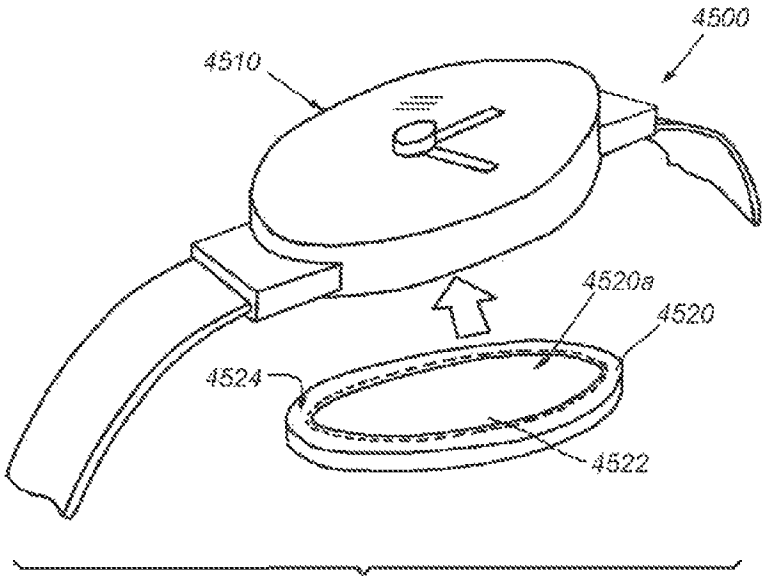


FIG. 45A

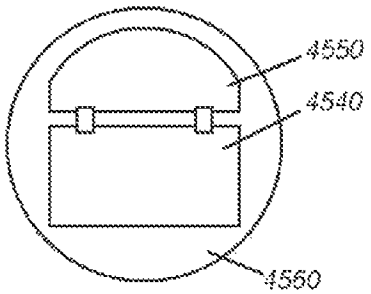


FIG. 45B

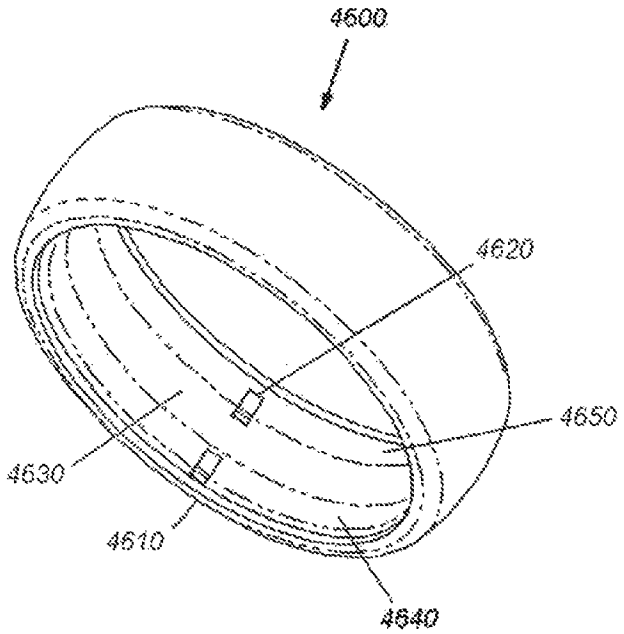


FIG. 46

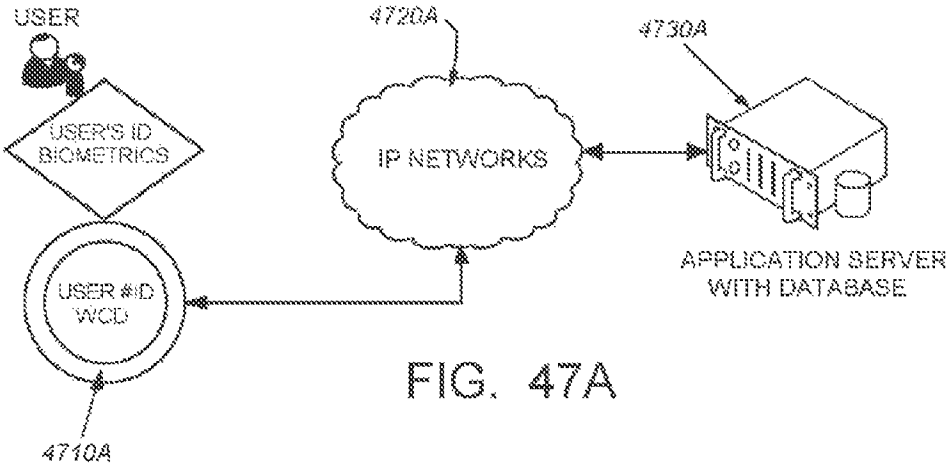


FIG. 47A

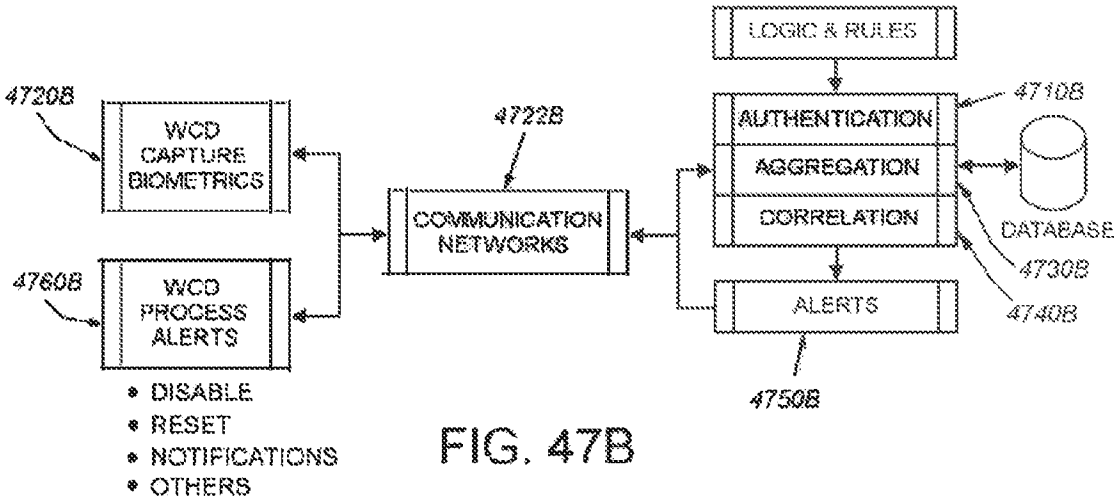


FIG. 47B

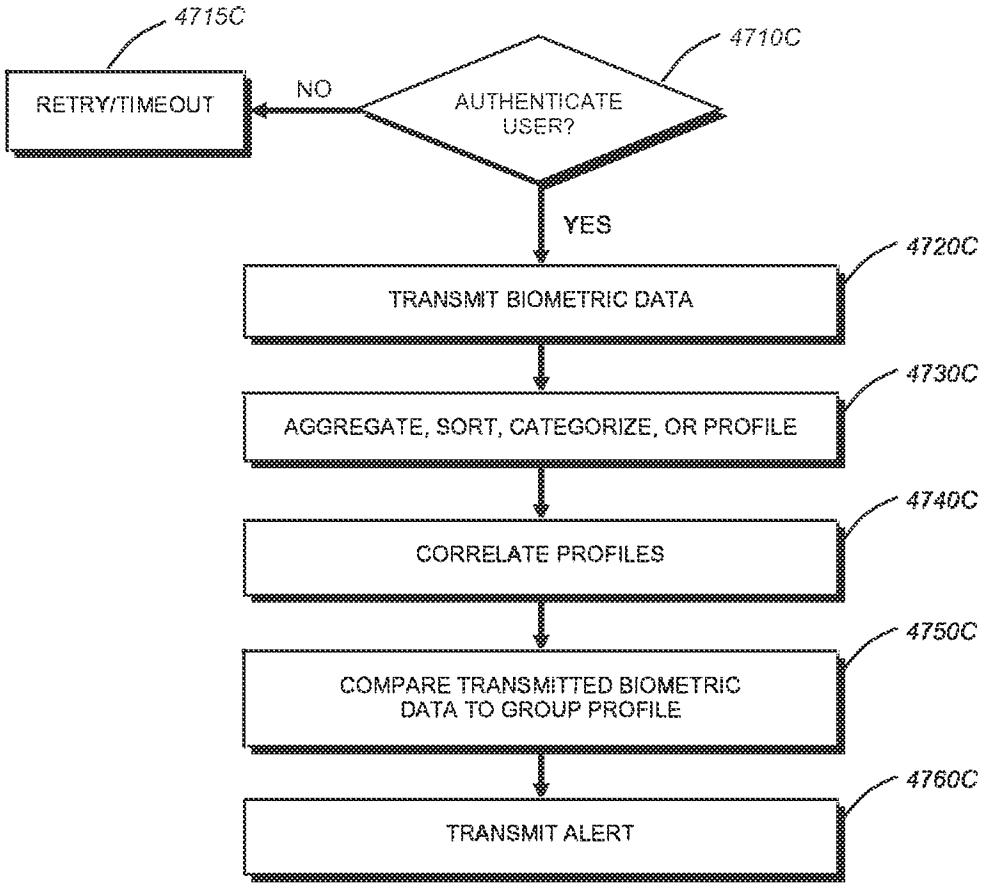
4715C
RETRY/TIMEOUT
NO
4710C
AUTHENTICATE USER?
YES
4720C
TRANSMIT BIOMETRIC DATA
4730C
AGGREGATE, SORT, CATEGORIZE, OR PROFILE
4740C
CORRELATE PROFILES
4750C
COMPARE TRANSMITTED BIOMETRIC DATA TO GROUP PROFILE
4760C
TRANSMIT ALERT

FIG. 47C

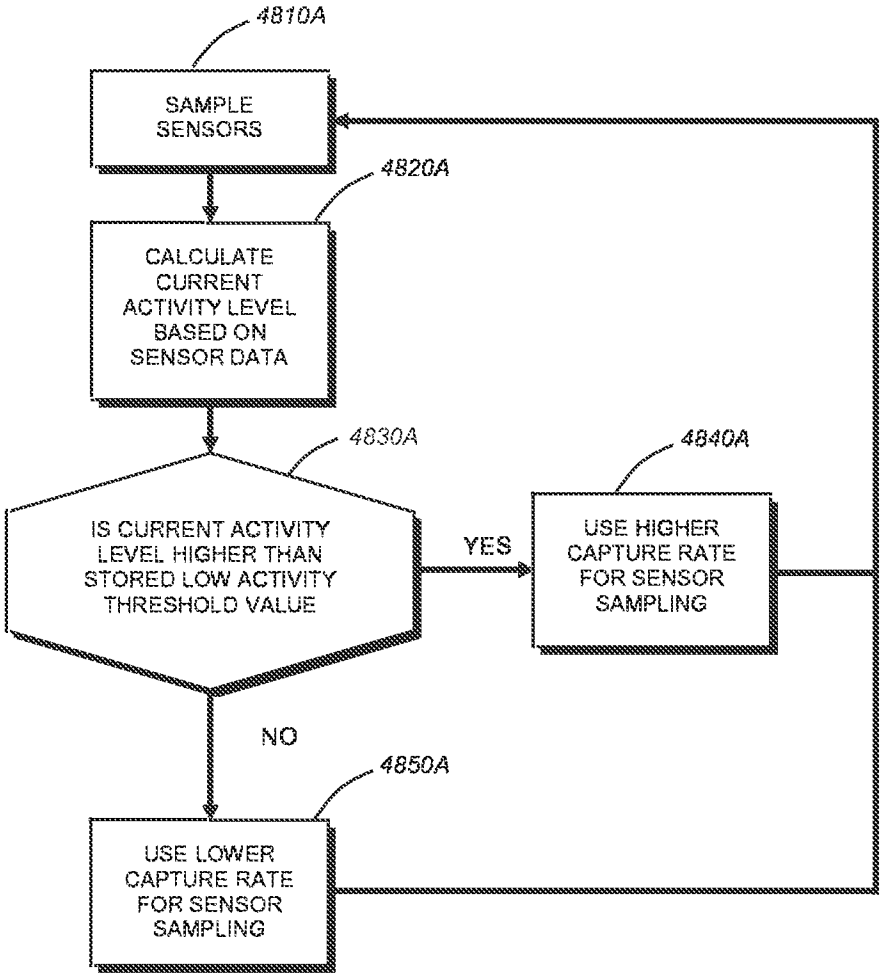
4810A
SAMPLE SENSORS
4820A
CALCULATE CURRENT ACTIVITY LEVEL BASED ON SENSOR DATA
4830A
IS CURRENT ACTIVITY LEVEL HIGHER THAN STORED LOW ACTIVITY THRESHOLD VALUE
YES
4840A
USE HIGHER CAPTURE RATE FOR SENSOR SAMPLING
NO
4850A
USE LOWER CAPTURE RATE FOR SENSOR SAMPLING

FIG. 48A

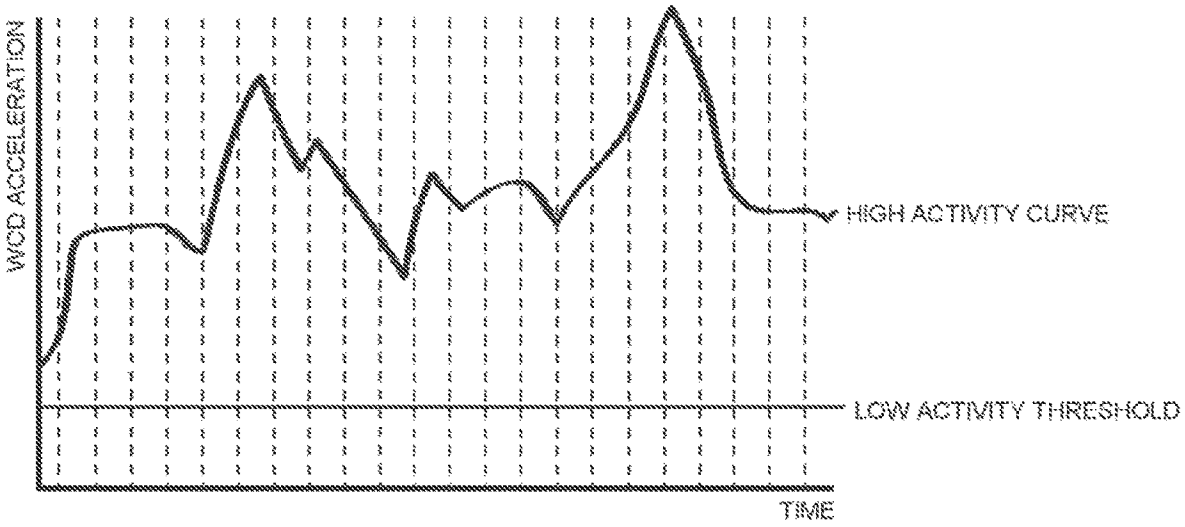


FIG. 48B

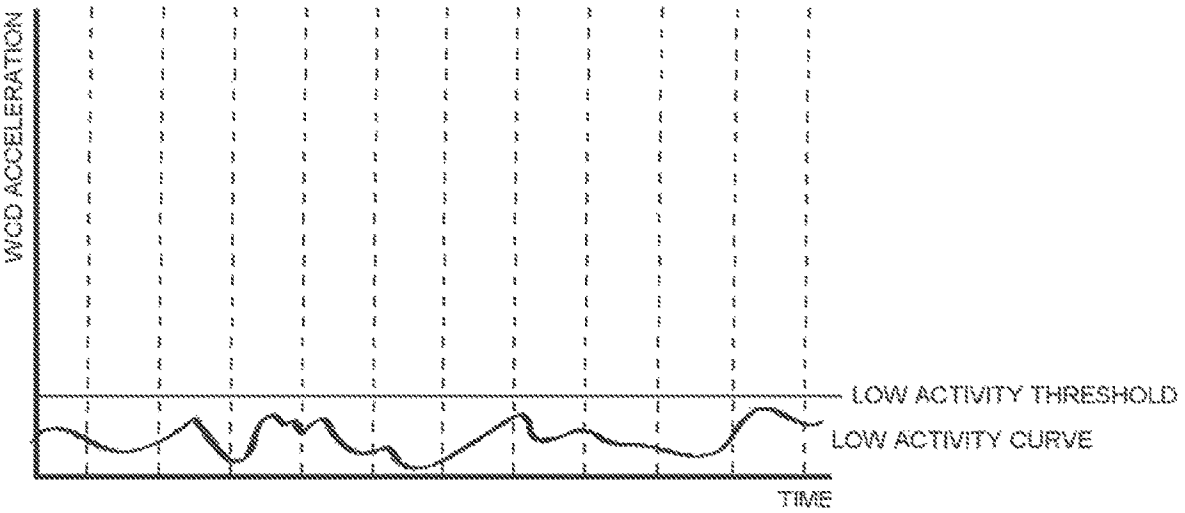


FIG. 48C

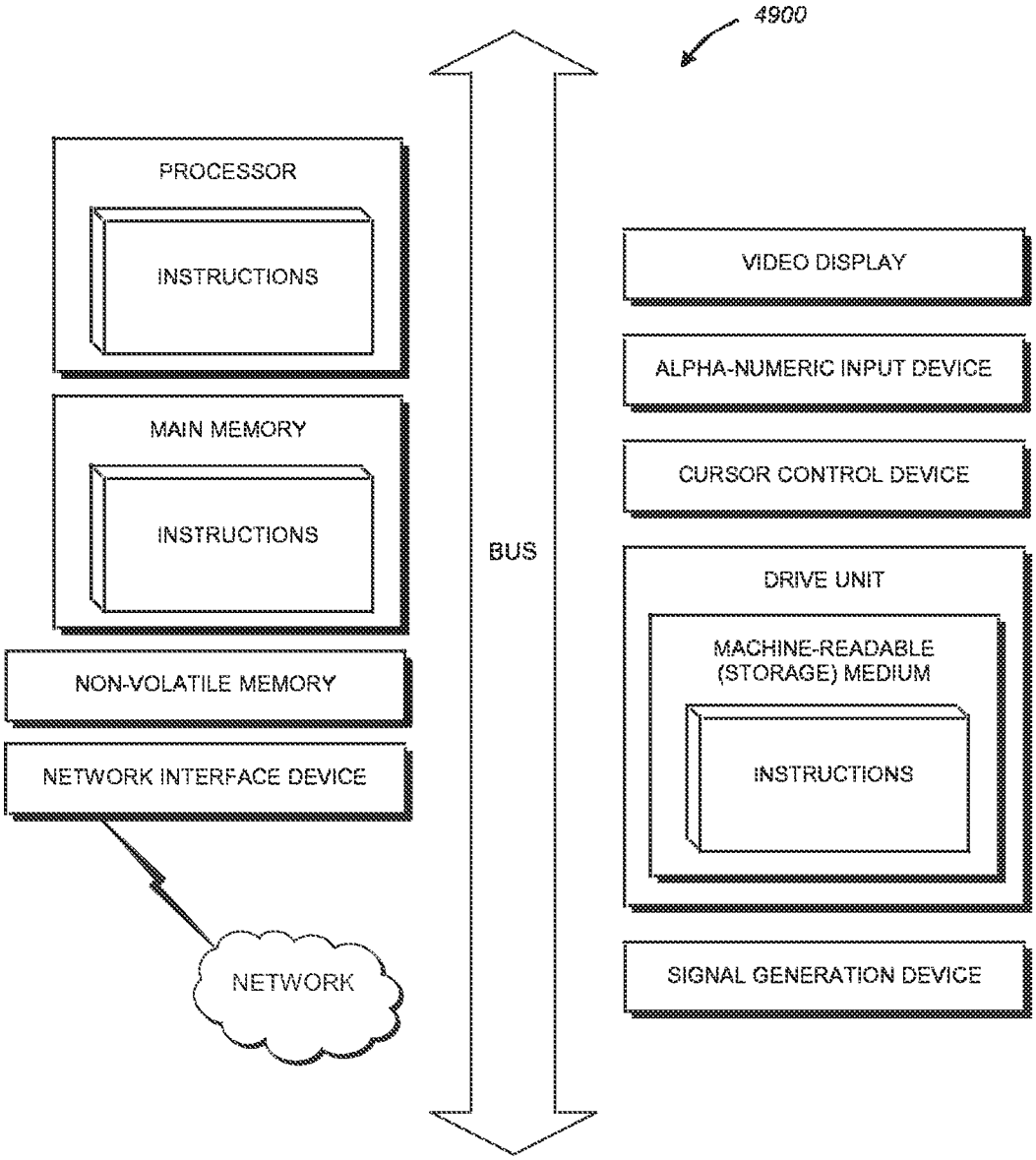
4900
PROCESSOR
INSTRUCTIONS
MAIN MEMORY
INSTRUCTIONS
NON-VOLATILE MEMORY
NETWORK INTERFACE DEVICE
NETWORK
BUS
VIDEO DISPLAY
ALPHA-NUMERIC INPUT DEVICE
CURSOR CONTROL DEVICE
DRIVE UNIT
MACHINE-READABLE (STORAGE) MEDIUM
INSTRUCTIONS
SIGNAL GENERATION DEVICE

FIG. 49

# WEARABLE COMPUTING DEVICE

## CROSS REFERENCE

The present Application for Patent is a Continuation of U.S. patent application Ser. No. 18/179,272, by von Badinski et al., entitled "WEARABLE COMPUTING DEVICE," filed Mar. 6, 2023, which is a Continuation of U.S. patent application Ser. No. 17/519,201, by von Badinski et al., entitled "WEARABLE COMPUTING DEVICE," filed Nov. 4, 2021, which is a Continuation of U.S. patent application Ser. No. 17/013,348, by von Badinski et al., entitled "WEARABLE COMPUTING DEVICE," filed Sep. 4, 2020, which is a Continuation of U.S. patent application Ser. No. 16/224,686, by von Badinski et al, entitled "WEARABLE COMPUTING DEVICE," filed Dec. 18, 2018, which is a Division of U.S. patent application Ser. No. 15/444,217, by von Badinski et al., entitled "WEARABLE COMPUTING DEVICE," filed Feb. 27, 2017, which is a Division of U.S. patent application Ser. No. 14/556,062, by von Badinski et al, entitled "WEARABLE COMPUTING DEVICE," filed Nov. 28, 2014, which claims the benefit of U.S. Provisional Application Ser. No. 62/006,835, by von Badinski et al., entitled "WEARABLE COMPUTING DEVICE," filed Jun. 2, 2014, and U.S. Provisional Application Ser. No. 61/910,201, by von Badinski et al., entitled "FINGER RING DEVICE FOR ACTIVITY MONITORING OR GESTURAL INPUT," filed Nov. 29, 2013, each of which is expressly incorporated by reference herein.

## FIELD OF TECHNOLOGY

This invention is in the field of wearable electronic devices.

## BACKGROUND

Wearable electronics are an emerging technology with many applications for the wearer. They can improve lifestyles, ease access to technology and help monitor activity within the wearer's body. However, many current wearable electronics are bulky and can be intrusive or interfere with a person's daily life. In this regard, the wearer may not be comfortable wearing the device for extended periods of time.

## SUMMARY OF THE INVENTION

This invention overcomes the disadvantages of the prior art by providing a wearable computing device (WCD) in the shape of a ring. The wearable computing device can be worn for extended periods of time and can take many measurements and perform various functions because of its form factor and position on the finger of a user.

One aspect of the disclosure provides a wearable computing device, comprising: an interior wall; an exterior wall; a flexible printed circuit board disposed between the interior wall and the exterior wall; at least one component disposed on the flexible printed circuit board; and wherein at least one of the interior wall and the exterior wall defines a window that facilitates at least one of data transmission, battery recharge, and status indication.

In one example, the window comprises an internal window defined by the interior wall.

In one example, the window comprises an exterior window defined by the exterior wall.



In one example, the window comprises a plurality of exterior windows defined by the exterior wall.

In one example, the plurality of exterior windows comprises a first exterior window and a second exterior window, wherein the first exterior window facilities battery charging and the second exterior window facilities data transmission.

In one example, at least one concentrated photovoltaic cell, an antenna, and at least one LED are accessible via the window.

Another aspect of the disclosure provides a wearable computing device, comprising: an internal housing portion configured to be disposed near a finger of a user; a flexible printed circuit board arranged around a portion of a circumference of an interior surface of the internal housing; at least one component disposed on the flexible printed circuit board; and an external housing portion configured to seal the at least one component and the printed circuit board in an internal space defined by the interior surface of the internal housing.

In one example, the external housing portion comprises a substantially transparent external potting.

In one example, the at least one component comprises at least one LED configured to emit at least one of visible light, infrared radiation, and ultraviolet radiation through the external potting.

In one example, the at least one component comprises a concentrated photovoltaic cell configured to receive concentrated light through the transparent external potting.

In one example, the flexible printed circuit board includes a plurality of stiffener elements configured to engage with a corresponding plurality of flanges disposed on the internal housing portion.

Another aspect of the disclosure provides a wearable computing device, comprising: an external housing portion; a flexible printed circuit board arranged around a portion of a circumference of an interior surface of the external housing; at least one component disposed on the flexible printed circuit board; and an internal housing portion configured to seal the at least one component and the printed circuit board in an internal space defined by the interior surface of the external housing.

In one example, the internal housing portion comprises a substantially transparent internal potting.

In one example, the at least one component comprises at least one LED configured to emit at least one of visible light, infrared radiation, and ultraviolet radiation through the internal potting.

In one example, the at least one component comprises a concentrated photovoltaic cell configured to receive concentrated light through the transparent internal potting.

In one example, the flexible printed circuit board includes a plurality of stiffener elements configured to engage with a corresponding plurality of flanges disposed on the external housing portion.

Another aspect of the disclosure provides a system, comprising: a wearable computing device, including a housing and a photovoltaic element disposed at least partially within the housing; and a base assembly, the base assembly including a concentrated light source directed at the photovoltaic element.

In one example, the wearable computing device includes at least one ferrous element disposed within the housing, and wherein the base assembly includes at least one magnetic element disposed therein.

In one example, the concentrated light source is arranged circumferentially around the wearable computing device when the wearable computing device is engaged with the base assembly.

In one example, the concentrated light source comprises at least one of a laser diode and a light emitting diode (LED).

In one example, a housing of the WCD defines an opening through which the WCD is configured to receive concentrated light.

In one example, the base assembly comprises an optical element for focusing concentrated light emitted from the concentrated light source.

In one example, the optical element comprises a lens and is selected from the group consisting of concave, convex, piano-concave, piano-convex.

In one example, the WCD comprises at least one transparent potting configured to allow concentrated light to pass therethrough.

In one example, the WCD is ring-shaped and the base assembly comprises at least one post configured to engaged with a finger space of the WCD.

In one example, the photovoltaic cell comprises a plurality of photovoltaic cells.

Another aspect of the disclosure provides an enclosure for a wearable computing device, the enclosure comprising: a base defining a receptacle for receiving the wearable computing; a lid configured to engage with the base to substantially enclose the wearable computing device, the lid having an optical element configured to direct incident electromagnetic radiation to photovoltaic cell disposed on the wearable computing device to allow charging thereof.

In one example, the lid includes a plurality of vent holes that prevent overheating within the enclosure.

In one example, the optical element comprises a lens.

In one example, the lens has a focal length and wherein a distance between a central portion of the lens and the photovoltaic cell is greater than or less than the focal length.

Another aspect of the disclosure provides a timepiece system, comprising: a timepiece having a substantially planar under surface; and a timepiece computing device adhered to the planar under surface, the timepiece computing device being substantially cylindrical and comprising: a processor; a memory; and at least one sensor.

Another aspect of the disclosure provides a wearable computing device system, comprising: a wearable computing device; an attachment frame coupled to the wearable computing device; and an optical element removably coupled to the attachment frame, wherein the optical element is configured to direct electromagnetic radiation to a photovoltaic cell disposed on a surface of the wearable computing device to allow for charging of the wearable computing device.

In one example, the attachment frame is removably coupled to the wearable computing device.

In one example, the attachment frame engages with an inward-facing surface of the wearable computing device.

Another aspect of the disclosure provides a method of identifying an authorized user of a wearable computing device, comprising: illuminating a portion of a skin surface of the user; imaging the portion of the skin surface of the user to generate at least one first image; generating a reference capillary map corresponding to the user based at least in part on the at least one image.

In one example, the method further includes rotating the wearable computing device during the illuminating and imaging steps.

In one example, the method further includes imaging the portion of the skin surface of the user to generate at least one second image; and comparing the at least one second image to the reference capillary map in order to authenticate the user.

Another aspect of the disclosure provides a method of navigating, comprising: gesturing in a first direction while wearing a wearable computing device; comparing the first direction to a predetermined direction in a predetermined set of directions; providing feedback based on the comparison of the first direction of the predetermined direction.

In one example, the gesture comprises pointing a finger and the first direction comprises a first heading.

Another aspect of the disclosure provides a method of regulating temperature, comprising: measuring a skin temperature of a user via a first temperature sensor; measuring an ambient temperature via a second temperature sensor; comparing the skin temperature to a predetermined threshold temperature; and adjusting the ambient temperature based in part on the comparison.

In one example, measuring the skin temperature comprises measuring the skin temperature via a first temperature sensor disposed at an inward facing surface of a wearable computing device.

In one example, measuring the ambient temperature comprises measuring the ambient temperature via a second temperature sensor disposed at an outward facing surface of the wearable computing device.

Another aspect of the disclosure provides a method for controlling appliances, comprising: identifying a position of a first appliance in a room; gesturing a first gesture in a direction of the first appliance; identifying the direction of the first direction via a wearable computing device; issuing a controlling command to the first appliance based in part on the identified direction of the gesture.

Another aspect of the disclosure provides a method of generating an alert, comprising: authenticating a first wearer of a first wearable computing device as a first authenticated user; transmitting first biometric data associated with the first wearer; associating the first biometric data with a first profile associated with the first wearer of the first wearable computing device; comparing the first biometric data with a group profile comprising aggregated biometric data from a plurality of distinct wearers of a plurality of distinct wearable computing devices; and generating an alert if the first biometric data falls outside of a predetermined threshold set by the aggregated biometric data.

In one example, the biometric data comprises at least one of heart rate; ECG profile; blood sugar, and blood pressure.

In one example, the plurality of distinct wearers share a common trait, resulting in their aggregation into the group profile.

In one example, the common trait comprises at least one of: age, gender, profession, and location.

Another aspect of the disclosure provides a method of determine a sampling rate of a wearable computing device, comprising: determining an activity level of a wearer of a wearable computing device based at least in part on data from at least one sensor disposed onboard the wearable computing device; comparing the activity level to a predetermined activity threshold; and increasing a first sensor sampling rate if the activity level is above a predetermined activity threshold.

In one example, the method further includes decreasing the first sensor sampling rate if the activity level is below a predetermined activity threshold.

In one example, the predetermined activity threshold comprises an acceleration measurement.

## BRIEF DESCRIPTION OF THE DRAWINGS

The invention description below refers to the accompanying drawings, of which:

FIG. **1**A is a perspective view of a WCD illustrating an exterior window in accordance with some embodiments;

FIG. **1**B is a perspective view of the WCD of FIG. **1**A illustrating an interior window in accordance with some embodiments;

FIG. **1**C is a perspective view of an alternative WCD design of the ring of FIG. **1**A in accordance with some embodiments;

FIG. **2** is an abstract functional diagram illustrating example components within the WCD in accordance with some embodiments;

FIG. **3**A is a view of an exterior window of a WCD with example components exposed in accordance with some embodiments;

FIG. **3**B is a view of an interior window of a WCD with example components exposed in accordance with some embodiments;

FIG. **3**C is a view of the exterior windows of an alternative WCD with example components exposed in accordance with some embodiments;

FIG. **4** is an exploded view of a WCD illustrating a battery and a flexible circuit which are configured to fit inside the housing of the WCD in accordance with some embodiments;

FIG. **5** is a perspective view of the flexible circuit of FIG. **4** in accordance with some embodiments;

FIG. **6** is an exploded view of a WCD with an alternative charging mechanism in accordance with some embodiments;

FIG. **7** is a perspective view of an alternative design of a WCD in accordance with some embodiments;

FIG. **8** is an exploded view of the WCD of FIG. **7** illustrating another alternative charging mechanism in accordance with some embodiments;

FIG. **9**A is a perspective view of a charging device for the ring station in accordance with some embodiments;

FIG. **9**B is an abstract diagram illustrating a partial structure of the charging station of FIG. **9**A in accordance with some embodiments;

FIG. **10** is an example screenshot illustrating a user interface of a mobile application coupled to the WCD and displaying fitness monitoring readings in accordance with some embodiments;

FIG. **11** is an example screenshot illustrating a user interface of a mobile application coupled to the WCD and displaying sensor readings (e.g., for calibration purposes) in accordance with some embodiments;

FIG. **12**A is a perspective view of a wearable computing device (WCD) according to one or more aspects of the disclosure;

FIG. **12**B is a side view of a WCD according to one or more aspects of the disclosure;

FIG. **12**C is a front view of the WCD according to one or more aspects of the disclosure;

FIG. **12**D is a cross section of the WCD along the line A-A of FIG. **12**C;

FIG. **12**E is a perspective view of the internal housing without external potting;

FIG. **12**F is a perspective view of the internal housing with a portion of the external potting removed and showing one or more components and printed circuit board (PCB);

FIG. **13** is a cross section of a WCD according to another aspect of the disclosure;

FIG. **14**A is a cross section of a WCD according to another aspect of the disclosure;

FIG. **14**B is a perspective view of the PCB and stiffener element of FIG. **14**A;

FIG. **14**C is a perspective view of the PCB and stiffener element of FIG. **14**A;

FIG. **14**D shows a cross section of the WCD at a point in time when the PCB is being inserted into the internal space and prior to the application of potting;

FIG. **14**E is a cross section of the WCD of after a potting material has been applied subsequent to the WCD of FIG. **14**D;

FIG. **15**A depicts a perspective view of a WCD according to another aspect of the disclosure;

FIG. **15**B is a side view of the WCD of FIG. **15**A;

FIG. **16**A is an exploded view of a housing and a PCB of a WCD according to one or more aspects of the disclosure;

FIG. **16**B is a cross section of FIG. **16**A along line B-B;

FIG. **16**C is a perspective view of the WCD with potting material;

FIG. **17**A depicts a cross section of a WCD employing charging by concentrated light source according to one or more aspects of the disclosure;

FIG. **17**B depicts a cross section of a WCD employing charging by concentrated light source according to another aspect of the disclosure;

FIG. **17**C is a perspective view of a base assembly and WCD **700** according to one or more aspects of the disclosure;

FIG. **17**D depicts a perspective view of internal components of the base assembly **750** and WCD **700** according to another aspect of the disclosure;

FIGS. **17**E-F depict other CPV configurations according to one or more aspects of the disclosure;

FIG. **17**G is perspective view of a WCD and base assembly with a 1×3 CPV arrangement;

FIG. **18**A depicts a cross section of a WCD **800** employing charging by concentrated light source according to another of the disclosure;

FIG. **18**B depicts a cross section of a WCD employing charging by concentrated light source according to another of the disclosure;

FIG. **19**A depicts a cross section of a WCD employing charging by concentrated light source according to another of the disclosure;

FIG. **19**B depicts a cross section of a WCD employing charging by concentrated light source according to another of the disclosure;

FIG. **19**C depicts a schematic diagram of magnets that can be used in a WCD and/or base assembly according to one or more aspects of the disclosure;

FIG. **19**D depicts a schematic diagram of magnets that can be used in a WCD and/or base assembly according to one or more aspects of the disclosure;

FIG. **19**E is a perspective view of a WCD and a base assembly according to one or more aspects of the disclosure;

FIG. **20**A is a cross section of a WCD engaged with a base assembly **1050** according to one or more aspects of the disclosure;

FIG. **20**B is a perspective view of a PCB **1040***b* with a CPV **1030***b* and ferrous element **1020***b* configuration according to one or more aspects of the disclosure;

FIG. **20**C is a perspective view of a PCB with a CPV **1030***c* and ferrous element **1020***c* configuration according to one or more aspects of the disclosure;

FIG. **20**D is a perspective view of a magnet and a concentrated light source **1070***d* according to one or more aspects of the disclosure;

FIG. **21**A is a schematic view of a WCD showing components used for identifying the wearer of the WCD;

FIGS. **21**B-C are perspective views of a skin surface according to one or more aspects of the disclosure;

FIG. **22**A is a perspective view of a user employing ECG monitoring according to one or more aspects of the disclosure;

FIG. **22**B is a view of a human with an electric pathway though his body according to one or more aspects of the disclosure;

FIG. **22**C is a perspective view of a WCD that can employ ECG monitoring according to one aspect of the disclosure;

FIG. **23**A is a perspective view of the hand of a user in various positions employing the navigational features of the WCD;

FIG. **23**B is a flow chart depicting a method of providing feedback to a user according to one or more aspects of the disclosure;

FIG. **24**A is a schematic diagram of a system **1400** for controlling an environment of a user according to one or more aspects of the disclosure;

FIG. **24**B is a side view of a WCD showing one or more temperatures sensors according to one or more aspects of the disclosure;

FIG. **24**C is a system diagram of a system for controlling home appliances according to one or more aspects of the disclosure;

FIG. **24**D is a flow chart depicting a method of controlling home appliances according to one or more aspects of the disclosure;

FIG. **25** is a perspective view of the hand of a user employing a two-factor authentication technique according to one or more aspects of the disclosure;

FIG. **26**A is a schematic view of a charging apparatus for charging the WCD according to one or more aspects of the disclosure;

FIG. **26**B shows a WCD including an RF antenna and charging circuitry;

FIG. **26**C is a block diagram of the charging apparatus according to one aspect of the disclosure;

FIG. **26**D is a pictorial diagram showing of the WCD according to one or more aspects of the disclosure;

FIG. **27**A is a pictorial diagram and FIG. **27**B is a block diagram of a WCD employing flash storage according to one or more aspects of the disclosure;

FIG. **28**A is a schematic diagram of one or more WCDs performing proximity functions according to one or more aspects of the disclosure;

FIG. **28**B is a schematic diagram of one or more WCDs performing proximity functions according to one or more aspects of the disclosure;

FIG. **29**A is a flow chart depicting a method of initiating gesture input according to one or more aspects of the disclosure;

FIG. **29**B is a chart showing acceleration vs. time as measured by the accelerometer of the WCD;

FIG. **30** is a perspective view of a WCD **2000** employing a reset function;

FIG. **31**A is a perspective view of a WCD including an LED indicator according to one or more aspects of the disclosure;

FIGS. **31**B and **31**C are cross sections along line C-C of a WCD employing an LED indicator according to one or more aspects of the disclosure;

FIG. **32** is flow chart depicting a method of communicating with a near field communication (NFC) device according to one or more aspects of the disclosure;

FIG. **33**A depicts a perspective view of a WCD assembly according to one or more aspects of the disclosure;

FIGS. **33**B-D depict exploded views of the WCD assembly of FIG. **33**A;

FIG. **33**E depicts a cross sectional view of the WCD assembly along A-A;

FIGS. **34**A-B depict a WCD assembly according to one or more aspects of the disclosure;

FIG. **35**A depicts an enclosure or case for storing a WCD according to one or more aspects of the disclosure;

FIG. **35**B is a cross sectional view of the assembled enclosure of FIG. **35**A along the line B-B;

FIG. **35**C depicts a cross sectional view of the assembled enclosure of FIG. **35**B along line A-A;

FIG. **36** depicts an enclosure including air vents according to one or more aspects of the disclosure;

FIG. **37** depicts a method of sizing a finger according to one or more aspects of the disclosure;

FIG. **38** is a pictorial diagram showing a plurality of image perspectives of a user's hand;

FIG. **39** depicts a sizing tool for sizing the finger of a user;

FIG. **40** depicts a sizing tool for sizing the finger of a user according to an alternate example;

FIG. **41** depicts yet another alternate example of a sizing tool for sizing the finger of a user;

FIG. **42** depicts a method of monitoring activity according to one or more aspects of the disclosure;

FIG. **43** depicts a method of determining whether a user is wearing gloves according to one or more aspects of the disclosure;

FIG. **44** depicts a method of securing data onboard the WCD according to one or more aspects of the disclosure;

FIG. **45**A is a timepiece system according to one or more aspects of the disclosure;

FIG. **45**B is a bottom view of the TCD;

FIG. **46** depicts a WCD with a pair of LED indicators disposed at an inward-facing portion of the WCD;

FIG. **47**A is a system for generating and managing alerts according to one or more aspects of the disclosure;

FIG. **47**B depicts a block process diagram for generating and managing alerts according to one or more aspects of the disclosure;

FIG. **47**C is a flow chart depicting a method for generating and managing alerts according to one or more aspects of the disclosure;

FIG. **48**A is a method for variable sampling according to one or more aspects of the disclosure; FIGS. **48**B and **48***c* are graphs depicting one or more aspects of the sample method of FIG. **48**A; and

FIG. **49** is a diagrammatic representation of a machine in the example form of a computer system within which a set of instructions, for causing the machine to perform any one or more of the methodologies discussed herein, may be executed.

## DETAILED DESCRIPTION

The present disclosure describes a wearable computing device (WCD) that enables a wearable fitness monitor(s)/computer(s) which is suitable for prolonged usage with accurate results. The WCD can be in the form of a ring that can be worn on the finger of a human (or animal) user. Although the WCD of the present disclosure is depicted as a ring that can be worn on the finger of a user, other shapes,

designs, and form factors can be utilized for the WCD. For example, the WCD can be in the form of a wrist band, bracelet, necklace, earring, or any other type of wearable accessory. In this regard, references to the finger of a user in the present application can be considered to apply to other portions of a human body depending on the form of the WCD, such as wrist, neck, ear, etc.

The term "coupled" as used herein means connected directly to or connected through one or more intervening components or circuits. Any of the signals provided over various buses described herein may be time-multiplexed with other signals and provided over one or more common buses. Additionally, the interconnection between circuit elements or software blocks may be shown as buses or as single signal lines. Each of the buses may alternatively be a single signal line, and each of the single signal lines may alternatively be buses, and a single line or bus might represent any one or more of a myriad of physical or logical mechanisms for communication (e.g., a network) between components. The present embodiments are not to be construed as limited to specific examples described herein but rather to include within their scope all embodiments defined by the appended claims.

FIG. **1**A is a perspective view of **100** of a WCD **110** illustrating an exterior window **120** in accordance with some embodiments, and FIG. **1**B is a perspective view **102** of the WCD **110** of FIG. **1**A illustrating an interior window **130**.

As previously mentioned, it is recognized in the present disclosure that conventional wearable fitness monitors such as clip-on devices, wristbands, or watch-type monitors still often suffer from inaccuracy mainly because they lack constant and consistent ways to read from the body areas they aim to monitor. It can also be an extra burden for the person to remember and wear such conventional fitness monitors each time the person perform exercises in order to create an accurate history tracking the exercise activities.

Accordingly, the present embodiments of the WCD **110** can function as fitness monitors/computer which is suitable for prolonged usage so as to create accurate results. In addition or as an alternative to fitness monitoring, as will be discussed in more detail below, the WCD **110** can function as a remote input device through, for example, gesture recognition. In some embodiments, the WCD **110** can further function as a sleep monitor, a heart rate sensor, a cardiac monitor a body temperature detector, or the like. It is noted that, for those embodiments which can function as a cardiac monitor (e.g., that measures electrocardiogram (EKG)), it may be necessary to establish a closed loop (e.g., for the electrical measurement of EKG) across the heart. As such, in some of those embodiments, a separate conductive pad can be coupled to the WCD **110** so that a user can pinch the pad with fingers on an opposite hand,

Specifically, in some embodiments of the present disclosure, the WCD **110** can be worn by the user (e.g., on a finger) for fitness, physical activity, biological data monitoring as well as for gestural input or other suitable purposes. As shown in FIGS. **1**A and **1**B, the WCD **110** can include the exterior window **120** on its exterior wall for input/output data transmission and reception, battery recharge, or status indication. The WCD **110** can also include the interior window **130** on its interior wall for various monitoring or sensing activities. The form factor of the WCD **110** allows it to be worn for prolonged hours with constant and consistent contact with the skin area, thereby creating a more reliable and extended recording (e.g., as compared to aforementioned conventional fitness monitors) of the user's fitness activity, physical exercise, as well as health information such as heart rates and body temperature. More implementation details regarding the WCD **110** are discussed below.

FIG. **1**C is a perspective view of an alternative design of the WCD **110** of FIG. **1**A in accordance with some embodiments. As shown in FIG. **1**C, the WCD **112** includes a second exterior window **124** in addition to a first exterior window **122**. The two exterior windows **122** and **124** can include spacing between the two windows **122** and **124** so that the mechanical strength of the housing structure of the WCD **112** may be stronger than that of the WCD **110**, which is shown to include one single exterior window **120**. Further, in some embodiments, radio antennas (e.g., Bluetooth) or other sensitive circuitry can be positioned in the second exterior window **124** away from the first exterior window **122** so that quality of reception may be improved.

FIG. **2** is an abstract functional diagram **200** illustrating example components within the WCD (e.g., WCD **110**) in accordance with some embodiments. As shown in diagram **200**, the WCD **110** can include a processor module **210**, a plurality of sensor modules **220**, a status indicator module **230**, a power generation and management module **240**, a communication module **250**, a memory **260**, and miscellaneous modules **270** (e.g., a real-time clock (RTC) crystal oscillator as illustrated in FIG. **2**). The WCD **110** can also include a battery **280** module that provides electrical power for the WCD **110**. In some embodiments, the battery **280** can be of a lithium-polymer type or a zinc-polymer type. It is noted that modules illustrated in diagram **200** are for purposes of facilitating a better understanding of the present embodiments; other suitable modules may be included in the WCD **110** and are not shown for simplicity. As used herein, the term "components" is considered to generally include any of the modules depicted and/or described in FIG. **2**, as well as any other modules described herein.

It is noted that the aforementioned modules are intended for purposes of enabling the present embodiments, rather than limiting. As such, a person of ordinary skill in the art will understand that the present disclosure covers apparent alternatives, modifications, and equivalents (e.g., combining or separating the modules) made to the techniques described herein. For example, in some embodiments, a portion of the communication module **250** (e.g., the Bluetooth Chip as shown in FIG. **2**) can be combined into the processor module **210**. For another example, one or more modules herein can be combined into one to form a system-on-the-chip (SOC).

The processor module **210** can have generic characteristics similar to general purpose processors or may be application specific integrated circuitry that provides arithmetic and control functions to the WCD **110**. The processor can be any type of processor, such as a processor manufactured by AMtel, Freescale, Nordic Semiconductor, Intel®, AMD®, or an ARM® type processor. The processor module **210** can include a dedicated cache memory (not shown for simplicity). The processor module **210** is coupled to all modules **220**-**270** in the WCD **110**, either directly or indirectly, for data and control signal transmission.

The memory **260** may include any suitable type of storage device including, for example, ROM, such as Mask ROM, PROM, EPROM, EEPROM; NVRAM, such as Flash memory; Early stage NVRAM, such as nvSRAM, FeRAM, MRAM, or PRAM, or any other type, such as, CBRAM, SONOS, RRAM, Racetrack memory, NRAM, Millipede memory, or FJG. Other types of data memory can be employed as such are available in the form factor desired.

In addition to storing instructions which can be executed by the processor module **210**, the memory **260** can also store data generated from the processor module **210**. It is noted

that the memory **260** can be an abstract representation of a generic storage environment. According to some embodiments, the memory **260** may be comprised of one or more actual memory chips or modules. In some embodiments, the memory **260** can function as a temporary storage (e.g., for firmware updates, and/or for avoiding accidental malfunctions (such as so-called "bricking")).

In accordance with one or more embodiments, the sensor modules **220** can include various sub-modules for the WCD **110** to perform different monitoring or sensing activities. A view **302** of the interior window (e.g., window **130**) of a WCD (e.g., WCD **110**) with example components exposed is shown in FIG. **3**B. As shown in the example of FIG. **3**B, the sensor modules **220** can include a temperature sensor **320***a*, a red light emitting diode (LED) **320***b*, a light sensor **320***c*, and an infra-red LED **320***d*. Among the sensors in the sensor modules **220**, those sensors (e.g., sensors **320***a*-**320***d*) which are directly related to biological sign monitoring can be configured and positioned in a way that is close to the skin (e.g., facing the interior window **130** of the WCD **110**). Although not shown in FIG. **3**B for simplicity, the sensor modules **220** can further include sensors that are not directly related to biological sign monitoring; some examples of these sensors include accelerometers, gyroscopes, vibration, sensors (e.g., a magnetometer or a digital compass), or other suitable sensors (e.g., for gesture recognition). The magnetometer can measure the strength and/or direction of a prevailing magnetic field. In this regard, the magnetometer can be used during global positioning and/or navigation. In particular, the magnetometer can be used to measure a directional heading when the WCD is in motion and can supplement position data where the WCD is out of communication range. In one or more embodiments, the accelerometers in the sensor modules **220** can detect movements in multiple (e.g., **3**) dimensions or axes. The accelerometer can measure force of acceleration of the WCD and can measure gestures performed by a user while wearing the WCD. In other examples, the accelerometer can detect acceleration of the user while wearing the WCD. This can permit tracking of activity level, such as steps taken or number of laps swum in a pool.

The temperature sensor can be any type of sensor that detects temperature, such as a thermistor, PTC, NTC, etc. In another example, the temperature sensor can use IR light emitted from an object to calculate a surface temperature of the object in a manner clear to those of ordinary skill in the art.

Together, the processor module **210** and the sensor modules **220** can enable the WCD **110** to perform multiple functions including, for example, pedometer, sleep monitor (e.g., which monitors sleep quality), heart rate sensor, pulse oximetry, skin (and in select embodiments, ambient) temperature. In addition, some embodiments of the WCD **110** can further function as a gesture input device. In particular, the present embodiments recognize that the WCD **110** can detect finger motions or gestures which may be difficult for conventional fitness sensors to detect, such as a tap, a snap, a knock on the table, and the like. In some embodiments, the WCD **110** can utilize the accelerometer to measure the activity level (e.g., arm movement) in conjunction with the measured heart rate to determine if the user is walking horizontally, running, swimming, or climbing stairs. Other activities can be identified by the WCD **110** may include biking or sleeping.

In some embodiments, the WCD **110** can also be programmed to learn particular gestures or physical exercise from the user using, for example, a training mode. For example, the user can instruct (e.g., using a computer or a mobile device of the user) the WCD **110** to enter the training mode and perform the gesture or physical exercise; the WCD **110** can record the readings from the sensor modules **220**, recognize patterns therefrom, and store the result in, for example the memory **260**, so that such gesture or exercise can be recognized by the WCD **110** after the training. The WCD **110** can be configured (e.g., via a mobile application running on a mobile device of the user) so that the recognized gestures can perform functions designated by the user, such as clicks, swipes, unlocks, or media player controls. In one embodiment, the WCD **110** can include near field communication (NFC) chips so that certain functions (e.g., unlocking a smart phone) can be performed when the WCD **110** touches upon or otherwise be detected by another NFC device. In some embodiments, the unlocking function of the WCD **110** can also unlock a user device (e.g., a phone) via the communication module **250** (e.g., Bluetooth) by the WCD **110** transmitting a proper unlock code.

Moreover, the WCD **110** can function as a key or a control device for keyless access to home, automobile, or other suitable user authentication processes. The WCD **110** can also be integrated with games and game consoles so that it can function as an input device to those games and consoles. In some embodiments, the WCD **110** can be adapted for use in medical and home health monitoring, or as a transportation safety device (e.g., that broadcasts emergency messages to relevant authorities). Additional examples of sensors/functionalities of the WCD **110** can include an inertial measurement unit (IMU) (e.g., for more complex gesture recognition, a near-infrared (NIR) spectrometer (e.g., for measuring light absorption and deriving blood glucose/blood alcohol/CO2 content), a Galvanic skin response sensor (e.g., for measuring sweat/nervousness), an electrocardiogram (ECG or EKG), and so forth.

In some embodiments, the processor module **210** can determine (e.g., based on identified physical activities, routine pattern, and/or time) a frequency at which one or more sensors in the sensor modules **220** should operate. Because it is recognized in the present disclosure that the heart rate of a human being typically does not vary too widely (e.g., beyond a certain percentage of what has been previously measured), in some embodiments, the WCD **110** can automatically adjust the sensor modules **220** (e.g., to slow down) so as to save power. More specifically, some embodiments of the WCD **110** can include a phase-locked loop or logic to predict the pulse width by determining lower and upper ranges in which the heart rate is predicted to be, thus only powering up the sensor modules **220** at the time of the predicted heartbeats. For one example, if the WCD **110** determines that the user is at sleep (e.g., based on the heart rate, the body temperature, together with the movements detected by the accelerometer and/or the vibration detector), the WCD **110** can slow down its heart rate detection frequency (e.g., from 1 measurement per second to 1 measurement per 10 seconds) and skip the measurement of several heartbeats because it is unlikely that the heart rate will change drastically during that period. Conversely, if the WCD **110** determines that the user is performing a high intensity physical exercise, the WCD **110** can increase the frequency of monitoring and recording of the sensor modules **220**.

In accordance with one or more embodiments, the WCD **110** also includes various modules coupled to the processor module **210** for, by way of example but not limitation, input/output data transmission, battery recharge, or status indication. A view **300** of the exterior window (e.g., window

120) of a WCD (e.g., WCD **110**) with example components exposed is shown in FIG. **3**A. As shown in the example of FIG. **3**A, the modules configured to face the exterior window **120** of the WCD **110** can include parts from the status indicator module **230**, the power generation and management module **240**, and the communication module **250**.

Specifically, one embodiment of the WCD **110** includes the status indicator module **230** coupled to the processor module **210** to indicate various statuses. In some embodiments, the status indicator module **230** includes a light emitting diode (LED) **330**, such as shown in FIG. **3**A. The LED **330** can be a single red/green/blue (RGB) LED. In other embodiments, the status indicator module **230** can include other suitable types of indicator devices including, for example, a single color LED, an electrophoretic ink (or "e-ink") display, a persistent display, or the like. In accordance with some embodiments, the WCD **110** can utilize the indicator module **230** (e.g., via the RGB LED **330** through the exterior window **120**) to visually communicate with the user. For example, a red color can be displayed (e.g., for a predetermined period of time) by the LED **330** that the WCD **110** needs to be recharged, and a green color can be displayed to indicate that the WCD **110** is fully charged. For another example, a blue color can be displayed when the communication module **250** is in use. In one or more embodiments, the user can program a fitness goal (e.g., a target heart rate) to the WCD **110** so that, for example, a green color can be displayed when the heart rate is below the target, a yellow color can be displayed when the target is reached, and a red color can be displayed when the heart rate is above a certain percentage of the set target. Some embodiments of the WCD **110** include the communication module **250** for wireless data transmission. Particularly, in some embodiments, the communication module **250** includes one Bluetooth chip and a Bluetooth antenna **350**, such as shown in FIG. **3**A. One or more embodiments of the WCD **110** also provides the capability of storing activity logs (e.g., in the memory **260**). More specifically, fitness activities, exercise histories, as well as recorded biological signs such as heart rate and body temperature, can be stored onboard in the memory **260** of the WCD **110**. Each data entry in the activity logs can be time-stamped using, for example, an onboard real-time clock (e.g., which may be included in miscellaneous modules **270**). For power saving and other purposes, the activity log can be downloaded (e.g., via the communication module **250**) when requested by the user. In other embodiments, the activity log can be pushed (e.g., via email or other suitable means) by the WCD **110** to a user device at a time designated by the user. In some embodiments, the memory **260** can store up to a full week worth of activity logs.

The WCD **110** can include the power generation and management module **240** for recharging the battery **280** and for providing electrical power to various modules **210**-**270** in the WCD **110**. Particularly, in some embodiments, the power generation and management module **240** includes one or more concentrated photovoltaic (CPV) cells **340**, such as shown in FIG. **3**A. The CPV cells **340** can be high-efficiency tandem solar cells and can be attached on the flexible printed circuit (e.g., circuit **415**,**515**). Because the small form factor of the embodiments of the WCD **110**, CPV cells **340**, which can absorb more light energy from a wider spectrum of light than the traditional solar cells, are used. In some embodiments, multiple (e.g., **3**) CPV cells **340** can be configured in series to provide sufficient voltage and/or current for charging the battery **280**.

According to some embodiments, the WCD can include one or more sensing or imaging devices that can be any type of device capable of detecting electromagnetic radiation, such as visible light, IR, NIR, UV, etc. In one example, the device is an imaging device, such as a CMOS or CCD camera.

According to some embodiments, the WCD **110** can be placed or docked into a charging station for recharging. A perspective view **900** of an example charging station **910** for the WCD **110** is shown in FIG. **9**A. The charging station **910** can have concentrated light source circumferentially around the WCD **110** so that the user does not have to be concerned with whether the WCD **110** is facing the right direction for charging. Some embodiments of the charging station **910** can include a light distribution means that takes a single light source and distributes the light all around. An abstract diagram illustrating a partial structure of the light distribution means inside the charging device of FIG. **9**A is shown in FIG. **9**B. It is noted that, even with the charging station **910**, for some embodiments, regular outdoor sunlight or other ambient light source can still function as a secondary source of energy so that the CPV cells **340** on the WCD **110** can extend the operational time provided by the battery **280**.

Additionally or alternatively, energy source attached to the power generation and management module **240** can be passive; for example, some embodiments provides that a clip with a concentrator lens can be attached to the WCD **110** in a way such that the power generation and management module **240** can charge the battery **280** using natural sunlight. In an alternative embodiment, gemstone(s) (e.g., sapphire, diamond, or other suitable materials) in the shape of a dome or with faceted protrusion can be configured to concentrate/magnify light energy while also serving as a decorative feature.

In some alternative embodiments, the power generation and management module **240** can include electromagnetic induction charging coil so that a WCD (e.g., ring **610**) can be charged using an inductive charger. FIG. **6** shows an exploded view **600** of such alternative embodiment of WCD with the inductive charging mechanism including the charging coil **640**, as well as battery **680**, housing **612**, and rigid-flex PCBA **615**. However, it is noted that there may be a need to manufacture the inductive charging coil **640** in different sizes that correspond to different ring sizes. Further, it is noted that the efficiency of the electromagnetic induction charging mechanism may be adversely affected by the adoption of a metallic housing. Additionally or alternatively, to avoid multiple sized coils mounted to the edge of the ring, the coil can be placed on the inner or outer sides of the ring by positioning the coil beneath a window in the metal housing of the ring.

In order to achieve optimal power management of the WCD, one or more of the components can be selected to minimize power usage. For example, a processor, memory, or any other component can be selected based on rated power usage. In one example, it may be desirable to select components that draw current on the order of microamps in order to extend the battery life of the WCD and to allow the WCD to perform health/activity monitoring functions between charging sessions.

In still some other alternative embodiments, the power generation and management module **240** can include thermoelectric generator (TEG) modules so that a WCD (e.g., WCD **710**,**810**) can be charged by the difference between the body temperature and the ambient temperature. FIG. **7** is a perspective view **700** of such alternative design, and FIG. **8** is an exploded view **800** of the WCD **710** of FIG. **7**. Also

shown in FIGS. **7** and **8** is an alternative design of the housing for the WCD where the ring includes an outer ring **812***a*, an inner ring **812***b*, and insulators **814***a* and **814***b*. However, it is noted that utilizing TEGs for charging the battery may be less than ideal since the difference between body temperature and ambient temperature might not be great enough to fully charge the battery, and that in many occasions (e.g., during sleep), the temperature difference needed for TEG to generate electricity may quickly disappear (e.g., since the WCD **710**, **810** may be covered inside the comforter).

The battery can be any type of battery, such as a rechargeable battery. The battery can be a thin, flexible lithium ceramic chemistry battery. In another example, the battery can be a circular formed lithium polymer or lithium ion battery. The battery can provide power to any of the components described above. In one example, the battery can be a lithium cell integrated directly with the flexible PCB described above. Other implementations can integrated the battery directly onto the housing to reduce the volume of space taken up by battery packaging.

The WCD can also include one or more polymer or piezo actuators for providing appropriate haptic or physical feedback and alerts to a user while the user is wearing the ring. The piezo actuator can also provide audible feedback to a user.

As previously mentioned, the WCD **110** can be used with a software application (e.g., a mobile phone application for the Apple iOS or the Google Android OS) which can run on the user's computing device (e.g., a mobile device such as a smart phone). Specifically, the software application can facilitate the mobile device of the user to couple to the WCD **110** (e.g., via the communication module **250**) for data communication, such as downloading activity logs, changing configuration and preferences, training the WCD. The software application can also generate a user interface showing the results or readings from the health and fitness tracking performed by the WCD **110**. FIG. **10** is an example screenshot illustrating such user interface **1000** displaying fitness monitoring readings in accordance with some embodiments.

Further, the WCD **110** can be used for gesture input, and the software application can facilitate the user to customize gesture input and control. FIG. **11** is an example screenshot illustrating such user interface **1100** displaying sensor readings (e.g., for calibration purposes) in accordance with some embodiments. In one or more embodiments, the WCD **110** can also be used directly with other Bluetooth enabled devices such as electronic locks or keyless car entry. In other examples, the WCD **110** can also control other devices via a smartphone and other Wireless LAN enabled devices such as home automation systems.

FIG. **3**C is a view **304** of two exterior windows of an alternative WCD (e.g., WCD **112** of FIG. **3**C) with example components exposed in accordance with some embodiments. The components **330**, **340**, and **350** shown in FIG. **3**C function similarly to those components described in FIG. **3**A. However, some components (e.g., antenna **350**) can be positioned to face a different exterior window than the exterior window the rest of the components face. This may increase the mechanical strength of the housing structure of the ring, and/or may reduce signal interference among the components.

FIG. **4** is an exploded view **400** showing an exemplary WCD **410** (e.g., WCD **110**) illustrating a battery **480** and a flexible circuit **415** which are configured to fit inside a housing **412** of the WCD **410**. It is recognized by the present disclosure that a human being's finger can come in various different sizes and so should the WCD **410**. In order to reduce the cost of manufacturing different sizes of printed circuits, in some embodiments, the modules **210**-**270** (of FIG. **2**) are formed on a flexible or rigid-flex printed circuit (FPC) board, an example **500** of which is shown as FPC **515** in FIG. **5**. In particular, one or more embodiments provide that the FPC **515** and the battery **480** are not specific to a ring size, and that the same circuitry and/or battery can fit a multitude of sizes.

According to some embodiments, the WCD **410** provides a desirable form factor for a user to wear it for a prolonged period of time. The edges and the shape of the WCD **410** can be configured in a way that is comfortable and ergonomic; for example, the finished parts of the embodiments are to be free from burrs and sharp edges. The material which forms the housing portion of the WCD **410** can include medical grade metallic alloys that reduce the likelihood of allergic reactions. Examples of the housing material include stainless steel, tungsten carbide, titanium alloy, silver, platinum or gold.

In the examples shown in FIG. **4**, the U-shape of the ring housing **412** allows for the flexible PCB **415** to be inserted into the edge of the WCD **410**. The windows (e.g., windows **120**, **130**) on the walls of the WCD **410** can align with the operating circuitry to allow, for example, battery charging, Bluetooth connection, and user feedback LED/micro display on the outer wall, and biological feedback sensors (e.g., pulse oximetry, temperature sensor) on the inner wall. In one or more embodiments, the WCD **410** can be completely sealed using potting epoxy. The sealing epoxy can be transparent to allow light to pass through for the CPVs and sensors. In some embodiments, the WCD **410** can be potted with two different compounds. In these embodiments, the body of the WCD **410** can be filled with clear material, and the edge of the WCD **410** can be filled with an opaque material so that different colors can be incorporated (e.g., as a decorative element). It is noted that sealing the assembly using potting epoxy can also bring the additional benefit of making the WCD **410** completely or almost completely waterproof as well as increasing the structural rigidity of the WCD **410**.

## I. Internal Housing/External Potting

FIG. **12**A is a perspective view and FIG. **12**B is a side view of a WCD **1200** according to one or more aspects of the disclosure. The WCD **1200** can be in the shape of a ring and can be worn on any of the five fingers (including the thumb) of (typically) a human user. In this regard, the WCD **1200** can define an interior diameter d**1** and exterior diameter d**2**. The interior diameter d**1** can be defined as the distance between opposing points on the interior surface of the ring, with the interior surface being the portion of the WCD facing the finger of a user while the device is worn by the user. The interior surface of the WCD can generally define a finger space for receiving the finger of the user. The exterior diameter d**2** can be defined as the diameter between opposing points on the exterior surface of the ring, with the exterior surface being the portion of the WCD opposed to the interior surface and facing away from the finger of the user.

The interior diameter d**1** and exterior diameter d**2** can be any size to accommodate any finger size. In one example, d**2** is determined by d**1** plus a thickness of any components and/or flexible circuit boards disposed within the WCD. Additionally, although depicted as being circular, the finger

space of the WCD **1200** can be any shape, such as ovular, elliptical, or the like, to accommodate users with atypical finger profiles. In these examples, the dimensions of the interior and/or exterior diameter may be measured according to other variables, such as length, width, major diameter, minor diameter, etc. By way of non-limiting example, the WCD interior diameter d**1** (the diameter generally defining the ring size) can be in an approximate range of 12 mm to 24 mm so as to accommodate finger sizes ranging from a small child to a larger adult, and on any acceptable finger, including the thumb. The exterior diameter d**2** can also be any reasonable size or shape, and can define an approximate range of between 18 mm and 30 mm. Likewise, the thickness between diameters d**1** and d**2** can vary widely, but can typically reside in an approximate range of 1.5 mm to 3 mm. The width WR of the WCD along the direction of finger extension (finger longitudinal direction) is widely variable, and can be selected, in part to accommodate internal and external components. In a non-limiting example, the width WR is in a range of approximately 3 mm to 8 mm.

The WCD **1200** can include an overall housing **1210** that includes an internal housing **1212** and an external potting or encapsulant **1214**. Together, the internal housing **1212** and external potting **1214** combine to form the overall form factor of the WCD **1200**, in addition to providing a housing for one or more electronic components stored within the housing **1210** of the WCD **1200**, as will be described in greater detail below.

The internal housing **1212** can be formed of any material, such as a nonconductive material, a conductive material, a ferrous material and/or a nonferrous metal, composite material (e.g. carbon-fiber and/or glass fiber composite) a dielectric material, or a combination of any of the above. In one example, the material of the inner housing **1212** is conductive and nonferrous, such as aluminum, titanium, or stainless steel. In other examples, the internal housing can be formed of a polymer, such as plastic. The external potting **1214** can be formed of any material, solid or gelatinous, that can provide resistance to shock and/or vibration and can prevent moisture and/or debris from entering the housing **1210** of the WCD **1200**, such as silicone, epoxy, polyester resin or any other polymer.

In one example, the external potting **1214** can be transparent. In this regard, the transparent external potting can allow electromagnetic radiation, such as visible, IR, or UV light sources from inside the housing **1210** to pass through the external potting **1214** without the need of a window or discontinuity in the external potting **1214** and without changing the optical properties of the radiation. In the same vein, electromagnetic radiation sources, such as visible, IR, or UV light, external to the housing can pass through the external potting **1214** and can be detected by, sensed by, or fall incident upon internal components of the WCD **1200** without the need for a window or discontinuity in the housing and without changing the optical properties of the radiation. In another example, the external potting **1214** can be tinted. The tint can be cosmetic and can prevent the internal components of the WCD to be visible by the user. In this regard, depending on the tint, optical properties of light passing therethough may be slightly changed. For example, certain colors of the light can be filtered and can result in decreased power transmission. The above description regarding external potting **1214** can be applied to any of the pottings described below.

The internal housing **1212** can define a window **1216**. In one example, the internal housing is formed of a material that completely or partially prevents light (or other electromagnetic radiation) from passing through the internal housing **1212**. In this regard, the internal housing **1212** can define the window **1216** to allow for such radiation to pass through the housing **1212**. As shown, the window **1216** can be generally elliptical-shaped, but can be any other suitable shape according to other examples, such as rectangular, circular, ovular, etc. Since the window **116** is defined by the internal housing **1212**, the window **1216** can face the finger of the user while the user is wearing the WCD **1200**, which can provide many advantageous features and implementations, as will be described in greater detail below.

FIG. **12**C is a front view of the WCD and FIG. **12**D is a cross section of the WCD **1200** along the line A-A of FIG. **12**C. As shown, the internal housing **1212** can have a generally U-shaped internal surface **1212***a* to accommodate one or more internal components and can define a pair of flanges **1212***b* and **1212***c*. The external potting **1214** can extend between the flanges **1212***b* and **1212***c* of the internal housing to provide an internal space **1220** to accommodate one or more components. By virtue of the external potting **1214**, the internal space **1220** defined by the internal surface **1212***a* and the external potting **1214** can be hermetically sealed, thereby preventing debris, dust, moisture, or any other unwanted fluids or materials from interacting with the internal components of the WCD **1200**. Although not depicted, the internal components can reside within the internal space **1220**, and the external potting **1214** can be disposed immediately atop the components to provide the seal.

FIG. **12**E is a perspective view of the internal housing **1212** without external potting **1214**. As shown, the internal surface **1212***a* defines a generally U-shaped surface for receiving the components.

FIG. **12**F is a perspective view of the internal housing **1212** with a portion of the external potting **1214** removed and showing one or more components **1230** and printed circuit board (PCB) **1240**. The components and PCB can be constructed as flex circuits, thereby allowing the components **1230** and PCB **1240** to be geometrically configured within the ring shaped internal space **1220**. The PCB **1240** can be any type of flexible material clear to those of skill, such as polyimide, PEEK, etc. Additionally, the PCB could be rigid-flex whereby panels of RF4 are connected together with a flexible substrate.

As shown, the PCB **1240** and the components **1230** can be disposed within the internal space **1220** generally defined by the internal surface **1220***a* and the flanges **1220***b-c*. The PCB **1240** can define one or more folding regions **1242** that allow the PCB **1240** to conform to the circumference and/or perimeter of the internal surface **1212***a*. The PCB **1240** can extend around at least a portion, or up to an entire circumference, of the internal surface **1212***a*. In one example, the size of the internal diameter d**1** of the WCD can determine the portion of the internal surface **1212***a* around which the PCB **1240** extends. Illustratively, for a larger ring size and a larger internal diameter d**1**, the PCB **1240** can extend only a portion (an arc) of the overall circumference, while for smaller ring sizes a greater portion (arc) of the circumference can be employed to accommodate PCB **1240** and the internal components **1230**. The adjacent portions of PCB can form an arc angle therebetween by virtue of the folding regions disposed therebetween, allowing for the PCB to be conform to the internal surface **1212***a*.

II. External Housing/Internal Potting

FIG. **13** is a cross section of a WCD **1300** according to another aspect of the disclosure and illustrative embodi-

ments. In this example, the WCD **1300** includes a housing **1310** that includes an external housing **1312** and an internal potting or encapsulant **1314**. The external housing **1312** includes an internal surface **1312***a* that has a generally C-shaped cross section—but alternate cross section shapes, such shapes with an external notch or groove. The external housing includes flanges **1312***b-c* that extend toward each other, beyond portions of the internal surface **1312***a*, to define a partially enclosed internal space **1320**. In an assembled state, the WCD **1300** can include a battery **1330**, a PCB **1340**, and components **1350**, which can be at least partially or completely disposed within the partially enclosed internal space **1320**. The internal potting **1314** can extend between the flanges **1312***b-c* and can seal the partially enclosed internal space **1320**. The components can be encapsulated by the internal potting **1314**. The PCB **1340** and components **1350** can extend along an inner circumference of the internal surface **1312***a*.

Illustratively, the external housing **1312** can be formed of the same materials as the internal housing **1212** described above, and the internal potting **1314** can be formed of the same materials as the external potting **1214** described above. As also described above, the internal potting **1314** can be transparent and the external housing **1312** can define one or more windows according to one or more aspects of the disclosure.

FIG. **14**A is a cross section of a WCD according to another aspect of the disclosure and illustrative embodiment. In this example, the WCD **1400** includes a housing **1410**, internal surface **1412***a*, an internal or external housing **1412**, an internal or external potting **1414**, an internal space **1420**, a battery **1430**, a flexible circuit **1440**, and one or more components **1450**. This example is similar to the examples described above with respect to FIGS. **12** and **13**, except the addition of a stiffener element **1442** and the flanges **1412***b-c* extend further into the space **1420** toward one another such that the flanges **1412***b-c* overlap with the stiffener element **1442**.

FIG. **14**B is a perspective view of the PCB and stiffener element of FIG. **14**A. As shown in FIG. **14**B, the stiffener element **1442** extends beyond an overall width w of the PCB **1440** and extends wider than a distance between flanges **1412***b-c*. The stiffener element is disposed between folding regions **1444**. The PCB **1440** can include one or more stiffener elements **1442** attached thereto, and the elements **1442** can be disposed periodically (in separated intervals) along a length **1** of the PCB **1440**. As shown in FIG. **14**C, the stiffener element **1442** can be disposed underneath the flexible circuit **1440**, e.g., on a face of the flexible circuit **1440** opposed to the face on which the components **1450** are disposed, and can be permanently or semi-permanently attached thereto. The stiffener element can be implemented in any of the configurations described, and in particular, with either the internal housing/external potting arrangement or the external housing/internal potting arrangement.

The stiffener element **1442** can be formed of any material, such as polyamide or thin FR4, depending on construction of the PCB **1440**. In particular, the material of the stiffener can be chosen to be more or less flexible than the PCB **1440**. In one example, the stiffener element **1442** can be a polyamide stiffener disposed on a back surface of a flexible PCB. In another example, the stiffener element **1442** can be FR4 and can be substantially flush with respect to the flanges **1412***b-c*. In this regard, the stiffener element can extend substantially the distance between flanges **1412***b-c* and may not deform upon insertion into the space **1420**. The stiffener element can include surface features disposed on an edge thereof, with the edge facing one of the flanges **1412***b-c*. The surface features can include a sawtooth profile (e.g., intersecting straight lines at acute angles), or any other type of feature capable of providing an interference fit between flanges **1412***b-c*.

FIG. **14**D shows a cross section of the WCD at a point in time during assembly/manufacture when the PCB **1440** is being inserted into the internal space **1420** and prior to the application of potting **1414**. As shown, the stiffener **1442** contacts the flanges **1412***b-c* of the housing **1410** by virtue of the width w of the stiffener element **1442**. Upon an application of force, the PCB **1440** and stiffener **1442** assembly can be inserted into the internal space **1420**. In this regard, the stiffener element has a predetermined flexibility that allows for a certain amount of flexion, as shown in FIG. **14**D. The flexion allows for the flexible circuit **1440** to be inserted within the internal space **1420** and can prevent the flexible circuit **1440** from being removed or from accidentally falling out once inserted. In this regard, the flexible circuit **1440** is held in place within the space **1420** by virtue of the width of the stiffener element **1442** and the distance between the flanges **1412***b-c*. Once inserted, the potting **1414** can be applied free of the concern of improper positioning of the flexible circuit **1440**.

FIG. **14**E is a cross section of the WCD of after a potting material **1414** has been applied subsequent to the WCD of FIG. **14**D.

III. Inner/Outer Hands

FIG. **15**A depicts a perspective view of a WCD **1500** according to another aspect of the disclosure. In this example, the WCD includes a housing **1510** that includes an internal housing **1512** and an external housing **1514**. The internal housing **1512** can be similar to the internal housing described above with respect to internal housing **1212**, and the external housing can be similar to the external housing described above with respect to external housing **1312**. The internal housing **1512** can include one or more windows **1516** that can allow electromagnetic radiation (e.g. visible and near-visible light) to pass therethrough, allowing it to fall incident upon components disposed within the housing **1510** and allowing EM radiation sources (e.g. visible light, RF, IR, etc.) within the housing to exit the housing.

FIG. **15**B is an exploded view of the WCD **1500**. As shown, the WCD can include internal housing and external housing **1512** and **1514**. The WCD can further include a PCB **1540** and components **1550**. Once the housings **1512**-**1514** are assembled and the PCB **1540** and components **1550** are assembled within space defined between the housings **1512**-**414**, potting layers **1502** and **1504** can be applied to seal the WCD at both sides thereof to ensure a secure seal.

IV. Inner/Outer Hands with U Shaped Window

FIG. **16**A is an exploded view of a housing **1610** and a PCB of a WCD according to one or more aspects of the disclosure. The WCD **1600** comprises a housing **1610** with an integral inner wall and outer wall **1612** and **1614**. The housing can be made of any material, such as any material described above with respect to the internal/external housing structures. In this example, the inner and outer walls **1612**, **1614** each define a window in the shape cutaway portions **1616**. The cutaway portions are bounded on three sides by the walls **1612** and **1614** and unbounded at the other side thereof. The cutaway portions **1616** can be aligned with one another to ensure transmission of radiation into/out of the

housing **1610**. The space **1620** between the inner and outer walls **1612**,**1614** can receive a PCB **1640**, battery, components, etc.

FIG. **16**B is a cross section of FIG. **16**A along line B-B. As shown, the inner and outer walls **1612**,**1614** are directly connected by a floor **1618**. The space **1620** is defined by the space between the inner and outer walls **1612**,**1614** and the floor **1618**.

FIG. **16**C is a perspective view of the WCD with potting material **1630**. As described above, the PCB, battery, and components can be disposed within the space. Once disposed therein, a potting **1630** can be provided atop the components and within the cutaway portion **1616**. The potting **1630** can be transparent to allow for transmission of light through the cutaway portions **1616**.

V. Charging by Concentrated Light Source

According to one aspect of the disclosure, the WCD can be charged by an external concentrated light source, e.g., laser light, laser diode, etc. In this regard, the photovoltaic device described above can include a concentrated photovoltaic element (CPV) that is constructed and arranged to receive concentrated light from the concentrated light source, e.g., laser light from a laser diode, light from a light emitting diode (LED), etc., and converting the received concentrated light into an electric current. The photovoltaic device can also generate power from nonconcentrated light sources, such as office lighting and ambient sunlight. The electric current can be used to charge one or more batteries stored within the housing of the WCD.

FIG. **17**A depicts a cross section of a WCD employing charging by concentrated light source according to one or more aspects of the disclosure. In this example, the WCD **1700** can include a housing material **1710**. The WCD can include a PCB **1720** and a concentrated photovoltaic cell **1730**. The WCD can be positioned adjacent a base assembly or base station **1750**. The base assembly **1750** can be connected to an external power source **1765** and can have internal circuitry **1760** to power one or more concentrated light sources **1770**, e.g., one or more laser diodes and/or one or more LEDs, disposed within the base assembly **1750**. In this example, the concentrated light source **1770** comprises one or more laser diodes.

The base assembly **1750** can define a first opening **1752** at one portion thereof to allow the concentrated light **1780** to exit the housing of the base assembly I **750**. As shown in the diagram of FIG. **17**A, the concentrated light **1780** is generated by the concentrated light source **1770** and exits the housing of the base assembly **1750** via a first opening **1752**. The concentrated light **1780** then enters into the WCD by a second opening **1712** in the housing of the WCD **1700** where it can fall upon the CPV **1730**. Once the concentrated laser light falls upon the CPV **1730**, the CPV **1730** can convert the incident concentrated light into a current that can be used to directly power one or more components within the WCD and/or can be used to charge one or more rechargeable batteries onboard the WCD.

The concentrated light source **1770**, as described above, can be any type of light source that is arranged to generate concentrated light, such as an LED or a laser diode. The concentrated light can be any type of concentrated and/or coherent electromagnetic radiation, such as laser light and/or LED light. The concentrated light can have any desired intensity or wavelength, according to the characteristics of the CPV **1730**.

In one example, the source **1770** can be a 200 mW laser diode that produces red or green laser light. This can generate approximately 80 mW (or typically less) of power in the WCD where the CPV **1730** includes a plurality of groups of photovoltaics configured in series or in parallel with one another. Each group of photovoltaics can include one or more CPV cells. In another example, the CPV can include a single group of photovoltaics.

The base assembly **1750** described above can include additional components that can interact with the WCD **1700**. For example, the base assembly can include one or more antennas that can communicate according to one or more wireless protocols, such as 3G, 4G, WiFi, Bluetooth®, NFC, or the like, for direct or indirect wired or wireless communication with the WCD or mobile device. In addition to the charging methods above, the base assembly can employ inductive charging techniques.

FIG. **17**B depicts a cross section of a WCD employing charging by concentrated light source according to another aspect of the disclosure. In this example, the concentrated light source **1770** comprises an LED. Further, the base assembly comprises an optical element **1790** positioned adjacent to the concentrated light source I **770** for focusing the LED light onto the CPV inside the WCD. The optical element **1790** can be any type of optical element, such as a lens. The lens can be formed of any material, such as glass, plastic, etc., and can be any type of lens, such as concave, convex, piano-concave, piano-convex, etc. In this example, the optical element **1790** includes a piano-concave, with the concave portion facing the concentrated light source **1770**. In the example where the source **1770** is an LED, the LED emits light in many directions. The optical element **1790** can focus the emitted LED light to focus as much of the LED light as possible onto the CPV of the WCD. The optical element **1790** can be disposed at least partially or completely within the first opening **1752**. In some implementations, the optical element may not be necessary due to LEDs with substantially focused light.

FIG. **17**C is a perspective view of a base assembly **1750** and WCD **1700** according to one or more aspects of the disclosure. As shown, the WCD **1700** is in the shape of a ring and the base assembly **1750** includes a post **1754** for receiving the ring. The post **1754** can be cylindrical and can be sized and shaped according to an internal diameter of the WCD in order for the WCD to be received on an external surface of the post. The first opening **1752** of the base assembly **1750** is formed on a portion of the post **1754** such that, when the WCD **1700** is stored on the post, the second opening **1712** can be aligned with the first opening **1752** to ensure alignment of the CPV and the concentrated light source. The base assembly can receive/transmit power and/or data via external input/output **1795**, which can be a DC power input, a USB input connection or any other acceptable connection/form factor.

FIG. **17**D depicts a perspective view of internal components of the base assembly **1750** and WCD **1700** according to another aspect of the disclosure. In this figure, the respective housings of the base assembly and WCD have been omitted, thereby showing a plurality of concentrated light sources **1770**, optical elements **1790**, and a plurality of CPVs **1730** disposed on mounting substrates **1775** on a PCB. In this example, the WCD can include a plurality of CPVs and the base assembly can include a plurality of sources. This allows for a greater current to be generated during charging and for faster charging times of the WCD. The CPVs and concentrated light sources can correspondingly be disposed in a line, with a constant or variable pitch between

respective elements. In this regard, the optical element can include corresponding concavities with the same pitch.

FIGS. **17**E-F depicts other CPV configurations according to one or more aspects of the disclosure. As shown in FIG. **17**E, the CPVs **1730** can be arranged in a 1×4 array, while FIG. **17**F depicts the CPVs arranged in a 2×2 array. In addition to the examples shown in the above figures, the WCD can include any number of CPVs according to any number of geometric configurations.

FIG. **17**G is perspective view of a WCD and base assembly with a 1×3 CPV arrangement. As shown, the WCD can include a 1×3 array of CPVs and the base assembly can include a corresponding 1×3 array of concentrated light sources. As indicated by the arrow, a user can then rotate the WCD on the base assembly in order to align the respective first and second openings, as well as the CPV and concentrated light sources.

FIG. **18**A depicts a cross section of a WCD **1800** employing charging by concentrated light source **1870** according to another aspect of the disclosure. In this example, the WCD includes an internal/external housing portion **1810** and an internal/external potting portion **1820**, as described above. In this regard, the base assembly **1850** includes a first opening **1852**, but is free of a second opening on the WCD. The concentrated light **1880** passes through the transparent potting portion and falls incident upon the CPV cell **1830**. In this example, the source can be a laser diode.

FIG. **18**B depicts a cross section of a WCD employing charging by concentrated light source according to another of the disclosure. In this example, the concentrated light source **1870** includes one or more LEDs and the base includes one or more optical elements **1890** for focusing the concentrated light **1880**. The LEDs may be of different wavelengths to provide power to two or more junctions in the triple junction CPV cell.

FIG. **19**A depicts a cross section of a WCD **1900** employing charging by concentrated light source **1970** according to another of the disclosure. In this example, the WCD and/or the base assembly **1950** can employ one or more magnetic and/or ferrous materials to ensure alignment between the concentrated light source and the CPV cell. Such alignment can improve charging efficiency of the WCD.

The base assembly includes a first opening **1952** and the WCD includes a second opening **1912** to allow for concentrated light to fall incident upon the CPV **1930**. In this example, the second opening is formed on an external housing portion of the WCD. In this arrangement, the base assembly can charge the WCD from an exterior of the WCD, rather than an internal charging method as identified above.

The WCD can include a ferrous or other suitable (e.g. ferromagnetic) material **1920**, such as steel, disposed within the housing **1910**. In this example, the ferrous material is disposed in a space defined between an internal housing and an external housing. The ferrous material can surround the CPV.

The base assembly can include corresponding magnets **1960** that can cause an attractive force between the WCD and the base assembly into an optimal configuration for charging. The magnets can be disposed within the base assembly and can surround the concentrated light source. The magnets **1960** can be formed of a rare earth material, such as neodymium or any other acceptable material that provides a requisite magnetic field strength.

FIG. **19**B depicts a cross section of a WCD **1900***b* employing charging by concentrated light source **1980***b* according to another of the disclosure. The CPV **1930***b* of the WCD **1900** is charged from an interior portion, such as by a base assembly **1950***b* with a post **1954***b*. Similarly, the WCD can include a ferrous material **1920***b* disposed within the housing **1910***b* and the base assembly **1950***b* can include a magnet **1960***b*.

FIG. **19**C depicts a schematic diagram of magnets **1920***c*, **1960***c* that can be used in a WCD and/or base assembly, including a CPV **1930***d* and concentrated light source **1930***d*, according to one or more aspects of the disclosure. As shown, the magnets and/or ferrous/ferromagnetic materials can be axially polarized, with each having a respective north pole and south pole. In this regard, the WCD can have axially polarized magnets **1920***c* with a south pole S facing toward the base assembly, and the base assembly can have axially polarized magnets **1960***c* with a north pole N facing toward the WCD. The attractive force between the north and south poles can ensure alignment of the CPV **1930***c* of the WCD and the source **1970***c* base.

FIG. **19**D depicts a schematic diagram of magnets that can be used in a WCD and/or base assembly according to one or more aspects of the disclosure. In this example, the base assembly includes axially polarized magnet **1960***d*, with a north pole N facing toward the WCD. The WCD can include ferrous steel **1920***d*, with an attractive force between the ferrous steel and the north pole of the base assembly magnet.

FIG. **19**E is a perspective view of a WCD and a base assembly according to one or more aspects of the disclosure. As shown, the WCD **1900***e* can be received by a post **1954***e* of a base assembly **1950***e*. The respective magnets **1960***e* and/or ferrous materials **1920***e* are shown in phantom to illustrate their positioning with respect to the WCD and base assembly devices and the CPV **1930***e* as well as the concentrated light source **1970***e*.

FIG. **20**A is a cross section of a WCD **2000** engaged with a base assembly **2050** according to one or more aspects of the disclosure. In this example, the magnets **2060** can surround the concentrated light source **2070**, and the WCD can include a ferrous steel **2020**, CPV **2022**, and battery **2024** disposed within an internal/external potting **2014** of the WCD. The ferrous steel **2020** can be disposed on a face of the PCB **2040** and can be encapsulated by the internal/external potting **2014**. The base assembly can include one or more optical elements **2090** for focusing the concentrated light **2080**.

FIG. **20**B is a perspective view of a PCB **2040***b* with a CPV **2030***b* and ferrous element **2020***b* configuration according to one or more aspects of the disclosure. In this example, the ferrous element **2020***b* comprises a steel ring that can surround a CPV **2030***b* and can be disposed on the PCB **2040***b*.

FIG. **20**C is a perspective view of a PCB **2040***c* with a CPV **2030***c* and ferrous element **2020***c* configuration according to one or more aspects of the disclosure. In this example, the ferrous element **2020***c* comprises a plurality of rectangular bars disposed on the PCB. In this way, the ferrous element **2020***c* can be coated to be reflowed onto the PCB.

FIG. **20**D is a perspective view of a magnet **2060***d* and a concentrated light source **2070***d* according to one or more aspects of the disclosure. As shown, the magnet **2060***d* can include a ring that can extend around a circumference of the concentrated light source **2070***d*. The magnetic ring can be attracted to the ferrous steel ring and/or the rectangular ferrous steel examples set forth in **20**A-C above.

In some examples, the WCD can be adapted to uniquely identify the wearer of the WCD using, for example biometric features unique to the user.

FIG. **21**A is a schematic view of a WCD **2100** showing components used for identifying the wearer of the WCD. As

shown, the WCD **2100** can include one or more infrared illumination sources **2110** and an infrared CMOS imaging device **2120**. The finger **2190** can extend through the finger space of the WCD and the IR source **2110** can illuminate a portion of the skin of the finger **2190**. The IR CMOS imaging device **2120** can receive light that has been reflected from the skin surface and produce an image of the skin of the finger **2190**. As shown, the IR source **2110** and the imaging device **2120** are positioned near the interior surface of the WCD, e.g., the surface facing the skin of the finger. The IR illumination can pass through a window provided on the interior housing or can pass through a transparent potting material.

During the imaging process, the WCD **2100** can be rotated about an axis passing through the center of the finger space and along the longitudinal direction of the finger. In this regard, the imager **2120** can capture a larger swath of the skin surface than if the WCD **2100** were held stationary with respect to the finger during the imaging process.

At the time of first use, or any time thereafter, the user can generate a reference capillary map in order to identify himself/herself as the authorized user of the WCD. As described above, the user can rotate the WCD around the finger to capture image data of an analyzed section of skin **2192** and on or more capillaries **2194** of the user currently wearing the WCD. The image data can correspond to an overall analyzed section of the skin **2196** of the wearer. The image data of the capillaries can be used to generate a reference capillary map of the wearer, which can be stored in the memory, such as flash memory or EEPROM, of the WCD.

When the same user puts the WCD on his or her finger after generation of the reference capillary map, the WCD can capture image data of the wearer's skin surface that can be compared to the reference capillary map stored in the memory. In this regard, the user need not rotate the device around the finger. Instead, the WCD can compare a subset of the gathered image data to a corresponding subset of reference capillary map. If there a match, within a predetermine error tolerance, the WCD can uniquely identify the wearer as an authorized user of the WCD and as the unique individual who generated the reference capillary map. Once authorized, the wearer can have access to certain functions, features, data, or other content that is not otherwise available without authorization. In another example, the identification can be a step in a transaction or other type of authorization, such as an electronic payment, bank transaction, etc. If the gathered data does not match the reference capillary map, then the user may be prevented from accessing certain features on the WCD.

Illustratively, the comparison process between sensed capillaries and some or all of the capillary map can be implemented using basic pattern recognition algorithms (processes) instantiated in the electronics of the WCD. Such processes can rely on edge detection and similar techniques that should be clear to those of skill in the art and can be sourced from various commercial vendors of biometric recognition software.

In another example, the illumination can include NIR illumination and can project radiation into the skin of the finger. The reflected NIR illumination can then be analyzed to determine one or more characteristics of the blood, such as blood alcohol levels, blood glucose levels, and blood oxygenation levels. In this regard, the WCD analyzes the reflected radiation to identify wavelengths that were absorbed from the projected radiation by the blood of the user. Techniques and processed used in conjunction with commercially available venous oximeters (for example) can be employed to undertake certain readings.

FIG. **22**A is a perspective view of a user employing ECG monitoring according to one or more aspects of the disclosure. In this example, the user can wear the WCD **2200** on a first finger **2210** of first hand **2220**, and can touch a second finger **2230** of a second hand **2240** to an exterior surface of the WCD **2200**. This can provide an electric pathway **2250** through the body, as shown in FIG. **22**B, allowing for the transmission of electrical current between distant portions of the body.

FIG. **22**C is a perspective view of a WCD that can employ ECG monitoring according to one aspect of the disclosure. In this example, the WCD **2200** includes an internal/external housing **2250** with a conductive pad **2260**. The conductive pad **2260** can be electrically isolated from the external/internal housing **2250** of the WCD, thereby providing distinct and isolated electrical contacts on the WCD. The internal/external housing **2250** can be in electrical communication with the first finger **2210** of the first hand, while the conductive pad **2260** can be in electrical communication with the second finger **2230** of the second hand. In this regard, an electrical path **2250** is formed through the respective hands **2220**, **2240** and through the rest of the user's body, particularly through the chest. In this regard, the WCD can take various electrical measurements of the user, such as ECG. The ECG measurement can include measurements of the various waveforms, such as P-U waveforms. The WCD can store such ECG data in a memory and/or can communicate the data to a wirelessly connected mobile device. In another example, the WCD can employ electrically isolated internal and external housings, such as those described above. In this regard, the conductive pad may not be utilized, and the user can wear the WCD on a first finger and apply the second finger anywhere on the external housing.

The WCD can also serve as a monitor for those who are mobility impaired or who are prone to falls, such as disabled persons and/or retired persons. The accelerometer onboard the WCD detect a fall of the user via a sudden change in acceleration data. The WCD, in conjunction with a mobile device and/or one or more base stations positioned around the home of the user, can determine the position of the user within the house. For example, the mobile device can employ GPS capabilities, and either the mobile device or the base stations can use GPS in combination with WiFi signal strengths to determine the location of the user within the house. The WCD can then issue an alert, either directly or indirectly (via the mobile device or base station) to a third party that a fall has occurred. The alert can be a phone call, text message, e-mail, or any other type of communication. The third party can then take appropriate measures to aid the fallen user.

The WCD can also monitor heart rate and/or temperature, in addition to the other monitored characteristics described above. If any of the monitored characteristics is abnormal, e.g., measured parameters outside of a predetermined threshold range, an alert can be sent to a third party. In some examples, the third party can be a medical health professional, such as a doctor, nurse, caretaker, etc. It is noted that, for those embodiments which can function as a cardiac monitor (e.g., that measures electrocardiogram (EKG)), it can be necessary to establish a closed loop (e.g., for the electrical measurement of EKG) across the heart. As such, in some of those embodiments, a separate conductive pad or other skin-contacting structure/probe can be coupled to the WCD so that a user can pinch the pad with fingers on an opposite hand.

Since the WCD has the form factor of a ring, the WCD is designed to be worn over long periods of time by a user with little to no discomfort or interference. In this regard, the WCD can monitor the above-described, monitored characteristics over long periods of time (e.g. weeks, months, etc.), and determine trends in the data. For example, the WCD can measure heart rate over a long period of time and determine a unique resting heart rate for a user. If the user's heart rate deviates from the resting heart rate, the WCD can be arranged to issue an alert to a third party. In one specific example, the WCD can use appropriate processes to analyze both the trends of monitored characteristics, as well as current accelerometer data. In this way, if a person's heart rate deviates from a resting heart rate, but the accelerometer indicates that the user is exercising and/or engaging in strenuous activity that provides an equivalent workout, then the WCD may not issue an alert in this circumstance.

FIG. **23**A is a perspective view of the hand of a user in various positions employing the navigational features of the WCD. As described above, the WCD can communicate with a mobile device though one or more wireless communication protocols. The mobile device can include a processor and a memory and can execute a map application/process that can provide turn-by-turn walking or driving directions to the user based on the user's GPS location. A portion of those directions can include information regarding heading, distance to travel at that heading, waypoints, and the direction of next turn. By way of the wireless communication, the mobile device can communicate one or more of pieces of information relating to directions, such as the heading. Once the heading is received the WCD, the WCD can give feedback to the user regarding the actual heading measured by the onboard magnetometer and the heading set forth in the direction information. In one example, the feedback can be haptic or physical feedback provided by one or more actuators, such as the actuators **670** described above.

FIG. **23**A depicts a user's hand in various positions of navigation, each hand including a WCD worn thereon. In this example, the heading provided by the mobile device is the heading **2335**, which represents the direction in front of the hand position **2330**. In this regard, if the user gestures, e.g., points a ring finger, in the direction of the correct heading, the WCD **2300** can give feedback to the user indicating the correct heading. The feedback can include, for example, an LED indicator **2310** showing a green visible light. In the example of hand position **2320**, the finger is gesturing in a direction to the left of the correct course **2325**. In this way, the WCD **2300** can provide feedback to correct the heading of the user. Such feedback can include illumination of an LED indicator showing (e.g.) a red visible light. Similarly, hand **2340** is gesturing in direction **2345**, which is to the right of the correct/appropriate direction. The WCD can provide (e.g.) a blue indicator informing the user to change heading.

FIG. **23**B is a flow chart **2300**B depicting a method of providing feedback to a user according to one or more aspects of the disclosure. At block **2310**B, a user can establish a communication link between a WCD and a mobile device. At block **2320**B, the user can generate or request a set of directions at the mobile device, including information/data regarding heading, distance to travel at that heading, and the direction of next turn. At block **2330**B, the mobile device can transmit at least one of the information items/datum regarding heading, distance to travel at that heading, and the direction of next turn. At **2340**B, the WCD can take a measurement of heading by measuring a heading associated with an explicit gesture by the user's finger donning the ring. Such gesture can include pointing in a proposed heading of travel. At block **2350**B, the WCD can compare the measured or proposed heading to the correct heading provided by the mobile device. At **2360**B, the WCD can provide feedback to the user based on the comparison at **2350**B, e.g., if the user is gesturing in the correct direction, a green LED indicator may appear. In other examples, if the gesture is in a direction that does not correspond with the correct direction, a (e.g.) blue or red indicator can appear. In one specific example, indicators representing left and right course alterations can be different so a user can easily discern a correct direction of travel.

FIG. **24**A is a schematic diagram of a system **2400** for controlling an environment of a user according to one or more aspects of the disclosure. As shown, the WCD can be connected, wired or wirelessly, to one or more appliances in the home of a user. The system **2400** can include a WCD **2410**, a thermostat **2420**, a wireless access point (e.g., WiFi router) **2430**, and a mobile device **2440**. The WCD can be wirelessly connected (e.g., link **2415**) to both the thermostat and the mobile device by any type of wireless communication protocol, such as Bluetooth. The access point can be wirelessly connected to the thermostat and the mobile device by any type of wireless communication protocol, such as WiFi. It is noted that a wide range of commercially available appliances, thermostats, lighting controllers, home controllers, and the like, can interface with the WCD using WiFi or another conventional/proprietary communication protocol, as described further below.

The WCD **2410** can include one or more temperature sensors. In one example, the WCD can include at least one internal facing temperature sensor **2410***a* and an at least one outward facing temperature sensor **2410***b*, as shown at FIG. **24**B. The inward facing temperature sensor **2410***a* can be near the skin of a user when the user is wearing the ring, and can therefore measure the skin temperature of the user. The outward facing temperature sensors **2410***b* can be disposed away from the finger of the user, and can therefore be arranged to measure an ambient temperature of the room in which the user currently resides with sufficient thermal isolation from the user's hand and his/her body heat. In particular, in order to ensure accurate ambient temperature measurements, the WCD can employ a combination of multiple light sensors **2410***c* and outward facing temperature sensors **2410***b*. In this regard, the temperature sensor **2410***b* associated with the light sensor **2410***c* that receives the most light can be the most accurate, as it is most likely that this sensor is furthest from the finger or palm of the user. In another example, the WCD can employ multiple outwardly facing temperature sensors **2410***b* and compare the temperature values of each to the inward facing sensor **2410***a*. The WCD can then select the most accurate temperature value from the outward facing sensors.

Based on the measured skin temperature and measured ambient temperature, the WCD can automatically adjust the thermostat **2420** to alter the ambient temperature of the room. In this regard, if a user's skin temperature is too high, the WCD can instruct the thermostat **2420** to lower the ambient temperature. Similarly, if the user's skin temperature is too cold, the WCD can instruct the thermostat **2420** to raise the temperature. The WCD **2410** can instruct the thermostat (and/or an HVAC controller) directly, e.g., via a direct wireless link **2415**, or indirectly, e.g., via one or more of the mobile device **2440** and the access point **2430**. The WCD can also use historic temperature data to develop trend temperature data.

In another example, the WCD can be part of a system **2400**C for controlling home appliances. The system **2400**C can include a WCD **2410**C, one or more home appliances **2420**C, and an access point **2430**C. Such home appliances **2420**C can include, for example, a television, lights, speakers, microwave, range, stove, oven, etc. Each of the home appliances can include an antenna that allows the respective home appliances to communicate wirelessly with one or more access points **2430**C. In one example, the appliances can include a ScenSor DWIO00 chip provided by DecaWave. In this way, the locations of the appliances in the room can be determined to an accuracy of approximately 10 cm. The location of the WCD **2410**C can also be determined, using the above-referenced chip, or by using signal strengths of one or more base stations.

Having established the position of one or more home appliances and the user in a room, the user can make a gesture to control such home appliances **2420**C. For example, the user can point at the TV (while wearing the WCD) in order to turn it on/off. Knowing the position of the user and the position of the TV, the direction of the gesture and the type of gesture can indicate what action to take on which device. The accelerometer and/or magnetometer on the WCD can be used to create a vector to the object to control, and a wireless packet can bet sent to a wireless access point to control the respective appliance.

FIG. **24**D is a flow chart depicting a method **2400**D of controlling home appliances according to one or more aspects of the disclosure. At block **2410**D, the locations of one or more home appliances in a room and/or house can be ascertained/determined. As described above, the appliances can include a processor configured to identify location within a room. At block **2420**D, the location of the WCD is determined. At block **2430**D, the user can make a gesture toward a home appliance to exert control over the home appliance. Such gesture can include a snap, a point, etc. At block **2440**D, the accelerometer and/or magnetometer on the WCD can be used to create a vector to the object to control. At block **2450**D, a wireless packet can bet sent to a wireless access point to control the respective appliance. The access point can then issue the command to the respective appliance.

FIG. **25** is a perspective view of the hand of a user employing a two-factor authentication technique according to one or more aspects of the disclosure.

As shown, the user **2500** is wearing a WCD **2510** and is approaching a locked door **2520** with an access node **2530** associated therewith. The access node **2530** can be a wireless access node of a conventional or custom arrangement, and can communicate wirelessly according to any type of wireless protocol, such as WiFi or Bluetooth. As the user approaches the door **2520**, the WCD **2510** can initiate a communication link, e.g., Bluetooth or WiFi, with the access node **2530**. In this way, the WCD and the access node can engage in one or more handshaking or query procedures to verify the WCD. For example, the access node **2530** can detect a MAC address, IP address, or other alphanumeric identifier associated with the WCD and compare it to a list of authorized users. Such network-based communication processes should also be clear to those of skill.

Once the MAC address or other identifier is verified, the user can engage in a pre-defined gesture **2550** to complete the authentication procedure. The gesture **2550** can be any type of hand and/or finger motion that can be performed by the user. In this regard, the accelerometer or magnetometer can detect the gesture **2550** performed by the user and provide the gesture information to the access node. If the provided gesture information corresponds with an authorized gesture stored at or accessible by the access node, then the user may be granted authorization and the door can be unlocked. The authorized gesture can be a general authorized gesture for all users, or can be a specific gesture authorized only for the particular MAC address.

In addition to a door, the method above can be used to gain access to other features, such as unlocking a mobile phone, unlocking a car door, starting a car. The authentication technique above is advantageous in that it can eliminate extraneous authentication devices, such as key fobs for a car, a door, keypads for entry control, etc., and can provide a secure two-factor authentication technique to avoid unwanted access. More generally any type of keyless entry system (e.g. a keypad, card-reader, keyless lock, etc.) can be equipped with appropriate communication interfaces (RF, IR, etc.) to communicate with the WCD and operate based on a gesture and/or proximity of the user using the techniques described above. The WCD can also be employed generally in this manner to activate or deactivate a residential or commercial alarm system-substituting, for example, for a key fob used for this purpose.

FIG. **26**A is a schematic view of a charging apparatus for charging the WCD according to one or more aspects of the disclosure. As shown, a mobile device **2610** can be received within a case **2620**. The mobile device **2610** can be electrically connected to the case **2620** via a port **2610***a* on the mobile device **2610** and a connector **2620***a* on the case **2620**. As shown in phantom, the case **2620** can include an integrated battery **2630** within the case that can charge the mobile device via the connector or can charge a WCD, as will be described in greater detail below.

The integrated battery can be connected to an antenna **2640** disposed on or within the case **2620** that can emit an RF signal, as shown in the block diagram in FIG. **26**C. The RF signal can have a power of less than 500 mW and a frequency of 13.56 MHz. The RF signal can be emitted in all directions around the case such that it can be received by a WCD in proximity to the case.

FIG. **26**B shows a WCD **2650** including an RF antenna **2660** and charging circuitry **2670**. The RF antenna **2640** can be disposed within the housing **2680** and can receive the RF signal emitted by the case **2620** and convert it to a current that can be used to charge the WCD battery (not shown). This can advantageously allow the user to charge the WCD without removing the WCD from the finger. As shown in FIG. **26**D, the charging can occur whenever the WCD is in close proximity to the case, such as when a user talking on the phone or merely handling the phone. In another implementation, the case can utilize inductive charging to charge the WCD. In this regard, the case can include an induction coil subjected to a predetermined current to produce a magnetic field. A corresponding induction coil within the housing of the WCD can be subjected to the magnetic field to produce a current that can charge the onboard battery in accordance with known electromagnetic principles.

FIG. **27**A is a pictorial diagram and FIG. **27**B is a block diagram of a WCD employing flash storage according to one or more aspects of the disclosure. As described above, the WCD **2700** can include a housing **2710**, an antenna **2720**, and an integrated circuit (IC) **2730** including a flash memory **2740**. The IC and the flash memory can be disposed within the housing **2710**. The flash memory **2740** can be powered by a battery **2750** and connected to the IC **2730**, which can be implemented as a system-on-a-chip (SoC) IC **2760**. The IC can include Bluetooth Low Energy (BLE) capability to allow for communication with another device. The flash

memory can be used to store data, or can be used in any of the authentication techniques described above. The WCD can transmit data stored on the flash memory to another device **2780** via the BLE connection, or can receive data and store the data on the flash memory.

FIG. **28**A is a schematic diagram of one or more WCDs performing proximity functions according to one or more aspects of the disclosure. The WCD can detect a strength of an RF signal received by its antenna, and calculate a distance to the source of the RF signal using a Received Signal Strength Indicator (RSSI). In one example, the RF signal can be from a mobile device, an access point, or another WCD. The use of RSSI can have many applications in proximity detection. For example, the WCD can be placed on a child and can be connected to mobile device held by a parent. If the WCD travels a predetermined distance from the mobile device, the WCD can issue an alert to the mobile device, thereby alerting the parent that the child has wandered too far. In another example, the parent can wear a first WCD and the child can wear a second WCD. The first WCD can alert the parent that a child has wandered too far.

A single user can wear a first WCD **2800** on a first finger on a first hand and a second WCD **2810** on a second finger on a second hand. In this regard, the user can measure the relative distance between the first and second fingers using an RSSI via a wireless link **2830** between the WCDs **2800**, **2810**, such as a BLE connection. This can be used to measure an approximate dimension of an object held in both hands or to estimate a mid-air measurement.

In some examples, a first user can wear a first WCD **2800** and a second user can wear a second WCD **2810**. The RSSI can be collected over a period of time and the processor can analyze the data to develop trends or statistics. For example, the RSSI data can indicate that the first and second users have spent a certain amount of time together and can serve as a relationship monitor.

The WCD can also detect when the first user and second user are holding hands. FIG. **28**B is a schematic diagram of one or more WCDs **2800**, **2810** performing proximity functions according to one or more aspects of the disclosure. Similar to the ECG monitoring techniques described above, a circuit can be formed when the users hold hands **2840** (with the respective hands wearing the WCDs). The circuit can be used to transmit data and/or electrical impulses between the respective WCDs via the circuit. The WCDs can collect data regarding the length of time that the users are holding hands and, in combination with the amount of time spent together, monitor the relationship of the two users. In addition, the WCD can collect data regarding communication between the users, e.g., e-mail, social media, etc. Based on all of the above factors, the WCD can develop a relationship score between respective WCD users, with a higher relationship score indicating more and more frequent interactions.

FIG. **29**A is a flow chart depicting a method of initiating gesture input according to one or more aspects of the disclosure. The WCD can be used to perform one or more commands, or to instruct another device, such as a mobile device, to perform one or more commands. Such commands can include, initiate sleep state of WCD, initiate sleep mode or default mode of WCD, powering off/on of the WCD, turning on/off an LED light of the WCD, powering on/off of a mobile device, placing a phone call on the mobile device, etc. The user can establish one or more custom gestures to initiate any of the commands above. For example, the user can select a command to be customized from a number of commands. Once selected, the user can perform a custom gesture to be associated with that command. In some examples, the user can perform the custom gesture multiple times to allow the WCD to better identify the gesture and to develop error tolerances for registering the gesture.

At block **2910**, the user can perform a first gesture. In this example, the user can perform a finger snap. At block **2920**, WCD can register the gesture, via the accelerometer and/or the magnetometer. At block **2930**, the accelerometer can send an interrupt signal to the processor. At block **2940**, the processor can wake from a sleep or default system state. At block **2950**, the processor can monitor the accelerometer for a second gesture, at which point the user can perform a second gesture. If the second gesture matches a gesture in the gesture command database, then the WCD can perform the associated command. If not, the WCD can return to the sleep state.

FIG. **29**B is a chart **2900**B showing an exemplary graph of acceleration vs. time as measured by the accelerometer of the WCD. As shown at peak **2910**B, the gesture can only be registered if it reaches a predetermined acceleration threshold. If the gesture performed at **2910** meets the threshold, it can proceed to block **2930** where the interrupt procedure is performed.

FIG. **30** is a perspective view of a WCD **3000** employing an illustrative reset function and associated procedure/process. As shown, the WCD **3000** can be removed from the finger of the user in order to initiate a system reset of the WCD. In one example, the system reset can be initiated by spinning about a rotation axis R at a predetermined speed. The predetermined speed can be any value, and in one example is a rotational velocity. Upon performing the reset procedure at the predetermined speed, operation of the WCD **3000** can be interrupted and the onboard components of the **3000** can power off, and revert to factory default settings. Additionally, a series of movements can initiate a rest, such as putting the ring on a table and turning it over several times.

FIG. **31**A is a perspective view of a WCD including an LED indicator according to one or more aspects of the disclosure. As shown, the WCD **3100** can include an internal/external housing **3112** and an internal/external potting **3114**. The WCD can include an LED **3120** that can be visible through the internal/external potting **3114**.

FIGS. **31**B and **31**C are cross sections along line C-C of a WCD employing an LED indicator according to one or more aspects of the disclosure. As described above, the WCD **3100** can have an internal and/or external potting **3114** that can be transparent. This allows light sources within the housing to pass through the potting without changing, or with minimal change to, the optical properties of the light. In this way, a light source **3120**, such as an LED, can be disposed on the PCB **3140** and can be powered at least partially by battery **3130**. The LED can be encapsulated by the potting **3112** and can project light through the potting **3112**. As shown in FIG. **31**B, the LED **3120** can include a vertical LED, while **31**C depicts a right angle LED. The vertical LED can project light along direction L**1**, while the right angle LED can project light along direction L**2**. When light is projected along L**2**, the light can travel around a circumference of the finger of the user.. Note that, according to aspects of the disclosure, the potting can be generally adapted in whole or in part to condition, filter or modify the wavelengths and/or projection qualities of light by for example, embedding lensmatic components, applying light-diffusive additives, light attenuating filter materials, etc.

FIG. **32** is flow chart depicting a method **3200** of communicating with a near field communication (NFC) device according to one or more aspects of the disclosure.

In some examples, the WCD can enable or disable NFC or change the functionality of a NFC device. For example, the WCD can itself engage in NFC with another computing device, or the WCD can be connected via wireless link to a computing device that engages in NFC with a different computing device. In certain existing NFC devices, NFC will connect and begin transmitting data as soon as it is queried. In the present example, NFC is enabled or begin transmitting data exclusively upon performing of a predetermined gesture. However, a variety of other transmission processes can be implemented—for example a periodic chirp or handshake request by the WCD for communication with appropriate devices.

At block **3210**, a NFC capable device is provided. The device can be any type of device, such as a laptop, tablet, mobile device, or dedicated NFC device.

At block **3220**, the WCD initiates a connection with the NFC device. The connection can be a direct connection via NFC, or an indirection connection via an intermediate device. At this point, no data has yet been transmitted between the WCD and the NFC device.

At block **3230**, a user performs a predetermined gesture that is registered by the WCD. The gesture can be any type of gesture, such as a point, a snap, waving the hand, etc.

At block **3240**, data transmission begins between the NFC device and the WCD.

In other examples, the user can perform another gesture to cease NFC communication. The gesture can be the same gesture as described above or a different gesture. Additionally, the user can remove the ring to disable the NFC. Upon donning the ring the user will be prompted by the application on the mobile device to re-authenticate by entering a PIN, whereby the proper PIN results in re-enabling the NFC functionality.

In yet another example, the WCD device employing NFC can be configured on the fly to map to different data sets stored thereon. For example, the WCD device employing NFC can employ data thereon to make purchases, e.g., account information, data to access a building, e.g., a key fob, and data thereon to board public transportation, e.g., smart card, metro card, etc. A user can perform a predetermined different gesture for each of the above data sets to access the data. Once accessed, the WCD device employing NFC can initiate a link with another computing device to initiate a transaction, to open a door, or to board public transportation, etc.

## VI. Optical Element and Attachment Frame

FIG. **33**A depicts a perspective view of a WCD assembly **3300** according to one or more aspects of the disclosure, while FIGS. **33**B-D depict exploded views of the WCD assembly and **33**E depicts a cross sectional view of the WCD assembly along A-A. In this example, the WCD assembly **3300** includes a WCD **3310**, an attachment frame **3320**, and an optical element **3330**. The WCD **3310** can be any of the WCD examples described above or below in the present application.

The attachment frame **3320** is releasably attached to the WCD **3310**. The optical element **3330** is itself releasably attachable to the attachment frame **3320**. In this regard, the attachment frame **3320** provides an attachment interface between the WCD **3310** and the optical element **3330**, thereby allowing the optical element **3330** to be at a fixed position in space with respect to the WCD **3310** or any portion thereof. The attachment frame **3320** can be made of any material, such as a metal, polymer, etc. Any type of polymer can be used, such as thermosetting plastics, thermoplastics, PETE, polycarbonate, polyethylene, LDPE, or any other type of plastic.

The attachment frame can be sized and shaped to fit along the curved surface of the WCD. For example, the attachment frame can have a curved undersurface to allow a flush fit with the curved surface of the WCD. The attachment frame can have any shape, size, or radius of curvature depending on the size and shape of the WCD.

The attachment frame **3320** includes a first retaining a portion **3322** and a pair of second retaining portions **3324**. The first retaining portion **3322** defines a conical recess **3322***a* configured to receive the optical element **3330**, and provides a generally unoccluded pathway for light to pass through the optical element and onto the WCD. Although depicted as defining a conical or frustoconical shape, the recess **3322***a* can be any other shape depending on the shape of the optical element **3330**. Each of the second retaining portions **3324** includes a respective locking feature **3324***a*. The respective locking features **3324** and a extend from the second it retaining portion **3324** toward one another such that a distance between the respective locking features is greater than a distance between the remaining portions of the second retaining portions. As shown in FIG. **33**E, the locking features engage with an inward-facing surface **3350** of the WCD to ensure a secure fit. In one example, the inward-facing surface of the WCD may itself have one or more features **3360** to engage with the locking features of the second retaining portions. Such one or more WCD features can include projected surfaces, recesses, or any other type a feature to allow for engagement with the attachment frame.

The optical element **3330** can be made of any material capable of modifying, e.g., focusing, incident electromagnetic radiation, such as visible light, ultraviolet light, infrared light, or any other type of electromagnetic radiation. In some examples, the optical element **3330** can be constructed from a polymer, such as any of the polymers identified above. In another example, the optical element can be made of glass, quartz, diamond, zirconium, or any other material capable of focusing light. More generally, the optical element **3330** is formed with a general outward appearance simulative of a faceted jewel with an appropriate tint or coloration (including clear/white). The term "jewel" can also be used in the alternative to describe the optical element **3330** herein.

The WCD can include CPV cell **3312** that can be disposed directly underneath the attachment frame **3320** and optical element **3330** when assembled. In other examples, the CPV can be positioned within the housing and can receive electromagnetic radiation via a transparent potting material. In this regard, incident light striking the optical element **3330** can be focused on to the CPV cell to allow for charging of the internal battery of the WCD. The optical element **3330** provides an increased charging efficiency when compared to the CPV exclusively receiving ambient light, since the ambient light is collected/gathered from a wider field, and then focused onto the CPV by the optical element **3330**. In one example, a focal length of the optical element **3330** is different than a distance between the optical element and the CPV. For example, the focal length can be greater than or less than the distance between the optical element and the CPV. This can be advantageous in various aspects of the disclosure so as to avoid the light from focusing at a focal

point directly on the CPV, which could cause damage to the CPV itself by over-concentrating the light at that single point of the overall CPV surface.

FIGS. **34**A-B depict a WCD assembly **3400** according to one or more aspects of the disclosure. In this example, the attachment frame **3420** does not extend to an inward-facing surface of the WCD **3410**, but is instead form entirely on the outside-facing surface of the WCD. In some examples, the attachment frame **3420** can be semi-permanently or permanently affixed to the outward-facing surface of the WCD and can have a plurality of retaining portions (mounting prongs) **3422** that at least partially define a recess **3422***a* for receiving the optical element. As shown in FIG. **34**B, the optical element **3430** is releasably attached to the attachment frame **3420**. This configuration can be particularly desirable, as it exhibits ornamental similarities to a traditional engagement ring while still having the increased functionality of the WCD. Note that while not shown, the mounting prongs can include small hook ends that springably retain the optical element **3430** when attached, but that can release the optical element based upon a prying motion. A customized grasping tool (not shown) can also be employed to remove (and attach) the optical element in this example.

## VII. Enclosure/Packaging

FIG. **35**A depicts an enclosure or case **3500** for storing a WCD according to one or more aspects of the disclosure. As shown, the enclosure **3500** includes a lid **3510** and a base **3520**. The lid **3510** and base **3520** can engage via a recessed portion **3522** formed in the base **3520** to provide a substantially sealed interior environment.

The lid **3510** can be cuboidal in external dimensions, or define any other type of geometric shape that allows sufficient internal volume to contain the WCD. For example a custom design shape (polyhedral, etc.) can be employed. In this example, the top portion **3510** is substantially cuboidal as shown, including rounded edges rather than vertices. The lid can be substantially transparent to allow viewing of the WCD while enclosed therein, and can be made of any type of material, such as a polymer, glass, etc. The lid can also be mounted with pins on a hinge.

The base **3520** can be cuboidal, or any other type of geometric shape. In this example, the bottom portion is substantially cuboidal, including rounded edges rather than vertices as shown. The bottom portion can be made of any material and can be transparent or opaque.

The base **3520** can define a receptacle **3524** for receiving the WCD **3505**. The receptacle **3524** can be sized and shaped to receive the WCD **3505** and in this example is semicylindrical, e.g., a portion of a cylinder. The radius of the semicylinder can be slightly larger than a radius of the WCD in order to accommodate the WCD securely. The receptacle can lined with a soft material to allow for a soft, safe material to receive the WCD, such as a silicone, thermoplastic, fabric, felt, or other material.

FIG. **35**B is a cross sectional view of the assembled enclosure **3500** shown above along the line B-B. As shown, when assembled, the WCD **3505** fits securely within the receptacle **3524**. The interior of the lid **3510** can be sized and shaped to conform to the shape of the WCD such that the WCD is completely surrounded and enclosed by the lid **3510**, while in other examples, the lid **3510** can be sized and shaped to allow for airspace **3514** between the lid surface and the WCD.

FIG. **35**C is a cross section of the enclosure along line A-A. As shown, the lid **3510** can include an integral optical element **3512**. The optical element **3512** can be a lens or any other device to modify, e.g. focus, light that passes therethrough. In this example, the optical element **3512** can be disposed at a predetermined distance away from one or more CPV cells **3507** disposed on the WCD **3505**. This distance d can be measured from the center of the optical element to the CPV cells **3507**, and the optical element can itself have a focal length f. In one example, the distance d can be greater than the focal length f, such that the optical element focuses light at a point above the WCD in the enclosure. In this regard, the light will not focus directly on the CPV cells disposed at the surface of the WCD, thereby avoiding overheating or damage to the CPV cells. In other examples, the distance d can be less than the focal length, which can also prevent light from focusing at a surface of the WCD.

FIG. **36** depicts an enclosure **3600** including air vents **3650** according to one or more aspects of the disclosure. In this example, the enclosure **3600** includes a plurality of vent holes **3650**. The vent holes can be arranged on one or more faces of the lid. The vent holes **3650** can prevent overheating within the enclosure during charging of the WCD by allowing for circulation of convective air current. During shipping, the vent holes **3650** can be covered by an adhesive and/or adhering (peel-off) polymer sheet of conventional arrangement to prevent debris or moisture from entering the enclosure. The enclosure can include a lid **3610**, base **3620**, receptacle **3624**, and optical element **3612** as in the examples set forth above.

## VIII. Sing

FIG. **37** depicts a method **3700** of sizing a finger according to one or more aspects of the disclosure. At block **3710**, the hand of a user can be provided. The hand can be held still in mid-air or alternatively can be resting on a surface.

At block **3720**, a first image is taken of the user's hand from a first perspective. The image can be taken by any type of imaging apparatus, such as a CCD or CMOS camera, a digital camera, a camera associated with a mobile phone, etc. The first image can be stored in a memory.

At block **3730**, a second image is taken of the user's hand at a second perspective. In this regard, the second perspective is different from the first perspective so as to provide a distinct view in the second image of the user's hand. Block **3730** can be repeated any number of times. For example, a third image can be taken of the user's hand at a third perspective. In this regard, the third perspective is different from both the first and second perspectives so as to provide a distinct view in the third image of the user's hand, and so on.

At block **3740**, a size of the user's finger can be derived from the plurality of images taken above. In some examples, as few as two images may be required, while in other scenarios, more than three images may be required, depending on a number of circumstances including image quality, selected perspectives, etc. The size can be derived from the plurality of images by any number of techniques, such as stitching the plurality of images together to generate a 3D typography of the fingers, then using photogrammetry algorithms to identify features on the fingers to determine the appropriate ring size. Furthermore, the touch screen of the smart phone can be used to measure the hardness of tissue by measuring the footprint/impression the fingers make while pressing a finger against the touch screen of a mobile phone.

FIG. **38** is a pictorial diagram showing a plurality of image perspectives of a user's hand **3802**. As shown, per-

spectives **3810**, **3820**, and **3830**, as well as the other perspectives, produce corresponding images (in a strip) **3812**, **3822**, and **3832**. The images can be used to derive a size of the user's finger according to the methods described above.

FIG. **39** depicts a sizing tool for sizing the finger of a user. As shown, the tool **2900** can include a plurality of finger holes **3910-3950**. The tool **3900** can be made of any material, such as plastic, metal, or cardboard.

FIG. **40** depicts a sizing tool for sizing the finger of a user according to an alternate example. As shown, the tool **4000** can include a plurality of finger holes **4010-4050**. The tool **4000** can be made of any material, such as plastic, metal, or cardboard.

FIG. **41** depicts yet another alternate example of a sizing tool for sizing the finger of a user. As shown, the tool **4100** can include a plurality of finger holes **4110-4150**. The tool **4100** can be made of any material, such as plastic, metal, or cardboard. The thickness of the card reflects the thickness of the ring to ensure proper fit. Additionally, the sizing tool is designed such that it can be easily mailed to the user with a standard mail service such as USPS.

Any of the tools **3900**, **4000**, or **4100** can be provided to a user prior to purchase of the ring in order to obtain accurate sizing information prior to purchase. The tools include holes, as shown above, that can come in a plurality of predetermined finger sizes to allow a user to match his or her finger size with the tool. The best match, e.g., closest size that ensures a comfortable fit, can be identified using the tools. Alternatively, the tools can be provided at retail locations to size the finger of the user on site prior to purchase. More generally, a variety of other sizing techniques, such as those employed by conventional jewelers can be employed according to further aspects of the disclosure.

In another embodiment, a packaging or enclosure of the WCD can include a sizing diagram or interface embodied therein to allow a user to size a finger during the purchase process.

FIG. **42** depicts a method **4200** of monitoring activity according to one or more aspects of the disclosure.

At block **4210**, a user can don or place the WCD onto the finger to secure it in the wearing position.

At block **4220**, a user can perform any number of daily activities, such as running on a treadmill, walking, exercising, typing, etc.

At block **4230**, the WCD, contemporaneous with block **3220**, can use one or more sensors to sense the activities of the user. For example, the sensors can detect location, speed, acceleration, orientation, heart rate, etc.

At block **4240**, the WCD, or another computing device, can generate an entry in an activity log at the conclusion of a detected activity. If the activity detected by the sensors has a profile that has not yet been identified, the WCD can prompt the user to identify the activity. For example, the user can identify profiles such as "Run in Central Park," "Typing," "Run on Treadmill," etc. The WCD can associate the identity provided by the user with the activity profile identified by the sensors and store the identified activity in the WCD memory, or any other memory. Later, if the user performs the same activity and the WCD detects the activity profile as being similar to a saved activity, the WCD can identify the activity while the user is performing the activity and save the activity in the activity log. Each of the activities performed can be saved in the overall activity log and can be stored in a memory on the WCD, or other device, for later viewing.

FIG. **43** depicts a method **4300** of determining whether a user is wearing gloves according to one or more aspects of the disclosure. At block **4310**, a user is provided while wearing the WCD, where such user may or may not be wearing gloves.

At block **4320**, one or more light sensors on board the WCD can detect surrounding ambient light. Such light sensors could include, for example, a CPV or other light sensitive element.

At block **4330**, one or more additional measurements maybe made. Such additional measurements can include, for example, an ambient temperature measurement and or a proximity measurement, e.g., detecting proximity of an object to the WCD via reflected electromagnetic radiation in the form of IR light.

At block **4340**, a measured ambient temperature and ambient light measurements are compared to predetermined thresholds. If the ambient temperature measurement is above a certain predetermined temperature threshold and the ambient light measurement is below a certain threshold, it can be determined that the user is wearing a glove over the WCD.

At block **4350**, a measured proximity and ambient light measurements are compared to respective predetermined thresholds. If the proximity measurement is below a certain distance threshold (e.g., determines an item is in close proximity to the WCD) and the ambient light measurement is below threshold, it can determined that the user is wearing a glove over the WCD. In any of the above examples, an intensity of LED indicators of the WCD can be adjusted according to a detected ambient light using an appropriate algorithm or process that compares the ambient light to a scale and adjusts a desired driving current/voltage for the LEDs according to a predetermined formula (e.g. a proportional adjustment using an adjustment coefficient) or scale (e.g. a lookup table). For example, where there is abundant ambient light (e.g., detected ambient light above a predetermined threshold), the intensity of the LED indicators can be increased. In the same way, where there is little ambient light (detected ambient light below a predetermined threshold), the intensity of the LED indicators can be decreased.

In one example, the WCD can detect whether it is removed and or installed on the finger of the user. In this regard, as mentioned above, the WCD can have inward-facing light sensors, CPV, or temperature sensors. When a user installs a ring on his finger the measure of ambient light may decrease or the temperature may increase. Such changes in ambient light and/or temperature can be detected by one or more sensors onboard the WCD and a determination can be made that the user has removed and or installed the ring on his finger.

FIG. **44** depicts a method **4400** of securing data onboard the WCD according to one or more aspects of the disclosure. At block **4410**, a user may don the WCD on the finger. At block **4420**, a user may execute an application on a mobile device, or other computing device, that can be previously associated and authenticated with the WCD. At block **4430**, the user can enter an authorization code into the application running on the mobile device, such as a PIN code. At block **4440** the mobile device may transmit the authorization code to the WCD by any means of communication, such as, wired, wireless, Bluetooth, NFC, etc. At block **4450**, the user wearing the WCD can now be again authenticated and associated with the WCD and can be granted access to certain functions and/or data storage of the WCD. At block **4460** a user may remove the WCD. At block **4470** the WCD can detect that it is removed such as bio detection (including

e.g., biometric identification) techniques described above with respect to inward facing sensor changes, temperature changes, or heart rate decreasing to zero. At block **4480**, the authorization code previously stored on the WCD can be automatically deleted upon detection of removal to avoid unauthorized access to such information by a subsequent wearer or other querying party. Further or alternatively, additional information can be automatically deleted upon removal of the WCD, for example any data and or instructions stored on the onboard memory of the WCD such as personal information, banking information, confidential information, or other sensitive data.

## IX. Timepiece System

FIG. **45**A is a timepiece system **4500** according to one or more aspects of the disclosure. As shown, the timepiece system **4500** can include a conventional timepiece **4510** and a timepiece computing device (TCD) **4520**. The TCD can be any shape, and in this example is in the shape of a cylinder. The radius can be significantly greater than a height of the TCD to provide the shape of a puck. The TCD can have one or more structural and/or functional components, and can be similar to the WCD described above with respect to hardware features, components, sensors, etc. Although depicted as cylindrical, the TCD can have any shape depending on the shape of the conventional timepiece. For example, where the timepiece has a rectangular or square face, the TCD can similarly have a rectangular or square profile.

A top surface **4520***a* of the TCD can include a pressure sensitive adhesive (PSA) layer **4522** to allow for adhesion of the TCD to the under surface of the timepiece **4510**. The TCD **4520** can have a radius or circumference that does not exceed radius or circumference of the face of the conventional timepiece so as not to be seen when a user is wearing the timepiece system **4500**. The TCD can enhance the conventional timepiece with many of the features described above with respect to the WCD such as, heart rate sensing, temperature sensing pedometer, activity sensing, gesture sensing and control, without having to alter the look of the conventional timepiece.

FIG. **45**B is a bottom view of the TCD. As shown, the TCD can include a battery **4540**, any printed circuit board **4550** with one or more components attached thereto (not shown) such as motion sensors, power management circuitry, charging circuitry, etc. As with the WCD, the printed circuit board of the TCD can be overmolded **4560**. The overmold can be transparent or substantially transparent to allow electromagnetic radiation to pass through to be incident upon one or more components of the TCD.

As shown, the TCD can include a light pipe **4524** around the perimeter thereof. The light pipe **4524** can be substantially annular in shape and can be formed in part by the overmold of the TCD. The light pipe can be constructed from a conventional transparent or translucent moldable material (e.g. acrylic, polycarbonate, etc.), and can be arranged to focus ambient light onto a CPV disposed onboard the TCD for additional charging capability. The optical arrangement/geometry of the light pipe can be implemented using skill in the art to achieve the desired optical characteristics. In another example, excess heat generated by the TCD or excess body heat emitted from the skin of the user can be converted to electrical energy via a thermoelectric (TEG) module, such as a Peltier module, disposed onboard the TCD.

The TCD can also include any number of CPV cells, either on a top surface or bottom surface, to allow for charging. For example, a CPV cell can be placed on the underside of the TCD to allow for docking with a charging/docking station.

FIG. **46** depicts a WCD **4600** with a pair of LED indicators **4610-4620** disposed at an inward-facing portion of the WCD. As shown, the WCD **4600** can include a pair of transparent regions **4640-3650** and an opaque region **4630**. The LEDs **4610-3620** can be positioned under the transparent regions **4640-3650** to allow light from the LEDs to exit the WCD. In one example, the LEDs **4610-3620** can create a subtle diffuse glow to the skin to provide a desirable visual effect to user. In another example, a user feedback LED can be placed at an inward facing surface and a second can be placed at an outward facing surface of the WCD. Depending on the circumstances, one of the LEDs may be disabled to save battery life. For example, LEDs that are facing away from a user e.g. facing down or away from user's line of sight, may be disabled. As described above, the WCD can determine its orientation based on onboard sensors, such as the magnetometer, accelerometer, GPS, etc.

FIG. **47**A is a system for generating and managing alerts according to one or more aspects of the disclosure. As shown, the system can include a WCD **4710**A, one or more networks **4720**A, and one or more server computers **4730**A according to one or more aspects of the disclosure. The WCD **4710**A can communicate directly and/or indirectly with the server **4730**A via the network **4720**A. In this regard, data generated and/or stored at the WCD **4710**A can be transmitted to the server **4730**A and vice versa. In one example, such data can include biometric data pertaining to a user wearing the WCD that is detected and stored by the WCD.

FIG. **47**B depicts a block process diagram for generating and managing alerts according to one or more aspects of the disclosure and FIG. **47**C is a flow chart depicting a method for generating and managing alerts according to one or more aspects of the disclosure.

At block **4710**C, and as shown at process block **4710**B, the user is authenticated with respect to the WCD. In this regard, a single user can be associated with a single WCD and can be associated with a predetermine identifier, such as an alphanumeric number. If the user is not authenticated or the authentication process is not conclusive, the WCD may invite the user to retry authentication at block **4715**C until the user is successfully authenticated. In some examples, the WCD may timeout the authentication process, lock the WCD, or place the WCD in safe mode in the event of too many unsuccessful authentication attempts as a security measure.

The user can be authenticated according to any of the authentication methods described in the present application, such as via a unique capillary map, a unique ECG profile, etc.

If the user is authenticated, biometric data can be transmitted to the server at block **4720**C. The captured biometric data **4720**B can be transmitted to the server via network **4720**A, **47222**B

Once received at the server, the biometric data can be aggregated, sorted, categorized, or profiled at block **4730**C and as shown at process block **4730**B. In this regard, a profile (corresponding to the alphanumeric identifier) may be created at a database at the server that stores data for a particular user. The profile can store transmitted biometric data, as well as other data, such as user gender, height, weight, age, family history, disease information, location, etc.

In some examples, identifying information may be removed from the data and/or not transmitted to allow for anonymity and/or to comply with regulations regarding transmission of medical data. The transmitted biometric data can be normalized in order to comply with predetermined data requirements in order to be added to the profile. In one example, a minimum amount of data may be required in order to be considered viable for association with the profile. The biometric data of a single profile can be aggregated, or in other examples multiple profiles can be aggregated simultaneously.

Aggregation of the user's biometric data into a single profile allows for the profile to be visualized or analyzed according to any number of methods. For example, a timeline can be created showing biometric data over a period of time. The data can also be synthesized or analyzed to calculate trend data, or other mathematical features.

Although only one WCD is depicted, it is contemplated that a plurality of WCDs can exist, with each WCD corresponding to a distinct user (and distinct alphanumeric identifier) and therefore resulting in a plurality of distinct profiles at the server. Accordingly, each of the distinct users/WCDs may be authenticated separately according to the methods described herein.

At block **4740**C, once the transmitted data has been associated with the user profile, the updated profile can be correlated with one or more other profiles stored at the server as shown as process block **4740**B. The profiles may be correlated according to any number of correlation standards, such as correlating users with similar traits such as age, gender, location, profession, or by any other data stored at the server. In some examples, one or more of the traits can be used to make such a correlation. The biometric data from the one or more users that are correlated with one another can be combined to form a group profile. The group profile can be the aggregation, average, range, or sum of individual profiles that form the group profile. For example, for a particular group profile, a range of resting heart can be generated by taking the maximum and minimum values of resting heart from the individual profiles. In other examples, an average (and standard deviation or standard deviation of the mean) can be generated for each trait, such as average resting heart rate, average active heart rate, average blood pressure, average blood sugar, average skin temperature, ECG profiles, as well as any other features capable of being detected by the WCD as described above.

At block **4750**C, transmitted biometric data can be compared to the established values from the group profile. In this way, if a user's heart rate deviates by a predetermined threshold (such as by predetermined magnitude or standard deviation), an alert can be generated at process block **4750**B. The comparison process can occur at the server after transmission of the biometric data. In another example, the group profile data can be transmitted to the WCD for comparison at the WCD. This advantageously allows the comparison to be made where the WCD cannot establish a network link. The group profile can be updated on a continuous basis or a predetermined time interval or at each transmission of biometric data.

At block **4760**C, the alert is transmitted to the WCD and displayed to the user at process block **4760**B. The alert can indicate that the user's biometric data has deviated from the profile group and may advise the user to seek medical attention. In another example, the server can directly contact a medical health professional. In the example where block **4750**C occurs at the WCD, transmission of alert information from the server may not be necessary.

The alert at the WCD can be any type of audio or visual indicator, such as an LED, haptic feedback, audible alarm, etc. The indicator may also invite the user to rest, make an appointment with a medical health professional, recommend a particular medication, or suggest certain physical activities that may health condition that caused the alert.

As shown in FIG. **47**B, the authentication **4710**B, aggregation **4730**B, and correlation **4740**B can occur at server **4730**A, which can include a process, memory, and any other features of a general purpose computer. The authentication **4710**B, aggregation **4730**B, and correlation **4740**B can access a database stored at the memory, where profiles, group profiles, and biometric data can be stored.

FIG. **48**A is a method for variable sampling according to one or more aspects of the disclosure. As described above, the processor module of the WCD can determine (e.g., based on identified physical activities, routine pattern, and/or time) a frequency at which one or more sensors in the sensor modules should operate.

At block **4810**A, one or more sensors of the WCD may take one or more measurements. For example, the WCD can detect temperature, heart rate, acceleration, as described above.

At block **4820**A, the WCD can calculate an activity level of a user. For example, the WCD can compare to a number of stored activity profiles (as described above) stored by the user, or can compare the sensor measurements to sensor threshold values corresponding to different activities, such as sitting, running, sleeping etc. In one example, the WCD detect acceleration values over time to generate an activity level for a particular time period.

At block **4830**A, the WCD may compare the identified activity level to a predetermine activity threshold value. In one example, the WCD may categorize the detected activity as either a high level activity or a low level activity. High level activities can include running, swimming, biking etc., while low level activities may include sitting, standing still, or sleeping.

At block **4840**A, the WCD can set a first sample rate for high level activities and at block **4850**A, the WCD can set a second sample rate for low level activities. The first sample rate can be a shorter time interval than the second sample rate, resulting in more data being detected and generated during a set amount of time while the user is active. This allows for increased power efficiency of the WCD while also providing the advantage of generating more data when a user is more active, thereby providing added biometric data for later analysis.

In another example, the sample rate can be scaled according to activity level. For example, the sample rate can be scaled to be directly proportional to heart rate. This results in a shorter time interval for sampling (more frequent data gather) for running than for walking.

As activity level changes, the method above can be repeated a plurality of times at certain intervals in order to quick or abrupt activity changes.

FIGS. **48**B and **48***c* are graphs depicting one or more aspects of the sample method of FIG. **48**A. As shown in FIG. **48**B, the WCD may determine a user is engaging in a high level activity by detecting acceleration values that are above a predetermined threshold value. In this regard, a shorter time interval (more frequent data gathering) can be set. As shown in FIG. **48**C, the user is engaging in a low level activity since the acceleration values are below a predetermined threshold. A longer sample rate (less frequent data gathering) can be set in this instance.

FIG. **49** a diagrammatic representation of a machine in the example form of a computer system **4900** within which a set of instructions, for causing the machine to perform any one or more of the methodologies discussed herein, may be executed. Specifically, FIG. **49** shows a diagrammatic representation of a machine in the example form of a computer system within which instructions (e.g., software or program code) for causing the machine to perform any one or more of the methodologies discussed herein may be executed. In alternative embodiments, the machine operates as a standalone device or may be connected (e.g., networked) to other machines. In a networked deployment, the machine may operate in the capacity of a server machine or a client machine in a server-client network environment, or as a peer machine in a peer-to-peer (or distributed) network environment.

The machine may be a server computer, a client computer, a personal computer (PC), a tablet PC, a set-top box (STB), a personal digital assistant (PDA), a cellular telephone, a smartphone, a web appliance, a network router, switch or bridge, or any machine capable of executing instructions (sequential or otherwise) that specify actions to be taken by that machine. Further, while only a single machine is illustrated, the term "machine" shall also be taken to include any collection of machines that individually or jointly execute instructions to perform any one or more of the methodologies discussed herein.

The example computer system includes a processor (e.g., a central processing unit (CPU), a graphics processing unit (GPU), a digital signal processor (DSP), one or more application specific integrated circuits (ASICs), one or more radio-frequency integrated circuits (RFICs), or any combination of these), a main memory, and a non-volatile memory, which are configured to communicate with each other via a bus. The computer system may further include graphics display unit (e.g., a plasma display panel (PDP), a liquid crystal display (LCD), a projector, or a cathode ray tube (CRT)). The computer system may also include alphanumeric input device (e.g., a keyboard), a cursor control device (e.g., a mouse, a trackball, a joystick, a motion sensor, a touch screen, or other pointing instrument), a storage unit, a signal generation device (e.g., a speaker), and a network interface device, which also are configured to communicate via the bus.

The storage unit includes a non-transitory machine-readable medium on which is stored instructions embodying any one or more of the methodologies or functions described herein. The instructions may also reside, completely or at least partially, within the main memory or within the processor (e.g., within a processor's cache memory) during execution thereof by the computer system, the main memory and the processor also constituting machine-readable media. The instructions may be transmitted or received over a network via the network interface device.

While machine-readable medium is shown in an example embodiment to be a single medium, the term "machine-readable medium" should be taken to include a single medium or multiple media (e.g., a centralized or distributed database, or associated caches and servers) able to store instructions. The term "machine-readable medium" shall also be taken to include any medium that is capable of storing instructions for execution by the machine and that cause the machine to perform any one or more of the methodologies disclosed herein. The term "machine-readable medium" includes, but not be limited to, data repositories in the form of solid-state memories, optical media, magnetic media, or other non-transitory machine readable medium.

## X. Conclusion

It should be clear that the WCD and TCD arrangements described according to various aspects of the disclosure provide a highly versatile and useful item of wearable electronics that is comfortable and convenient to wear, conveniently charged, and weatherproof for all-purpose and all-condition wearing. Various options for style and appearance can be implemented, as well as a variety of storage options. The functions and structure of the device lend themselves to both a ring version and a wrist-worn version. All versions are designed for long-life with minimal maintenance, and are adaptable to interoperate with a variety of networked devices including computers, smartphones, home controllers, security systems, and virtually any other device capable of communicating over a wireless link-including another WCD or TCD.

The foregoing has been a detailed description of illustrative embodiments of the invention. Various modifications and additions can be made without departing from the spirit and scope of this invention. Features of each of the various embodiments described above may be combined with features of other described embodiments as appropriate in order to provide a multiplicity of feature combinations in associated new embodiments. Furthermore, while the foregoing describes a number of separate embodiments of the apparatus and method of the present invention, what has been described herein is merely illustrative of the application of the principles of the present invention. For example, as used herein various directional and orientational terms such as "vertical", "horizontal", "up", "down", "bottom", "top", "side", "front", "rear", "left", "right", and the like, are used only as relative conventions and not as absolute orientations with respect to a fixed coordinate system, such as the acting direction of gravity. Note also, as used herein the terms "process" and/or "processor" should be taken broadly to include a variety of electronic hardware and/or software based functions and components. Moreover, a depicted process or processor can be combined with other processes and/or processors or divided into various sub-processes or processors. Such sub-processes and/or sub-processors can be variously combined according to embodiments herein. Likewise, it is expressly contemplated that any function, process, application, and/or processor here herein can be implemented using electronic hardware, software consisting of a non-transitory computer-readable medium of program instructions, or a combination of hardware and software. Also, while a variety of visible and near-visible radiation sources are described as LEDs, it is expressly contemplated that other types of sources can be employed according to aspects of the disclosure—for example plasma discharge sources and bioluminescent sources, as well as sources that are based upon developing technologies. Electronic circuits and RF components can similarly be based on alternate and/or developing technologies. Accordingly, this description is meant to be taken only by way of example, and not to otherwise limit the scope of this invention.

What is claimed is:

**1**. A wearable computing device, comprising:

a housing comprising an interior wall and an exterior wall of the wearable computing device;

a printed circuit board disposed within the housing;

a plurality of sensors electrically coupled with the printed circuit board, the plurality of sensors configured to acquire data from a user, the plurality of sensors comprising:

one or more light-emitting components configured to emit light associated with two or more wavelengths, wherein the two or more wavelengths include a first wavelength associated with infrared light and a second wavelength associated with visible light; and

one or more light-receiving components configured to receive the light associated with the two or more wavelengths;

one or more processors configured to process the data acquired by the plurality of sensors based at least in part on a reflectance, an absorbance, or both of the received light associated with the two or more wavelengths; and

a communication module communicatively coupled with the plurality of sensors, the one or more processors, or both, the communication module configured to transmit the data acquired by the plurality of sensors, an analysis of the data generated by the one or more processors, or both, to a user device.

**2**. The wearable computing device of claim **1**, wherein the one or more light-emitting components comprise a first light-emitting component configured to emit light associated with the first wavelength, a second light-emitting component configured to emit light associated with the second wavelength, and a third light-emitting component configured to emit light associated with a third wavelength, wherein the first light-emitting component, the second light-emitting component, and the third light-emitting component are physically separated from one another.

**3**. The wearable computing device of claim **1**, wherein the one or more light-emitting components comprise a single light-emitting module configured to emit the light associated with the first wavelength, the second wavelength, and a third wavelength.

**4**. The wearable computing device of claim **1**, wherein the one or more processors are further configured to:

determine a first absorbance of the first wavelength, and a second absorbance associated with the second wavelength; and

determine one or more characteristics of blood of the user based at least in part on the first absorbance and the second absorbance.

**5**. The wearable computing device of claim **4**, wherein the one or more characteristics of the blood of the user comprise a blood alcohol level, a blood glucose level, a blood oxygenation level, or any combination thereof.

**6**. The wearable computing device of claim **1**, wherein the one or more processors are configured to:

determine an ambient light level based at the one or more light-receiving components; and

selectively adjust one or more operational parameters of the one or more light-emitting components based at least in part on the ambient light level, wherein processing the data is based at least in part on selectively adjusting the one or more operational parameters.

**7**. The wearable computing device of claim **6**, wherein the one or more operational parameters comprise an intensity of the light emitted by the one or more light-emitting components.

**8**. The wearable computing device of claim **1**, wherein the one or more processors are configured to:

determine whether or not the user is wearing the wearable computing device based at least in part on the data acquired by the plurality of sensors; and

selectively adjust one or more operational parameters of the plurality of sensors based at least in part on whether or not the user is wearing the wearable computing device.

**9**. The wearable computing device of claim **1**, further comprising:

a feedback component communicatively coupled with the one or more processors, wherein the feedback component is configured to provide feedback to the user based at least in part on the data acquired by the plurality of sensors.

**10**. The wearable computing device of claim **9**, wherein the feedback comprises visual feedback, audible feedback, haptic feedback, or any combination thereof.

**11**. The wearable computing device of claim **1**, wherein the wearable computing device comprises a finger-worn wearable ring device, wherein the one or more light-emitting components comprise a first light-emitting component positioned within the housing of the finger-worn wearable ring device at a first radial position, and a second light-emitting component positioned within the housing of the finger-worn wearable ring device at a second radial position different from the first radial position.

**12**. The wearable computing device of claim **11**, wherein at least one light-receiving component is positioned within the housing at a third radial position that is between the first radial position and the second radial position.

**13**. The wearable computing device of claim **1**, further comprising:

a power management module disposed within a cavity between the interior wall and the exterior wall, the power management module configured to wirelessly transfer energy from an external energy source to a battery of the wearable computing device through the interior wall, the exterior wall, or both.

**14**. The wearable computing device of claim **13**, wherein the power management module comprises an inductive charging component configured to transfer energy from the external energy source to the battery via an inductive charging process.

**15**. The wearable computing device of claim **1**, wherein the housing comprises:

an internal housing component defining the interior wall; and

an external housing component defining the exterior wall, the external housing component coupled to the internal housing component, wherein one of the internal housing component or the external housing component further defines a first side wall and a second side wall that extend between the internal housing component and the external housing component.

**16**. The wearable computing device of claim **15**, wherein the first side wall, the second side wall, or both, are substantially perpendicular to the interior wall, the exterior wall, or both.

* * * * *