US009684130B2

(12) **United States Patent**
Veatch et al.

(10) **Patent No.: US 9,684,130 B2**
(45) **Date of Patent: Jun. 20, 2017**

(54) **FIBER OPTIC CONNECTOR WITH POLARITY CHANGE**

(75) Inventors: **Anthony Veatch**, Morris, CT (US); **John A. Siemon**, Woodbury, CT (US); **Johnny Zheng**, Jiangsu (CN); **Alex Yao**, Shanghai (CN); **Scott Nagel**, Trumbull, CT (US)

(73) Assignee: **THE SIEMON COMPANY**, Watertown, CT (US)

(*) Notice: Subject to any disclaimer, the term of this patent is extended or adjusted under 35 U.S.C. 154(b) by 8 days.

(21) Appl. No.: **14/115,459**

(22) PCT Filed: **May 1, 2012**

(86) PCT No.: **PCT/US2012/035934**

§ 371 (c)(1),
(2), (4) Date: **Mar. 7, 2014**

(87) PCT Pub. No.: **WO2012/151175**

PCT Pub. Date: **Nov. 8, 2012**

(65) **Prior Publication Data**

US 2014/0169727 A1 Jun. 19, 2014

Related U.S. Application Data

(60) Provisional application No. 61/482,265, filed on May 4, 2011, provisional application No. 61/567,726, filed on Dec. 7, 2011.

(51) **Int. Cl.**
G02B 6/27 (2006.01)
G02B 6/38 (2006.01)

(52) **U.S. Cl.**
CPC ***G02B 6/2726*** (2013.01); ***G02B 6/3831*** (2013.01); ***G02B 6/3879*** (2013.01); *G02B 6/3825* (2013.01)

(58) **Field of Classification Search**
CPC G02B 6/3879; G02B 6/3831
See application file for complete search history.

(56) **References Cited**

U.S. PATENT DOCUMENTS

5,123,071 A 6/1992 Mulholland et al.
5,315,679 A 5/1994 Baldwin et al.
(Continued)

FOREIGN PATENT DOCUMENTS

CN 2867293 Y 2/2007
EP 2063497 A1 5/2009
(Continued)

OTHER PUBLICATIONS

European Partial Search Report for application EP 12779744, dated Apr. 15, 2015, 3 pages.
(Continued)

Primary Examiner — Omar R Rojas
(74) *Attorney, Agent, or Firm* — Cantor Colburn LLP

(57) **ABSTRACT**

A fiber optic connector includes a boot receiving an optical fiber; a connector body for receiving the optical fiber and terminating the optical fiber; and a latch coupled to the connector body, the latch for engaging an adapter for receiving the fiber optic connector, the latch repositionable relative to the connector body to enable polarity change of the fiber optic connector without changing a relative position of the connector body and the optical fiber.

24 Claims, 17 Drawing Sheets

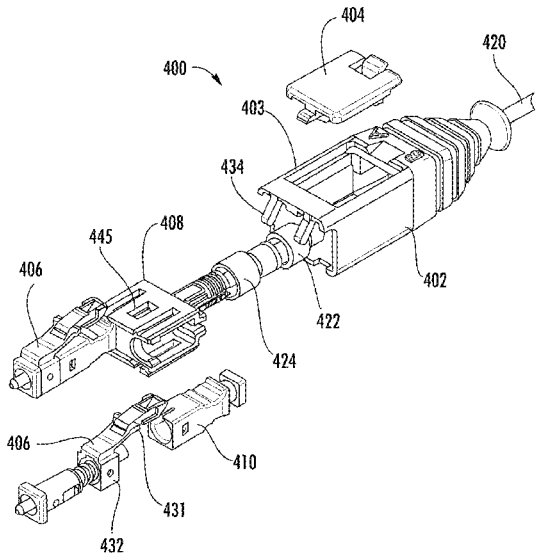

(56) **References Cited**

U.S. PATENT DOCUMENTS

5,335,301	A	8/1994	Newman et al.	
5,481,634	A	1/1996	Anderson et al.	
5,574,812	A	11/1996	Beier et al.	
5,579,425	A	11/1996	Lampert et al.	
5,675,682	A	10/1997	De Marchi	
6,024,498	A	2/2000	Carlisle et al.	
6,076,974	A	6/2000	Carlisle et al.	
6,196,733	B1	3/2001	Wild	
6,250,817	B1	6/2001	Lampert et al.	
6,276,839	B1	8/2001	De Marchi	
6,325,547	B1	12/2001	Cammons et al.	
6,357,934	B1	3/2002	Driscoll et al.	
6,435,732	B1 *	8/2002	Asao et al.	385/78
6,863,556	B2	3/2005	Viklund et al.	
7,163,414	B2	1/2007	Lo et al.	
7,297,013	B2	11/2007	Caveney et al.	
7,326,075	B1	2/2008	Armstrong et al.	
7,421,181	B2	9/2008	Kanou et al.	
7,440,670	B2	10/2008	Kanou et al.	
7,465,180	B2	12/2008	Kusuda et al.	
7,632,125	B2	12/2009	Irwin et al.	
7,641,398	B2	1/2010	O'Riorden et al.	
8,152,384	B2	4/2012	de Jong et al.	
8,152,385	B2	4/2012	de Jong et al.	
8,221,007	B2	7/2012	Peterhans et al.	
2003/0220008	A1	11/2003	Viklund et al.	
2004/0247252	A1	12/2004	Ehrenreich et al.	
2005/0058404	A1	3/2005	Ngo	
2006/0049826	A1	3/2006	Daneman et al.	
2006/0089039	A1	4/2006	Caveney et al.	
2008/0226237	A1	9/2008	O'Riorden et al.	
2009/0047818	A1	2/2009	Irwin et al.	
2009/0245732	A1	10/2009	Murano	
2010/0220961	A1 *	9/2010	de Jong et al.	385/77
2011/0091159	A1	4/2011	de Jong et al.	

FOREIGN PATENT DOCUMENTS

EP	2144100	A1	1/2010
JP	2003526116	A	9/2003
WO	2004065999	A2	8/2004
WO	2012054174	A1	4/2012
WO	2015103783	A1	1/2014

OTHER PUBLICATIONS

International Preliminary Report on Patentability for application PCT/US2012/035934, dated Mar. 25, 2014, 6 pages.

Office Action from the Taiwan Intellectual Property Office for application 10421551940, Nov. 19, 2015, 9 pages.

Chinese Office Action for application CN 201280020179.6, dated Sep. 30, 2016, 10 pages.

* cited by examiner

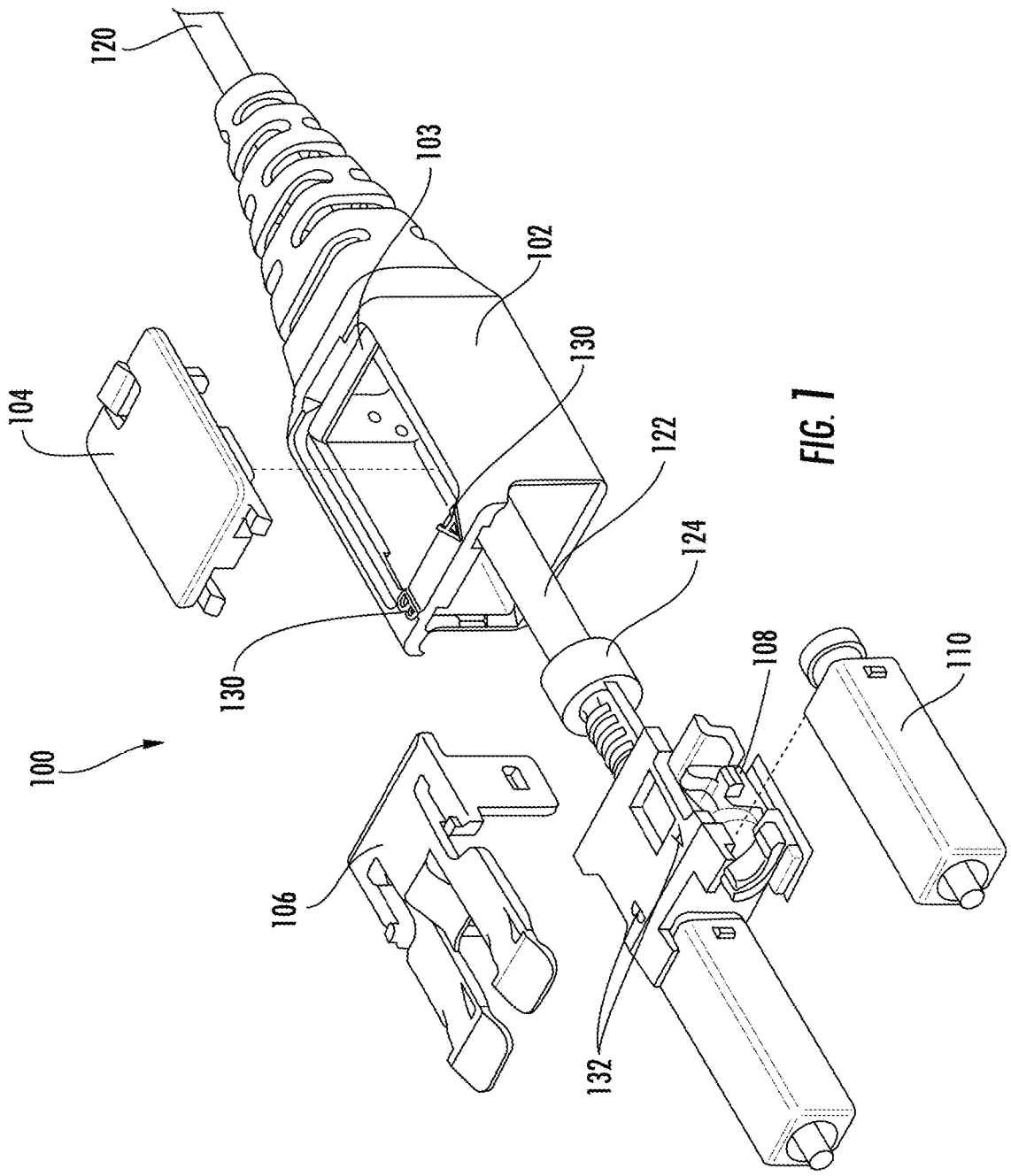

FIG. 1

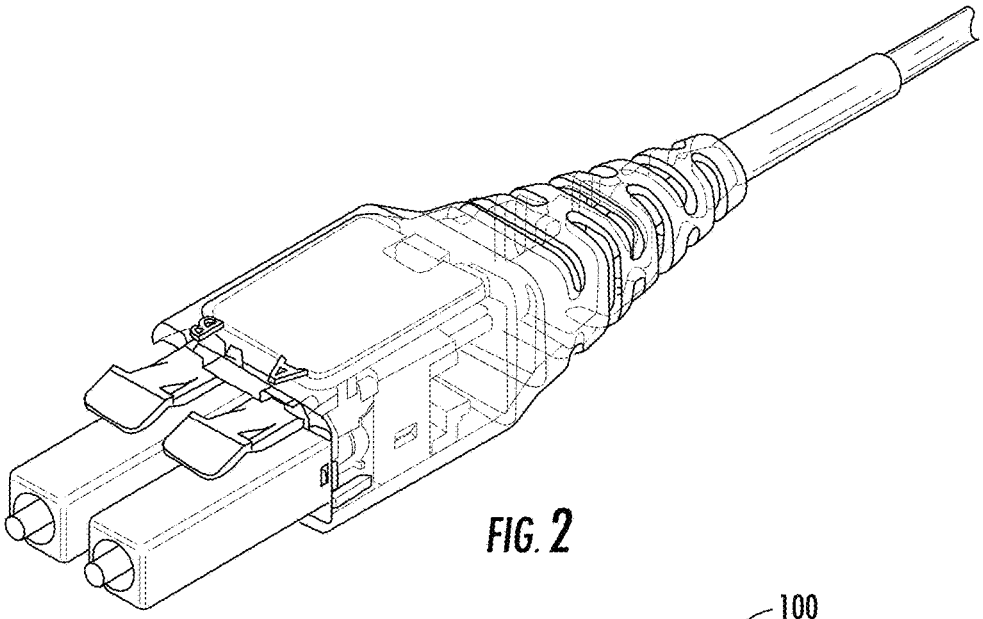

FIG. 2

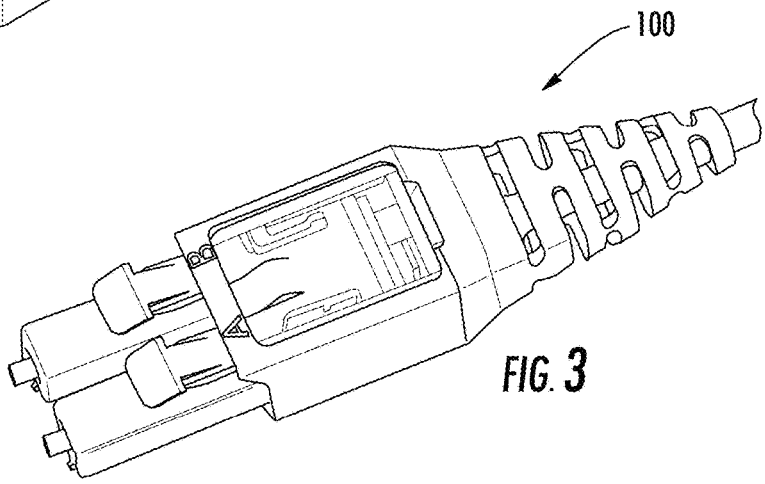

FIG. 3

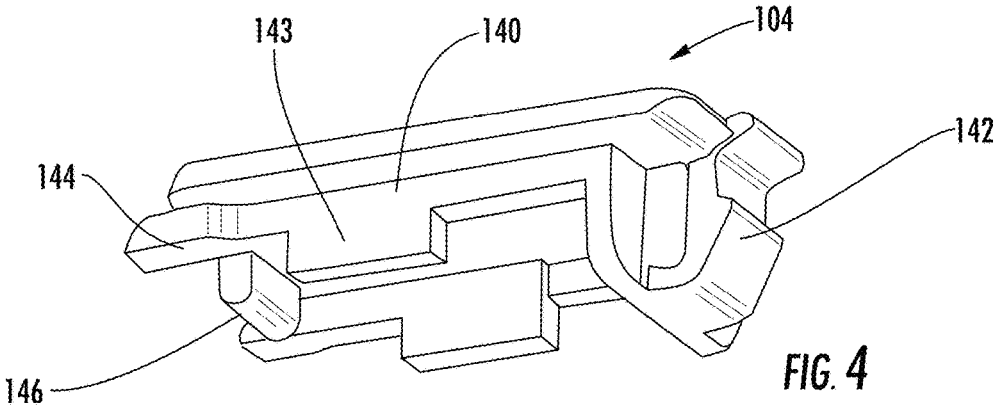

FIG. 4

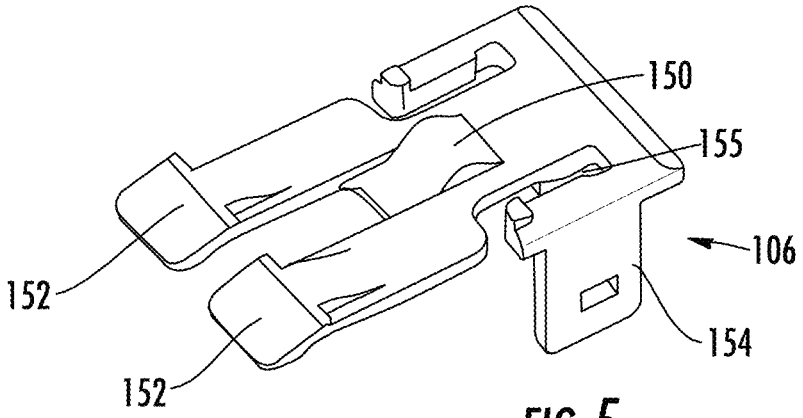

FIG. 5

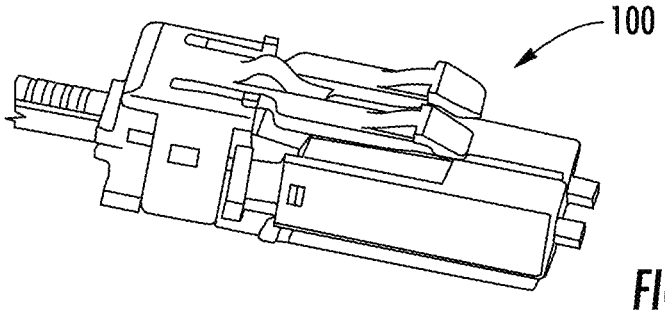

FIG. 6

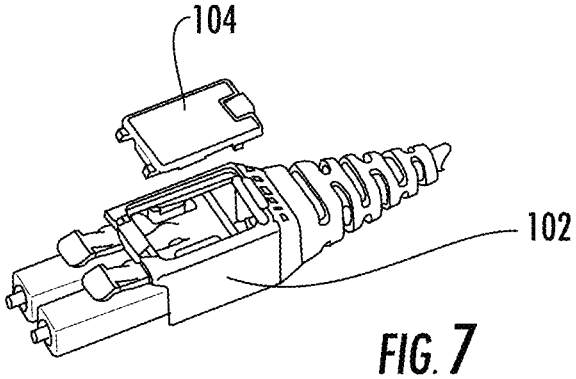

FIG. 7

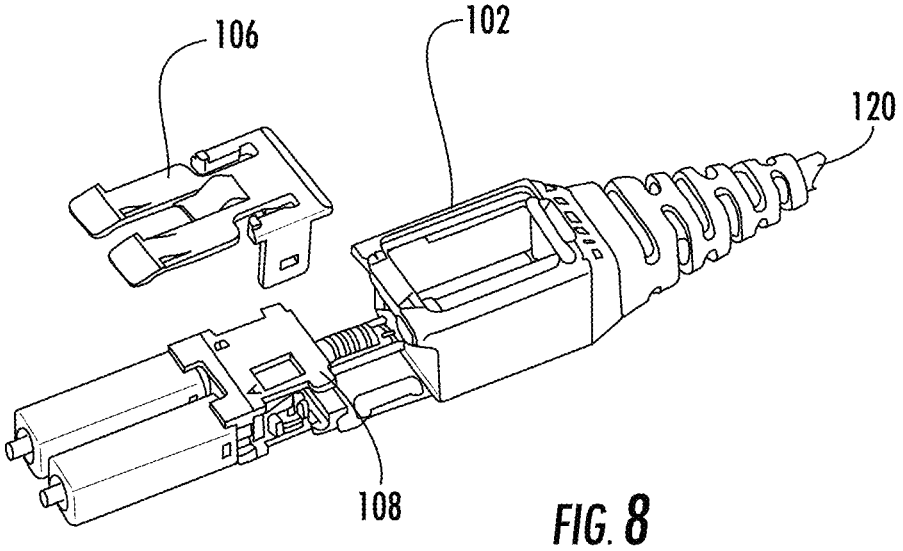

FIG. 8

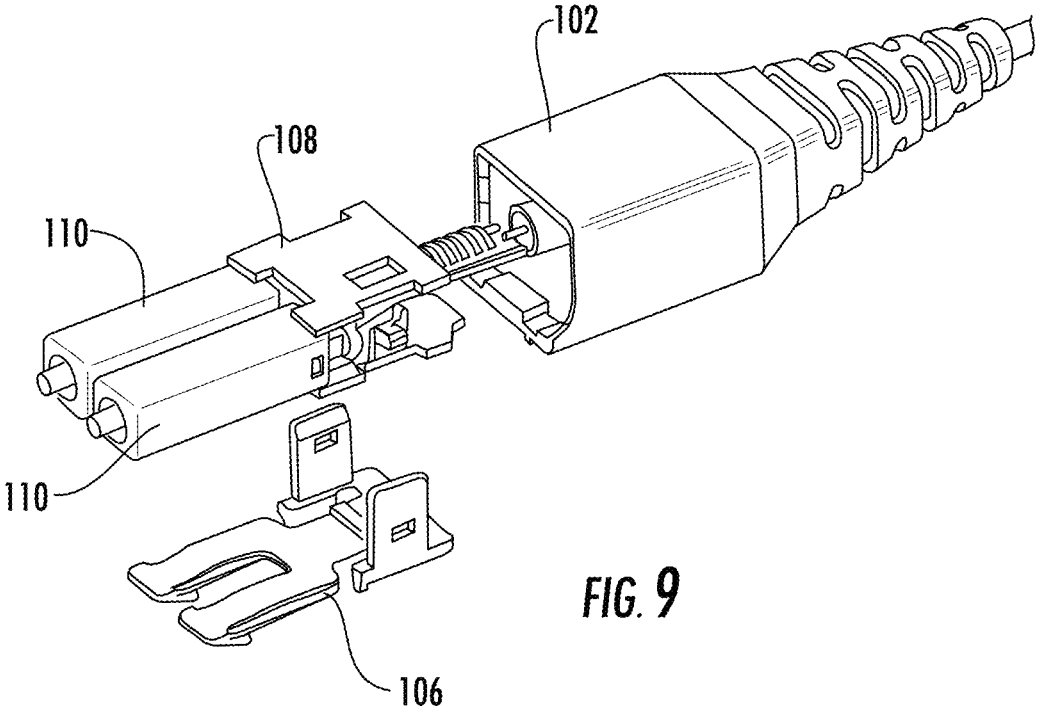

FIG. 9

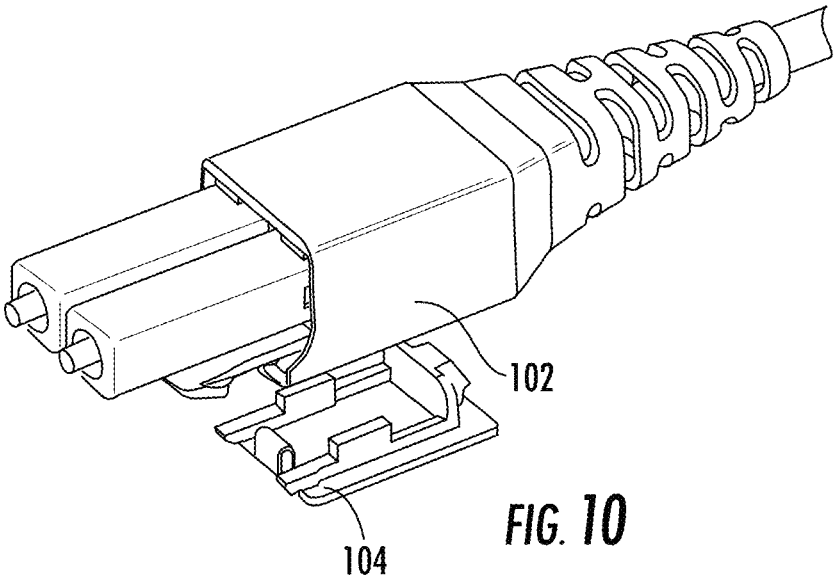

FIG. 10

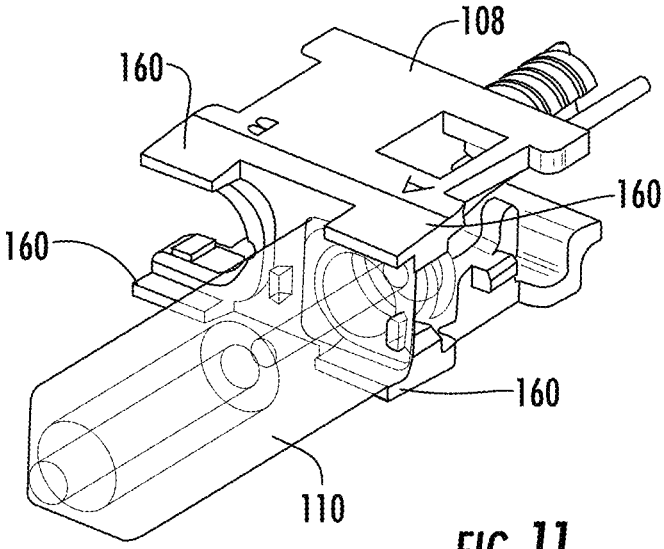

FIG. 11

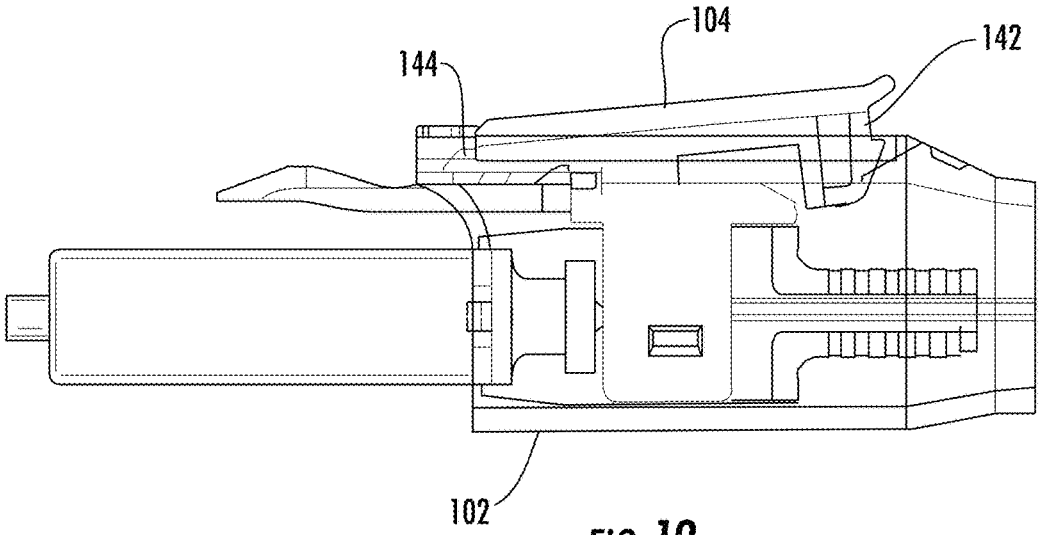

FIG. 12

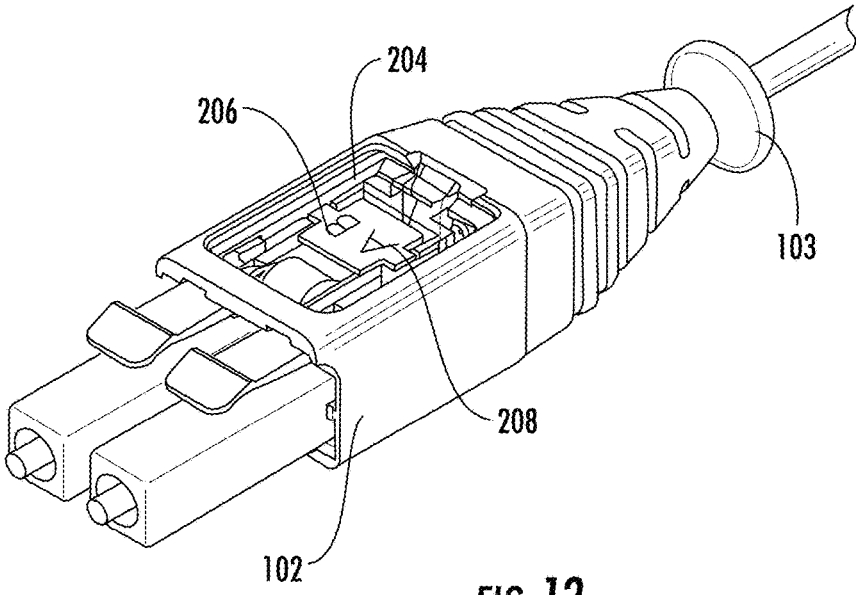

FIG. 13

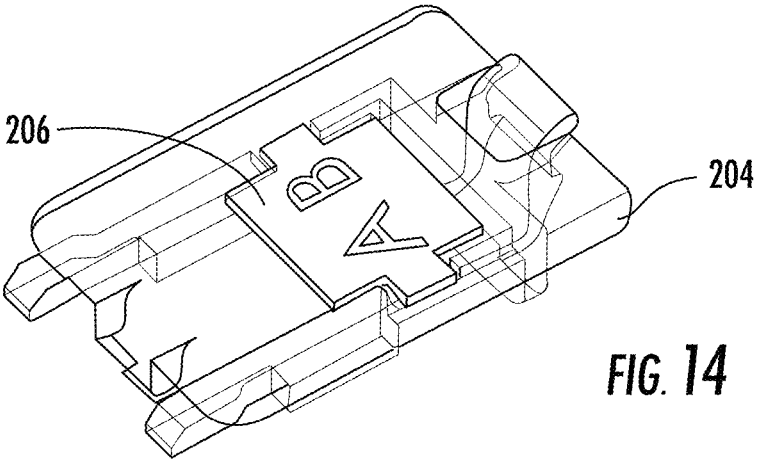

FIG. 14

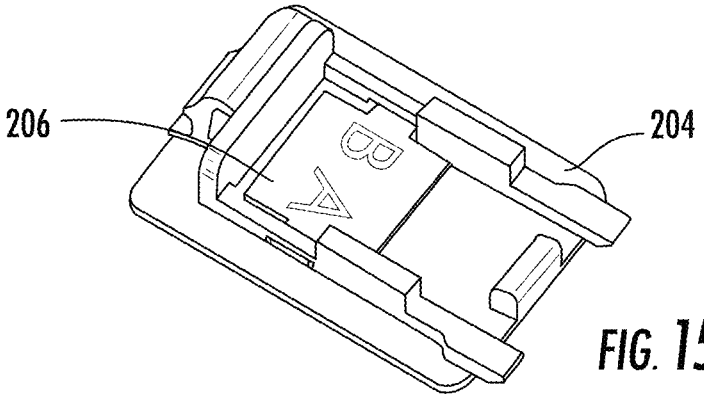

FIG. 15

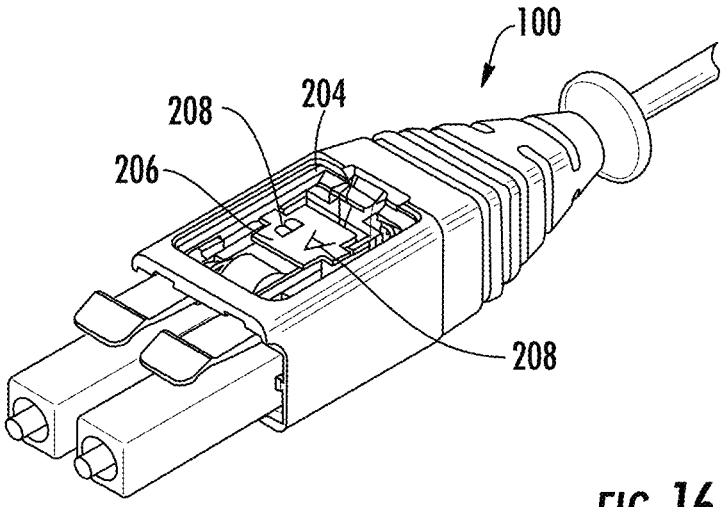

FIG. 16

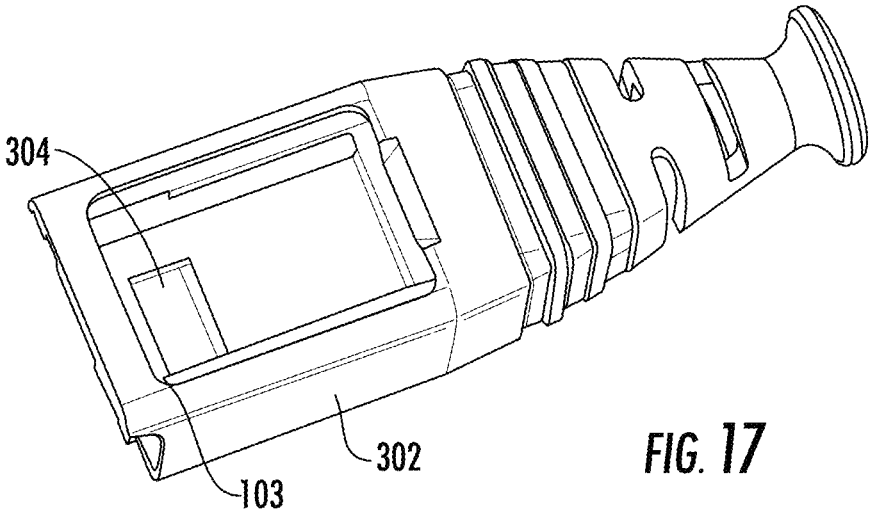

FIG. 17

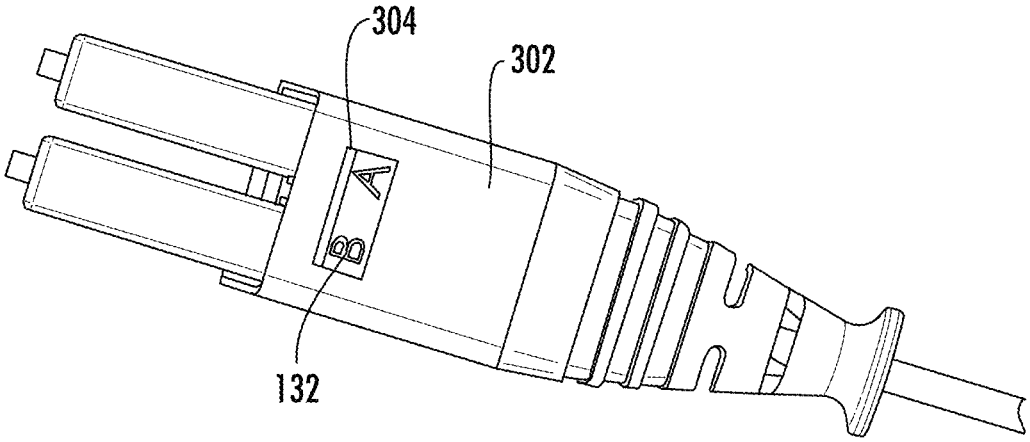

FIG. 18

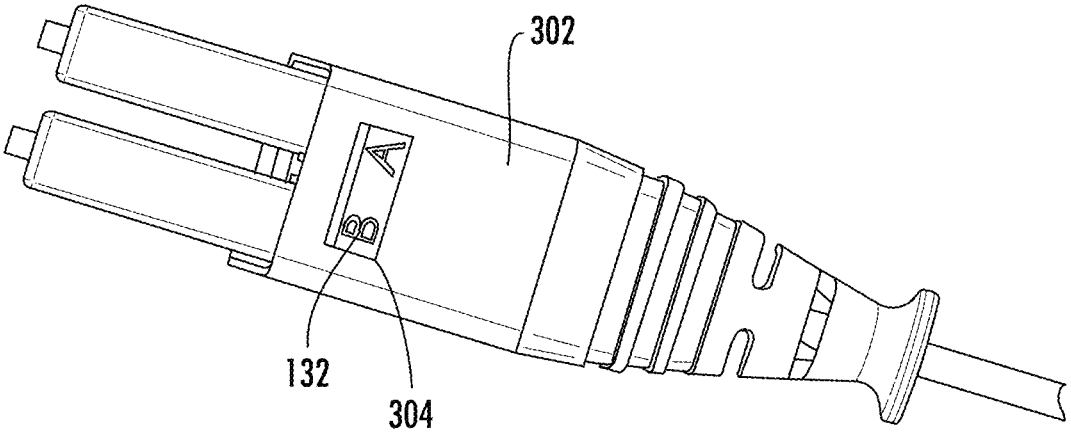

FIG. 19

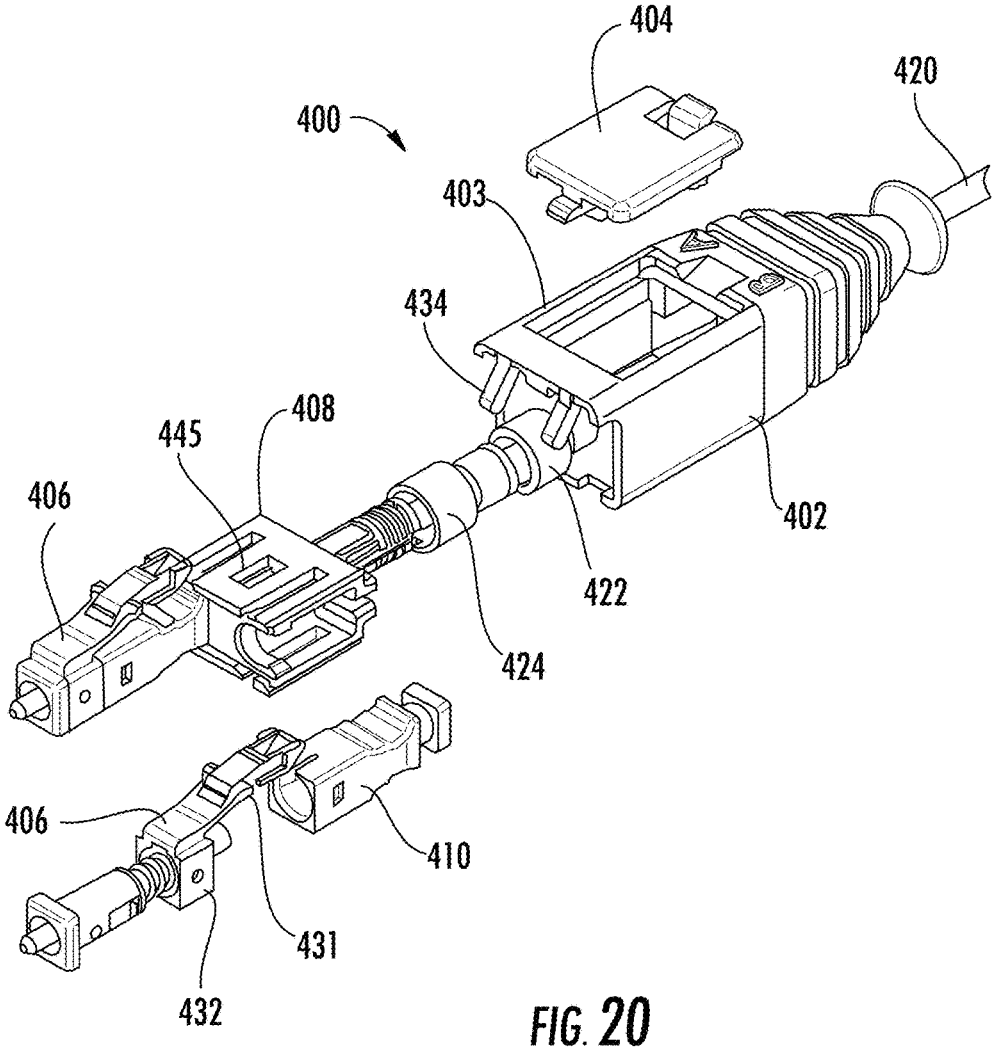

FIG. 20

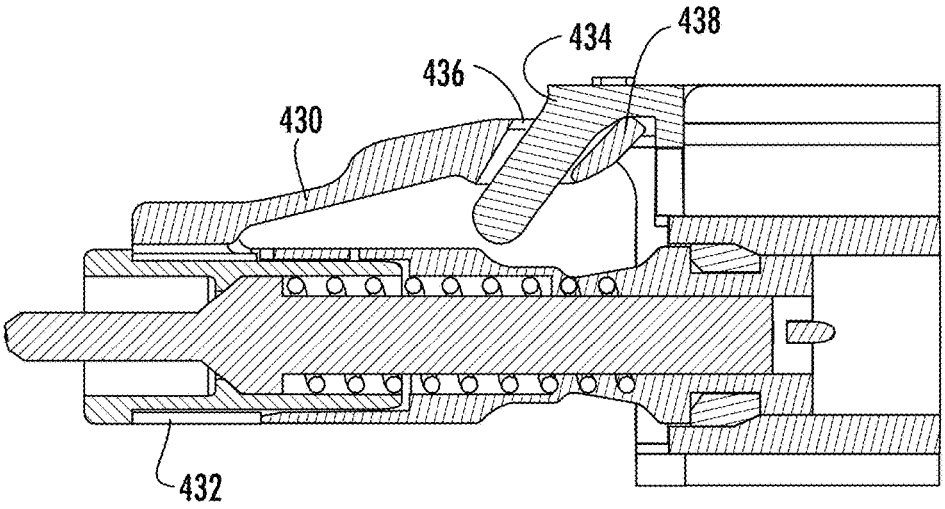

FIG. 21

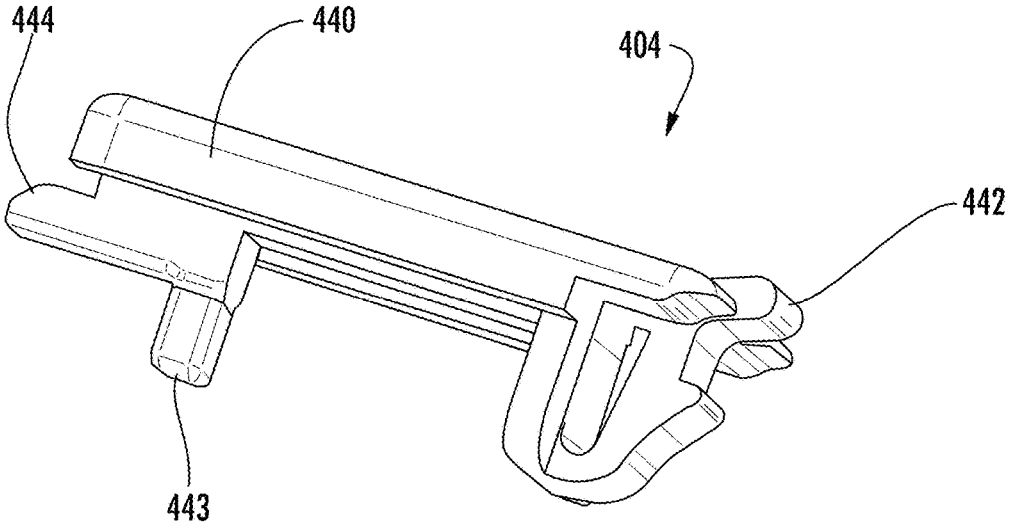

FIG. 22

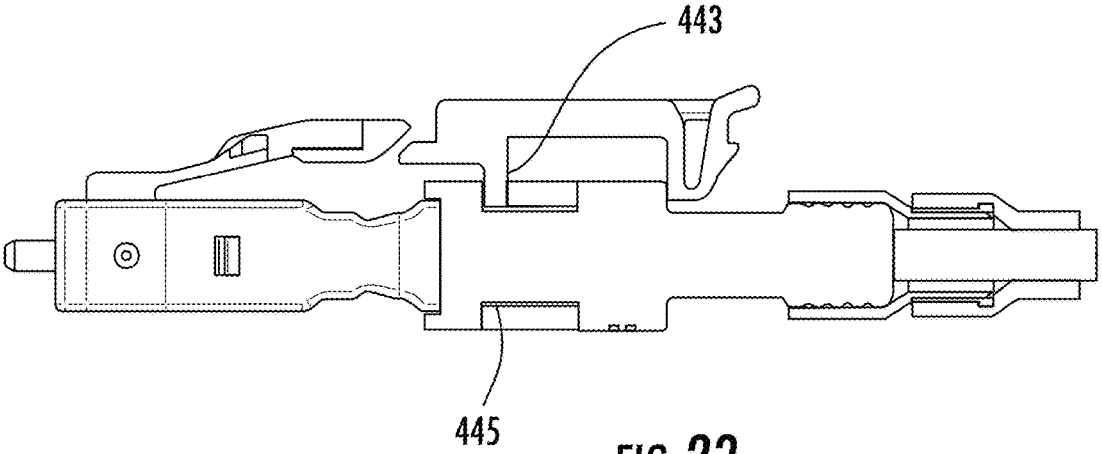

FIG. 23

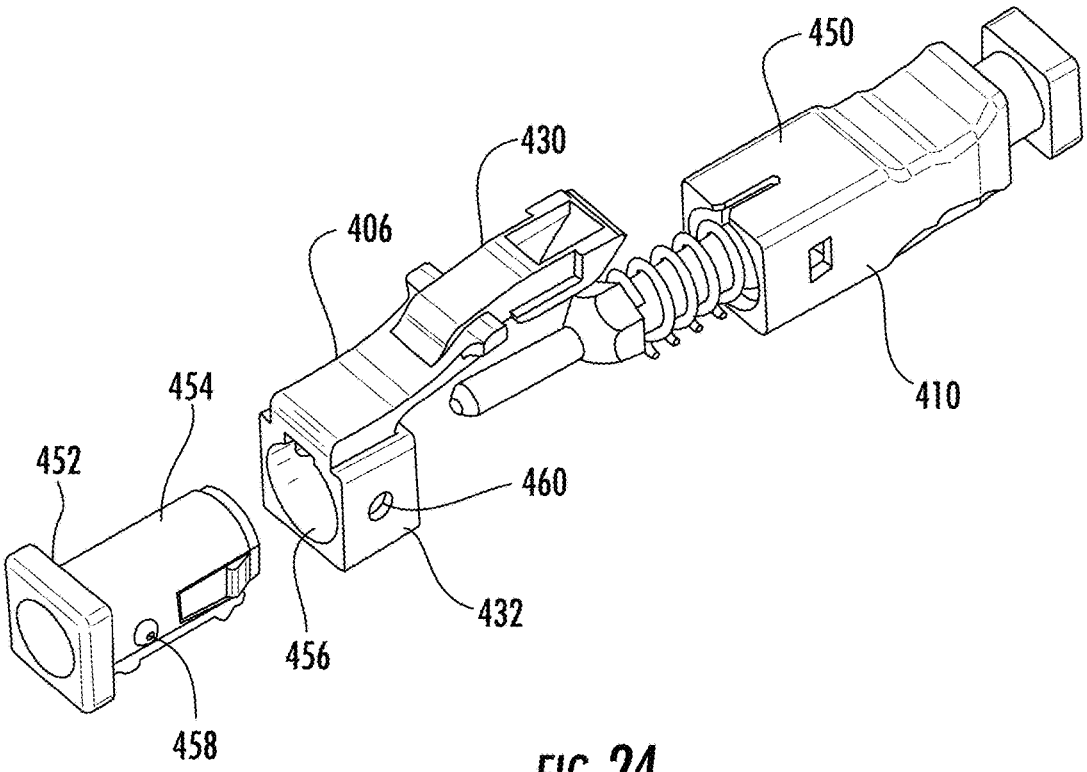

FIG. 24

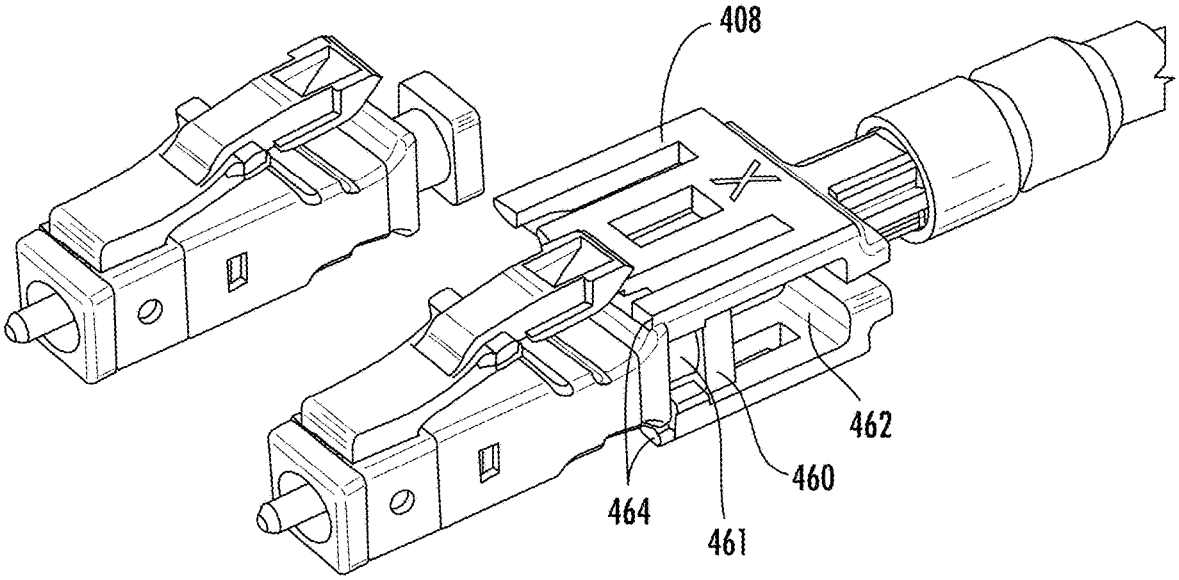

FIG. 25

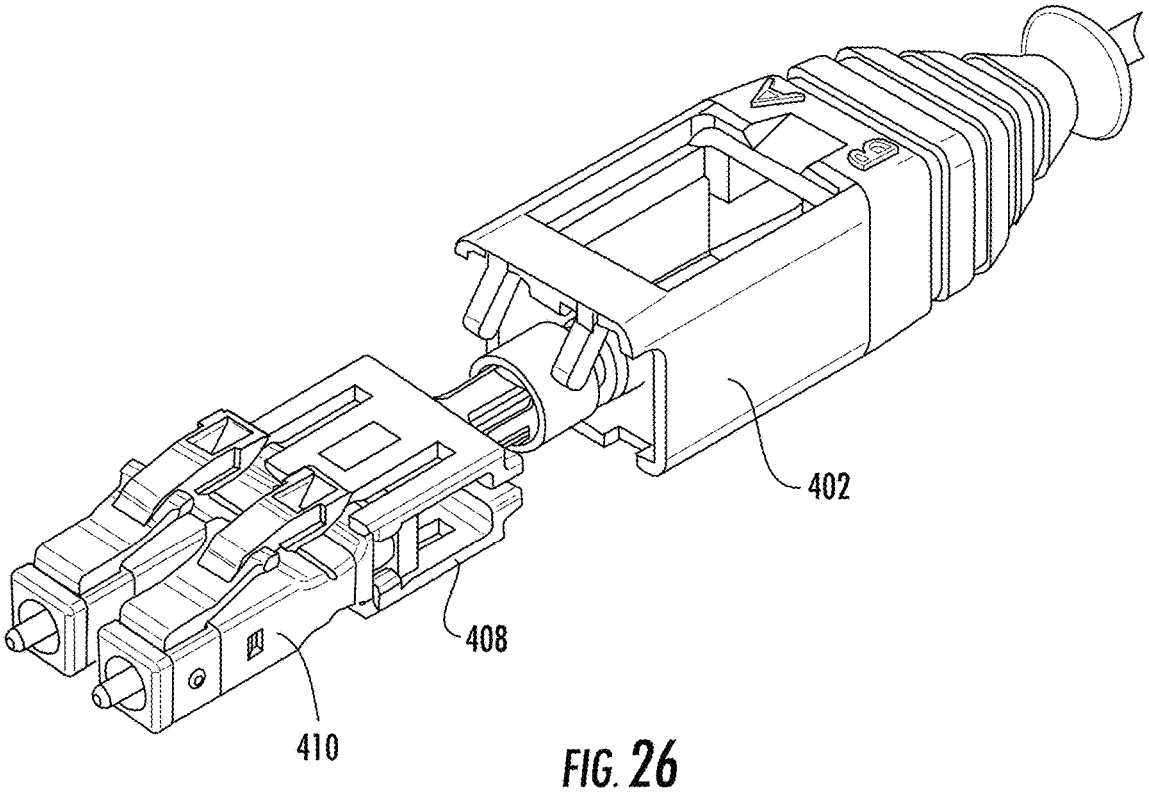

FIG. 26

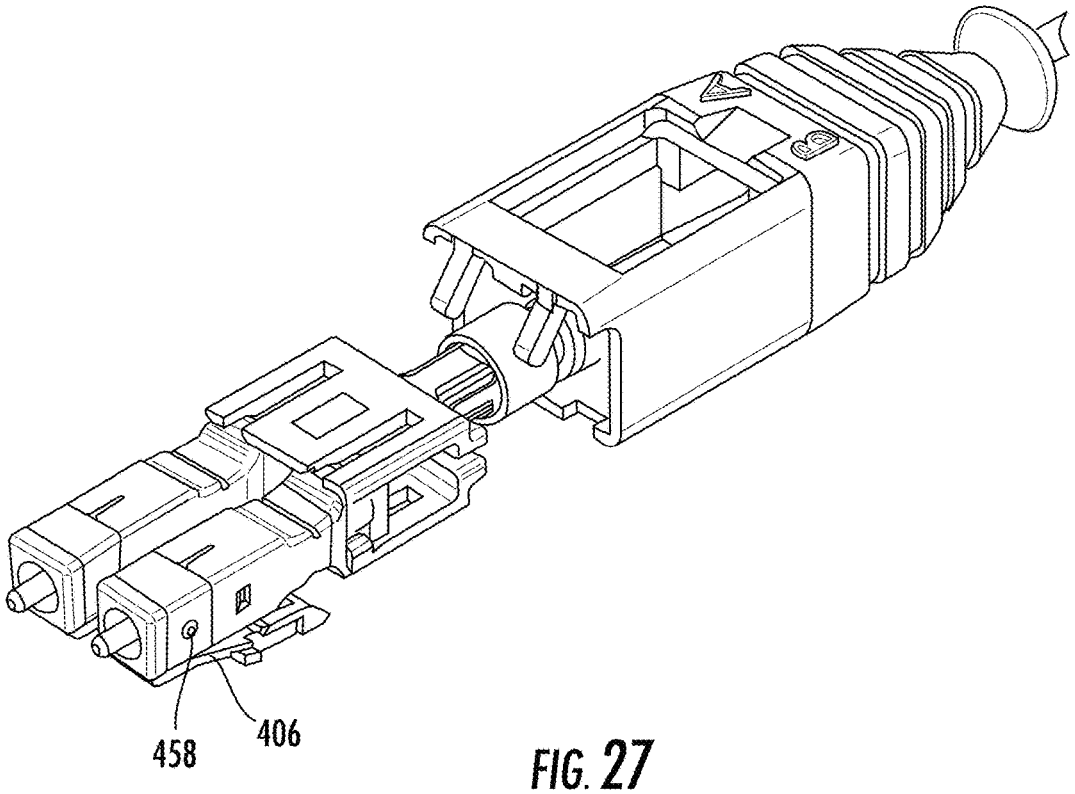

FIG. 27

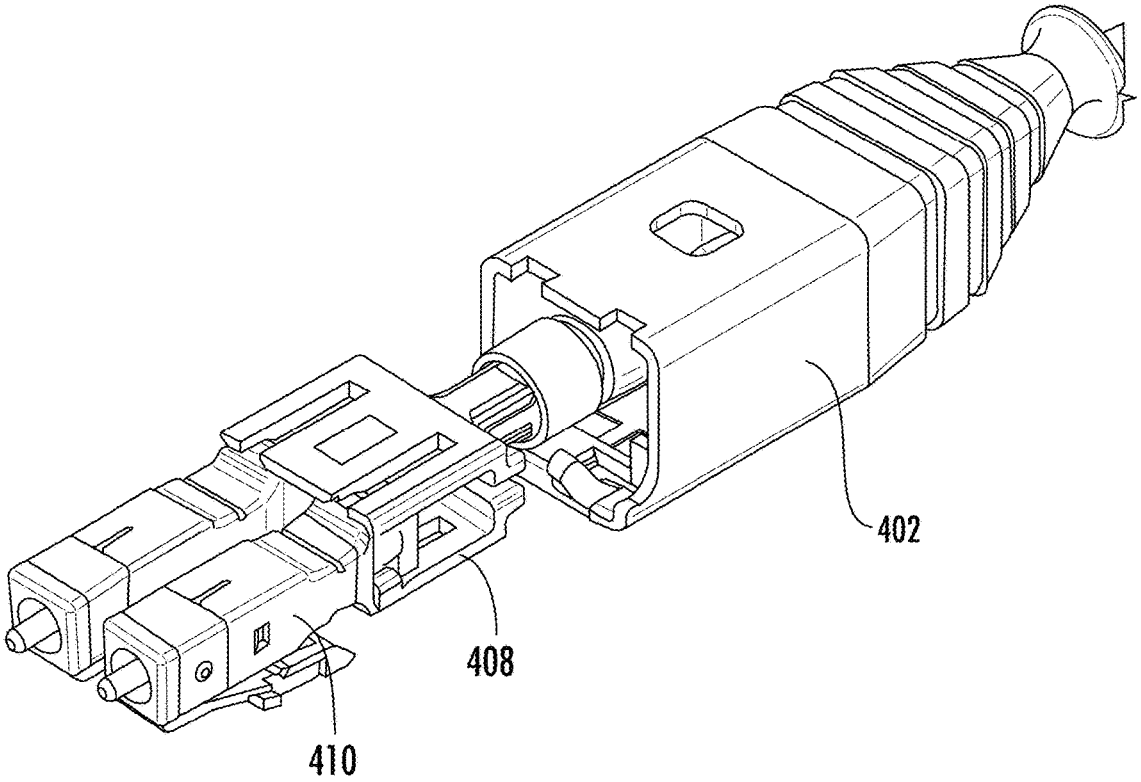

FIG. 28

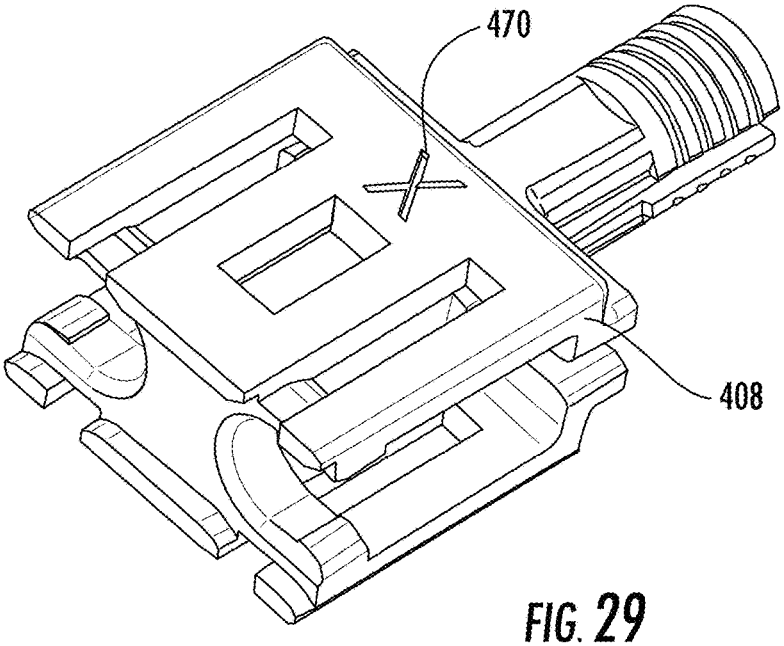

FIG. 29

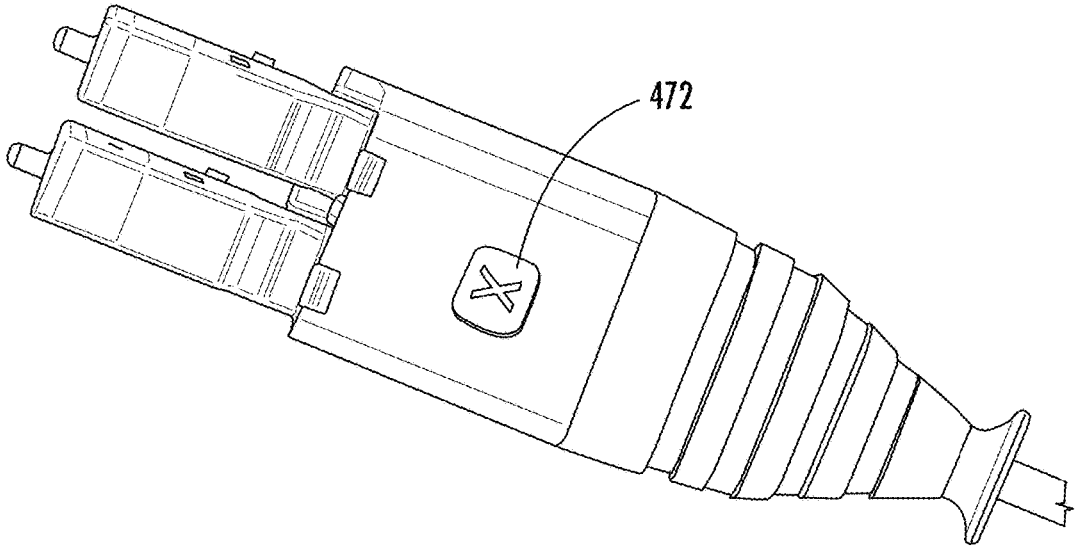

FIG. 30

FIBER OPTIC CONNECTOR WITH POLARITY CHANGE

BACKGROUND OF THE INVENTION

Fiber optic connectors are used to terminate fiber optic cable. One format for a fiber optic connector is the LC format. Existing LC connectors have a latch that must be depressed. In high-density applications it can be difficult for users to get their fingers into tight spaces to depress the latch. To address this issue, existing LC connectors utilize a "push-pull" mating mechanism to activate the LC latch. These push-pull designs use a traditional LC body/latch combination, which increases the overall connector height, and also typically require the user to grasp a duplex clip to release the latch, which is far forward near the congested mating area.

With fiber optic cable termination, it is sometimes necessary to change polarity of the connection. Existing uniboot connectors either do not allow polarity changes or make it difficult for the user to make a change. Polarity changes on these connectors require disconnecting the connector from a clip, and rotating the connector. This rotation of the connector simultaneously rotates the fiber, placing strain on the fiber. This requires numerous steps to be performed by the user, and also exposes the sensitive fiber to damage, particularly in the field where conditions are variable.

BRIEF DESCRIPTION OF THE DRAWINGS

FIG. **1** is an exploded, perspective view of a connector in an exemplary embodiment.

FIG. **2** is a perspective view of the connector of FIG. **1** assembled.

FIG. **3** is a perspective view of the connector of FIG. **1** with the cover removed.

FIG. **4** is a perspective view of a cover in an exemplary embodiment.

FIG. **5** is a perspective view of a latch in an exemplary embodiment.

FIG. **6** is a perspective view of the connector of FIG. **1** with the boot and cover removed.

FIGS. **7-10** illustrates changing connector polarity in an exemplary embodiment.

FIG. **11** illustrates a connector body and fiber holder in an exemplary embodiment.

FIG. **12** illustrates mounting the cover to the body in an exemplary embodiment.

FIGS. **13-16** illustrate a polarity icon in an exemplary embodiment.

FIGS. **17-19** illustrate polarity indicia in an alternate exemplary embodiment.

FIG. **20** is an exploded, perspective view of a connector in another exemplary embodiment.

FIG. **21** is a cross-sectional view of a portion of the connector of FIG. **21**.

FIG. **22** is a perspective view of a cover in an exemplary embodiment.

FIG. **23** is a cross-sectional view of a portion of the connector of FIG. **21**.

FIG. **24** is an exploded perspective view of a connector body and a latch in an exemplary embodiment.

FIG. **25** illustrates interaction between a connector body and a fiber holder in an exemplary embodiment.

FIGS. **26-28** illustrate changing connector polarity in an exemplary embodiment.

FIGS. **29-30** illustrate fiber holder polarity indicia in an exemplary embodiment.

DETAILED DESCRIPTION

Embodiments of the invention provide a push-pull LC duplex fiber connector that allows the connector to be more easily unlatched from its mating adapter when compared with a traditional LC connector. The connector includes a separate latch clip that enables the polarity to be changed without rotating the individual connectors, eliminating the need to twist the fibers, resulting in easier field polarity changes and a more reliable connection.

FIG. **1** is an exploded, perspective view of a connector **100** including a boot **102**, cover **104**, latch **106**, fiber holder **108**, and connector bodies **110**. The connector bodies **110** are latchless, LC type connector bodies. It is understood that embodiments may use different connector bodies, and the invention is not limited to LC type connections. A cable **120** runs through boot **102** and includes two optical fibers. Heat shrink material **122** encases at least a portion of cable **120** and a crimp ring **124** is secured to cable **102**. Connector bodies **110** terminate the two optical fibers in cable **120**. The connector bodies **110** are latchless, as latch **106** is used to secure the connector **100** to an adapter.

Boot **102** includes boot polarity indicia **130**, which includes two letters, but may include any type of symbol, color coding etc. Similarly, fiber holder **108** includes fiber holder polarity indicia **132**, which may match the boot polarity indicia **130**. Fiber holder **108** may include fiber holder polarity indicia **132** on both the top and bottom surfaces of the fiber holder **108**. The boot polarity indicia **130** and the fiber holder polarity indicia **132** indicate the polarity of the connector, depending upon whether the boot polarity indicia **130** and the fiber holder polarity indicia **132** are aligned or not (e.g., whether letters A and B are matched or not). FIG. **2** is a perspective view of the assembled connector **100**. FIG. **3** is a perspective view of the assembled connector **100**, with cover **104** removed.

FIG. **4** is a perspective view of the cover **104**. Cover **104** includes a generally rectangular cover body **140**. Extending from a rear of cover body **140** is a resilient latch **142**. Latch **142** secures the cover **104** to body **102**. A front edge of body **140** includes fingers **144** that extend away from cover body **140**. As shown in FIG. **1**, cover **104** is received in a cutout **103** in boot **102**. Fingers **144** are positioned under one edge of the cutout and latch **142** engages another edge of the cutout. To remove the cover, latch **142** is defeated using a finger or a tool. Tabs **143** extend below cover body **140** and travel in slots **155** (FIG. **5**) of latch **106** to limit travel of the boot **102** relative to the fiber holder **108**.

Cover **104** also includes a nub **146** extending downwards from an underside of cover body **140**. Nub **146** coacts with a ridge **150** on latch **106** (FIG. **5**). Latch **106** includes resilient arms **152** that engage mating structure on an LC adapter. Arms **152** extend forward, away from boot **102**, along the axis of insertion of the connector **100** with an adapter. As such, connector **100** has a lower profile than existing connectors having latches that extend up and rearward. Arms **152** are integral with ridge **150**, and deflect when ridge **150** is deflected as described herein. Latch **106** also includes mounting tabs **154** that secure the latch **106** to fiber holder **108**.

Latch **106** is secured to fiber holder **108** and boot **102** slides relative to fiber holder **108** to provide the push-pull activation of latch **106**. When mating the connector **100** to an adapter, boot **102** is pushed forward moving nub **146**

forward of ridge **150**. This allows the latch arms **152** to engage mounting structure on an LC adapter. To disconnect connector **100** from an adapter, the boot **102** is pulled back, opposite the axis of insertion, causing nub **146** to ride on ridge **150**. This deflects arms **152** downwards and releases latch **106** from the LC adapter. FIG. **6** is a perspective view of connector **100** with boot **102** and cover **104** removed.

One aspect of embodiments of the invention is the ability to change polarity of the connector without applying undue stress on the optical fibers in cable **120**. FIG. **7** illustrates a first step in changing the connector polarity, which involves removing the cover **104** from boot **102**. FIG. **8** illustrates a second step in changing the connector polarity. In this second step, the boot **102** is pulled back along the cable **120** to expose the fiber holder **108**. Latch **106** is removed from the fiber holder **108**.

FIG. **9** illustrates a third step in changing the connector polarity. As shown, the boot **102** is rotated 180 degrees and the latch **106** is moved from a first side of the fiber holder **108** to a second side of the fiber holder **108**. The fiber holder **108** is not rotated or repositioned. This reduces strain on the optical fibers terminated to the connector bodies **110**. Rotating the connector bodies **110**, which occurs with prior art designs, can cause torsional stress on the optical fibers. Embodiments of the invention avoid such stresses by maintaining the position of the fiber holder **108** and the connector bodies **110**. Further, the terminated connector bodies **110** need not be removed from the fiber holder **108** when changing polarity. This prevents damage to the optical fiber. In traditional designs, when changing the polarity, damage could result from just pulling the connectors out of the holder before rotation.

FIG. **10** illustrates a fourth step in changing the connector polarity. As shown in FIG. **10**, the fiber holder **108** is repositioned in boot **102** and cover **104** snapped back into position.

FIG. **11** illustrates interaction between the connector body **110** and fiber holder **108**. Fiber holder **108** includes at least one tab **160** extending adjacent to a surface of each connector body **110**. The design in FIG. **11** uses two tabs **160** adjacent to each connector body **110**. The interference between the tabs **160** and the surface of the connector bodies **110** prevents the connector bodies **110** from rotating. This keeps the connector bodies **110** aligned with the adapter to which connector **100** is mated.

FIG. **12** illustrates toolless mounting of cover **104** to body **102**.

FIG. **13** is a perspective view of connector **100** with an alternate cover **204** and a polarity icon **206**. Cover **204** is made from a clear material (i.e., transparent) and allows viewing of polarity icon **206** through cover **204**. Polarity icon **206** includes polarity icon indicia **208** which includes two letters, but may include any type of symbol, color coding etc. The polarity icon indicia **208** appears on both sides of polarity icon **206**, with the symbols reversed. The orientation of the polarity icon indicia **208** indicates the polarity of the connector **100**. Also shown in FIG. **13** is a flared end **103** of boot **102**. The flared end **103** helps with strain/bend relief and also provides a lip for the user to pull against when unmating the connector from an adapter. FIG. **14** is a top, perspective view of cover **204** fitted with polarity icon **206**. FIG. **15** is a bottom, perspective view of cover **204** and polarity icon **206**.

FIG. **16** is a perspective view of connector **100** with cover **204** and a polarity icon **206** after switching polarity relative to FIG. **13**. To change polarity of the connector **100**, the steps of FIGS. **7-10** discussed above are followed. Further, the polarity icon **206** is flipped by the installer and reinstalled in cover **204**. As shown in FIG. **16**, the polarity icon indicia **208** is opposite that of FIG. **13**, indicating that a change in polarity has occurred from a first polarity configuration to a second polarity configuration. The orientation of the polarity icon indicia **208** indicates the polarity of the connector.

FIG. **17** shows a boot **302** in an alternate embodiment. Boot **302** is similar to boot **102** in FIG. **13**, and includes a window **304** formed on an opposite side of cutout **103**. Window **304** is generally rectangular and allows viewing of the fiber holder polarity indicia **132** on the top and bottom surfaces of fiber holder **108**. FIG. **18** shows the window **304** of boot **302** and the fiber holder polarity indicia **132** visible through window **304**. If polarity of the connector is changed (i.e., by rotating the boot **302** relative to the fiber adapter **108** as discussed above), the orientation of the fiber holder polarity indicia **132** changes. FIG. **19** shows the window **304** after the polarity of the connector has been changed relative to FIG. **18**. As is shown, the orientation of the fiber holder polarity indicia **132** is now reversed relative to FIG. **18**. This allows easy determination of the polarity of the connector.

FIG. **20** is an exploded, perspective view of a connector **400** in an alternate embodiment. The connector **400** allows for polarity change of the connector, without rotating the connector bodies as described above. Connector **400** includes individual latches on each connector body and a uni-boot design. Connector **400** includes a boot **402**, cover **104**, latches **406**, fiber holder **408**, and connector bodies **410**. The connector bodies **410** are LC type connector bodies. It is understood that embodiments may use different connector bodies, and the invention is not limited to LC type connections. A cable **420** runs through boot **402** and includes two optical fibers. Heat shrink material **422**, which may be optional, encases at least a portion of cable **420** and a crimp ring **424** secures cable **420** to fiber holder **408**. Connector bodies **410** terminate the two optical fibers in cable **420**. As described in further detail herein, connector bodies **410** each receive a latch **406**, which are used to secure the connector **400** to a duplex adapter.

FIG. **21** is a cross-sectional showing the interaction between latch **406** and boot **402**. Each latch **406** includes a latch arm **430** that extends in a direction from a front, mating end of connector body **410** towards boot **402**. A latch collar **432** (FIG. **20**) is used to secure the latch **406** to connector body **410**, and is described in further detail herein. Boot **402** includes hooks **434**, each of which is received in an opening **436** in a distal free end of latch arm **430**. A cam surface **438** is formed on an interior surface of opening **436**, near the free, distal end of latch arm **430**.

As with the embodiment in FIG. **1**, boot **402** moves relative to fiber holder **408**. When boot **402** is forward, hooks **434** do not interfere with travel of latch arm **430**. Latch arm **430** is resilient and snaps into an adapter for mating with connector bodies **410**. A shoulder **431** is formed on latch arm **430** that engages a wall in an adapter, as is conventional for LC type connectors.

To unplug the connector **400**, boot **402** is moved backwards, away from the mating end of connector body **410**, hooks **434** ride over cam surfaces **438** to deflect latch arm **430** downwards towards connector body **410**. This causes the latch arm **430** to become disengaged from an adapter to free the connector **400** from the adapter.

The downward hook design of FIG. **21** provides snag-prevention. When fiber connectors are used as part of cable assemblies in the field, they are snaked and routed through areas that are typically congested with high volumes of

cables or other obstacles. When connectors have exposed edges or protrusions, they can become snagged during installation, potentially damaging the connector or other materials in the area. This snagging could occur when another object is swept over the connector in any direction, but is most typically seen when impacted from the back or the front. The downward hook **434** of FIG. **21** allows a smoother surface on the connector **400** and boot **402** to eliminate many possible snag points. The design of hook **434** allows latch arm **430** to have a lower profile and be contained within a region defined by the outside surface of boot **402**. As latch arm **430** does not extend beyond an outside surface of boot **402**, snag prevention is enhanced.

FIG. **22** is a perspective view of the cover **404**. Cover **404** includes a generally rectangular cover body **440**. Extending from a rear of cover body **440** is a resilient latch **442**. Latch **442** secures the cover **404** to boot **402**. A front edge of body **440** includes a finger **444** that extends away from cover body **440**. As shown in FIG. **1**, cover **404** is received in a cutout **403** in boot **402**. Finger **444** is positioned under one edge of the cutout and latch **442** engages another edge of the cutout. To remove the cover, latch **442** is defeated using a finger or a tool. Tab **443** extends below cover body **440** and travels in slot **445** (FIG. **20**) of fiber holder **408** to limit travel of the boot **402** relative to the fiber holder **408** in both the forward and rearward directions.

Latch **406** is secured to connector body **410**. Boot **402** slides relative to fiber holder **408** to provide the push-pull activation of latch **406**. When mating the connector **400** to an adapter, boot **402** is pushed forward so that hook **434** does not contact cam surface **438**. This allows the latch arms **430** to engage mounting structure on an LC adapter. To disconnect connector **400** from an adapter, the boot **402** is pulled back, opposite the axis of insertion, causing hooks **434** to ride over cam surfaces **438**. This deflects arms **430** downwards and releases latch **406** from the LC adapter.

FIG. **23** is a cross-section view showing tab **443** positioned in slot **445**. Slot **445** is sized to limit travel of the cover **404**, and thus boot **402**, relative to the fiber holder **408**. This controls position of the hooks **434** relative to latch arms **430** to achieve the desired interaction between the hooks **434** and cam surfaces **438**.

The embodiment of FIG. **20** also provides the ability to change polarity of the connector without applying undue stress on the optical fibers in cable **420**. FIG. **24** is an exploded, perspective view of a connector body **410** and latch **406**. Connector body **410** includes a main section **450**, which is generally rectangular (e.g., square). A front section **452** includes a cylindrical portion **454** which receives collar **432** of latch **406**. Front section **452** mates with main section **450** to enclose a spring-loaded ferrule.

Collar **432** has a generally rectangular outside surface, with an internal, cylindrical opening **456**. Collar **432** is positioned over cylindrical portion **454** so that latch **406** can rotate relative to connector body **410**. Two nubs **458** on cylindrical portion **454** engage openings **460** in collar **432** to fix the orientation of collar **432** relative to connector body **410**. Nubs **458** secure the collar **432** in two positions corresponding to opposite connector polarities (e.g., 0 and 180 degrees), as described in further detail herein. The interference between nubs **458** and openings **460** can be defeated by rotating the collar **432** to disengage the nubs **458** from openings **460**.

FIG. **25** illustrates interaction between the connector body **410** and fiber holder **408**. Main section **450** includes a rectangular (e.g., square) anti-rotation block **460** that is received in a similarly shaped channel **462** of fiber holder **408**. It is understood that geometries other than square may be used to prevent rotation. A cylindrical neck **461** adjacent to anti-rotation block **460** allows for easy insertion of the connector body **410** into the fiber holder **408**. Geometries other than cylindrical may be used for the connector body neck **461** that is inserted into the fiber holder **408**. Fiber holder **408** also includes at least one tab **464** extending adjacent to a surface of each connector body **410**. The design in FIG. **25** uses two tabs **464** adjacent to each connector body **410**. The interference between the tabs **464** and the surface of the connector bodies **410** prevents the connector bodies **410** from rotating when mounted in fiber holder **408**. This keeps the connector bodies **410** aligned with the adapter to which connector **400** is mated.

FIG. **26** illustrates a first step in changing the connector polarity, which involves removing the cover **404** from boot **402**. Boot **402** is pulled backwards from fiber holder **408** and connector bodies **410**. Hooks **434** ride over cam surfaces **438** and exit the latch arm.

FIG. **27** illustrates a second step in changing the connector polarity. In this second step, latches **406** are rotated 180 degrees. Initial force applied to latch **406** disengages nubs **458** from openings **460** as collar **432** rotates about cylindrical portion **454**. As the collar **432** reaches 180 degrees from its initial position, nubs **458** re-engage openings **460** to secure latch **406** in the reversed polarity position.

FIG. **28** illustrates a third step in changing the connector polarity. As shown, the boot **402** is rotated 180 degrees. The fiber holder **408** is not rotated or repositioned. This reduces strain on the optical fibers terminated to the connector bodies **410**. Rotating the connector bodies **410**, which occurs with prior art designs, can cause torsional stress on the optical fibers. Embodiments of the invention avoid such stresses by maintaining the position of the fiber holder **408** and the connector bodies **410**. Further, the terminated connector bodies **410** need not be removed from the fiber holder **408** when changing polarity. This prevents damage to the optical fiber. In traditional designs, when changing the polarity, damage could result from just pulling the connectors out of the holder before rotation.

The final steps involve placing the fiber holder **408** back into boot **402** and reinstalling cover **404**.

FIG. **29** is a perspective view of the fiber holder **408**. Fiber holder **408** includes a fiber holder polarity indicia **470** on one side of the fiber holder. As shown in FIG. **30**, boot **402** includes a window **472** for viewing the fiber holder polarity indicia **470**. As the fiber holder polarity indicia **470** is formed on only one side of the fiber holder **408**, the polarity of connector **400** can be determined based on the presence or absence of the fiber holder polarity indicia **470** in window **472**. In alternate embodiments, a different fiber holder polarity indicia **470** is formed on each side of the fiber holder **408** (e.g., A on one side, B on the opposite side) so that one of the fiber holder polarity indicia **470** is presented in window **472** in either polarity orientation.

Embodiments of the invention provide a high-density fiber connector to more easily access and unlatch a fiber LC connector without disturbing nearby connections. Embodiments enable higher density placement of mating adapters. Embodiments allow the user to grasp the connector boot far behind the mating area, where there is less interference from nearby connectors, and pull the boot to disengage the latch. Embodiments also provide damage-free polarity change and indicia to reflect the polarity change.

Embodiments also provide a rotating latch allowing the polarity to be changed without rotating the individual connectors, eliminating the need to twist the fibers, resulting in

easier field polarity changes and a more reliable connection. The latch rotates relative to the connector body, and therefore rotates relative to the fiber and the ferrule internal to the connector body, to change polarity. This establishes an easier and more reliable way for users in the field to change polarity of duplex fiber connectors. Although the rotating latch is most beneficial with uniboot-style connectors, it may also be applied to traditional connectors that use duplexing clips.

The rotating latch **406** may be used with LC type connectors, such as the LC products from the Siemon Company. It is understood that the rotating latch may also be used with other types of connectors to provide polarity change. Also, the rotating latch may be used with other types of connectors (e.g., copper) to provide for reorienting latch position without disturbing the signal connections. The rotating latch **406** keeps the connector body positioned within the fiber holder and does not put stresses on the fiber, providing easy, damage-free polarity change.

While the invention has been described with reference to exemplary embodiments, it will be understood by those skilled in the art that various changes may be made and equivalents may be substituted for elements thereof without departing from the essential scope thereof. Therefore, it is intended that the invention not be limited to the particular embodiments disclosed for carrying out the invention, but that the invention will include all embodiments falling within the scope of this disclosure.

What is claimed is:

1. A fiber optic connector configured to mate with an adapter, the fiber optic connector comprising:

a boot configured to receive an optical fiber;

a connector body configured to receive the optical fiber and terminate the optical fiber;

a fiber holder configured to receive the connector body; and

a latch coupled to the connector body, the latch repositionable relative to the connector body to enable polarity change of the fiber optic connector without changing a relative position of the connector body and the optical fiber;

wherein the latch comprises a latch arm configured to engage the adapter;

wherein the boot is movable relative to the fiber holder;

wherein the boot and latch arm are coupled such that sliding of the boot relative to the fiber holder causes deflection of the latch arm.

2. The fiber optic connector of claim **1** wherein:

the latch arm extends towards the boot.

3. A fiber optic connector configured to mate with an adapter, the fiber optic connector comprising:

a boot configured to receive an optical fiber;

a connector body configured to receive the optical fiber and terminate the optical fiber; and

a latch coupled to the connector body, the latch repositionable relative to the connector body to enable polarity change of the fiber optic connector without changing a relative position of the connector body and the optical fiber;

wherein the latch comprises a latch arm configured to engage the adapter;

wherein the latch includes a collar configured to engage the connector body, the collar rotatable relative to the connector body.

4. The fiber optic connector of claim **3** wherein:

the connector body includes a cylindrical portion and the collar includes a cylindrical opening, the cylindrical opening positioned about the cylindrical portion.

5. The fiber optic connector of claim **4** wherein:

the cylindrical portion includes a nub and the cylindrical opening includes an opening configured to receive the nub to fix the orientation of the collar to the connector body.

6. A fiber optic connector configured to mate with an adapter, the fiber optic connector comprising:

a boot configured to receive an optical fiber;

a connector body configured to receive the optical fiber and terminate the optical fiber; and

a latch coupled to the connector body, the latch repositionable relative to the connector body to enable polarity change of the fiber optic connector without changing a relative position of the connector body and the optical fiber;

wherein the latch comprises a latch arm configured to engage the adapter;

the latch arm includes an opening at a distal end of the latch arm; and

the boot includes a hook positioned in the opening.

7. The fiber optic connector of claim **6** wherein:

the opening in the latch arm includes a cam surface;

the hook traveling over the cam surface to deflect the latch towards the connector body.

8. The fiber optic connector of claim **6** wherein:

the hook points towards the connector body.

9. The fiber optic connector of claim **1** wherein:

the latch arm extends away from the boot towards a mating end of the connector body.

10. The fiber optic connector of claim **9** further comprising:

a second connector body for receiving a second optical fiber and terminating the second optical fiber;

wherein the latch includes two arms, each arm positioned proximate to one of the connector body and the second connector body.

11. The fiber optic connector of claim **10** further comprising:

a ridge positioned between the two arms;

the boot including a nub that coacts with the ridge to deflect the arms towards the connector body and second connector body.

12. The fiber optic connector of claim **10** wherein:

the nub is mounted on a cover secured to the boot.

13. A fiber optic connector comprising:

a boot configured to receive an optical fiber;

a connector body configured to receive the optical fiber and terminate the optical fiber; and

a latch coupled to the connector body, the latch configured to engage an adapter for receiving the fiber optic connector, the latch positioned along a side of the connector body, the latch repositionable relative to the connector body to enable polarity change of the fiber optic connector without changing a relative position of the connector body and the optical fiber;

wherein the boot includes a window, a polarity indicator visible through the window to indicate a polarity of the fiber optic connector.

14. The fiber optic connector of claim **1** wherein:

the fiber holder is positioned at least partially in the boot.

15. The fiber optic connector of claim **14** wherein:

the boot includes a window;

a polarity indicator on the fiber holder being visible through the window to indicate a polarity of the fiber optic connector.

16. The fiber optic connector of claim **1** further comprising:

a polarity icon including polarity icon indicia, the polarity icon indicating a polarity of the fiber optic connector by a location of the polarity icon indicia.

17. The fiber optic connector of claim **16** wherein:

the polarity icon includes polarity icon indicia on both sides of the polarity icon.

18. The fiber optic connector of claim **16** wherein:

a portion of the boot is transparent, the polarity icon being viewable through the transparent portion.

19. The fiber optic connector of claim **18** wherein:

the transparent portion is a cover of the boot.

20. The fiber optic connector of claim **14** wherein:

the fiber holder includes at least one tab contacting the connector body to prevent rotation of the connector body.

21. The fiber optic connector of claim **14** wherein:

the fiber holder includes a channel configured to receive the connector body, the channel and the connector body shaped to prevent rotation of the connector.

22. A fiber optic connector configured to mate with an adapter, the fiber optic connector comprising:

a boot configured to receive an optical fiber;

a connector body having a ferrule configured to receive the optical fiber;

a fiber holder configured to receive the connector body; and

a latch coupled to the connector body, the latch repositionable relative to the ferrule to enable polarity change of the fiber optic connector without changing a position of the ferrule and the optical fiber;

wherein the latch comprises a latch arm configured to engage the adapter;

wherein the boot is movable relative to the fiber holder;

wherein the boot and latch arm are coupled such that sliding of the boot relative to the fiber holder causes deflection of the latch arm.

23. The fiber optic connector of claim **1** wherein the latch is repositionable relative to the connector body without rotation of the optical fiber.

24. The fiber optic connector of claim **22** wherein the latch is repositionable relative to the ferrule without rotation of the optical fiber.

* * * * *