US010156683B2

(12) **United States Patent**
Manes et al.

(10) **Patent No.: US 10,156,683 B2**
(45) **Date of Patent: Dec. 18, 2018**

(54) **POLARITY IDENTIFICATION FOR POLARITY REVERSING DUPLEX UNIBODY CONNECTORS**

(71) Applicant: **Leviton Manufacturing Co., Inc.**, Melville, NY (US)

(72) Inventors: **Dennis Manes**, Mill Creek, WA (US); **Evan Gustafson**, Seattle, WA (US); **Scott Hopper**, Snohomish, WA (US)

(73) Assignee: **Leviton Manufacturing Co., Inc.**, Melville, NY (US)

(*) Notice: Subject to any disclaimer, the term of this patent is extended or adjusted under 35 U.S.C. 154(b) by 0 days.

(21) Appl. No.: **15/381,071**

(22) Filed: **Dec. 15, 2016**

(65) **Prior Publication Data**

US 2017/0293088 A1 Oct. 12, 2017

Related U.S. Application Data

(63) Continuation-in-part of application No. 15/260,305, filed on Sep. 8, 2016, now Pat. No. 9,946,035.
(Continued)

(51) **Int. Cl.**
G02B 6/38 (2006.01)

(52) **U.S. Cl.**
CPC ***G02B 6/3831*** (2013.01); ***G02B 6/3825*** (2013.01); ***G02B 6/3885*** (2013.01)

(58) **Field of Classification Search**
CPC ... G02B 6/3831; G02B 6/3825; G02B 6/3885
(Continued)

(56) **References Cited**

U.S. PATENT DOCUMENTS

4,611,887 A 9/1986 Glover et al.
5,123,071 A 6/1992 Mulholland et al.
(Continued)

FOREIGN PATENT DOCUMENTS

CN 102749682 A 10/2012
CN 102749683 A 10/2012
(Continued)

OTHER PUBLICATIONS

Office Action dated Oct. 5, 2017 for U.S. Appl. No. 15/481,039, 25 pages.
(Continued)

Primary Examiner — Jerry Blevins
(74) *Attorney, Agent, or Firm* — Amin, Turocy & Watson, LLP

(57) **ABSTRACT**

A fiber optic connector assembly incorporates features that improve structural rigidity and the integrity of transmitted signals. These features also facilitate a technique for reversing polarity of the connector assembly with little or no risk of twisting the optical fibers and without requiring the housing assembly to be disassembled. The connector is marked or embossed with transmit and receive connector labels that facilitate visual identification of the polarity of the connector. One side of the duplex connector can be marked with "A" and "B" labels corresponding to the receive and transmit connectors, respectively. The opposite side of the duplex connector can be marked with two "A" labels corresponding to the receive and transmit connectors, respectively. Thus, a user can readily identify whether the connector is configured for "A-B" polarity or "A-A" polarity.

20 Claims, 39 Drawing Sheets

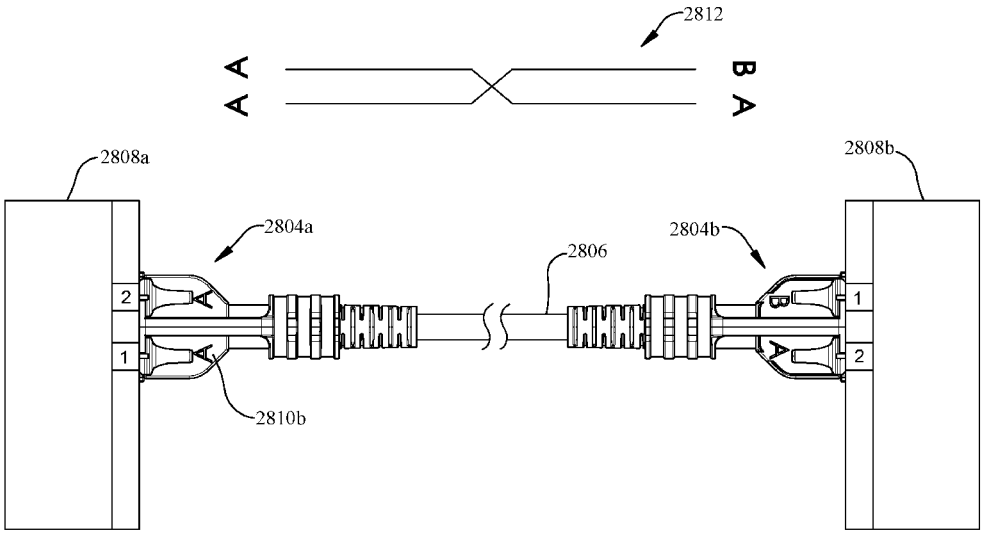

Related U.S. Application Data

(60) Provisional application No. 62/321,145, filed on Apr. 11, 2016.

(58) **Field of Classification Search**
USPC 385/78
See application file for complete search history.

(56) **References Cited**

U.S. PATENT DOCUMENTS

5,293,581	A	3/1994	DiMarco
5,528,712	A	6/1996	Belenkiy et al.
5,579,425	A	11/1996	Lampert et al.
5,727,101	A	3/1998	Glebel et al.
6,250,817	B1	6/2001	Lampert et al.
6,357,934	B1	3/2002	Driscoll et al.
6,409,392	B1	6/2002	Lampert et al.
6,435,732	B1	8/2002	Asao et al.
6,511,230	B1	1/2003	Connelly et al.
6,672,898	B2	1/2004	Kahle et al.
6,744,939	B2	6/2004	Lampert et al.
6,918,704	B2	7/2005	Marrs et al.
7,178,990	B2	2/2007	Caveney et al.
7,189,008	B2	3/2007	Dye
7,712,970	B1	5/2010	Lee
8,152,385	B2	4/2012	De Jong et al.
8,636,424	B2	1/2014	Kuffel et al.
8,678,669	B2	3/2014	Lee
8,727,638	B2	5/2014	Lee et al.
8,764,308	B2	7/2014	Irwin
8,801,301	B2	8/2014	Bradley et al.
9,063,303	B2	6/2015	Irwin et al.
9,207,410	B2	12/2015	Lee et al.
9,316,803	B2	4/2016	Manes
9,557,495	B2	1/2017	Raven et al.
9,625,658	B1	4/2017	Lin
2007/0047877	A1	3/2007	Pepe
2010/0220961	A1*	9/2010	de Jong G02B 6/3879 385/77
2012/0099822	A1	4/2012	Kuffel et al.
2012/0308183	A1	12/2012	Irwin et al.
2014/0050443	A1	2/2014	Lee
2014/0169727	A1	6/2014	Veatch et al.
2014/0270636	A1	9/2014	Manes
2015/0277059	A1	10/2015	Raven et al.

FOREIGN PATENT DOCUMENTS

CN	103091793	A	5/2013
CN	102749683	B	11/2014
CN	102749682	B	5/2015
TW	M474924924		3/2014
WO	2010099141	A1	9/2010
WO	2015103783	A1	7/2015

OTHER PUBLICATIONS

International Search Report for PCT Application No. PCT/US2016/055876, dated Jan. 25, 2017, 10 pages.
Written Opinion of the International Searching Authority for PCT Application No. PCT/US2016/055876, dated Jan. 25, 2017, 7 pages.
International Search Report for PCT Application No. PCT/US2017/020150, dated Jun. 15, 2017, 5 pages.
Written Opinion of the International Searching Authority for PCT Application No. PCT/US2017/020150, dated Jun. 15, 2017, 6 pages.
International Search Report for PCT Application No. PCT/US2017/026486, dated Jul. 26, 2017, 3 pages.
Written Opinion of the International Searching Authority for PCT Application No. PCT/US2017/026486, dated Jul. 26, 2017, 5 pages.
Office Action dated Jun. 30, 2017 for U.S. Appl. No. 15/260,305, 20 pages.

* cited by examiner

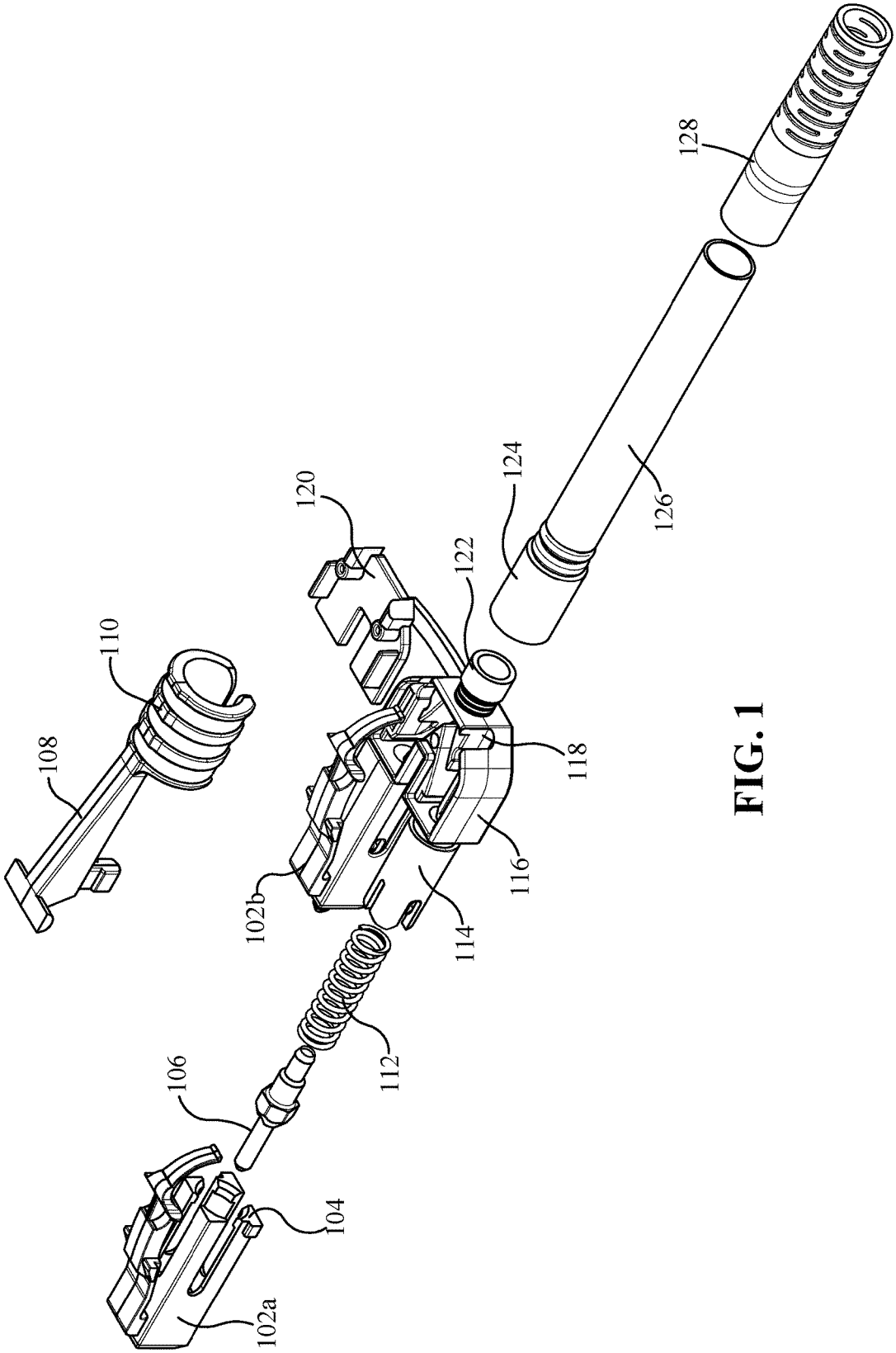

FIG. 1

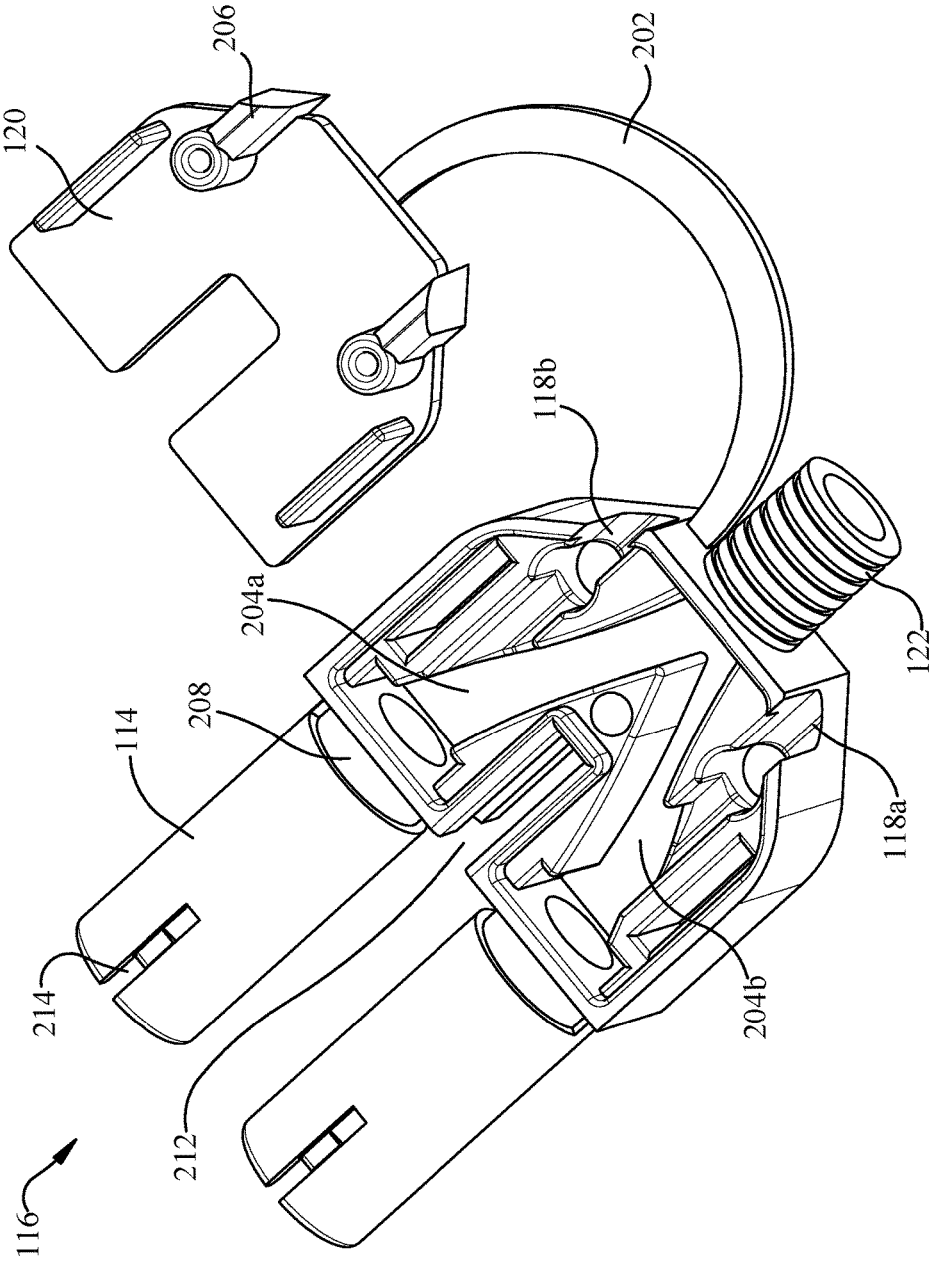

FIG. 2

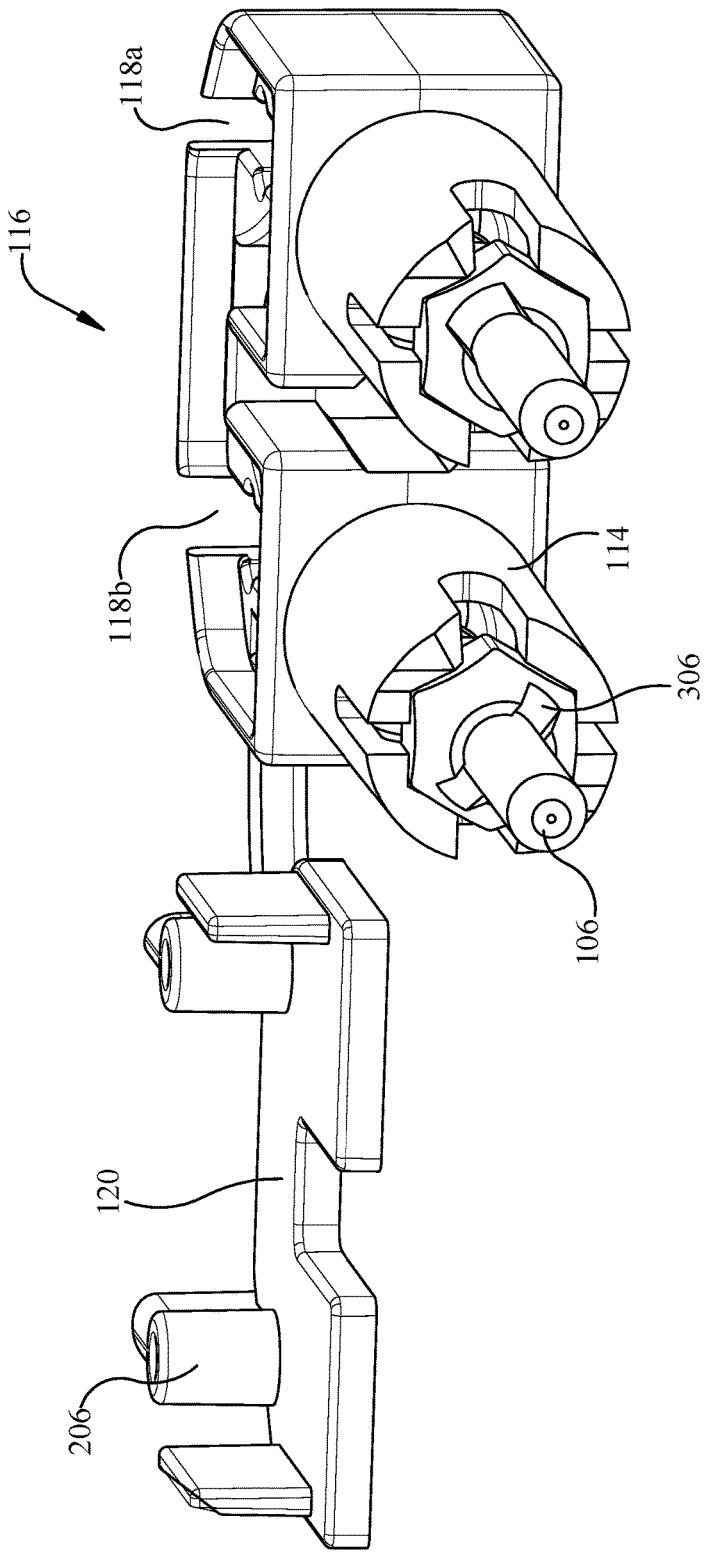

FIG. 3

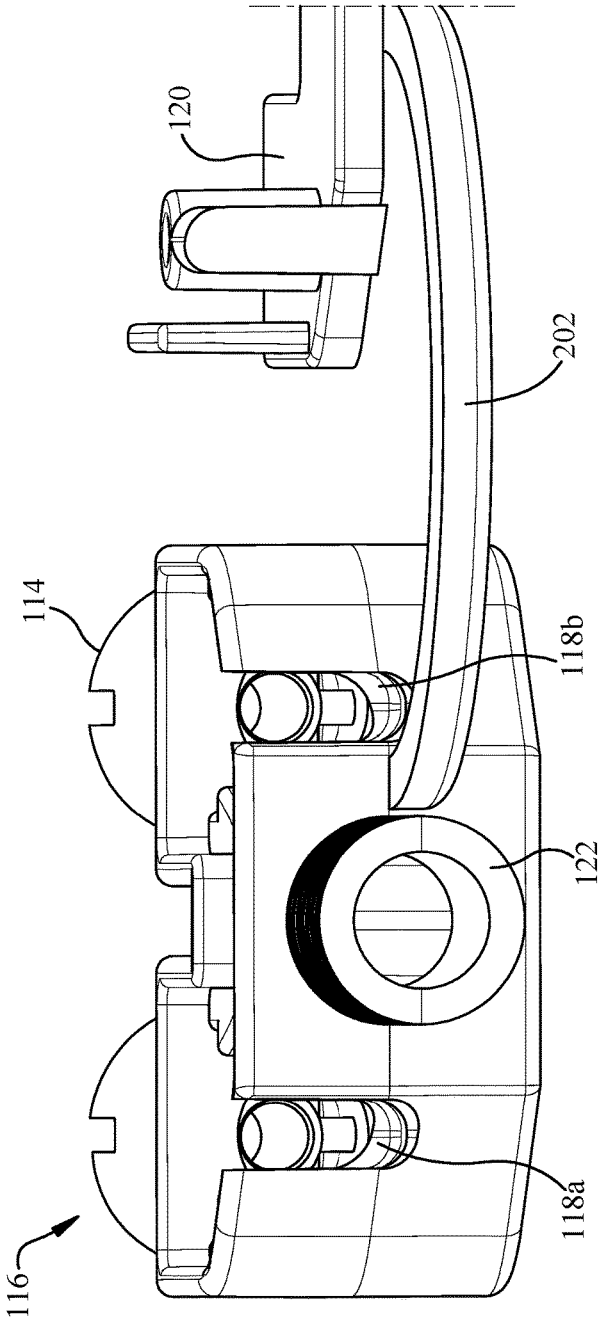

FIG. 4

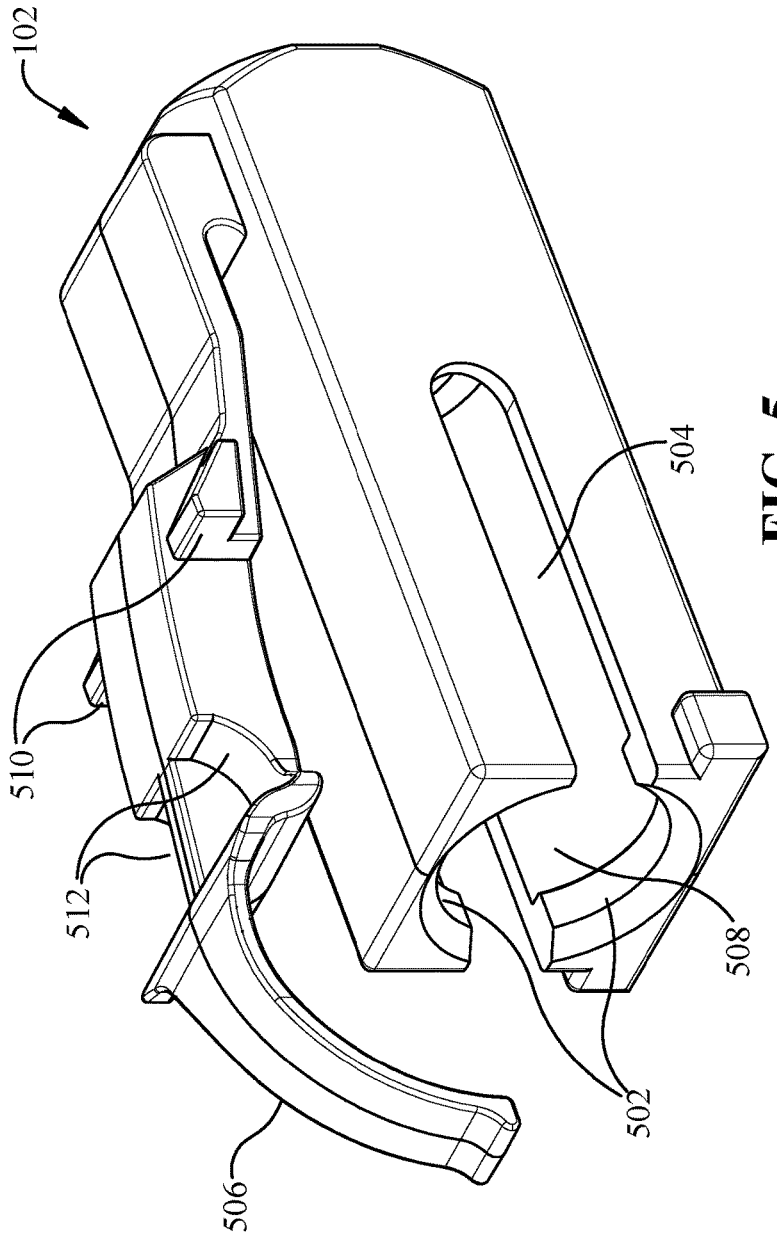

FIG. 5

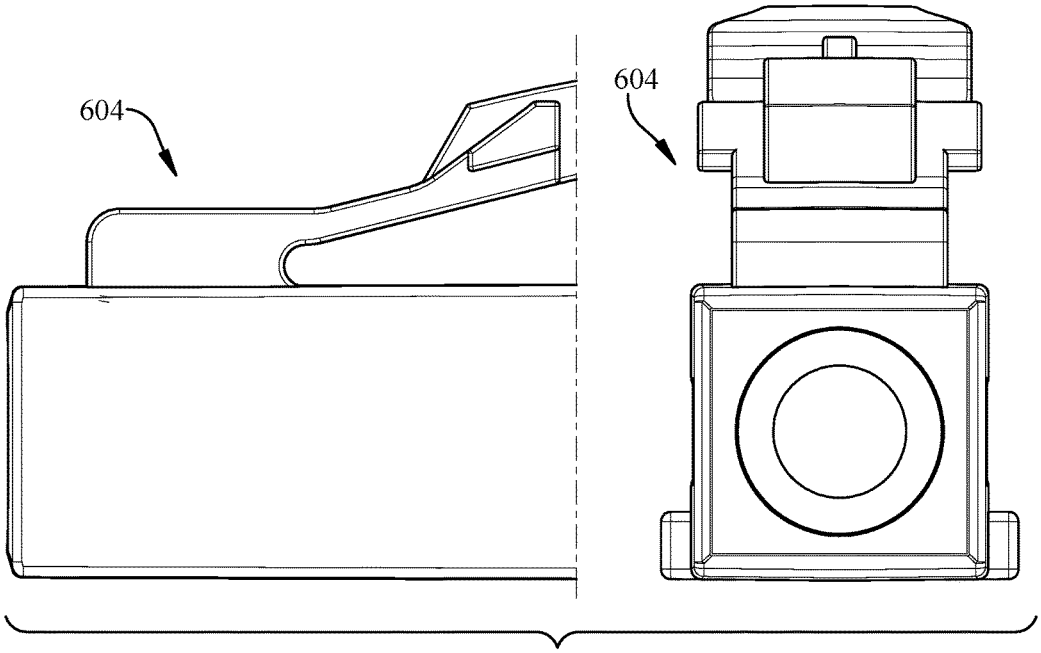

FIG. 6A

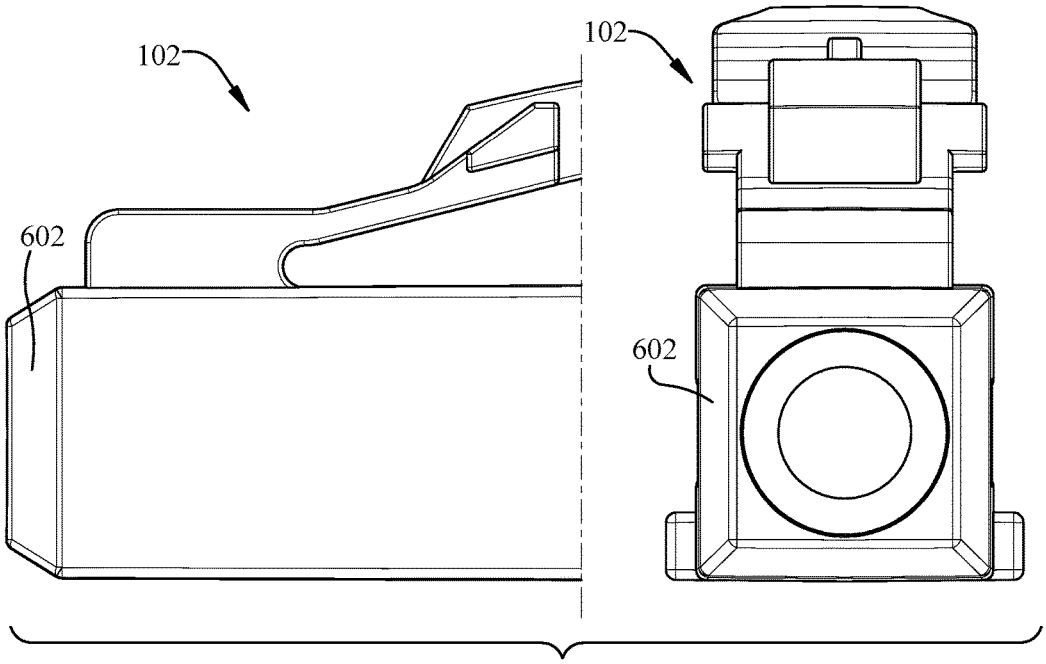

FIG. 6B

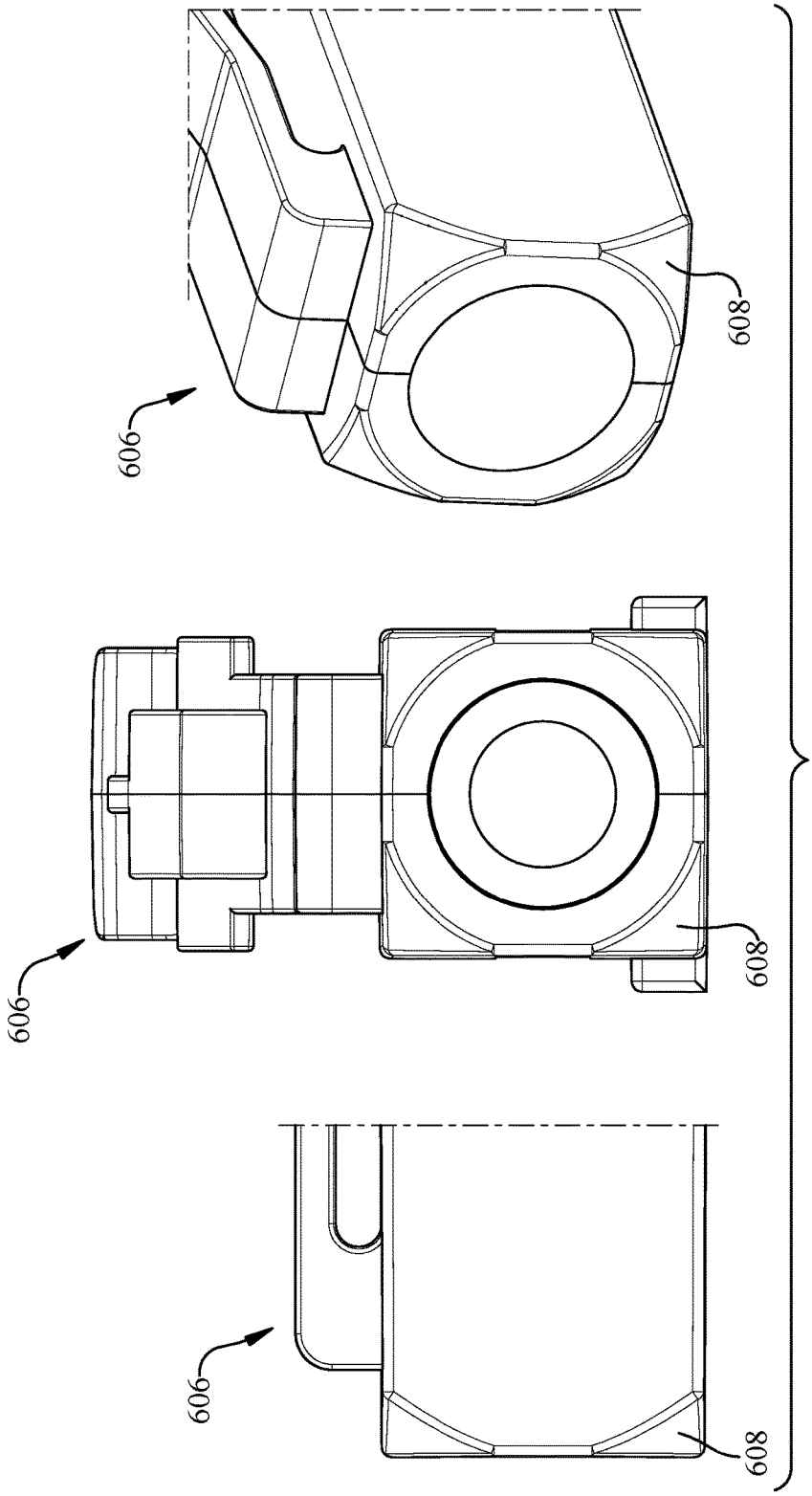

FIG. 6C

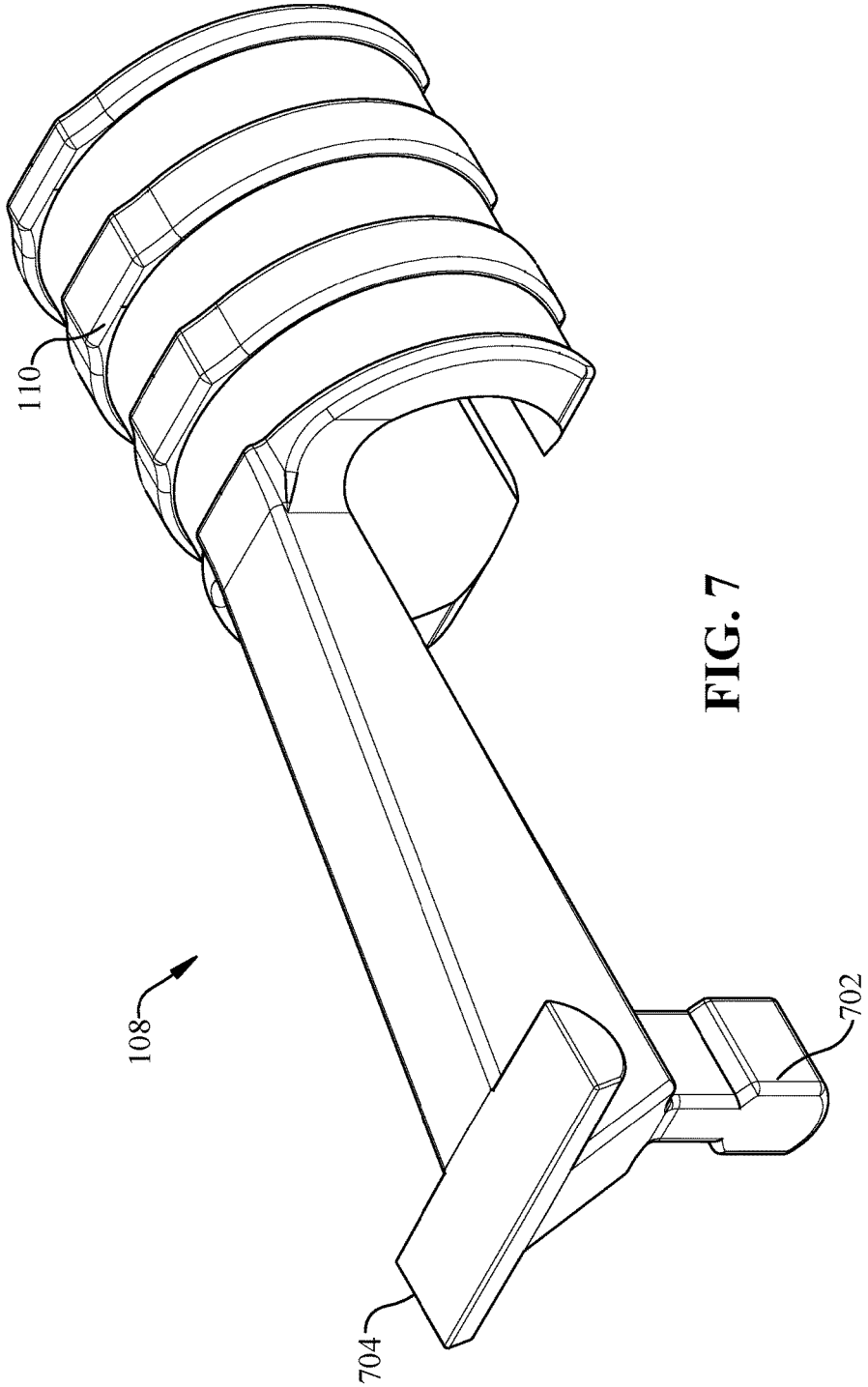

FIG. 7

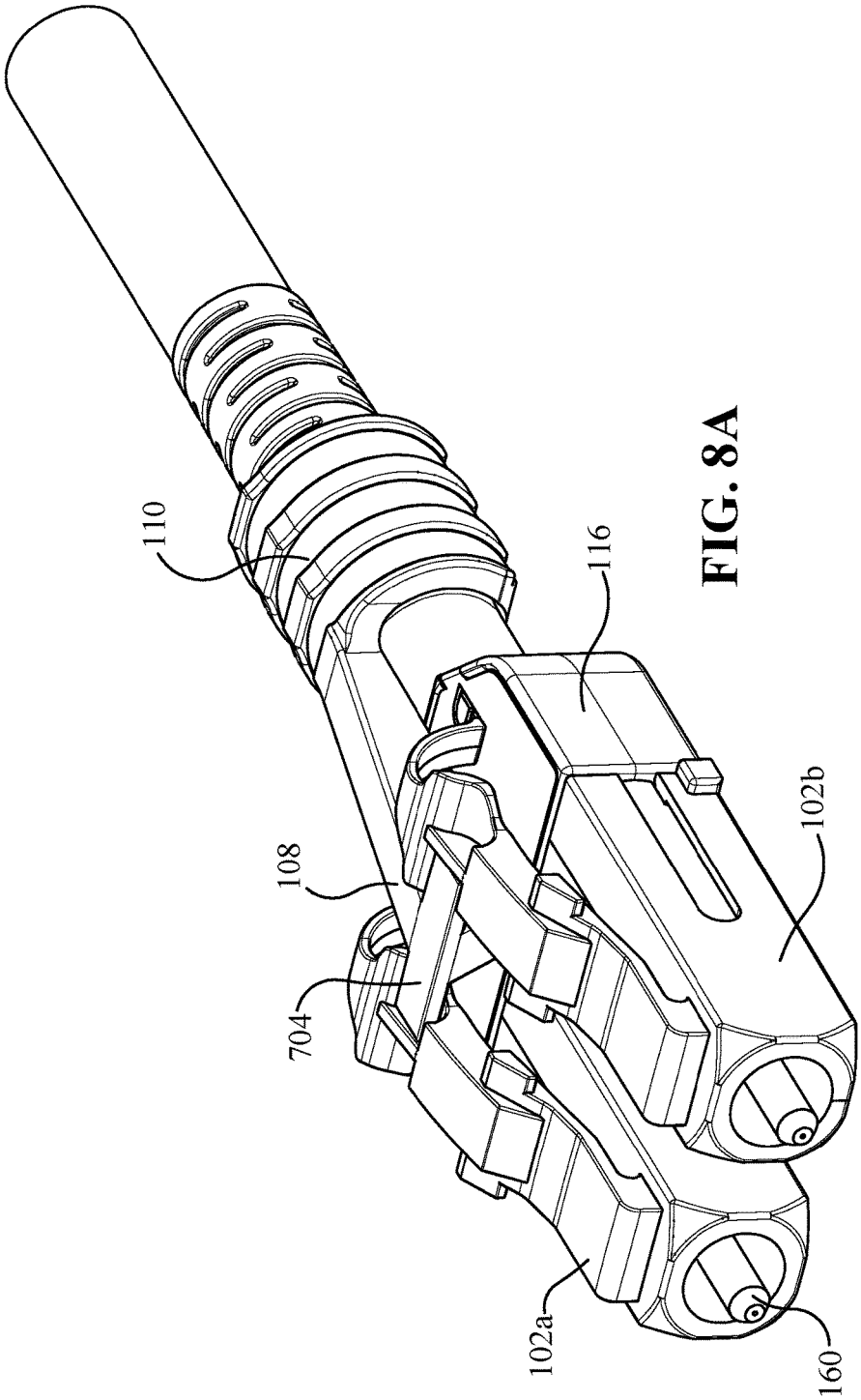

FIG. 8A

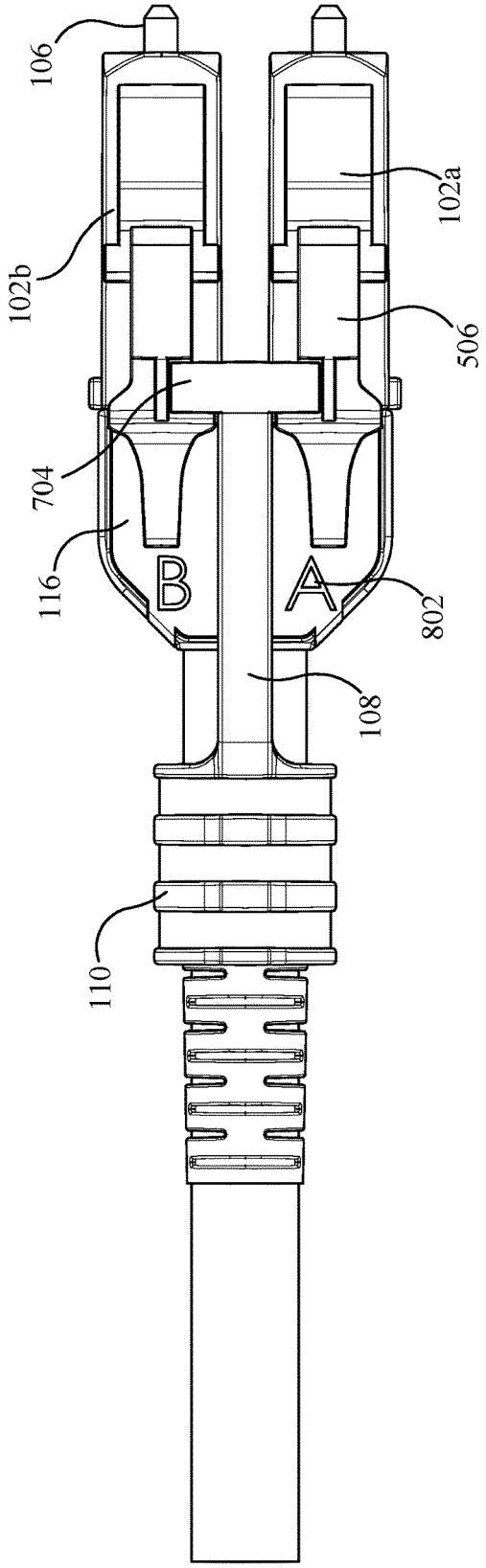

FIG. 8B

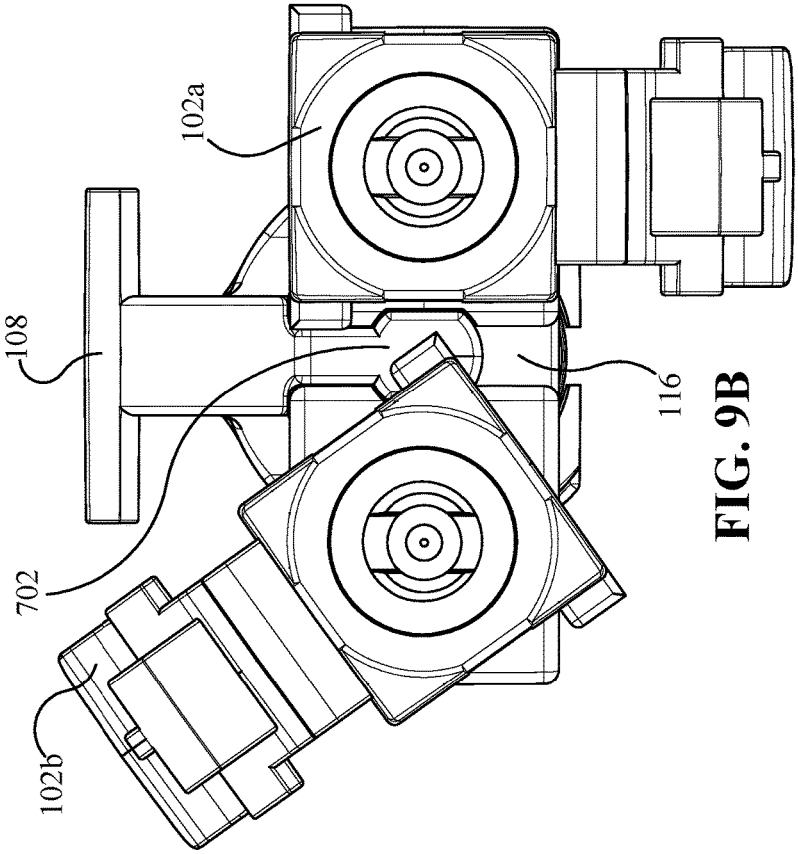

FIG. 9B

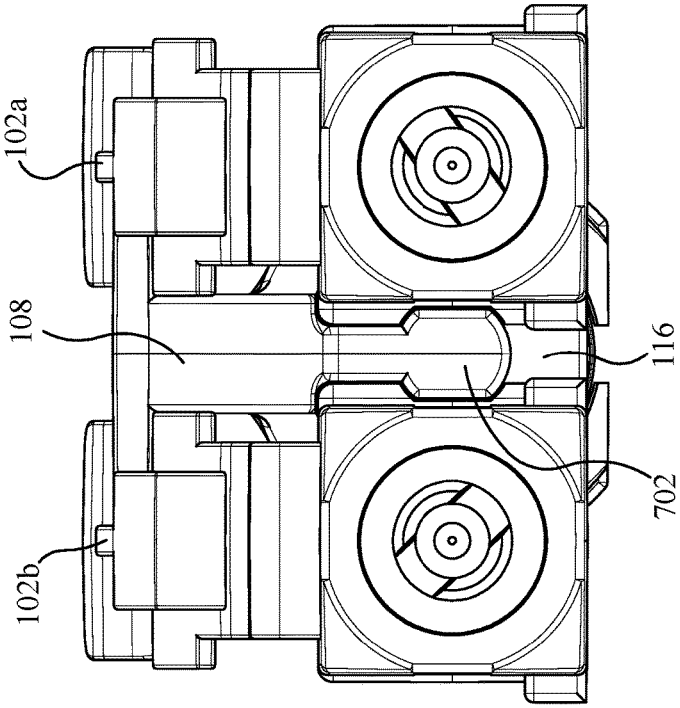

FIG. 9A

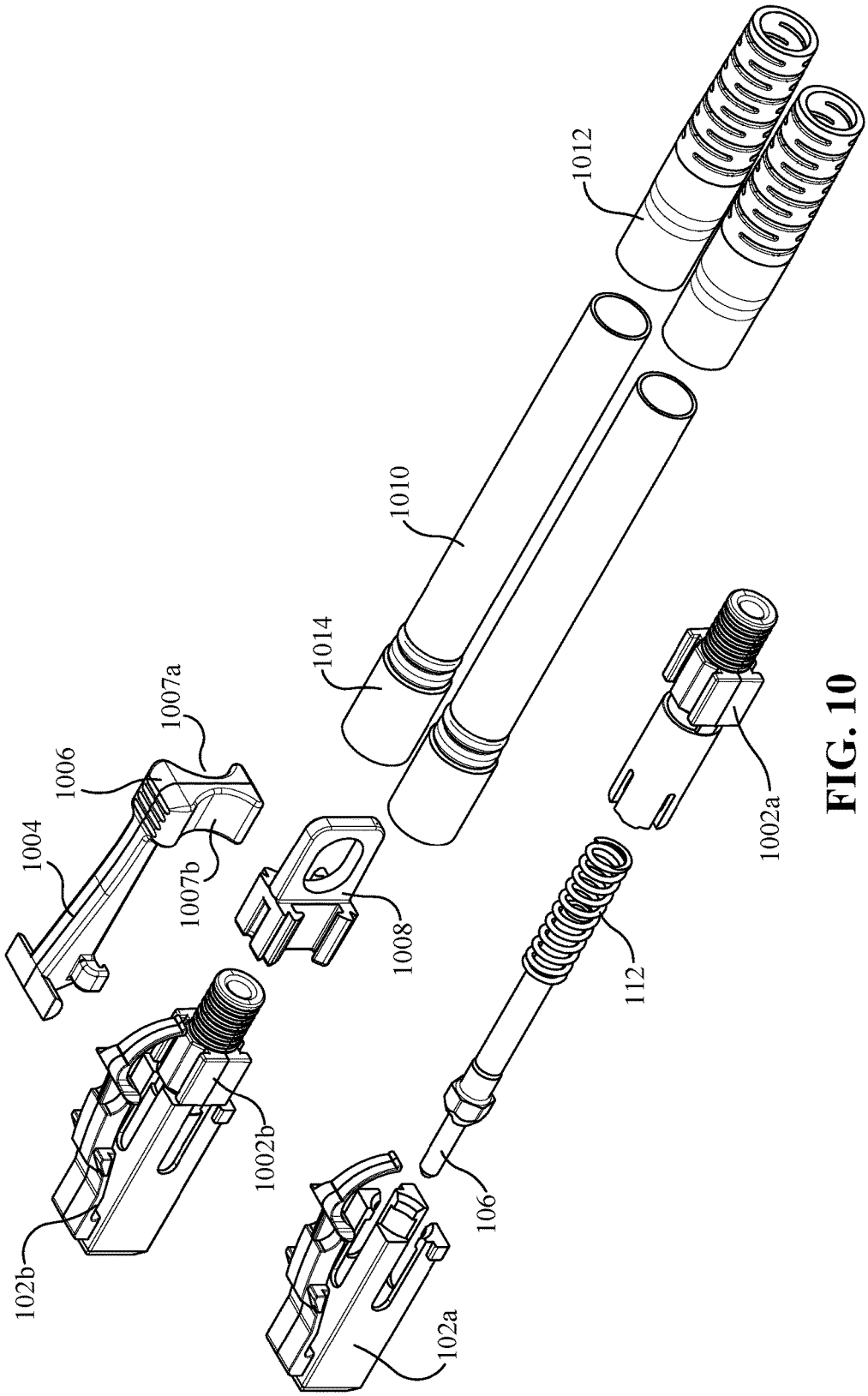
1012
1010
1014
1007a
1006
1004
1007b
1008
1002a
112
1002b
106
102b
102a

FIG. 10

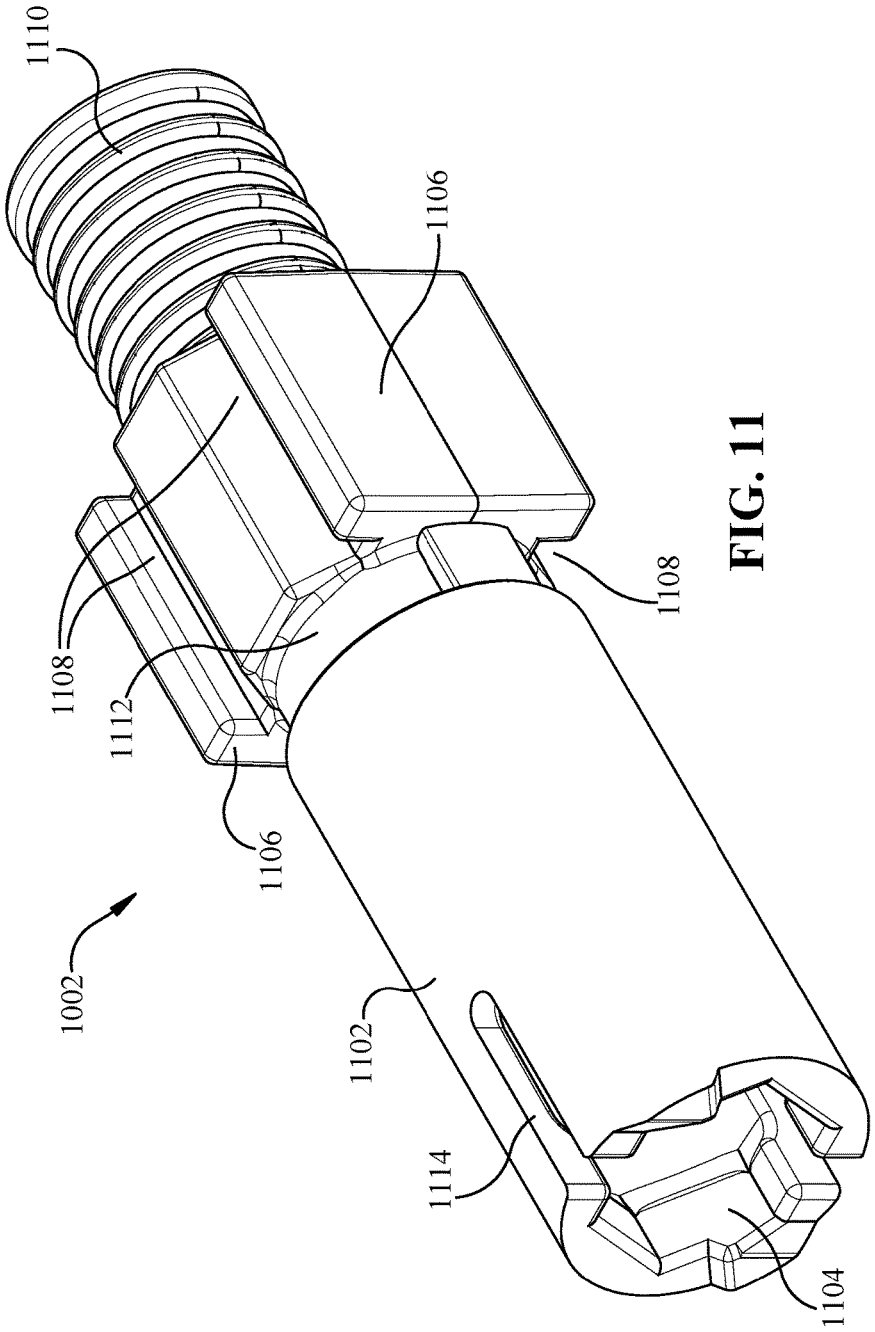

FIG. 11

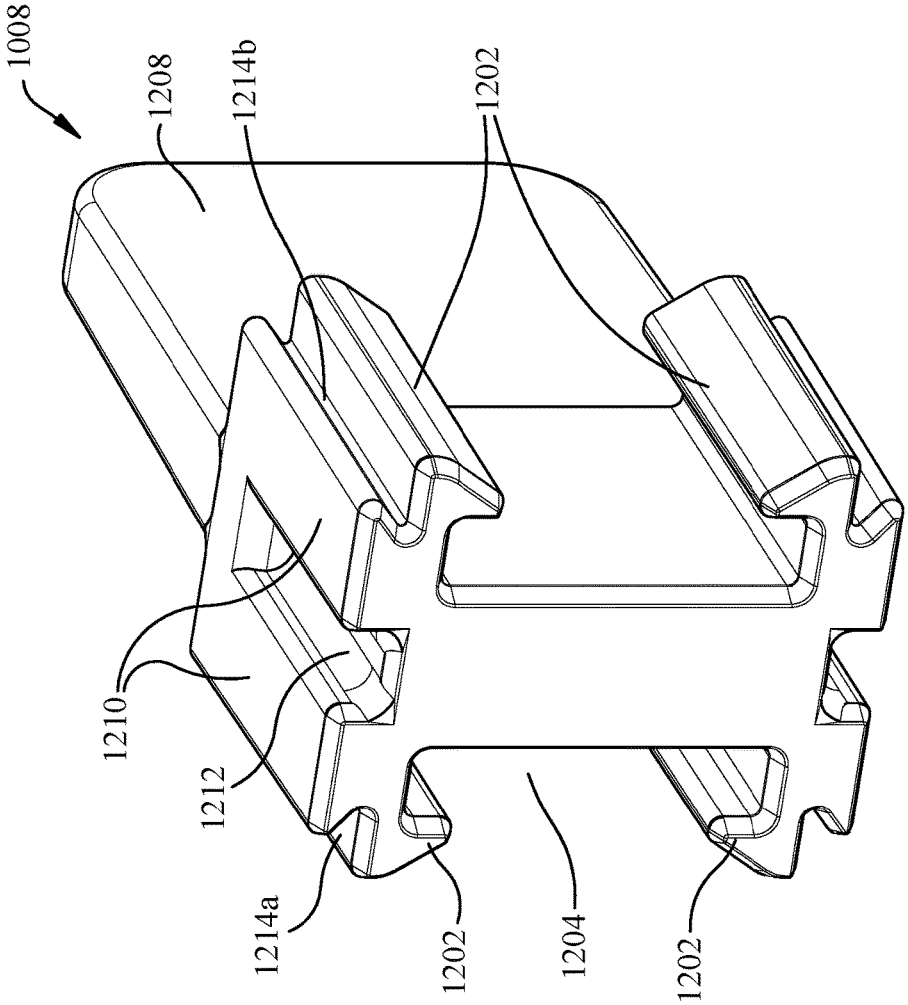

FIG. 12

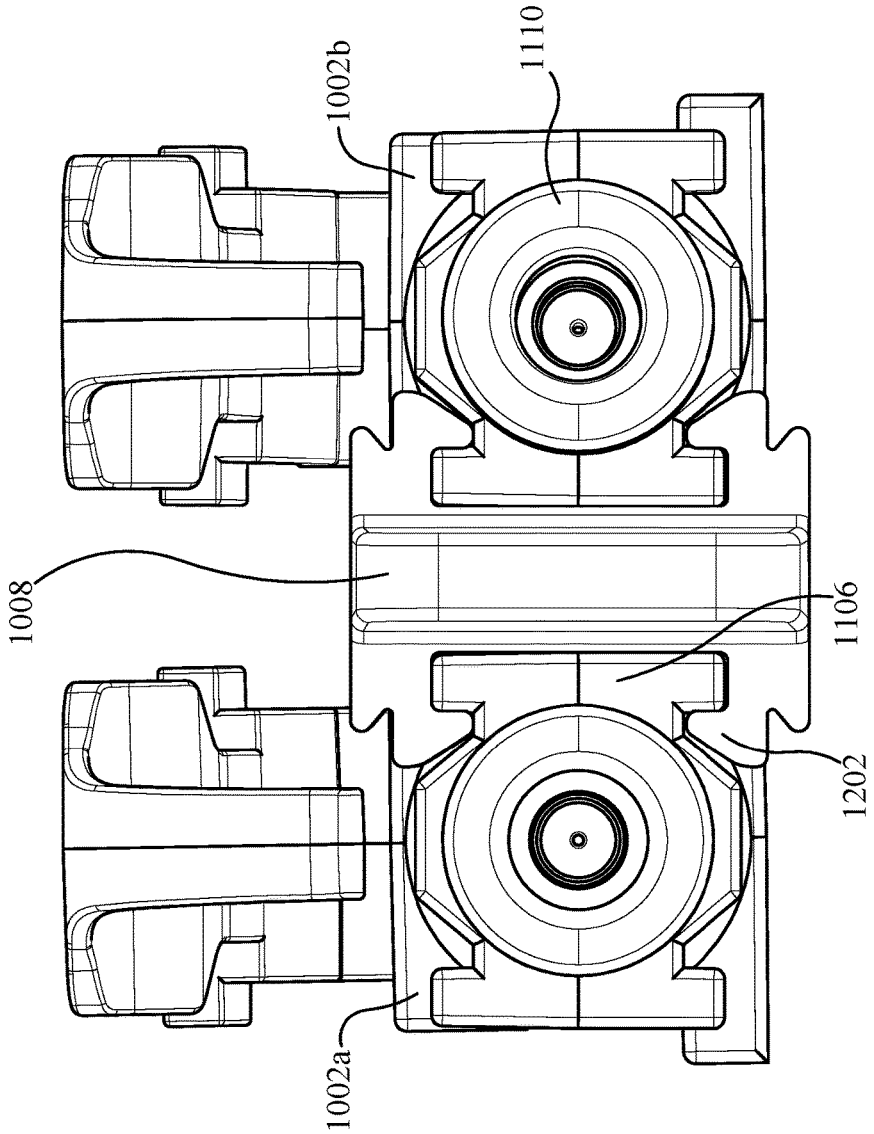

FIG. 13

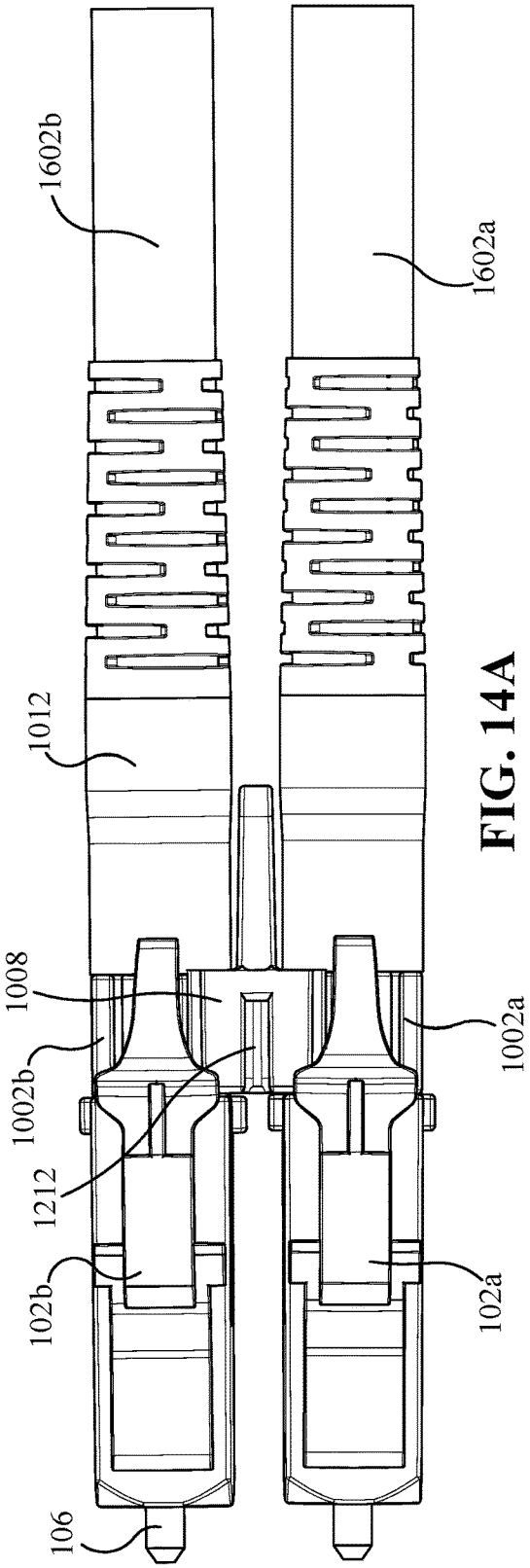

FIG. 14A

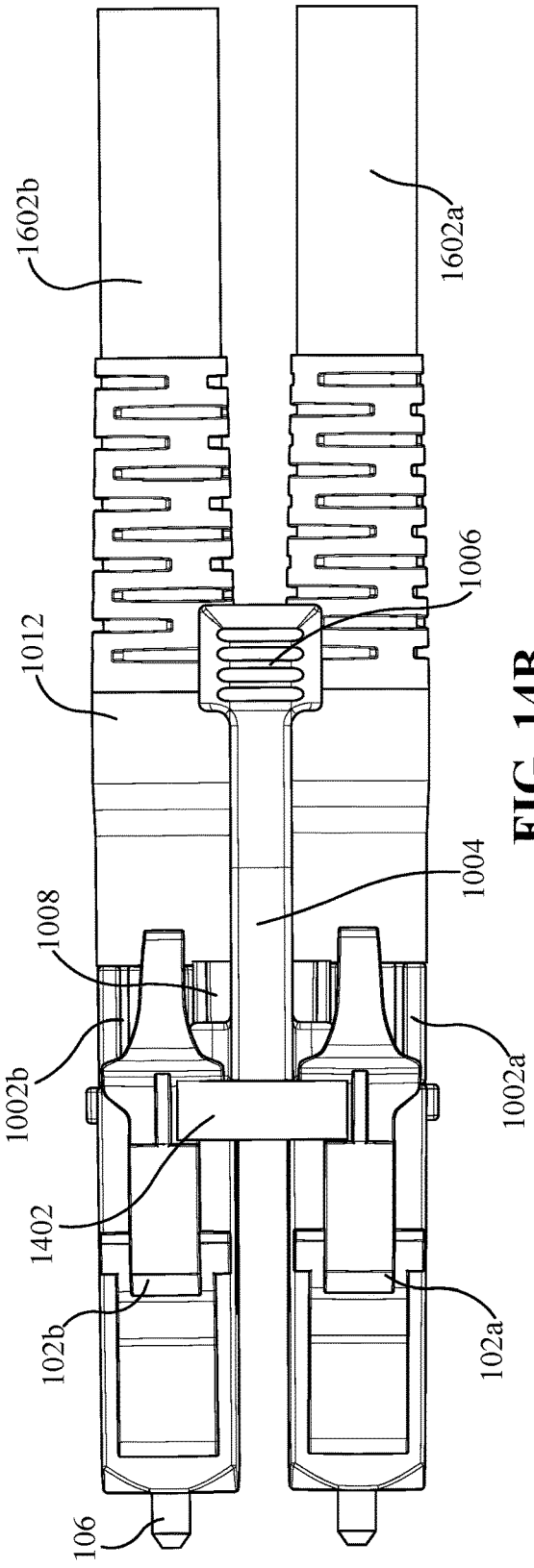
1602b
1012
1008
1002b
1402
102b
106
1004
1006
1602a
1002a
102a

FIG. 14B

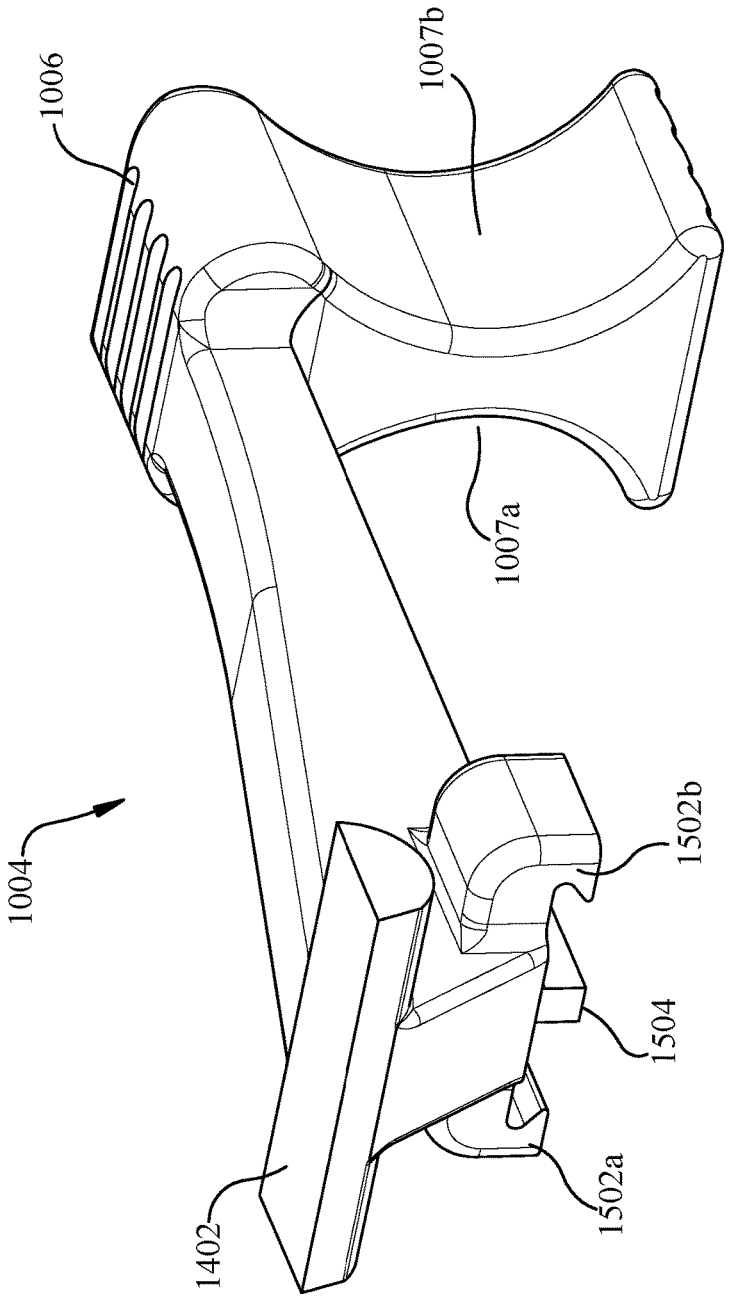

FIG. 15

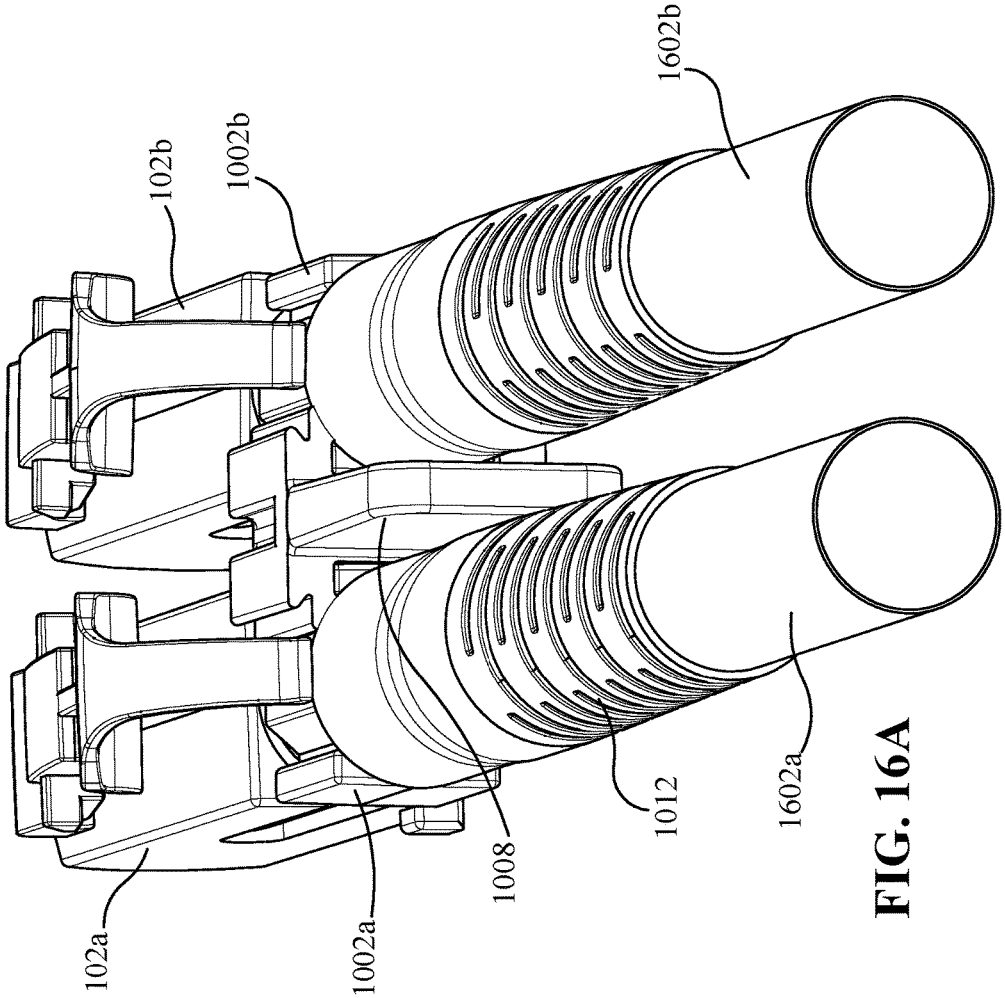

FIG. 16A

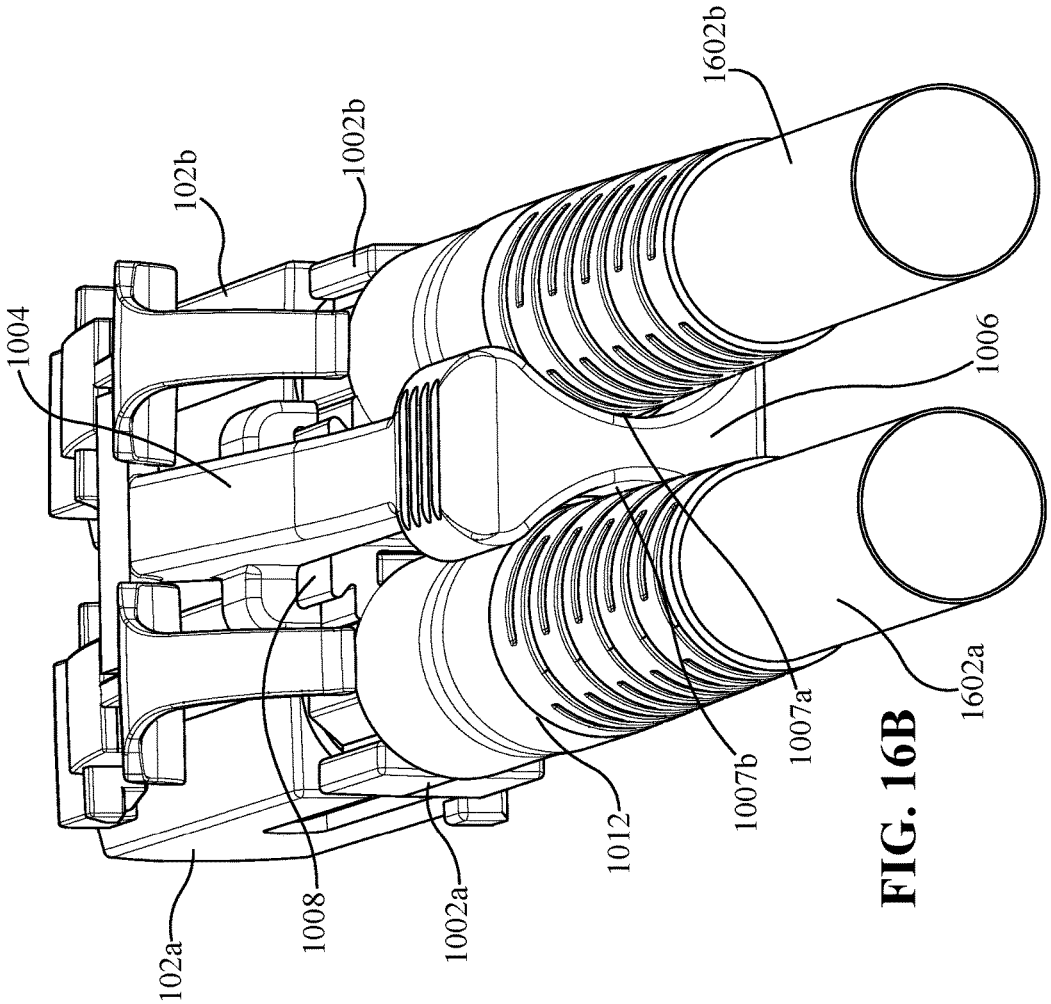
1004
102b
1002b
1602b
1006
102a
1008
1002a
1012
1007b
1007a
1602a

FIG. 16B

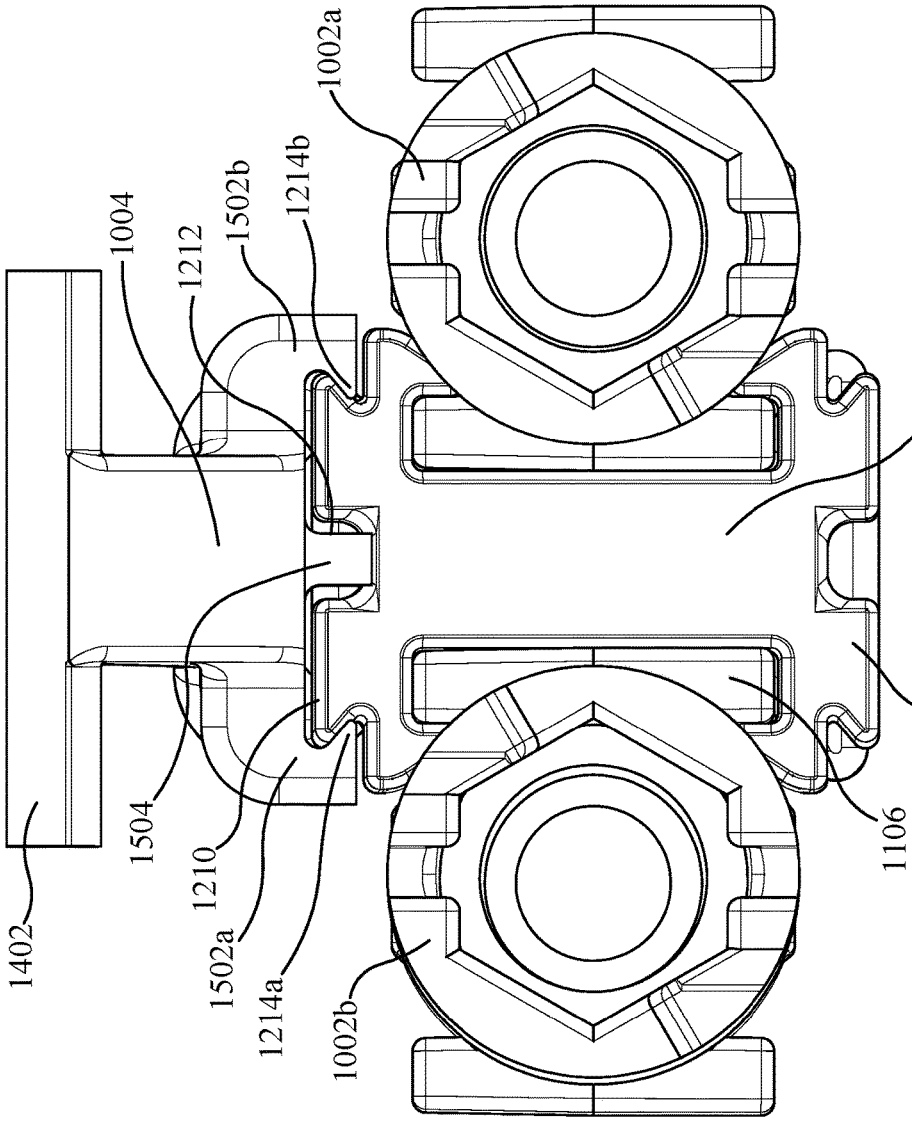
1402
1004
1212
1502b
1214b
1002a
1504
1210
1502a
1214a
1002b
1008
1106
1210

FIG. 17

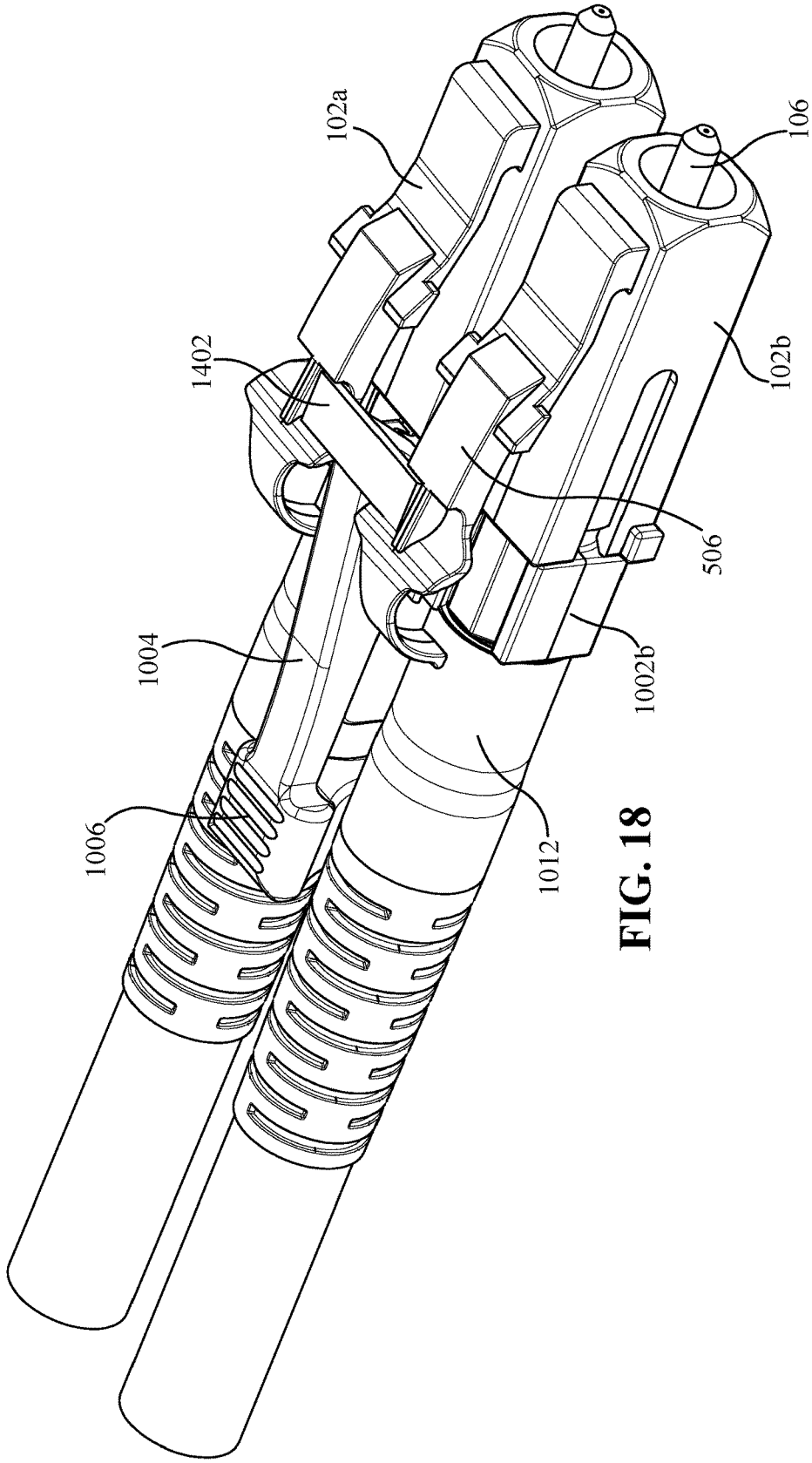

FIG. 18

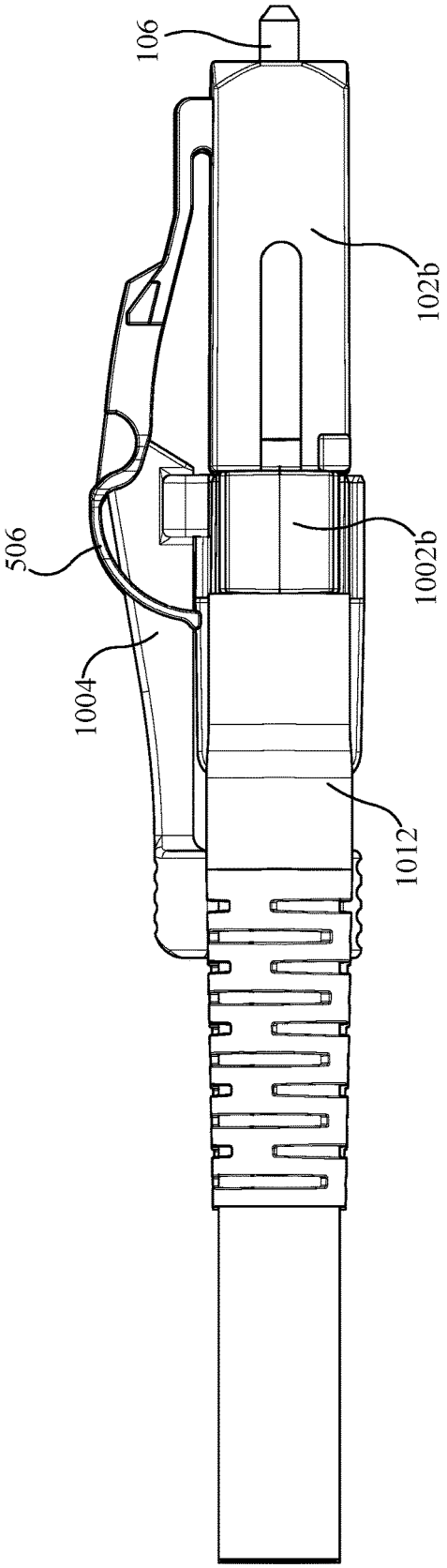

FIG. 19

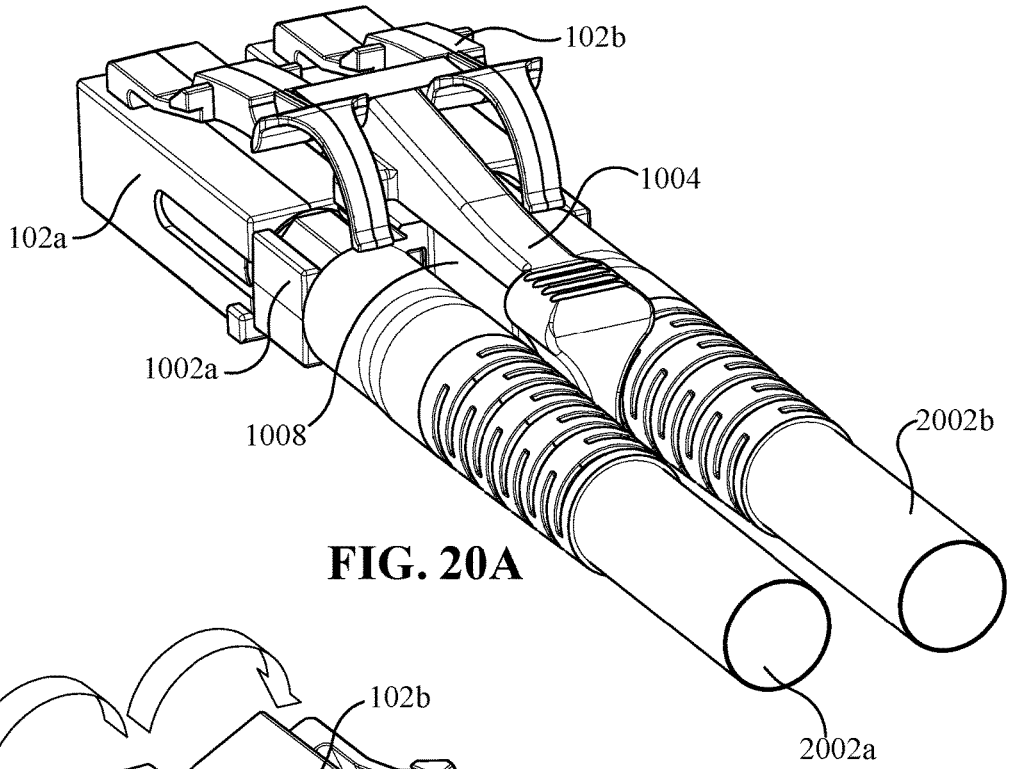

FIG. 20A

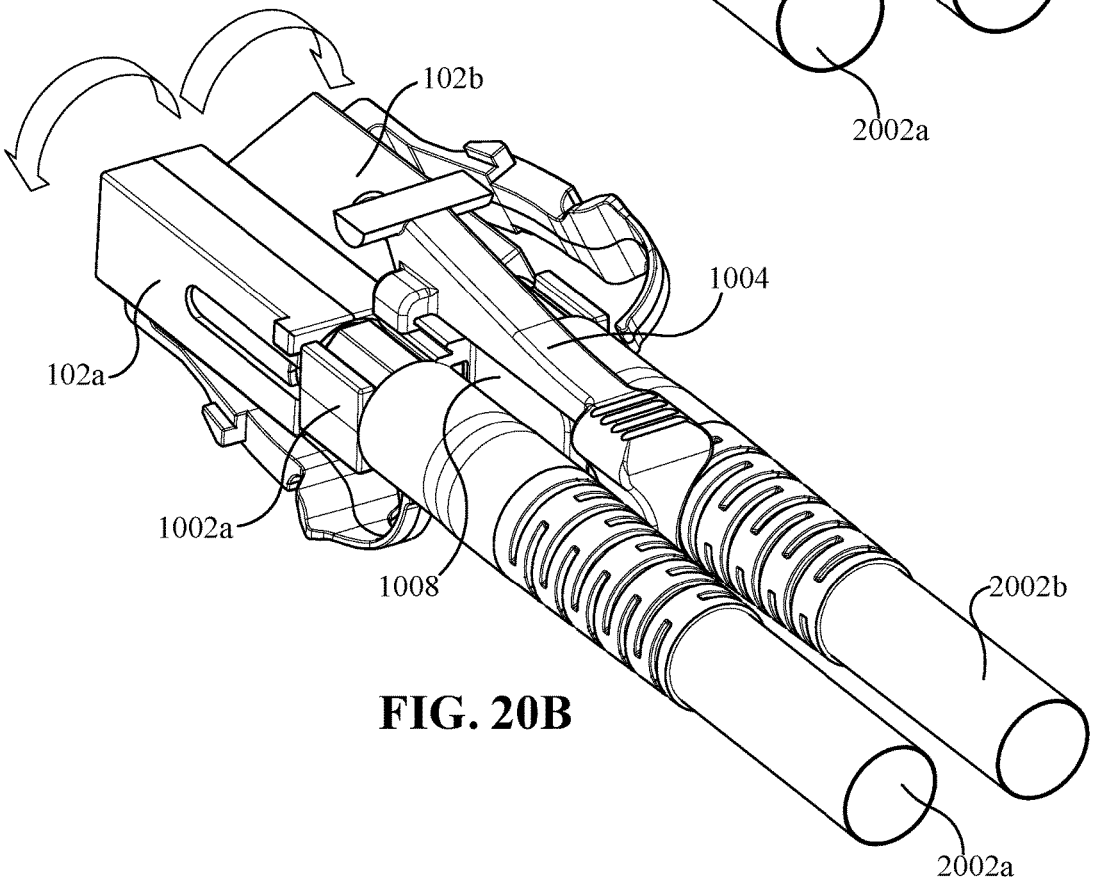

FIG. 20B

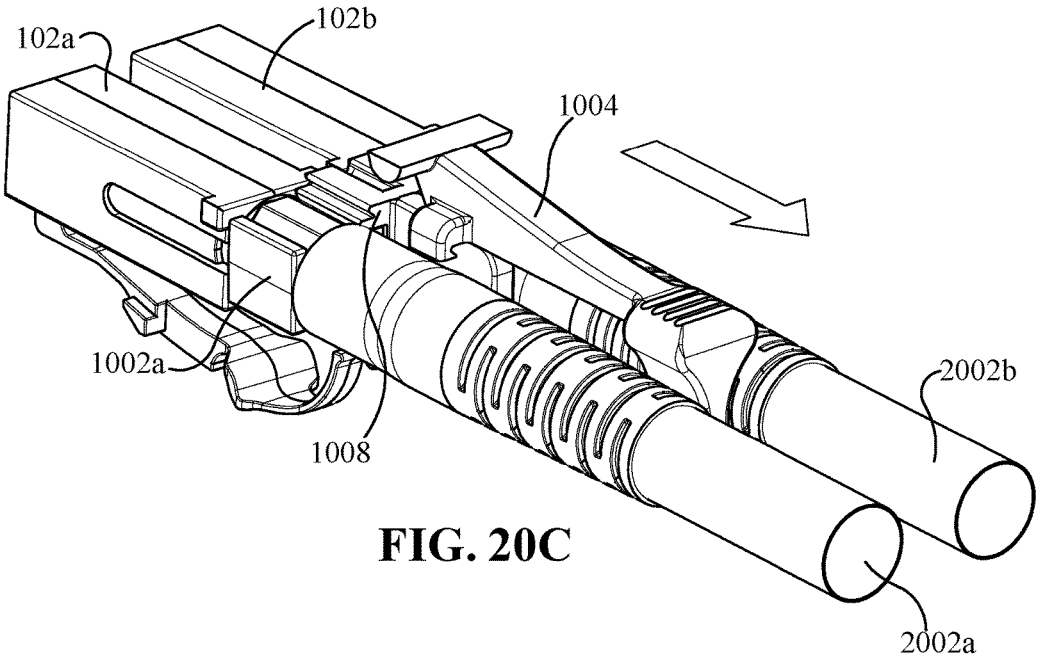

FIG. 20C

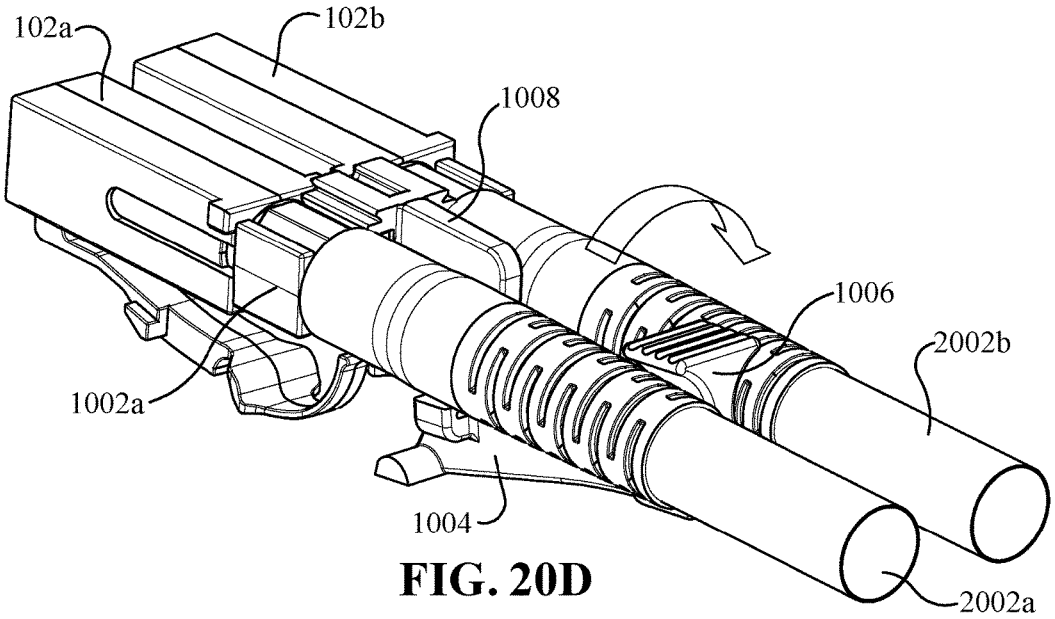

FIG. 20D

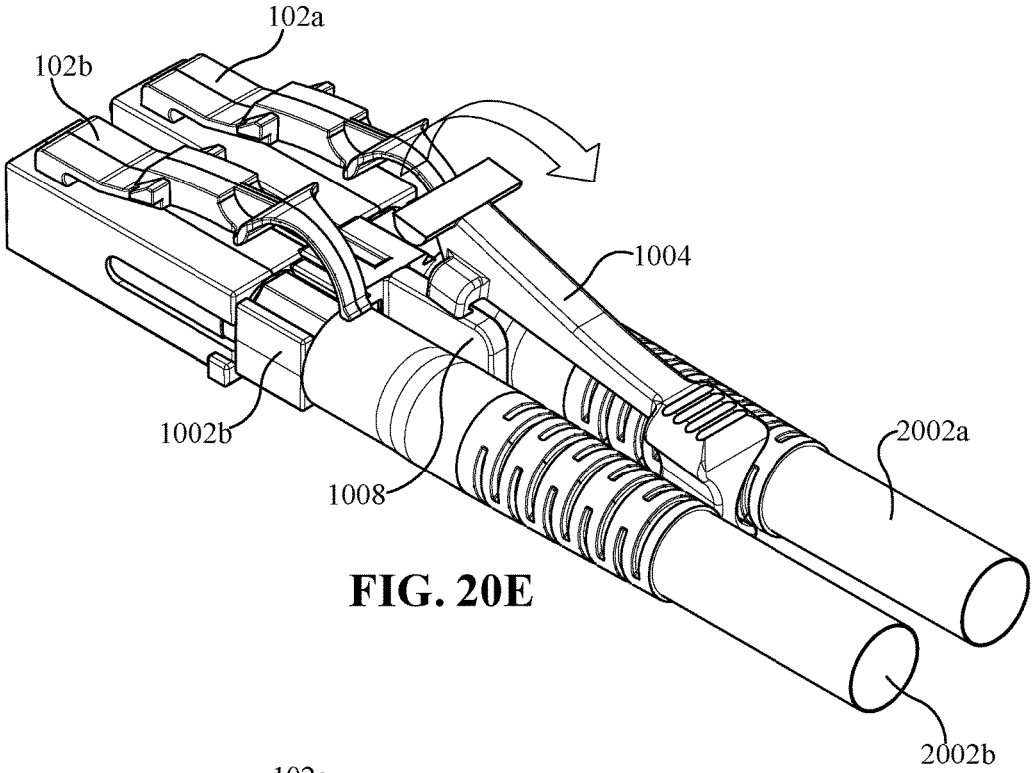

FIG. 20E

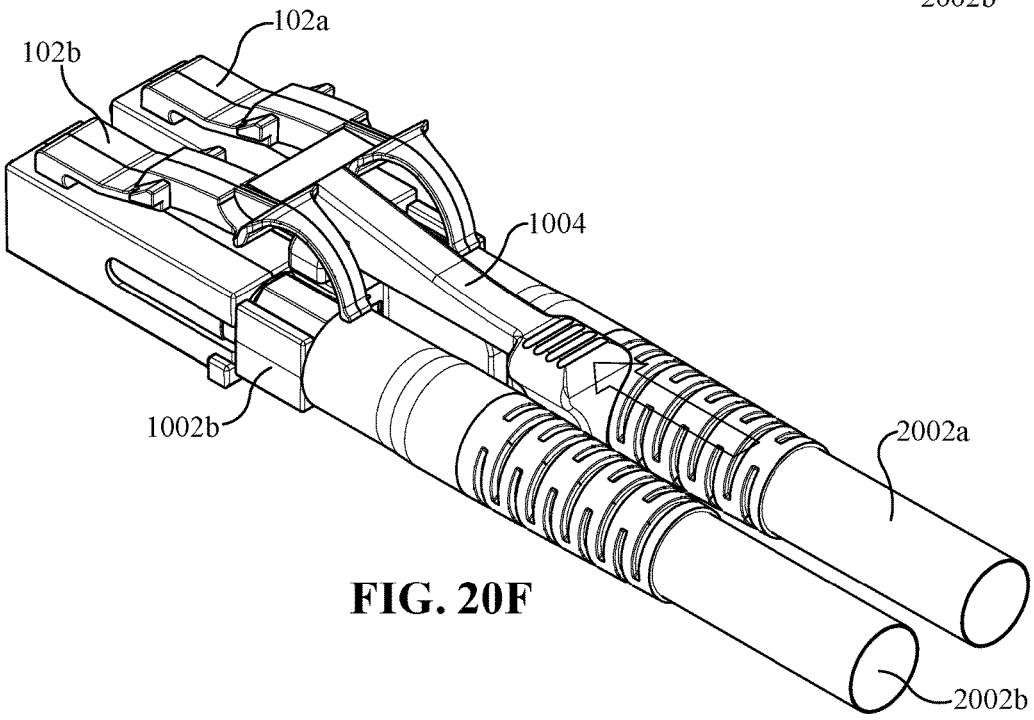

FIG. 20F

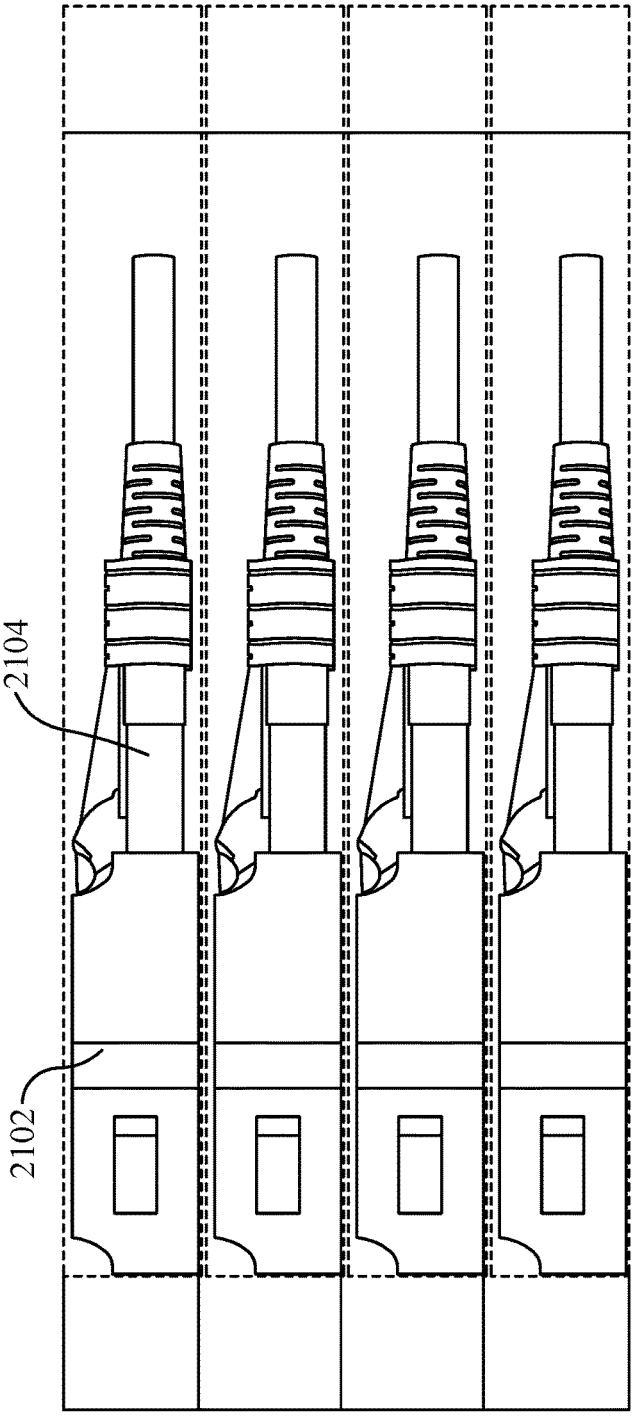

FIG. 21

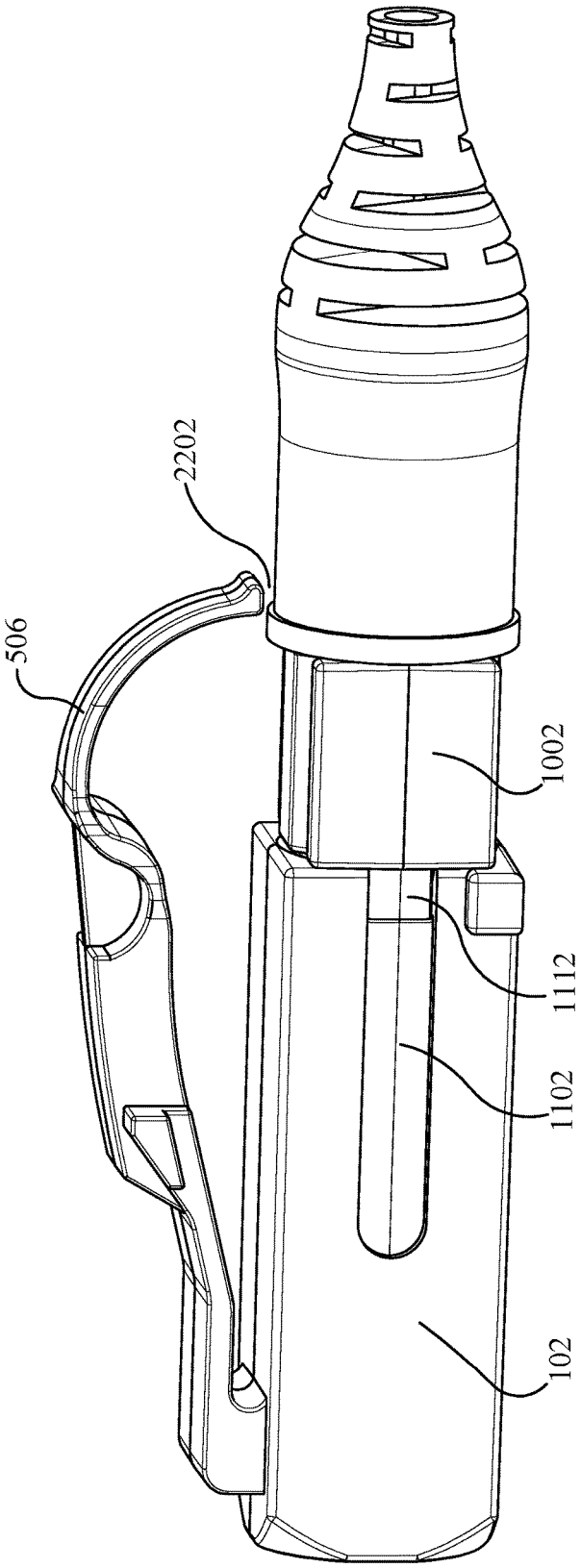

FIG. 22

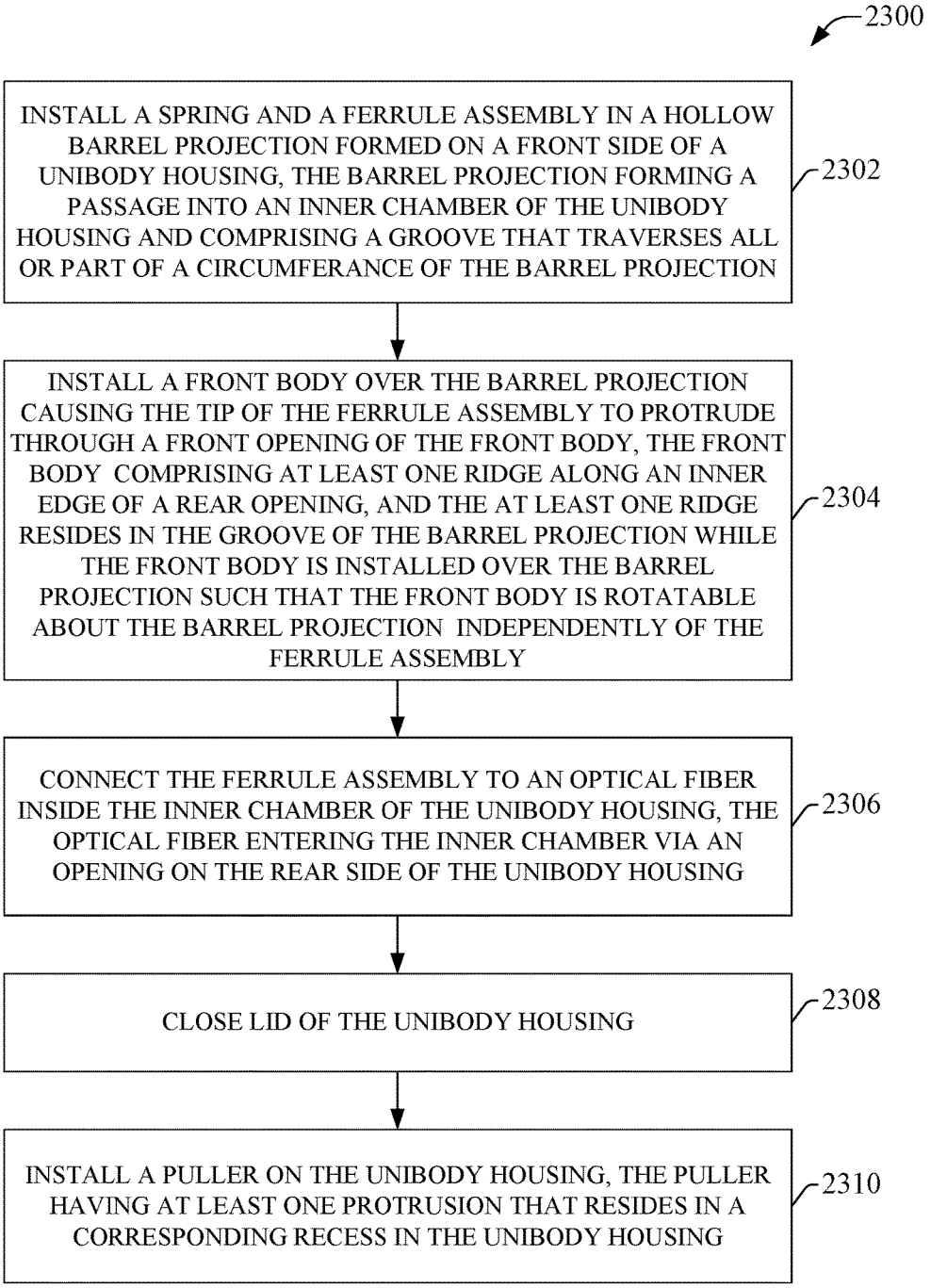
2300
INSTALL A SPRING AND A FERRULE ASSEMBLY IN A HOLLOW BARREL PROJECTION FORMED ON A FRONT SIDE OF A UNIBODY HOUSING, THE BARREL PROJECTION FORMING A PASSAGE INTO AN INNER CHAMBER OF THE UNIBODY HOUSING AND COMPRISING A GROOVE THAT TRAVERSES ALL OR PART OF A CIRCUMFERANCE OF THE BARREL PROJECTION
2302
INSTALL A FRONT BODY OVER THE BARREL PROJECTION CAUSING THE TIP OF THE FERRULE ASSEMBLY TO PROTRUDE THROUGH A FRONT OPENING OF THE FRONT BODY, THE FRONT BODY COMPRISING AT LEAST ONE RIDGE ALONG AN INNER EDGE OF A REAR OPENING, AND THE AT LEAST ONE RIDGE RESIDES IN THE GROOVE OF THE BARREL PROJECTION WHILE THE FRONT BODY IS INSTALLED OVER THE BARREL PROJECTION SUCH THAT THE FRONT BODY IS ROTATABLE ABOUT THE BARREL PROJECTION INDEPENDENTLY OF THE FERRULE ASSEMBLY
2304
CONNECT THE FERRULE ASSEMBLY TO AN OPTICAL FIBER INSIDE THE INNER CHAMBER OF THE UNIBODY HOUSING, THE OPTICAL FIBER ENTERING THE INNER CHAMBER VIA AN OPENING ON THE REAR SIDE OF THE UNIBODY HOUSING
2306
CLOSE LID OF THE UNIBODY HOUSING
2308
INSTALL A PULLER ON THE UNIBODY HOUSING, THE PULLER HAVING AT LEAST ONE PROTRUSION THAT RESIDES IN A CORRESPONDING RECESS IN THE UNIBODY HOUSING
2310

FIG. 23

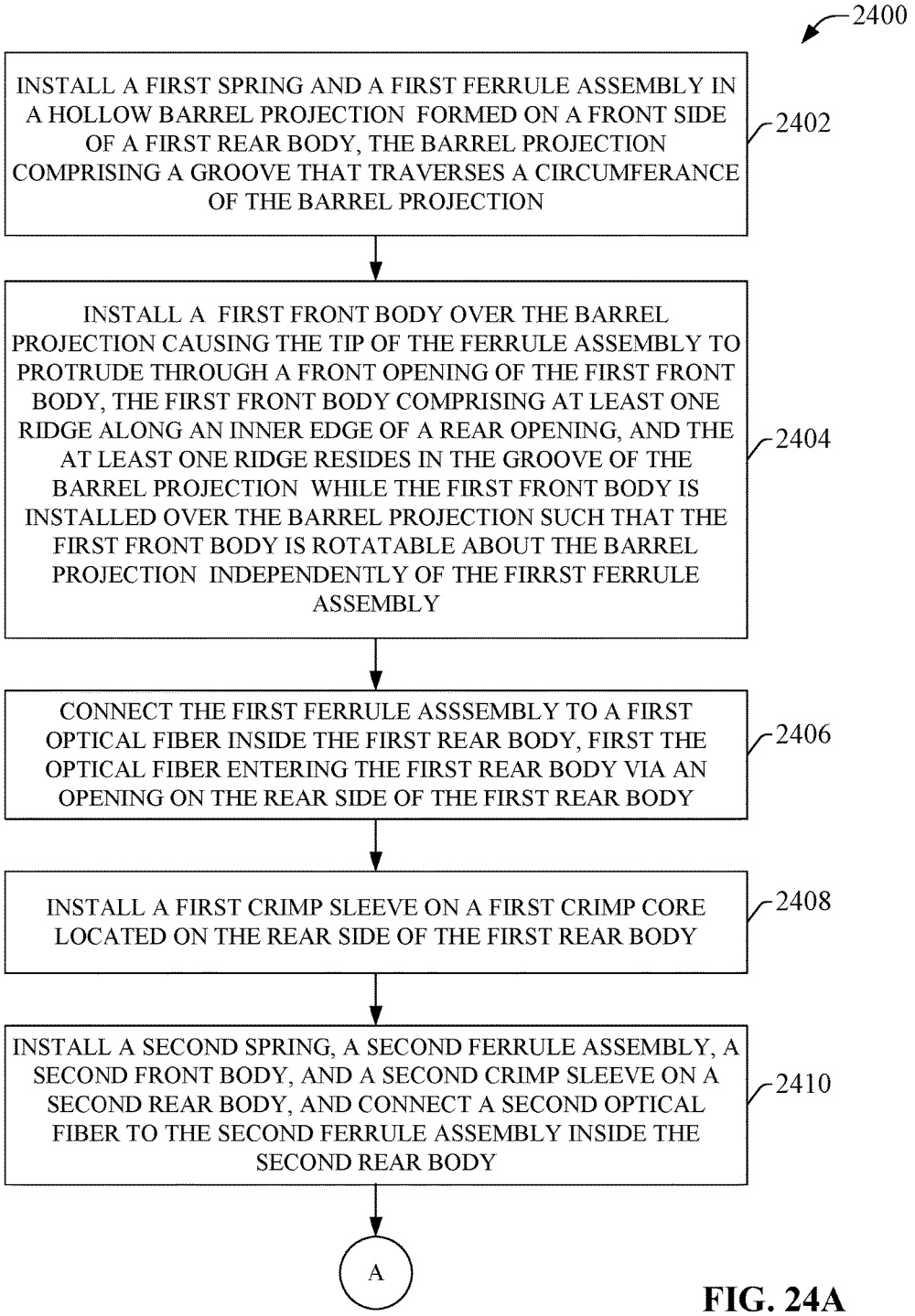
2400
INSTALL A FIRST SPRING AND A FIRST FERRULE ASSEMBLY IN A HOLLOW BARREL PROJECTION FORMED ON A FRONT SIDE OF A FIRST REAR BODY, THE BARREL PROJECTION COMPRISING A GROOVE THAT TRAVERSES A CIRCUMFERANCE OF THE BARREL PROJECTION
2402
INSTALL A FIRST FRONT BODY OVER THE BARREL PROJECTION CAUSING THE TIP OF THE FERRULE ASSEMBLY TO PROTRUDE THROUGH A FRONT OPENING OF THE FIRST FRONT BODY, THE FIRST FRONT BODY COMPRISING AT LEAST ONE RIDGE ALONG AN INNER EDGE OF A REAR OPENING, AND THE AT LEAST ONE RIDGE RESIDES IN THE GROOVE OF THE BARREL PROJECTION WHILE THE FIRST FRONT BODY IS INSTALLED OVER THE BARREL PROJECTION SUCH THAT THE FIRST FRONT BODY IS ROTATABLE ABOUT THE BARREL PROJECTION INDEPENDENTLY OF THE FIRRST FERRULE ASSEMBLY
2404
CONNECT THE FIRST FERRULE ASSSEMBLY TO A FIRST OPTICAL FIBER INSIDE THE FIRST REAR BODY, FIRST THE OPTICAL FIBER ENTERING THE FIRST REAR BODY VIA AN OPENING ON THE REAR SIDE OF THE FIRST REAR BODY
2406
INSTALL A FIRST CRIMP SLEEVE ON A FIRST CRIMP CORE LOCATED ON THE REAR SIDE OF THE FIRST REAR BODY
2408
INSTALL A SECOND SPRING, A SECOND FERRULE ASSEMBLY, A SECOND FRONT BODY, AND A SECOND CRIMP SLEEVE ON A SECOND REAR BODY, AND CONNECT A SECOND OPTICAL FIBER TO THE SECOND FERRULE ASSEMBLY INSIDE THE SECOND REAR BODY
2410
A

FIG. 24A

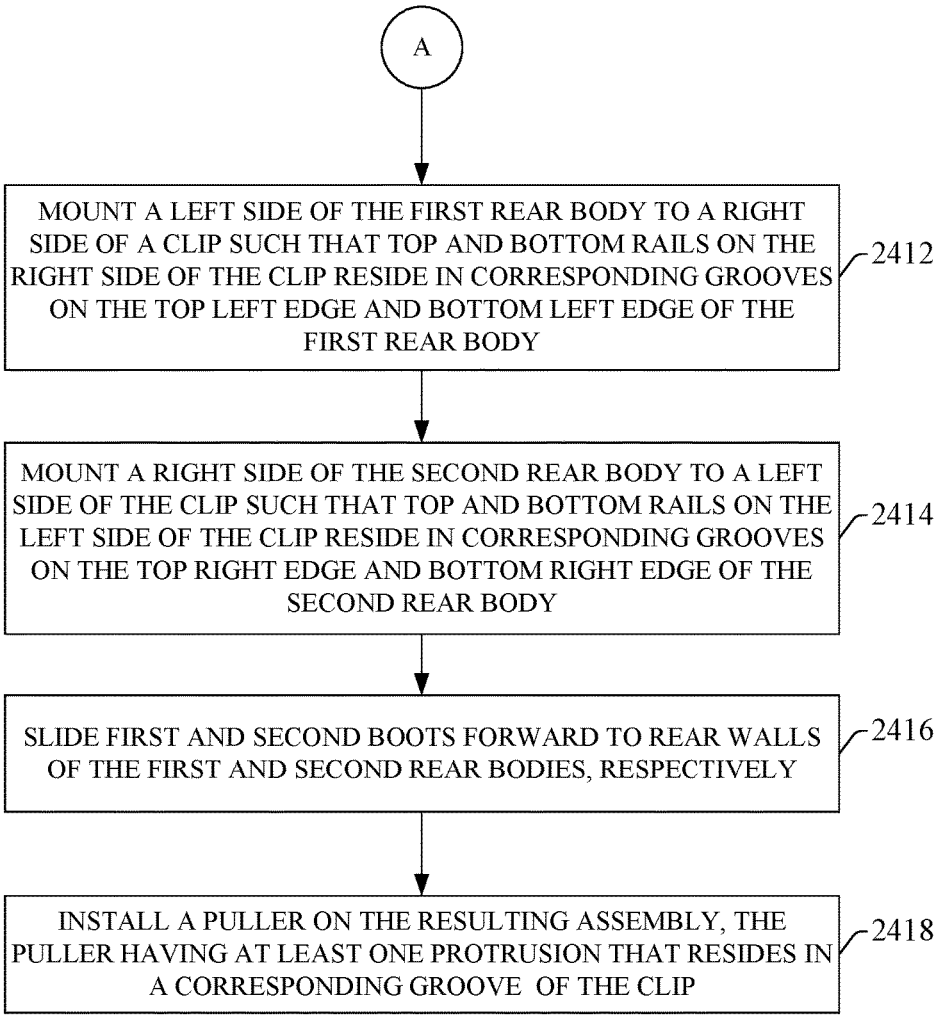
A
MOUNT A LEFT SIDE OF THE FIRST REAR BODY TO A RIGHT SIDE OF A CLIP SUCH THAT TOP AND BOTTOM RAILS ON THE RIGHT SIDE OF THE CLIP RESIDE IN CORRESPONDING GROOVES ON THE TOP LEFT EDGE AND BOTTOM LEFT EDGE OF THE FIRST REAR BODY
2412
MOUNT A RIGHT SIDE OF THE SECOND REAR BODY TO A LEFT SIDE OF THE CLIP SUCH THAT TOP AND BOTTOM RAILS ON THE LEFT SIDE OF THE CLIP RESIDE IN CORRESPONDING GROOVES ON THE TOP RIGHT EDGE AND BOTTOM RIGHT EDGE OF THE SECOND REAR BODY
2414
SLIDE FIRST AND SECOND BOOTS FORWARD TO REAR WALLS OF THE FIRST AND SECOND REAR BODIES, RESPECTIVELY
2416
INSTALL A PULLER ON THE RESULTING ASSEMBLY, THE PULLER HAVING AT LEAST ONE PROTRUSION THAT RESIDES IN A CORRESPONDING GROOVE OF THE CLIP
2418

FIG. 24B

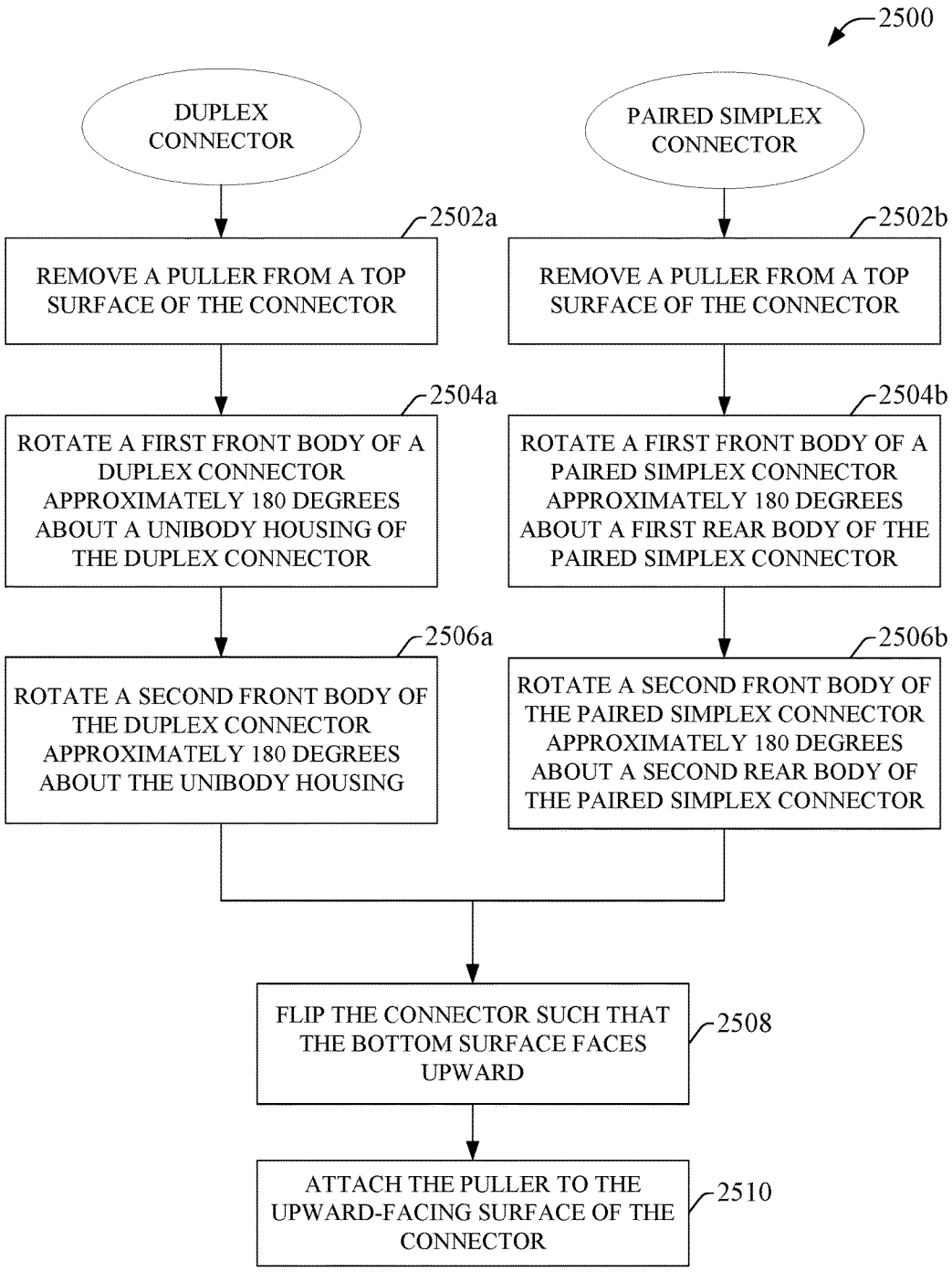
2500
DUPLEX CONNECTOR
PAIRED SIMPLEX CONNECTOR
2502a
REMOVE A PULLER FROM A TOP SURFACE OF THE CONNECTOR
2502b
REMOVE A PULLER FROM A TOP SURFACE OF THE CONNECTOR
2504a
ROTATE A FIRST FRONT BODY OF A DUPLEX CONNECTOR APPROXIMATELY 180 DEGREES ABOUT A UNIBODY HOUSING OF THE DUPLEX CONNECTOR
2504b
ROTATE A FIRST FRONT BODY OF A PAIRED SIMPLEX CONNECTOR APPROXIMATELY 180 DEGREES ABOUT A FIRST REAR BODY OF THE PAIRED SIMPLEX CONNECTOR
2506a
ROTATE A SECOND FRONT BODY OF THE DUPLEX CONNECTOR APPROXIMATELY 180 DEGREES ABOUT THE UNIBODY HOUSING
2506b
ROTATE A SECOND FRONT BODY OF THE PAIRED SIMPLEX CONNECTOR APPROXIMATELY 180 DEGREES ABOUT A SECOND REAR BODY OF THE PAIRED SIMPLEX CONNECTOR
FLIP THE CONNECTOR SUCH THAT THE BOTTOM SURFACE FACES UPWARD
2508
ATTACH THE PULLER TO THE UPWARD-FACING SURFACE OF THE CONNECTOR
2510

FIG. 25

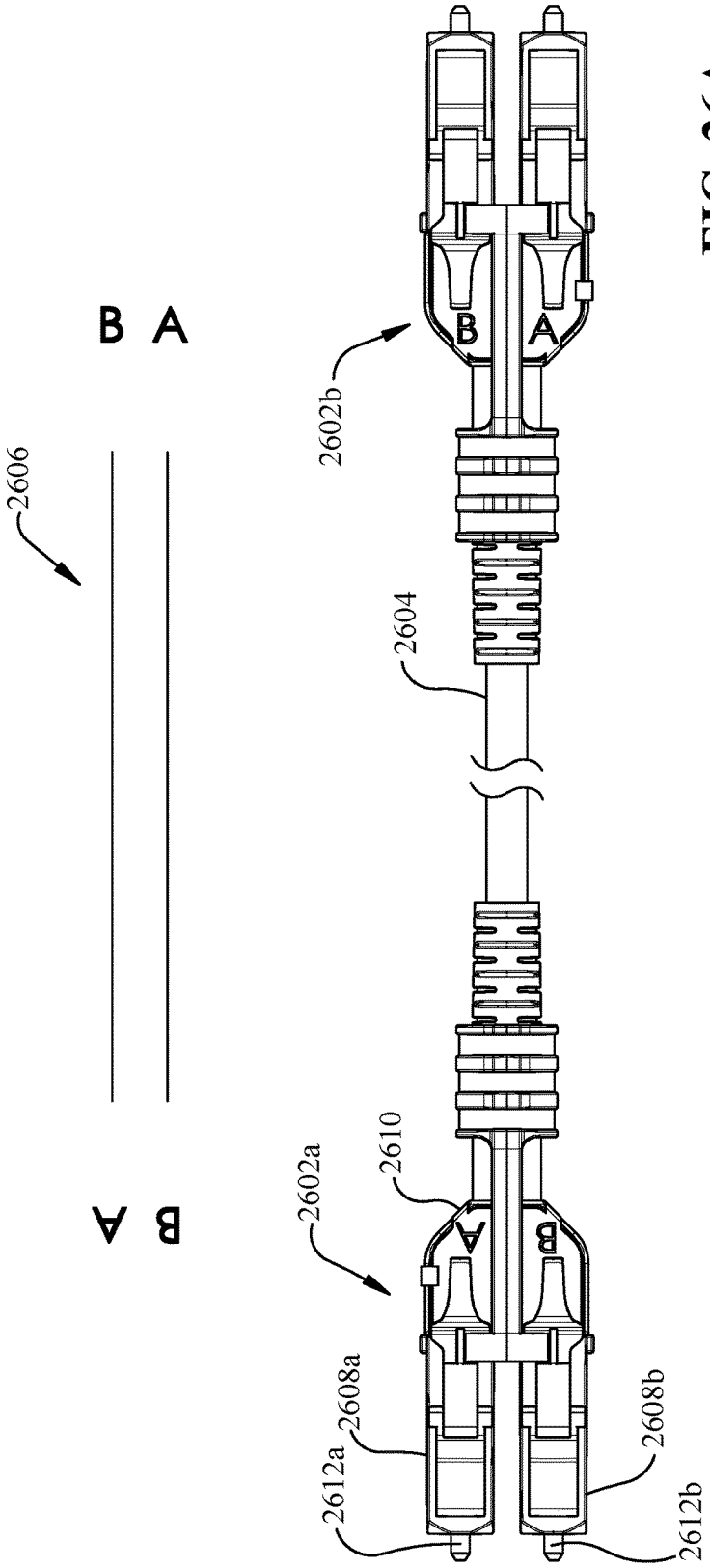

FIG. 26A

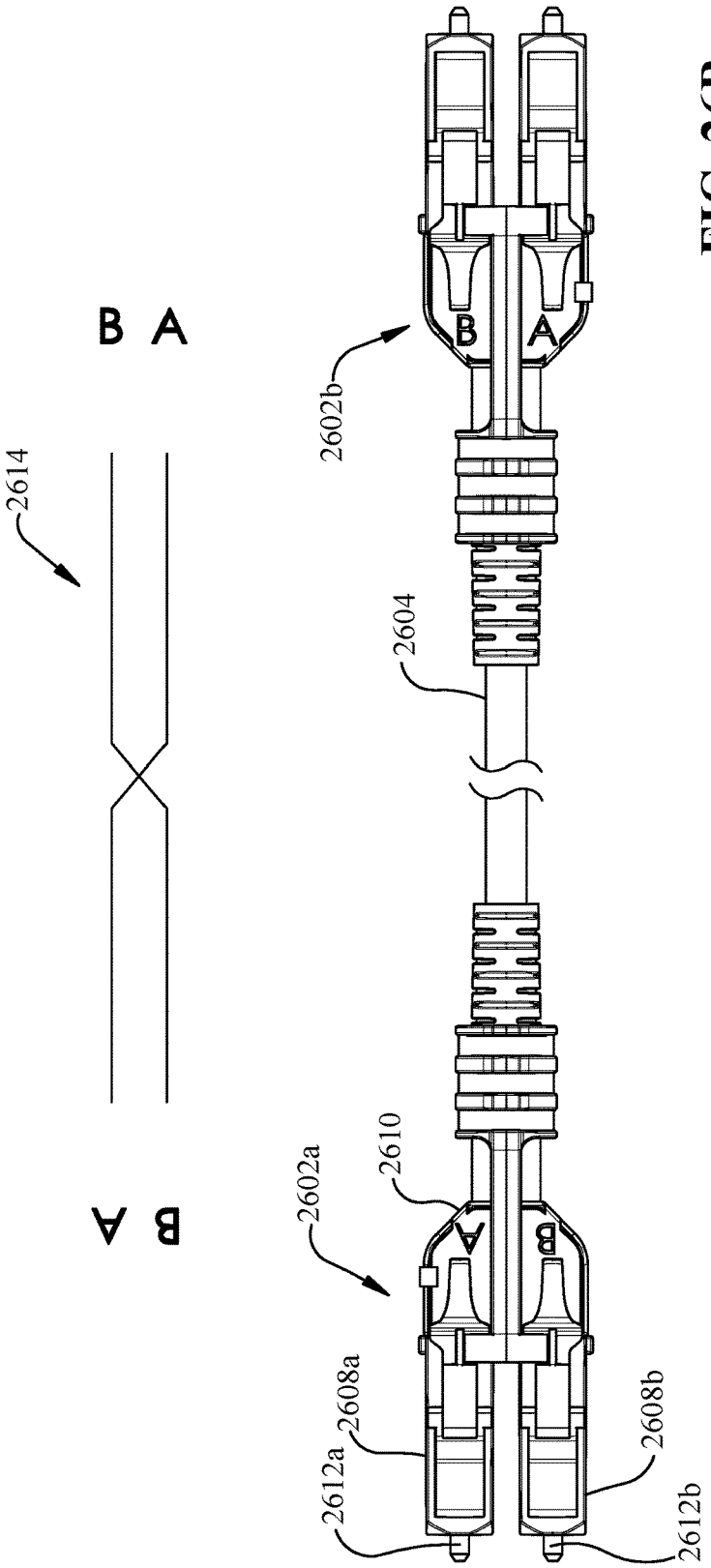

FIG. 26B

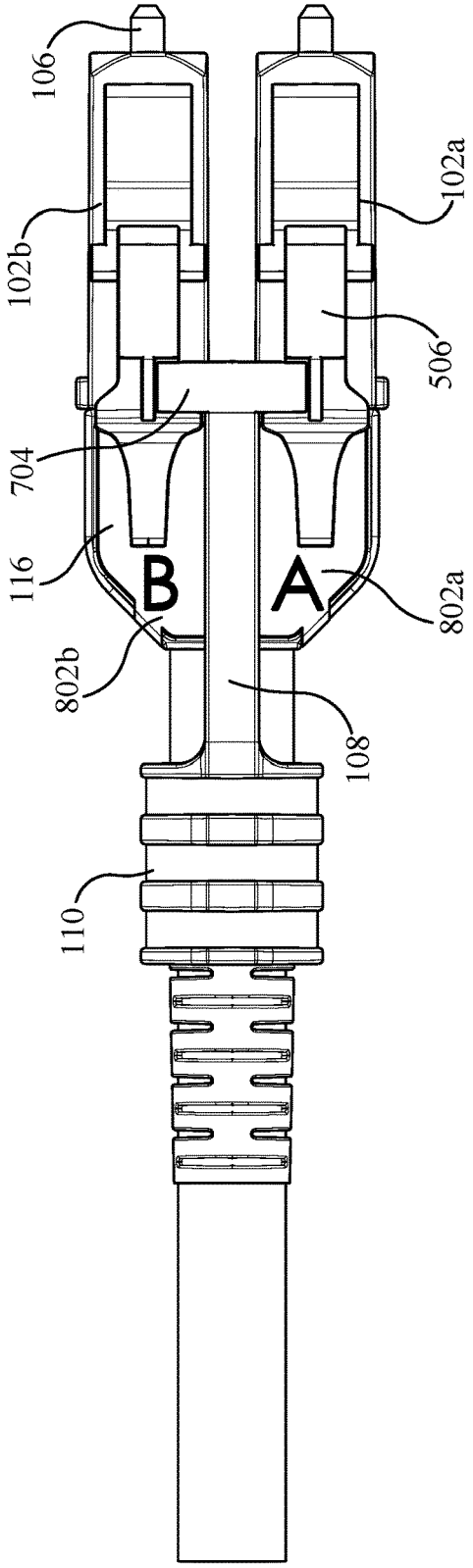

FIG. 27A

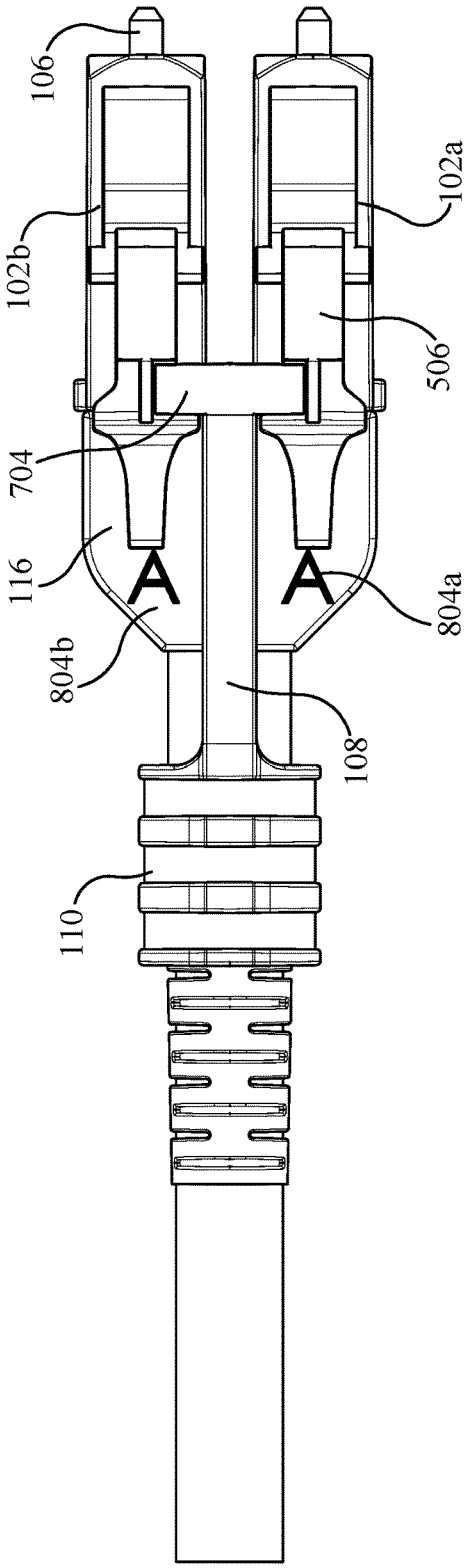

FIG. 27B

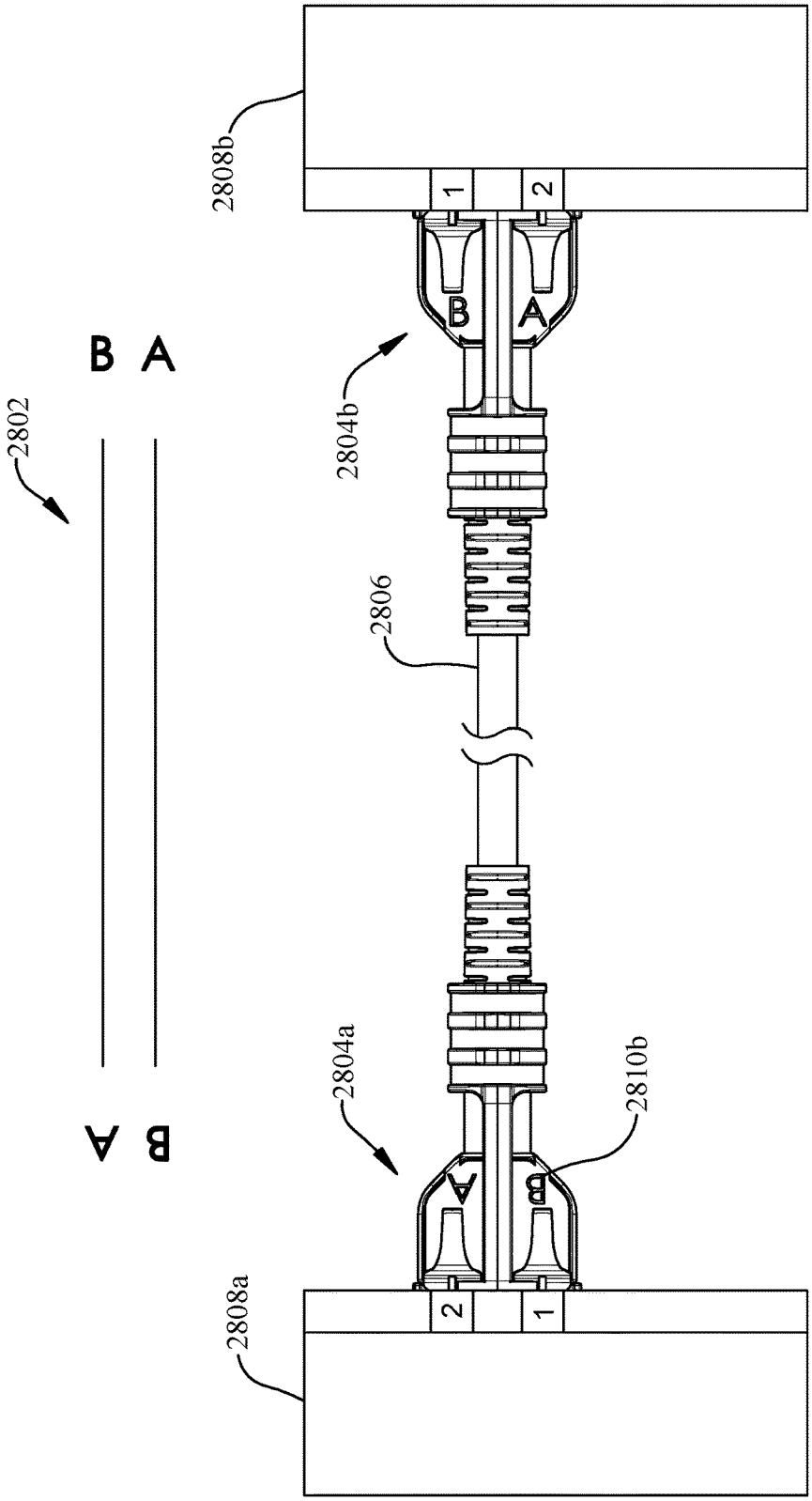

FIG. 28A

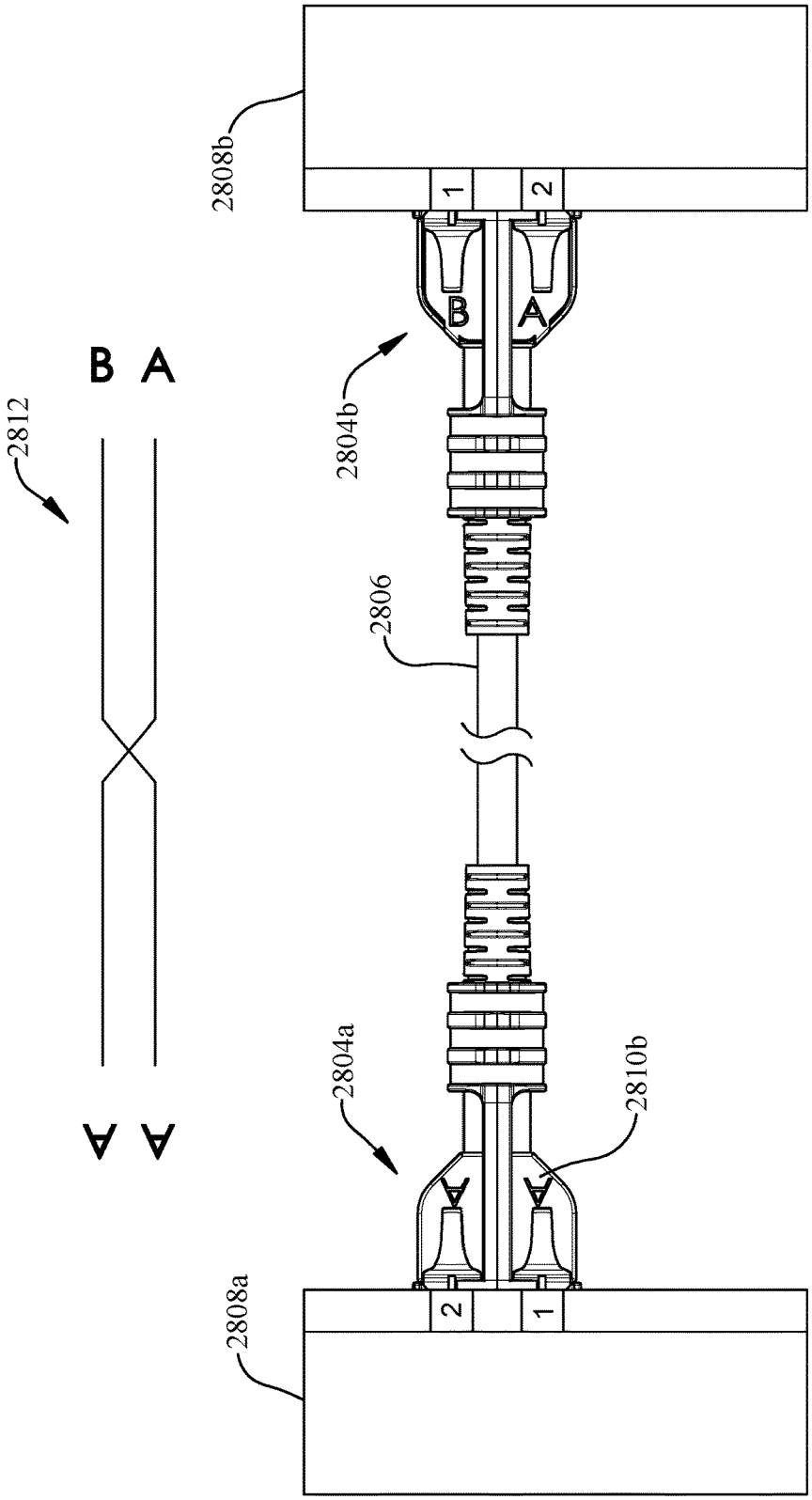

FIG. 28B

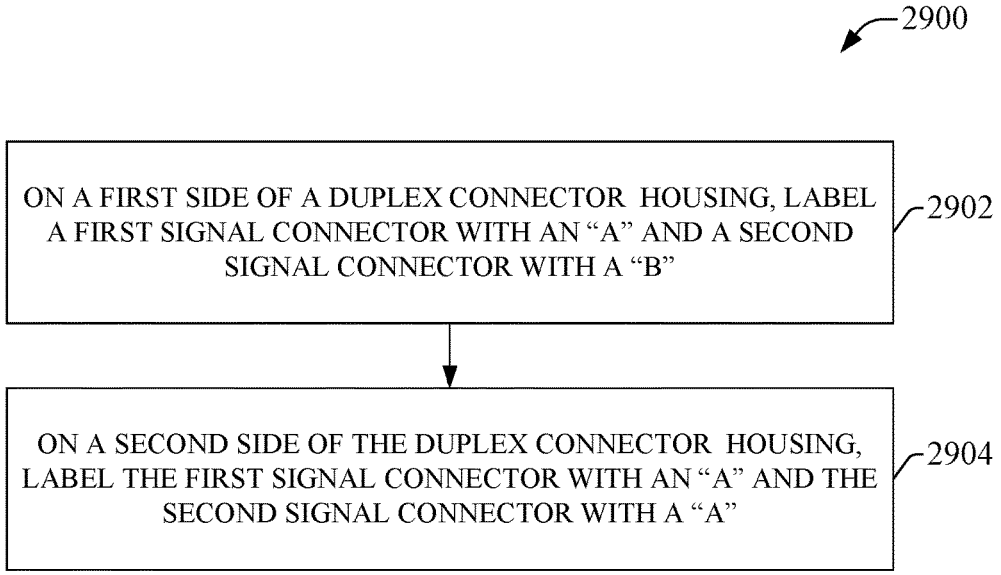
2900
ON A FIRST SIDE OF A DUPLEX CONNECTOR HOUSING, LABEL A FIRST SIGNAL CONNECTOR WITH AN "A" AND A SECOND SIGNAL CONNECTOR WITH A "B"
2902
ON A SECOND SIDE OF THE DUPLEX CONNECTOR HOUSING, LABEL THE FIRST SIGNAL CONNECTOR WITH AN "A" AND THE SECOND SIGNAL CONNECTOR WITH A "A"
2904

FIG. 29

POLARITY IDENTIFICATION FOR POLARITY REVERSING DUPLEX UNIBODY CONNECTORS

CROSS-REFERENCE TO RELATED APPLICATIONS

This application is a continuation-in-part of, and claims priority to each of, U.S. patent application Ser. No. 15/260,305, filed on Sep. 8, 2016 and entitled "FIBER OPTIC CONNECTOR," which application claims priority to U.S. Provisional Patent Application Ser. No. 62/321,145, filed on Apr. 11, 2016, and entitled "DUPLEX FIBER OPTIC COMPONENTS SUITABLE FOR POLARITY REVERSAL," the entireties of each of which applications are hereby incorporated herein by reference.

TECHNICAL FIELD

The disclosed subject matter relates generally to data cabling, and, in particular, to fiber optic connectors

BACKGROUND

Many fiber optic systems employ LC fiber optic connectors for termination and connectivity of fiber optic cables. The small form factor of these LC connectors allows a large number of fiber optic cables to be connected in high density arrays, such as those found in fiber optic patch panels used in data centers. Duplexed LC connectors together house two optical fibers each of which is terminated on a respective ferrule that protrude from the front of the duplexed connectors, thereby providing termination and connectivity for a transmit fiber and a receive fiber.

The small form factor of the LC connector—whether used as a single connector ("simplex") or as a duplexed pair—affords a number of advantages, particularly in high density environment. There are, however, a number of functional and perceptual issues inherent in conventional LC connector designs.

For example, when used in congested environments, such as fiber optic patch panels, the minimal spacing between adjacent LC connectors makes it difficult to both insert the LC connector into, and disconnect it from, its corresponding port in an adapter or module disposed in a patch panel.

Also, reversing the polarity in the field of patch cables pre-terminated to duplexed LC connectors can be a cumbersome task, requiring the duplexed LC connector assembly to be disassembled and the terminated ferrules within the assembly to be physically swapped before reassembling the assembly. In addition to requiring mechanical disassembly and reassembly of the duplexed LC connector assembly, polarity reversal of duplexed LC connectors creates a risk of tangling or twisting the optical fibers when the ferrules are swapped, potentially damaging the fibers. Also, in some cases, users cannot easily identify the current polarity configuration for a given patch cable without unplugging and disassembling the connector. Moreover, the small form factor, coupled with the relatively large number of interconnected components that often make up these duplexed LC connectors, gives rise to a perception that these connectors lack sufficient rigidity and durability to withstand repeated connection to, and disconnection from, patch panels or other devices.

The above-described deficiencies of current LC connectors are merely intended to provide an overview of some of the problems of current technology, and are not intended to be exhaustive. Other problems with the state of the art, and corresponding benefits of some of the various non-limiting embodiments described herein, may become further apparent upon review of the following detailed description.

SUMMARY

The following presents a simplified summary of the disclosed subject matter in order to provide a basic understanding of some aspects of the various embodiments. This summary is not an extensive overview of the various embodiments. It is intended neither to identify key or critical elements of the various embodiments nor to delineate the scope of the various embodiments. Its sole purpose is to present some concepts of the disclosure in a streamlined form as a prelude to the more detailed description that is presented later.

Various embodiments described herein relate to an improved fiber optic connector design that provides a number of advantages over current LC connector designs. Embodiments of the fiber optic connector described herein incorporate features that facilitate easy access to selected fiber cable connectors within high density environments, while maintaining a form factor having a low profile conducive to such high density applications. The fiber optic connector assemblies described herein employ a relatively small number of component parts, yielding a rigid and reliable construction while lowering manufacturing costs relative to connector designs requiring a larger number of components. Unique barrel features used in both duplex and paired simplex versions of the connector assembly facilitate fast and easy polarity reversal with little or no risk of twisting or damaging optical fibers in the process. A long-tail puller component can also be added to the connector assembly to provide ready access to the connector within congested installations. The connector maintains a low profile that reduces the risk of catching on adjacent cables or enclosure edges when pulled through congested fiber paths.

To the accomplishment of the foregoing and related ends, the disclosed subject matter, then, comprises one or more of the features hereinafter more fully described. The following description and the annexed drawings set forth in detail certain illustrative aspects of the subject matter. However, these aspects are indicative of but a few of the various ways in which the principles of the subject matter can be employed. Other aspects, advantages, and novel features of the disclosed subject matter will become apparent, from the following detailed description when considered in conjunction with the drawings. It will also be appreciated that the detailed description may include additional or alternative embodiments beyond those described in this summary.

BRIEF DESCRIPTION OF DRAWINGS

FIG. **1** is an orthographic view of the components of an example duplex fiber optic connector with unibody housing.

FIG. **2** is a detailed view of a unibody housing.

FIG. **3** is an orthographic front view of an example unibody housing with ferrule assemblies installed in respective barrel projections.

FIG. **4** is a detailed rear view of a unibody housing of a fiber optic connector.

FIG. **5** is an orthographic view of an example front body of a fiber optic connector.

FIG. **6**A is a side view and a front of a front body of a fiber optic connector housing having a substantially square profile.

FIG. **6**B is a side view and a front view of an example front housing of a fiber optic connector having a chamfered front face.

FIG. **6**C is a side view, a front view, and an orthogonal view of an example front body of a fiber optic connector having chamfered or rounded corners on its front face.

FIG. **7** is an orthogonal view of an example puller for a duplex fiber optic connector.

FIG. **8**A is an orthogonal view of an assembled fiber optic connector with unibody housing including a puller.

FIG. **8**B is a top view of an assembled fiber optic connector with unibody housing including a puller.

FIG. **9**A is a front view of an assembled fiber optic connector with unibody housing.

FIG. **9**B is a front view of an assembled fiber optic connector with unibody housing depicting rotation of the front bodies.

FIG. **10** is an orthographic view of the components of an example paired simplex fiber optic connector with duplex clip.

FIG. **11** is an orthographic view of a rear body of a paired simplex fiber optic connector.

FIG. **12** is an orthogonal view of an example duplex clip for a paired simplex fiber optic connector.

FIG. **13** is a rear view of two rear bodies held together by duplex clip.

FIG. **14**A is a top view of an assembled paired simplex connector with a duplex clip.

FIG. **14**B is a top view of an assembled paired simplex connector including a puller with a duplex clip.

FIG. **15** is an orthographic view of a puller used for a paired simplex connector.

FIG. **16**A is an orthographic rear view of a paired simplex connector assembly with a duplex clip without a puller.

FIG. **16**B is an orthographic rear view of a paired simplex connector with a duplex clip including a puller.

FIG. **17** is a front view of a paired simplex connector with a duplex clip including a puller with the front bodies removed.

FIG. **18** is an orthographic view of a paired simplex connector with a duplex clip including a puller.

FIG. **19** is a side view of a paired simplex connector with a duplex clip including a puller.

FIG. **20**A is an orthographic view of a paired simplex connector with a duplex clip and puller illustrating a first step of a sequence for reversing the polarity of the connector.

FIG. **20**B is an orthographic view of a paired simplex connector with a duplex clip and a puller illustrating a second step of a sequence for reversing the polarity of the connector.

FIG. **20**C is an orthographic view of a paired simplex connector with a duplex clip and a puller illustrating a third step of a sequence for reversing the polarity of the connector.

FIG. **20**D is an orthographic view of a paired simplex connector with a duplex clip and a puller illustrating a fourth step of a sequence for reversing the polarity of the connector.

FIG. **20**E is an orthographic view of a paired simplex connector with a duplex clip and a puller illustrating a fifth step of a sequence for reversing the polarity of the connector.

FIG. **20**F is an orthographic view of a paired simplex connector with a duplex clip and a puller illustrating a sixth step of a sequence for reversing the polarity of the connector.

FIG. **21** is a side view of an example high density patching installation comprising a number of stacked adapters.

FIG. **22** is a side view of an example simplex fiber optic connector.

FIG. **23** is a flowchart of an example methodology for assembling a duplex fiber optic connector.

FIG. **24**A is a first part of a flowchart of an example methodology for assembling a paired simplex fiber optic connector assembly.

FIG. **24**B is a second part of a flowchart of an example methodology for assembling a paired simplex fiber optic connector assembly.

FIG. **25** is a flowchart of an example methodology for reversing the polarity of a duplex connector assembly or a paired simplex connector assembly.

FIG. **26**A is a top view of a fiber optic cable terminated on both ends by a first duplex connector and a second duplex connector.

FIG. **26**B is a top view of fiber optic cable terminated on both ends by a first duplex connector and a second duplex connector, in which the polarity has been reversed.

FIG. **27**A is a top view of an assembled duplex fiber optic connector when configured for straight-through "A-B" polarity.

FIG. **27**B is a top view of an assembled duplex fiber optic connector when configured for crossed "A-A" polarity.

FIG. **28**A is a diagram of a data connection configured for straight-through, or "A-B," polarity.

FIG. **28**B is a diagram of the data connection after a polarity reversal has been performed on the first duplex LC connector, resulting in a crossed, or "A-A" polarity.

FIG. **29** is a flowchart of an example methodology for marking a duplex connector for polarity identification.

DETAILED DESCRIPTION

The subject disclosure is now described with reference to the drawings wherein like reference numerals are used to refer to like elements throughout. In the following description, for purposes of explanation, numerous specific details are set forth in order to provide a thorough understanding of the subject disclosure. It may be evident, however, that the subject disclosure may be practiced without these specific details. In other instances, well-known structures and devices are shown in block diagram form in order to facilitate describing the subject disclosure.

As will be described in more detail below, certain features of the fiber optic connector design described herein can be embodied in a duplex type connector for use with duplex fiber optic cables (e.g., round duplex or other types of duplex cables) as well as in a paired simplex connector assembly that allows two simplex connectors to be clipped together to yield a sturdy duplex type connector. Both types of assemblies are described in detail below.

FIG. **1** is an orthographic view of the components of an example duplex LC connector assembly according to one or more embodiments of this disclosure. The components of the duplexed LC connector assembly are separated in FIG. **1** to provide a view of the individual components and their relationships to one another.

The duplexed LC connector assembly includes a unibody housing **116** having two hollow barrel projections **114** on its front side (note that only one barrel projection **114** is visible in FIG. **1**, since the second barrel projection is concealed by front body **102***b* installed thereon). FIG. **2** is a detailed view of the unibody housing **116**. The barrel projections **114** are hollow through their respective lengths, each providing a passage from the inner chamber of the unibody housing **116** to the outside of the connector. A step or groove **208** is formed around the base of each barrel projection **114**. In various embodiments, this groove may completely traverse

the circumference of the barrel projection **114**, or may traverse a portion of the circumference. These grooves **208** are used to affix front bodies **102** on the barrel projections **114** in a rotatable manner, as will be described in more detail below.

A coil spring **112** and corresponding ferrule assembly **106** is installed through the front opening of each barrel projection **114**, such that a rear tip of the ferrule assembly **106** resides within the coil of the spring **112**, thereby spring-loading the ferrule assembly **106**. To facilitate installation of the ferrule assembly, cuts **214** may be formed along the front portion of each barrel projection **114**, extending from the front opening of the barrel projection to a point along its length, to allow a degree of expansion while installing the ferrule assembly, FIG. **3** is an orthographic front view of an example embodiment of the unibody housing **116** with the ferrule assemblies **106** installed in the respective barrel projections **114**. In this example embodiment, the inner surface of the front opening of each barrel projection **114** comprises a number of flat surfaces arranged to form a hexagonal profile designed to mate with the hexagonal shape of the ferrule holder **306** of ferrule assembly **106**. Thus, when the ferrule assembly **106** is installed in the barrel projection **114**, the flat inner surfaces of the barrel opening and the corresponding surfaces of ferrule holder **306** prevent the ferrule assembly **106** (and the optical fibers connected thereto) from twisting inside the unibody housing **116**. Although the profile of the barrel projection's inner surface is depicted as being hexagonal in FIG. **3**, it is to be appreciated that any suitable geometric shape can be used as the basis for the front opening of the barrel projections **114** without departing from the scope of one or more embodiments of this disclosure

The unibody housing **116** also includes a crimp core **122** on its rear side that provides a rear opening into the unibody housing **116**, as can be seen more clearly in FIG. **4**, which is a detailed rear view of the unibody housing **116**. Two optical fibers of a duplex fiber cable can enter the inner chamber of the unibody housing **116** through this rear opening. As can be seen in FIG. **2**, two fiber passages **204***a* and **204***b* are formed in the inner chamber of unibody housing **116**, each of the two fiber passages **204***a* and **204***b* leading from the rear opening (crimp core **122**) to one of the barrel projections. The two optical fibers that enter the unibody housing **116** via crimp core **122** are routed through these two fiber passages **204** one fiber per passage—one fiber per passage—and connected to the rear ferrule connector of ferrule assembly **106**, thereby providing a signal connection between the ferrules and their corresponding optical fibers.

To provide manufacturers with direct access to the rear ends of ferrule assemblies **106** for injection of adhesive to connect the optical cables to the ferrule assemblies, some embodiments of unibody housing **116** can include two adhesive needle channels **118***a* and **118***b* located on the rear side of the unibody housing opposite the two barrel projections **114**, as can be seen in FIGS. **2** and **4**. These adhesive needle channels **118** serve as passage ways through which a manufacturer can insert an adhesive injection needle during fabrication of the connector in order to inject epoxy or other adhesive material on the joint between the fiber optic cable and the ferrule assembly **106**. After these internal linkages have been made, lid **120**—which is attached to the main unibody housing via strap **202** at this stage—can be affixed to the top of the unibody housing **116**, thereby enclosing the fiber optic cables and rear ends of the ferrule assemblies **106** within the unibody housing. When the lid **120** is installed on the unibody housing **116**, projections **206** on the inside surface of lid **120** are inserted into the adhesive needle channels **118**, thereby closing the channels **118** and preventing debris from entering the unibody housing **116**. Once this assembly is complete, the strap **202** can be removed by the manufacturer prior to distribution of the duplexed LC connector assembly.

Any suitable mechanism can be used to connect an incoming duplex fiber optic cable to crimp core **122**. For example, FIG. **1** depicts an assembly comprising a crimp sleeve **124** and heat shrink tubing **126**, which can act as a sheath for the incoming cable. The assembly can also include a tapered boot **128** that can be slid over heat shrink tubing **126** and the crimp sleeve **124** for additional protection.

After the spring **112** and ferrule assembly **106** have been installed in each barrel projection **114**, the front bodies **102***a* and **102***b* are installed over the respective barrel projections **114** (note that FIG. **1** depicts front body **102***b* as being installed over its corresponding barrel projection, while front body **102***a* has been removed from its corresponding barrel projection **114** to provide a view of the component parts). Each front body **102** is hollow and comprises a front opening that is oriented such that, when the front body is fully installed on barrel projection **114**, the forward spring force applied by the spring **112** causes the ferrule of ferrule assembly **106** to project through the front opening of the front body **102**, while the remainder of the ferrule assembly **106** and the spring **112** are housed within the chamber formed by the front body **102** and the barrel projection **114**. The ferrule assembly **106** is spring-loaded against the front body **102**, such that the front body keeps the ferrule and spring contained within the hollow portion of the barrel projection **114** while the front body is mounted over the barrel projection.

FIG. **5** is an orthographic view of an example front body **102**. Front body **102** mounts over a barrel projection **114** by sliding the rear of the front body **102** over the front of the barrel projection **114** such that the front of the barrel projection enters the rear opening **508** of front body **102**. Cuts **504** are formed on the front body **102**, traversing from the rear edge of the front body to a point along the length of the front body. These cuts **504** allow a degree of expandability when installing the front body **102** over the barrel projection **114**. The example illustrated in FIG. **5** depicts only two cuts **504** on opposite left and right sides of the body, thereby splitting the rear opening **508** into two sections. However, some embodiments may also include only one cut, or may include third and fourth cuts **504** on the top and bottom sides of the front body **102**, thereby yielding a design having more than two sections or fewer than two sections.

The inner rim of each section of rear opening **508** comprises a raised ridge **502** designed to reside in groove **208** of the barrel projection **114**. Thus, when the front body **102** is fully installed on the barrel projection **114**, the raised ridges **502** latch into groove **208** of the barrel projection **114**, holding the front body **102** in place on the unibody housing **116**. As will be described in more detail below, the interaction of these raised ridges **502** with groove **208** also facilitates rotation of the front body **102** about the barrel projection **114**.

Front body **102** also includes an elastic latch **506** on its top surface that serves to latch the connector within an adapter when plugged into a patch panel or other device. When the connector is mated with an adapter, the upward spring force of the cantilevered latch **506** causes latching surfaces **510** on

the latch to remain engaged with corresponding latching features on the adapter. Applying a downward pressure on the latch **506** causes the latching surfaces **510** to disengage from the latching features of the adapter, thereby allowing the connector to be removed. Latch **506** also includes two recessed areas **512** within which the t-bar of long-tail puller **108** (see FIG. **1**) resides when the puller **108** is added to the duplexed LC connector assembly, as will be described in more detail below.

The design of the unibody housing **116** and front body **102** offers a number of advantages over conventional LC connector designs. For one, inclusion of the barrel projections **114** as formations on the unibody housing **116** over which the front bodies **102** are installed yields a connector design requiring fewer parts than are typically used for duplexed LC connector assemblies. For example, many LC connector designs require two front bodies that connect to respective rear bodies, which in turn are connected to a uniboot housing. By contrast, the unibody housing and front body designs described above eliminate the need for a rear body component, thereby lowering manufacturing costs by reducing part count. Moreover, eliminating the connective interface between the rear body and the uniboot housing found in conventional LC connectors can result in a more rigid connector structure, since imprecise connections between components often result in looseness or excessive wiggle between these components, which may adversely affect signal transmission. By mounting the front bodies over rigid barrel projections formed on the unibody housing described above, embodiments of the present design eliminate this looseness and yield a sturdier assembly for improved signal transmission. Also, as will be described in more detail below, the interaction of the front body **102** and the barrel projection **114** allows the front body to rotate about the barrel projection **114** independently of the ferrule assembly (that is, without causing a corresponding rotation of the ferrule assembly), which allows the polarity of the duplexed LC connector assembly to be easily reversed in the field with little or no risk of twisting or damaging the optical fibers inside the unibody housing **116**, and without the need to open the connector housing. Since this polarity reversal feature is implemented in a connector design having a compact form factor, a puller **108** can also be mounted to the connector without expanding the duplexed LC connector assembly's size profile to a degree that interferes with adjacent connectors in high density connector installations.

One or more embodiments of the front body **102** can include a number of other features that improve user experience. For example, the front edges of front body **102** can be chamfered to promote ease of insertion into a data port. For comparison, FIG. **6**A depicts a side view and a front view of a front body **604** having a substantially square profile. FIG. **6**B depicts a side and front view of an example front body **102** having a chamfered front face according to one or more embodiments of the present disclosure. As can be seen, the four edges of the front face are chamfered, resulting in angled surfaces **602** around the front opening of front body **102**, in contrast to the squared edges of front body **604**. This design affords the user a greater degree of alignment tolerance when inserting the connector into a square fiber optic adapter port, since the angled surfaces **602** allow room for error when aligning the front of the connector with the entrance of the adapter. This feature can be particularly useful when the user is attempting to plug the connector into a fiber optic adapter located outside the user's field of view e.g., an adapter located in the rear of a panel facing a wall, or that is obscured by other equipment), requiring the user to align the connector with the adapter purely by touch and with no visual guidance.

FIG. **6**C depicts side, front, and orthogonal views of another example front body **606** having chamfered or rounded corners **608** on its front face. These chamfered corners **608** serve a similar function to the angled surfaces **602** of front body **102** using an alternative design that produces a more rounded front face.

As noted above, a long-tail puller **108** (see FIG. **1**) can be mounted to the connector assembly. FIG. **7** is an orthogonal view of an example puller **108** according to one or more embodiments. Puller **108** includes a sleeve **110** and a t-bar **704** connected together by an arm. Sleeve **110** has a cut along its bottom so that the sleeve can be slipped over the fiber optic cable and moved forward onto boot **128** and into position on the duplexed LC connector assembly. A protrusion **702** located below t-bar **704** is designed to insert into a corresponding recess **212** in unibody housing **116** (see FIG. **2**). FIG. **8**A is an orthogonal view of the assembled duplex fiber optic connector with unibody housing **116**, including puller **108**. Applying a pull force on the sleeve **110** of puller **108** can cause a least a portion of the pull force to be translated to the t-bar **704** residing in recessed areas **512** of the front body latches **506** (see FIG. **5**), causing a substantially equal distribution of pull force between the two front bodies **102***a*, **102***b* and assisting in removal of the front bodies **102***a*, **102***b* from their corresponding ports in a duplex adapter. In this way, puller **108** can improve physical access to the duplexed LC connector assembly in high density installations to facilitate insertion and removal of the assembly from the adapter. The compact form factor of the puller **108** also prevents it from physically interfering with adjacent connectors in such environments. Moreover, the rear end sleeve **110** portion of the puller **108** includes no sharp features that could catch on cables or wires as the duplexed LC connector is being pulled through a congested environment.

FIG. **8**B is a top view of the assembled duplex fiber optic connector. Note that the left and right sides of t-bar **704** reside within the recessed areas **512** formed in latches **506** of the front bodies **102** (see FIG. **5**), ensuring that a pulling force applied to the puller **108** is distributed substantially equally to each side of t-bar **704** and thus equally to the two latches **506** of the duplexed LC connectors. Also, as can be seen in the view of FIG. **8**B, one or more embodiments of the unibody housing **116** can be marked with identification markings **802** that distinguish between the top side and bottom side of the unibody housing **116**, allowing users to easily identify whether the polarity of the optical fibers with the duplex patch cable terminated to the duplexed LC connectors has been reversed. This is described in more detail below in connection with the polarity reversal technique made possible by embodiments of the subject connector design.

FIG. **9**A is a front view of the assembled duplex fiber optic connector. As can be seen more clearly in this view, protrusion **702** of puller **108** resides in a corresponding recess of the unibody housing **116** between the two fiber passages **204**. As noted above, the physical relationships between the front bodies **102**, the barrel projections **114** of unibody housing **116**, and the ferrule assemblies **106** allow the front bodies **102***a*, **102***b* to be rotated about the unibody housing **116** independently of the ferrule assemblies **106**, as illustrated in the front view of FIG. **9**B. Which depicts front bodies **102***a*, **102***b* semi-transparently. In FIG. **9**B, front body **102***a* is depicted as having been rotated 180 degrees,

while front body **102***b* is in the process of being rotated. As the front body **102** is rotated about the barrel projection **114**, the raised ridges **502** along the inside rim of the front body's rear opening **508** (see FIG. **5**) remain seated within the groove **208** at the base of the barrel projection **114** (see FIG. **2**), holding the front body **102** on the barrel projection **114** while allowing the front body to rotate freely about the barrel projection. Since the barrel projection **114** physically separates the front body **102** and the ferrule holder **306** (see FIG. **3**), this rotation is carried out without a corresponding rotation of the ferrule assembly **106** (which is further prevented from rotating by the hexagonal shape of the inner chamber of barrel projection **114**, as described above in connection with FIG. **3**). This design facilitates a simple process for reversing the polarity of a fiber optic patch cable associated with the duplexed LC connectors, as will be described in more detail below.

The assembly depicted in FIG. **1** and described above yields a duplexed fiber optic connector assembly suitable for duplex fiber optic cables—e.g., round duplex or other duplex cable types—wherein two optical fibers are enclosed in a common cable that enters the crimp core **122** on the rear side of the unibody housing **116**, and wherein the two optical fibers are separatedly routed inside the unibody housing **116** within separate fiber passages **204***a* and **204***b*.

Many of the features described above can also be embodied in single LC connectors duplexed by means of a clip, each of which is terminated to a simplex fiber optic cable—each carrying a single optical fiber—to form a simplex LC connector assembly. FIG. **10** is an orthographic view of the components of an example paired simplex fiber optic connectors according to one or more embodiments of this disclosure. These paired simplex embodiments incorporate several of the same components used in the duplexed unibody housing version described above.

For example, the front bodies **102**, ferrule assembly **106**, and spring **112** are similar to the corresponding components of the duplexed unibody housing assembly. In this paired simplex version, however, the unibody housing **116** is replaced with two rear bodies **1002***a* and **1002***b*, corresponding to the respective front bodies **102***a* and **102***b*. In FIG. **10**, rear body **1002***b* is depicted as being connected to its corresponding front body **102***b*, while rear body **1002***a* is depicted as being separated from its corresponding front body **102***a* to provide a view of the ferrule assembly **106** and spring **112** that reside inside the front body/rear body assembly.

FIG. **11** is an orthographic view of a rear body **1002**. Similar to the unibody housing **116** of the duplex connector, the rear body **1002** used in the paired simplex connector comprises a barrel projection **1102** having a similar construction to that used in the unibody housing **116** of the duplex design. That is, barrel projection **1102** is hollow throughout its length and includes a front opening **1104** having a hexagonal profile designed to mate with the hexagonal shape of the ferrule holder of ferrule assembly **106** (although other geometric profiles for the front opening **1104** are also within the scope of one or more embodiments of this disclosure). Barrel projection **1102** also includes two or more cuts **1114** that extend from the front opening **1104** to a point part way down the length of the barrel projection. A step or groove **1112** is formed at the base of barrel projection **1102**, and either fully or partially traverses the circumference off the barrel projection **1102**. The groove **1112** is configured to receive the raised ridges **502** along rim of the rear opening **508** of front body **102** (see FIG. **5**).

A crimp core **1110** is located on the rear side of rear body **1002** and, as shown in FIG. **10**, is designed to mate with a crimp sleeve **1014** that, together with heat shrink tubing **1010** and hoot **1012**, connect a simplex optical cable to the rear body **1002**. Although FIG. **10** depicts crimp sleeve **1014**, heat shrink tubing **1010**, and boot **1012** as the means for affixing an optical cable to the rear body **1002**, it is to be appreciated that other means for attaching the cable to the rear body **1002** are within the scope of one or more embodiments of this disclosure.

Spring **112** and ferrule assembly **106** are inserted into the barrel projection **1102** of rear body **1002** via front opening **1104**. The optical fiber of a simplex cable attached to the crimp core **1110** enters the rear body **1002** and is attached to the rear connection point of ferrule assembly **106**, thereby establishing a communicative connection between the optical fiber and the ferrule assembly. With the ferrule assembly **106** and spring **112** installed in the rear body **1002**, front body **102** is slid over the barrel projection **1102** of rear body **1002** in a manner similar to installation of the front body **102** over barrel projection **114** of the unibody housing **116**. The raised ridges **502** along the rim of the front body's rear opening **508** latch (see FIG. **5**) into the groove **1112** at the base of barrel projection **1102**. This latching of the ridges **502** in the groove **1112** serves both to hold the front body **102** in place on the rear body **1002**, and to allow the front body to be rotated about the rear body when it is desired to reverse the polarity of the connector, as will be described in more detail below. When the front body **102** is fully installed on the barrel projection **1102**, the front portion of the ferrule protrudes through the front opening of the front body **102**, while the rest of the ferrule assembly **106** and the spring **112** are housed within the chamber formed by the barrel projection **1102** and the front body **102**.

The resulting assembly—comprising a front body **102**, a rear body **1002**, ferrule assembly **106**, and spring **112**—yields a simplex LC connector suitable for single conductor connections. In order to pair two simplex cables in a common duplexed connector assembly that can be plugged into a duplex fiber optic adapter (e.g., for patching applications in which two simplex cables act as a send/receive pair comprising a fiber optic circuit), duplex clip **1008** (see FIG. **10**) can be used to join two rear bodies **1002** together in a rigid duplex arrangement, and two front bodies **102** can be mounted on the respective two rear bodies **1002**. FIG. **12** is an orthogonal view of an example duplex clip **1008** according to one or more embodiments. Duplex clip **1008** comprises an elongated plate **1208**, with each of the left and right sides of the plate **1208** having a pair of opposing rails **1202** located along the top and bottom edges of the plate **1208**. The rails **1202** begin at the front edge of the plate **1208** and extend part way along the top and bottom edges toward the rear edge of the plate **1208**. The two rails on a given side of the plate **1208** are spaced away from the plate and oriented such that the two rails face each other. That is, the rails along the top edge face downward, while the rails along the bottom face upward.

The spacing of the rails **1202** from the plate **1208** is set to correspond to a thickness of two side plates **1106** located on the left and right sides of the rear body **1002**. These side plates **1106** can be seen in FIG. **11**. As shown in FIG. **11**, grooves **1108** are defined behind the top and bottom edges of the side plates **1106**. The rails **1202** of duplex clip **1008** are designed to slide into these grooves **1108** from the rear side of rear body **1002**. When installed in this manner, the side plates **1106** of rear body **1002** reside within the spaces **1204** defined by the top and bottom rails **1202** of duplex clip

1008. FIG. **13** is a rear view of two rear bodies **1002** being held together by duplex clip **1008**. As can be seen in FIG. **13**, rails **1202** of duplex clip **1008** reside in the grooves **1108** behind the top and bottom edges of the side plates **1106** of the rear bodies **1002**, effectively holding the two rear bodies **1002** firmly in place by clasping their inner surfaces.

FIG. **14**A is a top view of the assembled pair of simplex LC connectors, comprising the duplex clip **1008**, rear bodies **1002***a* and **1002***b* held together by the duplex clip **1008**, and front bodies **102***a* and **102***b* mounted to the barrel projections of the rear bodies **1002**. The ferrule assemblies **106** and springs (not shown) reside within the chamber formed by the front and rear bodies, with the front tips of the ferrules protruding through the front openings of the front bodies **102**. Duplex clip **1008** is designed to hold the two simplex LC connector assemblies such that the spacing between the two simplex LC connectors conforms to a standard duplex spacing, allowing the paired simplex LC connector assemblies to be plugged into a duplex adapter. The lengths of the duplex clip's rails **1202** and the corresponding area of the rear bodies' side plates **1106**—which are held by the rails **1202**—are sufficient to rigidly hold the two simplex LC connector assemblies substantially in parallel. The relatively large area of contact between the duplex clip **1008** and the rear bodies' side plates **1106** prevents the two simplex LC connector assemblies from bending toward or away from each other to an excessive degree, thereby reliably maintaining this parallel arrangement. By providing a sturdy and consistent parallel orientation of the paired simplex LC connectors, this design improves user experience by ensuring that the paired simplex LC connector assembly reliably aligns with a mating duplex adapter and maintains the parallel configuration between the duplexed fiber optic signal paths.

As with the duplexed LC connector assembly having unibody housing **116**, a puller can be added to the paired simplex LC connector assembly to improve physical access to the paired simplex LC connector assemblies to facilitate insertion into, and removal from, the corresponding duplex adapter in high density connectivity environments. FIG. **14**B is another top view of the paired simplex LC connector assembly that adds a puller **1004**. Puller **1004** includes a t-bar **1402** connected to a cable anchor **1006** by an arm, FIG. **15** is an orthographic view of the puller **1004** used for the paired simplex LC connector assembly according to one or more embodiments. While having a broadly similar form factor to the puller **108** used in the duplex LC connector assembly with unibody housing **116** described above, a number of design aspects of puller **1004** are adapted for use with the paired simplex LC connector assembly with duplex clip **1008**. For example, the cable anchor **1006** comprises two concave surfaces **1007***a* and **1007***b* adapted to accommodate the two parallel simplex cables that enter each of the paired simplex LC connectors, respectively, as can be seen in FIGS. **16**A and **16**B. FIG. **16**A is an orthographic rear view of the paired simplex connector assembly with the puller **1004** omitted. As described above, duplex clip **1008** holds two rear bodies **1002** in a parallel orientation, and two front bodies **102** are attached to the barrel projections **1102** of rear bodies **1002**, enclosing the ferrule assemblies **106** and springs **112** within the resulting assemblies (see FIG. **10**). As shown in FIGS. **14**A, **14**B, **16**A, and **16**B, two simplex optical cables **1602** are attached to crimp cores **1110** on the rear sides of the rear bodies **1002** using crimp sleeves **1014**, and boots **1012** are slid over the crimp sleeves **1014**. The optical fibers of the respective optical cables **1602** enter the rear bodies **1002** via crimp cores **1110** and attach to the ferrule assemblies within the front bodies **102***a*, **102***b* and rear bodies **1002***a*, **1002***b*.

FIG. **16**B is an orthographic rear view of the paired simplex LC connector assembly with puller **1004** attached. The cable anchor **1006** of the puller resides between the two simplex fiber optic cables (e.g., between the two boots **1012**), with the concave surfaces **1007***a*, **1007***b* of the cable anchor **1006** accommodating the two simplex fiber optic cables.

Returning now to FIG. **15**, protrusions **1502***a*, **1502***b*, **1504** below the puller's t-bar **1402** are designed to interlock with corresponding grooves formed by puller rails **1210** on the top of duplex clip **1008** (see FIG. **12**). FIG. **17** is a front view of the paired simplex LC connector assembly including puller **1004**, with the front bodies **102***a*, **102***b* removed for clarity. As can be seen in FIG. **17**, puller **1004** includes three protrusions **1502***a*, **1502***b*, **1504** below t-bar **1402** that reside within corresponding grooves **1214***a*, **1214***b*, **1212** formed by the two puller rails **1210** of the duplex clip **1008**. In this illustrated embodiment, the grooves **1214***a*, **1214***b*, **1212** defined by the two puller rails **1210** include a square groove **1212** between the two rails **1210**, a first notched groove **1214***a* on the left side of the left-hand puller rail **1210**, and a second notched groove **1214***b* on the right side of the right-hand puller rail **1210**. To affix the puller **1004** on the duplex clip **1008**, the left and right notched grooves **1214***a*, **1214***b* on the clip **1008** are configured to receive corresponding V-shaped rails on the left and right protrusions **1502***a*, **115***b* of the puller **1004**. This design allows the puller **1004** to be mounted on the duplex clip **1008** by aligning the rails of the left and right protrusions **1502***a*, **1502***b* with the corresponding notched grooves **1214***a*, **1214***b* of the clip **1008**, and sliding the t-bar **1402** of the puller **1004** over the duplex clip **1008**, either from the front or rear of the duplex clip **1008**. In the embodiment illustrated in FIG. **17**, puller **1004** also includes a middle protrusion **1504** that resides in the square groove **1212** between the two puller rails **1210** of the clip **1008**. This middle protrusion **1504** presents a stop for the puller **1004** operating within the square groove **1212** between the two puller rails **1210** of clip **1008**. This middle protrusion stop prevents the puller **1004** from separating from the duplexed LC connector assembly when pulled rearward, and also prevents the t-bar **1402** of puller **1004** from slipping rearward, and out of engagement with, recessed areas **512** disposed in latches **506** of front bodies **102***a*, **102***b* (see FIGS. **5** and **10**).

Note that similar puller rails **1210** are also located on the bottom of duplex clip **1008**, yielding a symmetrical profile. Mirroring the puller rails **1210** on both the top and bottom of the clip **1008** assists in the polarity reversal technique to be described in more detail below in connection with FIGS. **20**A-**20**F.

FIG. **18** is an orthographic view of the paired simplex LC connector assembly including the puller **1004**. With the puller **1004** in place, the t-bar **1402** provides an easily accessible means for removing the paired simplex LC connector assembly from a duplex adapter. Note that the left and right sides of t-bar **1402** reside within the recessed areas **512** formed in latches **506** of the front bodies **102***a*, **102***b* (see FIGS. **5** and **10**), ensuring that a pulling force applied both sides of t-bar **1402** is distributed substantially equally to the two simplex LC connectors of the paired LC connector assembly.

FIG. **19** is a side view of the paired simplex LC connector assembly including the puller **1004**. Note that the puller **1004** is designed such that the addition of the puller **1004** to

the paired LC connector assembly does not introduce additional height to the paired LC connector assembly's vertical profile. That is, the top surface of the puller **1004** does not extend upward past the top surface of the latches **506** of front bodies **102***a*, **102***b*. This ensures that the puller **1004** not interfere with adjacent connectors or cables in high density connectivity installations.

The designs of both the duplex and the paired simplex connectors described above allow the polarity of the fiber optic circuitry of the connectors and cabling to be reversed easily in the field with little or no risk of twisting or tangling the optical fibers comprising the circuit, even when a puller (e.g., puller **108** or puller **1004**) is included as part of the connector assembly. FIGS. **20**A-**20**F are orthographic views of the paired simplex LC connector assembly illustrating a sequence for reversing the polarity of the fiber optic circuitry. Although FIGS. **20**A-**20**F illustrate polarity reversal for the circuitry of a paired simplex LC connector assembly with duplex clip **1008**, it is to be appreciated that a similar operation can be used to reverse the polarity for the duplex LC connector assembly with the unibody housing **116** described above.

FIG. **20**A is an orthographic rear view of the paired simplex LC connector assembly, which is used to connect two simplex fiber optic cables **2002***a* and **2002***b* to a duplex adapter. In the current default polarity, cable **2002***a* is connected to the left side of the paired simplex LC connector assembly while cable **2002***b* is connected to the right side. Thus, when the paired simplex LC connector assembly is plugged into a duplex adapter (not shown in the figures), cable **2002***a* will be plugged into the left port of the duplex adapter while cable **2002***b* will be plugged into the right port of the duplex adapter.

To reverse the polarity of the paired simplex LC connectors, and corresponding cables **2002***a*, **2006**, comprising the assembly, the following steps can be carried out. As shown in FIG. **20**B, the front bodies **102***a*, **102***b* are rotated 180 degrees about the barrel projections **114** of rear bodies **1002***a*, **1002***b* (or unibody housing **116**). As described above in connection with FIGS. **9**A and **9**B, since the front bodies **102***a*, **102***b* are mounted in a rotatable manner on the barrel projections **114**, and the ferrule assemblies **106** are installed inside the barrel projections **114** in a fixed manner, the front bodies **102***a*, **102***b* can be rotated without causing a corresponding rotation of the ferrule assemblies **106**, thereby preventing twisting of the ferrule assemblies **106** and the optical fibers disposed therein. At the completion of this step in the polarity reversal process, the paired simplex LC connectors of the assemblies are is in an upside-down orientation vis-à-vis the duplex clip **1008** (or unibody housing **116**) compared to the starting position.

Next, as shown in FIG. **20**C, the puller **1004** is removed from the paired simplex LC connector assembly. In the case of the paired simplex assembly with duplex clip **1008**, this can be achieved by sliding the puller **1004** forward, away from cables **2002***a*, **2002***b*, so that the t-bar **1402** of puller **104** can be disengaged from the recessed areas **512** in the latches **506** of front bodies **102***a*, **102***b*, and thereby disconnecting the protrusions **1502***a*, **1502***b*, **1504** of puller **1004** from the puller rails **1210** on top of the duplex clip **1008**. The puller **1004** can then be pulled backward toward the cables **2002***a*, **2002***b* to facilitate removal of the puller **1004** from the paired simplex LC connector assembly. Since the cable anchor **1006** of puller **1004** is held between the two cables **2002***a*, **2002***b*, the risk of the puller **1004** falling from the paired simplex LC connector assembly during this step in the polarity reversal process is minimized. The puller **1004** is then moved to the opposite side of the paired simplex LC connector assembly, as shown in FIG. **20**D. At this stage, the puller **1004** is not yet reattached to the duplex clip **1008**. The entire paired simplex LC connector assembly is then rotated, as shown in FIG. **20**E. Note that this rotation causes cables **2002***a* and **2002***b* to be reversed in position vis-à-vis the duplex clip **1008** (or unibody housing **116**), while also causing the paired simplex LC connector assembly to be reoriented in the right-side-up position. Finally, the puller **1004** is reattached to the duplex clip **1008** by aligning the protrusions **1502***a*, **1502***b*, **1504** of puller **1004** with the puller rails **1210** on the duplex clip **1008** and sliding the puller **1004** backward, causing the front of the puller **1004** to engage with the clip **1008**. Note that the puller rails **1210** on the duplex clip **1008** to which the puller **1004** is attached during this step are those that were located on the bottom of the clip in FIG. **20**A, but which are now in the top position due to the rotation during polarity reversal shown in FIG. **20**E. Since the same puller rails **1210** are located on both the top and bottom of the duplex clip **1008**, the polarity reversal can be achieved without disconnecting the clip **1008** from the rear bodies **1002**.

In the embodiment using the unibody housing **116**, attachment of the puller **108** to the duplexed LC connector assembly is achieved by inserting protrusion **702** of puller **108** (see FIG. **7**) into a corresponding recess **212** in the unibody housing **116** (see FIGS. **2**, **9**A, **9**B), where this recess **212** is accessible on both the top and bottom sides of the unibody housing **116**.

As shown in FIG. **20**F, cables **2002***a* and **2002***b* have reversed position relative to the position of cables **2002***a* and **2002***b* shown in FIG. **20**A, such that cable **2002***b* will be plugged into the left port of a duplex adapter, and cable **2002***a* will be plugged into the right port. Reversal of the polarity of the cabling and paired simplex LC connectors, or duplexed LC connectors, of the assemblies with respect to the duplex clip **1008** or unibody housing **116**, respectively, is now complete.

In some embodiments, the LC connectors of the assemblies can include visual features that assist a user in identifying the current polarity configuration of the assembled connectors. For example, as shown in FIG. **8**B, the top surface of the unibody housing **116** of the duplexed connector can be marked with identifying characters that distinguish the top of the duplexed connector from the bottom of the duplexed connector. In the example depicted in FIG. **8**B, the top of the duplexed connector is embossed with a letter "B" on the left side, and a letter "A" on the right side. Seeing these letters embossed on top of the duplexed connector can indicate to the user that the duplexed connector is currently configured for its default, or as-built, polarity. The reverse side of unibody housing **116** may be embossed with a different combination of characters e.g., the letter "A" on both the left and right sides—which become oriented on the top side of the duplexed connector when the polarity is reversed. Seeing this alternative pair of characters can indicate to the user that the duplexed connector has been reconfigured for polarity reversal. It is to be appreciated that other distinguishing characters or marks can be used on the top and bottom surfaces of the duplexed connector without departing from the scope of one or more embodiments of this disclosure.

The procedure outlined above in connection with FIGS. **20**A-**20**F allows a user to quickly and easily reverse the polarity of the duplexed connector in the field without twisting or damaging the optical fibers connected to the ferrules inside the connector housings, and without requiring

the user to disassemble the connector housing in order to access the ferrule assemblies housed therein. The design of the duplex and paired simplex connectors described herein allow this polarity reversal feature to be implemented even when a puller is included as part of the connector assembly, since the puller can be easily relocated to the appropriate side of the connector as needed.

As noted above, the relatively low vertical profile of the duplexed and paired simplex connectors described herein render these connectors suitable for use within high density connectivity installations. FIG. **21** is a side view of an example high density connectivity installation comprising a number of stacked adapters **2102**, each adapter comprising a row of duplexed data ports into which duplexed or paired simplex connectors **2104** can be inserted. As illustrated by the dashed boxes, the vertical profile of the connector design described herein is low enough to remain within the profile dimensions of the adapters **2102**. Their low vertical profile allows the connectors **2104** to be installed in high density connectivity applications without interference between adjacent connectors **2104**.

To further reduce the risk of the connector becoming entangled with cables within such high density connectivity environments, the latch **506** of the front body **102** can comprise a long arch that extends nearly to the body of the connector, as shown in FIG. **22**. As can be seen in FIG. **22**, the arch of the latch **506** extends such that the space **2202** between the end of the latch **506** and the connector housing is small, while the arch is flexible enough to allow a user to bend the latch **506** downward sufficiently to disengage the latch from a mated adapter. Keeping this space **2202** small reduces the risk of cables becoming snagged by the latch **506** as the connector is pulled through a high density connectivity environment.

The duplexed and paired simplex connectors described herein incorporate a number of design features that address a number of functional and perceptual issues that arise in fiber optic patching applications. For example, the relatively small number of parts required for the connector assemblies described herein can reduce manufacturing costs while providing a more rigid structure relative to connectors that incorporate a greater number of components. By enclosing the ferrule assemblies within grooved barrel structures **114** over which the front bodies **102** can be mounted, such that the front bodies can be rotated about the barrel projection **114** without rotating the ferrule assemblies **106**, the connectors described herein allow users to quickly and easily reverse the polarity of the connectors and cabling in the field (e.g., from crossed to straight-through, or vice versa) without twisting or entangling the optical fibers housed within the connectors, and without opening the connector housing. This polarity reversal feature is implemented in a connector design that also allows for installation of a puller (e.g., puller **108** or **1004**) that facilitates easy access to the connector in congested connectivity environments for ease of connector insertion and removal from corresponding duplex adapters. The chamfered front edges of the front bodies **102** of the connectors can improve the ease with which the connectors are inserted into a fiber adapter, particularly in low visibility, or close, areas where precise manual alignment between the connector and a corresponding adapter is not easily achieved.

FIGS. **23-25** illustrate various methodologies in accordance with one or more embodiments of the subject application. While, for purposes of simplicity of explanation, the one or more methodologies shown herein are described as a series of steps, it is to be understood and appreciated that the subject innovation is not limited by the order of steps, as some steps may, in accordance therewith, occur in a different order and/or concurrently with other steps from that shown and described herein. For example, those skilled in the art will understand and appreciate that a methodology could alternatively be represented as a series of interrelated states or events, such as in a state diagram. Moreover, not all illustrated steps may be required to implement a methodology in accordance with the innovation. Furthermore, interaction diagram(s) may represent methodologies, or methods, in accordance with the subject disclosure when disparate entities enact disparate portions of the methodologies. Further yet, two or more of the disclosed example methods can be implemented in combination with each other, to accomplish one or more features or advantages described herein.

FIG. **23** illustrates an example methodology **2300** for assembling a duplexed fiber optic connector according to one or more embodiments described herein. Initially at **2302**, a spring and a ferrule assembly are installed in a hollow barrel projection formed on a front side of a unibody housing, the barrel projection forming a passage into an inner chamber of the unibody housing and comprising a groove that traverses all or part of the circumference of the barrel projection.

At **2304**, a front body is installed over the barrel projection, causing the tip of the ferrule assembly to protrude through a front opening of the front body. The front body comprises at least one ridge along an inner rim or edge of the rear opening, and the at least one ridge resides in the groove of the barrel projection while the front body is installed over the barrel projection, such that the front body is rotatable about the barrel projection independently of the ferrule assembly

At **2306**, the ferrule assembly is connected to an optical fiber inside the inner chamber of the unibody housing, the optical fiber entering the inner chamber via an opening on the rear side of the unibody housing. Steps **2302-2306** can be repeated for a second barrel projection formed on the front side of the unibody housing, a second front body, a second ferrule assembly, and a second spring, thereby completing the duplexed assembly for two optical fibers of an incoming duplex fiber optic cable. At **2308**, a lid is closed or installed on the unibody housing, enclosing the connections made at **2306** within the housing. At **2308**, a puller is installed on the unibody housing, the puller having at least one protrusion that resides in a corresponding recess in the unibody housing.

FIGS. **24**A and **24**B are two parts of an example methodology **2400** for assembling paired simplex fiber optic connectors according to one or more embodiments described herein. Initially, at step **2402**, a first spring and a fist ferrule assembly are installed in a hollow barrel projection formed on a front side of a first rear body, the barrel projection comprising a groove that traverses all or part of a circumference of the barrel projection. At **2404**, a first front body is installed over the barrel projection, causing the front tip of the first ferrule assembly to protrude through a front opening of the first front body. The first front body comprises at least one ridge along an inner edge or rim of a rear opening, and the at least one ridge resides in the groove of the barrel projection while the first front body is installed over the barrel projection, such that the first front body is rotatable about the barrel projection independently of the first ferrule assembly.

At **2406**, the first ferrule assembly is connected to a first optical fiber inside the first rear body, the first optical fiber entering the first rear body via an opening on the rear side

of the first rear body. At **2408**, a first crimp sleeve is installed on a first crimp core located on the rear side of the first rear body. At **2410**, a second spring, a second ferrule assembly, a second front body, and a second crimp sleeve are installed on a second rear body, and a second optical fiber is connected to the second ferrule assembly inside the second rear body.

The methodology then proceeds to step **2412** of FIG. **24**B, where a left side of the first rear body is mounted to a right side of a clip such that top and bottom rails on the right side of the clip reside in corresponding grooves on the top left edge and bottom left edge of the first rear body. At **2414**, a right side of the second rear housing is mounted to a left side of the clip such that top and bottom rails on the left side of the clip reside in corresponding grooves on the top right edge and bottom right edge of the second rear body.

At **2416**, first and second boots are slid forward to rear walls of the first and second rear bodies, respectively. At **2418**, a puller is installed on the assembly that results from implementing steps **2402-2416**, the puller having at least one protrusion that resides in a corresponding groove of the clip.

FIG. **25** illustrates an example methodology **2500** for reversing the polarity of a duplexed connector or a paired simplex connector according to one or more embodiments of this disclosure. For a duplexed connector, the methodology begins at step **2502***a*, where a puller is removed from a top surface of the connector. At **2504***a*, a first front body of the duplexed connector is rotated approximately 180 degrees about a unibody housing of the duplexed connector. In one or more embodiments, the first front body may be mounted on one of two barrel projections of the unibody housing in a manner that allows the front body to be rotated about the barrel projection. At **2506***a*, a second front body of the duplex connector is also rotated approximately 180 degrees about the unibody housing.

For a paired simplex connector, the methodology begins at step **2502***b*, where a puller is removed from a top surface of the connector. At **2504***b*, a first front body of the paired simplex connector is rotated approximately 180 degrees about a first rear body of the paired simplex connector. At **2506***b*, a second front body of the paired simplex connector is also rotated approximately 180 degrees about a second rear body of the paired simplex connector. The first and second rear bodies may be connected in a parallel orientation using a duplex clip to form the paired simplex connector.

In either the duplexed connector scenario or the paired simplex connector scenario, after the two front bodies have been rotated, the methodology moves to step **2508**, where the connector is flipped such that the bottom surface of the connector now faces upward, and reversed vis-à-vis the duplexing unibody housing or pairing clip compared to the starting position. At **2510**, the puller is attached to the now upward-facing surface of the connector, and the polarity reversal is complete.

With conventional reversible duplex connectors, there is typically no way to readily visually identify whether a connected duplex connector has been reversed in polarity, or alternatively if the connector is configured for straight-through connectivity. FIG. **26**A is a top view of a fiber optic cable **2604** terminated on both ends by a first duplex connector **2602***a* and a second duplex connector **2602***b*. Properties of the first duplex connector **2602***a* and second duplex connector **2602***b* are now described with reference to the first duplex connector **2602***a*, although it is to be understood that the second duplex connector **2602***b* has a similar construction. Also, although the labeling convention described herein is depicted in FIGS. **26**A and **26**B as being implemented on duplex connectors **2602** having a similar construction to that of the duplex fiber optic connector with unibody housing **116** described above in connection with FIGS. **1-9**, it is to be appreciated that the labeling convention described herein can be implemented on substantially any type of duplex connector, as well as paired simplex fiber optic connectors such as that described above in connection with FIGS. **10-19**.

Fiber optic cable **2604** includes two optical fibers (not shown) housed within the cable's jacket. Fiber optic cable **2604** enters the rear side **2610** of duplex connector **2602***a*, and the two optical fibers are separate within the housing of the duplex connector **2602***a* and terminated on respective ferrules **2612***a* and **2612***b* within the duplex connector **2602***a*. The ferrules **2612***a* and **2612***b* are located within respective front bodies **2608***a* and **2608***b* of the duplex connector **2602***a*, such that the ferrules **2612***a* and **2612***b* protrude through the front sides of the front bodies **2608***a* and **2608***b*. Plugging the duplex connector **2602***a* into an adapter causes an optical connection to be made between each of the ferrules **2612***a* and **2612***b* and the corresponding ferrules of the duplex connector inserted into the opposing side of the adapter, thereby optically connecting the two optical fibers of cable **2604** to the corresponding optical fibers in the cable of the mated duplex connectors.

In the illustrated example, the top side of the housing of duplex connector **2602***a* is marked with labels "A" and "B," each label corresponding to one of the two front bodies **2608***a* and **2608***b*. These labels are used for reference when describing the polarity of the fiber optic connection, which is a function of how the front bodies **2602***a* and **2602***b* are connected to the optical fibers of fiber optic cable **2604**, or how the front bodies **2602***a* and **2602***b* are plugged into their corresponding adapters. For example, connection schematic **2606** illustrates the optical fiber connectivity between the front bodies **2608** of the connectors **2602***a* and **2602***b*. In the example illustrated in FIG. **26**A, front body "A" (**2608***a*) of duplex connector **2602***a* and front body "B" of duplex connector **2602***b* are connected to each other via one of one of the optical fibers of fiber optic cable **2604**. Likewise, front body "B" (**2608***b*) of duplex connector **2602***a* and front body "A" of duplex connector **2602***b* are connected together via the other optical fiber of fiber optic cable **2604**. This results in a straight-through connection between the duplex connectors **2602***a* and **2602***b*. This type of connection is referred to as "A-B" polarity, since the "A" front body of one duplex connector is communicatively connected to the "B" front body of the other duplex connector. In general, the front body labeled "A" is assumed to be a transmit connector, while the front body labeled "B" is assumed to be a receive connector. When configured for "A-B" polarity, the receive connector (labeled "A") of one of the duplex connectors **2602** is connected to the transmit connector (labeled "B") of the other duplex connector **2602**.

Some duplex connectors allow the "A-B" polarity to be reversed by reversing the positions of the two optical fibers within one of the duplex connectors **2602***a* or **2602***b*, or by inverting one of the duplex connectors **2602***a* or **2602***b* (as with the duplex connector assemblies described above in connection with FIGS. **1-9**). FIG. **26**B is a top view of fiber optic cable **2604** terminated on both ends by first duplex connector **2602***a* and second duplex connector **2602***b*, in which the polarity has been reversed relative to the depiction in FIG. **26**A. In this example, the optical fibers of fiber optic cable **2604** have been reversed in duplex connector **2602***a*,

such that the ferrule that previously resided in the "B" front body now resides in the "A" front body, and vice versa. This results in the crossed connectivity shown in connection schematic **2606**, referred to as an "A-A" polarity, since the "A" front body of one duplex connector **2602***a* is connected to the "A" front body of the other duplex connector **2602***b*. This "A-A" polarity may be appropriate in a number of scenarios, including communication applications that utilize only one-way communication, communication applications that use wave division multiplexing to place receive and transmit signals on the same optical fiber, or serial transmission applications that allow the receive and transmit signals to travel in the same direction.

As can be seen in FIGS. **26**A an **26**B, there is no easy way to visually identify which polarity the connectors **2602***a* and **2602***b* are wired for, since the "A" and "B" labels do not change between the two configurations. Some duplex connectors that achieve the crossed polarity illustrated in FIG. **26**B by inverting one of the duplex connectors **2602***a* or **2602***b* are able to maintain the "A" and "B" labels on the upward-facing side of the connector by placing the labels on a removable component of the connector that can be removed and relocated to the upward-facing side of the connector when inverted. However, this results in an identical labeling to that of the straight-through "A-B" polarity. Consequently, a user who is inspecting fiber optic connections on a patch panel or other connectivity environment cannot easily discern the polarity of the connection.

To address these and other issues, one or more embodiments described herein provide a duplex connector that is marked or embossed with labels that facilitate visual identification of the polarity of the connector. In one or more embodiments, one side of the duplex connector can be marked with "A" and "B" labels corresponding to the receive and transmit front bodies, respectively. On the opposite side of the duplex connector, the receive and transmit front bodies are both labeled with an "A." When the duplex connector is configured for "A-B" polarity, the side of the duplex connector marked or embossed with the "A" and "B" labels is arranged to face upward while the duplex connector is plugged into an adapter (e.g., an adapter of a patch panel or other device), rendering those labels visible. When the duplex connector is reconfigured for "A-A" polarity, the opposite side marked with the two "A" labels is oriented to face upward, rendering those labels visible. Thus, a user can readily identify whether the connector is configured for "A-B" polarity or "A-A" polarity.

These identification features are suitable for substantially any type of duplex connector (including fiber optic connectors coupled by means of a unibody housing or duplex clip, duplex connectors for copper data connections, or connectors for other types of data communication connections). Presently, the identification features are described herein in connection with the duplex fiber optic connector with unibody housing **116** described above in connection with FIGS. **1**-**9**.

FIG. **27**A is a top view of the assembled duplex fiber optic connector with unibody housing **116** when configured for straight-through "A-B" polarity. As can be seen, the upward-facing side of the unibody housing **116** is marked with identification markings **802***a* and **802***b*. FIG. **27**B is a top view of the assembled duplex fiber optic connector when configured for crossed "A-A" polarity. When configured for "A-A" polarity, the duplex fiber optic unibody housing **116** is inverted, such that the top side of the connector in FIG. **27**A becomes the bottoms side in FIG. **27**B, and the bottom side in FIG. **27**A becomes the top, or upward-facing, side in FIG. **27**B. As can be seen in FIG. **27**B, the reverse side of the unibody housing **116** is marked with identification markings **804***a* and **804***b*, which are different than the identification markings **802***a* and **802***b*. Identification markings **802***a*/**802***b* and **804***a*/**804***b* distinguish between the top side and bottom side of the unibody housing **116**, allowing users to easily identify the polarity of the duplex patch cable terminated to the duplex fiber optic connectors.

In one or more embodiments, the identification markings **802***a*/**802***b* and **804***a*/**804***b* are chosen to correspond to the accepted industry nomenclature used to describe duplex patch cord polarities. In particular, identification markings **802***a*/**802***b*, which are visible on the upward-facing side of the connector when configured for "A-B" polarity, comprise an "A" label and a "B" label. Identification markings **804***a*/**804***b*, which are visible on the upward-facing side of the connector when configured for "A-A" polarity comprise two "A" labels. Identification markings **802***a*/**802***b* can be embossed, stamped, printed, or otherwise marked on the unibody housing **116** or on individual connector housings for duplex connectors not disposed in a unibody housing **116**.

FIGS. **28**A and **28**B illustrate the simplified polarity identification facilitated by the marking system described herein. FIG. **28**A is a diagram of a data connection configured for straight-through, or "A-B," polarity. In this example, a fiber optic patch cable **2806** is terminated on a first end by a first duplex fiber optic connector **2804***a*, and on a second end by a second duplex fiber optic connector **2804***b*. First duplex fiber optic connector **2804***a* is plugged into a fiber optic adapter of a first device **2808***a*, which may be a fiber optic patch panel or another device. Similarly, second duplex fiber optic connector **2804***b* is plugged into a fiber optic adapter of a second device **2808***b* (e.g. another patch panel or another type of device). As illustrated by the connection diagram **2802**, fiber optic patch cable **2806** is configured for "A-B" polarity, such that the terminal **2** of first device **2808***a* is connected to terminal **1** of second device **2808***b*. In this scenario, a user inspecting the data connection at device **2808***a* would see that the identification markings **2810***a* visible on the upward-facing side of first duplexed. LC connector **2804***a* are "B" and "A," indicating a straight-through "A-B" polarity.

FIG. **28**B is a diagram of the data connection after a polarity reversal has been performed on the first duplex fiber optic connector **2804***a*, resulting in a crossed, or "A-A" polarity. When the polarity identification system is used for the particular example duplex fiber optic connectors described herein, the polarity of duplex fiber optic connector **2804***a* can be reversed using the technique described above in connection with FIGS. **20**A-**20**F (however, the polarity identification system described herein is suitable for any type of duplex connector Whose polarity can be reversed by inverting the connector). Since reversing the polarity involves inverting the first duplex fiber optic connector **2804***a*, the identification markings **2810***b*, which were previously on the downward-facing side of the first duplex fiber optic connector **2804***a*, are now on the upward-facing side. Rather than being labeled "A" and "B," or "B" and "A," identification markings **2810***b* are labeled "A" and "A." As shown by the connection diagram **2812**, this polarity configuration causes terminal of first device **2808***a* to be connected to terminal **2** of second device **2808***b*.

Labeling the reverse side of first duplex fiber optic connector **2804***a* with two "A" markings rather than simply reversing the positions of the "A" and "B" labels relative to its opposite side (or leaving the reverse side blank) can help

a user to readily identify the polarity of the patch cable **2806**. For example, when a user at the first device **2808***a* is inspecting first duplex fiber optic connector **2804***a*, the two "A" markings visible on the upward-facing side immediately identify the polarity as "A-A." This eliminates the need for the user to understand what the relative positions of the "A" and "B" labels convey about the polarity of the patch cable. Moreover, using two "A" markings to indicate "A-A" polarity conforms to the accepted nomenclature for crossed polarity connections.

FIG. **29** illustrates a methodology in accordance with one or more embodiments of the subject application. While, for purposes of simplicity of explanation, the methodology shown herein is described as a series of steps, it is to be understood and appreciated that the subject innovation is not limited by the order of steps, as some steps may, in accordance therewith, occur in a different order and/or concurrently with other steps from that shown and described herein. For example, those skilled in the art will understand and appreciate that a methodology could alternatively be represented as a series of interrelated states or events, such as in a state diagram. Moreover, not all illustrated steps may be required to implement a methodology in accordance with the innovation. Furthermore, interaction diagram(s) may represent methodologies, or methods, in accordance with the subject disclosure when disparate entities enact disparate portions of the methodologies. Further yet, two or more of the disclosed example methods can be implemented in combination with each other, to accomplish one or more features or advantages described herein.

FIG. **29** illustrates an example methodology **2900** for marking a duplex connector for polarity identification. Methodology **2900** can be implemented on substantially any type of duplex connector whose polarity can be reversed by inverting the connection, including but not limited to fiber optic duplex connectors or duplex connectors for copper data connections.

Initially, at **2902**, on a first side of a duplex connector housing, a first signal connector of the housing is labeled with an "A" and a second signal connector of the housing is labeled with a "B." At **2904**, on the second side of the duplex connector housing, the first signal connector of the housing is labeled with an "A" and the second signal connector of the housing is also labeled with an "A".

The above description of illustrated embodiments of the subject disclosure, including what is described in the Abstract, is not intended to be exhaustive or to limit the disclosed embodiments to the precise forms disclosed. While specific embodiments and examples are described herein for illustrative purposes, various modifications are possible that are considered within the scope of such embodiments and examples, as those skilled in the relevant art can recognize.

In this regard, while the disclosed subject matter has been described in connection with various embodiments and corresponding figures, where applicable, it is to be understood that other similar embodiments can be used or modifications and additions can be made to the described embodiments for performing the same, similar, alternative, or substitute function of the disclosed subject matter without deviating therefrom. Therefore, the disclosed subject matter should not be limited to any single embodiment described herein, but rather should be construed in breadth and scope in accordance with the appended claims below.

In addition, the term "or" is intended to mean an inclusive "or" rather than an exclusive "or." That is, unless specified otherwise, or clear from context, "X employs A or B" is intended to mean any of the natural inclusive permutations. That is, if X employs A; X employs B; or X employs both A and B, then "X employs A or B" is satisfied under any of the foregoing instances. Moreover, articles "a" and "an" as used in the subject specification and annexed drawings should generally be construed to mean "one or more" unless specified otherwise or clear from context to be directed to a singular form.

What has been described above includes examples of systems and methods illustrative of the disclosed subject matter. It is, of course, not possible to describe every combination of components or methodologies here. One of ordinary skill in the art may recognize that many further combinations and permutations of the claimed subject matter are possible. Furthermore, to the extent that the terms "includes," "has," "possesses," and the like are used in the detailed description, claims, appendices and drawings such terms are intended to be inclusive in a manner similar to the term "comprising" as "comprising" is interpreted when employed as a transitional word in a claim.

What is claimed is:

1. A duplex connector, comprising:

a first connector configured to plug into a first adapter; and

a second connector configured to plug into a second adapter;

wherein

the first connector and the second connector comprise respective first sides and respective second sides that are opposite the first sides,

while the first connector and the second connector are plugged into the first adapter and the second adapter according to a first polarity, the first sides are upward-facing,

while the first connector and the second connector are plugged into the first adapter and the second adapter according to a second polarity, the second sides are upward-facing,

the first side of the first connector is labeled with a first identifier,

the first side of the second connector is labeled with a second identifier,

the second side of the first connector is labeled with the first identifier, and

the second side of the second connector is labeled with the first identifier.

2. The duplex connector of claim **1**, wherein the first identifier is an "A" and the second identifier is a "B".

3. The duplex connector of claim **1**, wherein the first polarity is a straight-through polarity, and the second polarity is a crossed polarity.

4. The duplex connector of claim **1**, wherein the duplex connector is a fiber optic connector.

5. The duplex connector of claim **1**, wherein the first connector and the second connector comprise a first barrel projection and a second barrel projection, respectively, and wherein the first barrel projection and the second barrel projection are hollow and are configured to receive respective springs and ferrule assembles via front ends of the first barrel projection and the second barrel projection.

6. The duplex connector of claim **5**, wherein the first fiber connector and the second fiber connector further comprise a first front body and a second front body, respectively, that fit over the first barrel projection and the second barrel projection while the springs and the ferrule assemblies are in the first and second barrel projections, and wherein the first front body and the second front body comprise respective rear

openings that receive the first barrel projection and the second barrel projection, respectively.

7. The duplex connector of claim **6**, wherein

the first barrel projection and the second barrel projection comprise respective grooves at or near bases of the first barrel projection and the second barrel projection, and

rims formed on the rear openings comprise ridges configured to be received by the grooves of the first barrel projection and the second barrel projection while the first front body and the second front body are attached to the first barrel projection and the second barrel projection.

8. The duplex connector of claim **5**, wherein inner surfaces of the first barrel projection and the second barrel projection comprise geometric profiles conforming to a shape of ferrule holders of the ferrule assemblies.

9. A cable assembly, comprising:

a cable comprising at least two conductors; and

a duplex connector attached to an end of the cable, wherein the duplex connector comprises:

a transmit connector communicatively connected to a first conductor of the at least two conductors, and

a receive connector communicatively connected to a second conductor of the at least two conductors,

wherein

while the duplex connector is plugged into an adapter according to a first polarity, first sides of the transmit connector and the receive connector are upward-facing,

while the duplex connector is plugged into the adapter according to a second polarity, second sides of the connector housing are upward-facing,

the first side of the transmit connector comprises a transmit identifier marking,

the first side of the receive connector comprises a receive identifier marking,

the second side of the transmit connector comprises the receive identifier marking, and

the second side of the transmit connector comprises the receive identifier marking.

10. The cable assembly of claim **9**, wherein the transmit identifier marking comprises a letter "B" and the receive identifier marking comprises a letter "A".

11. The cable assembly of claim **9**, wherein the transmit identifier marking and the receive identifier marking are at least one of printed, stamped, or embossed on the connector housing.

12. The cable assembly of claim **9**, wherein the first polarity is a straight-through polarity, and the second polarity is a crossed polarity.

13. The cable assembly of claim **9**, wherein the at least two conductors are optical fibers.

14. The cable assembly of claim **9**, wherein the at least two conductors are copper conductors.

15. The cable assembly of claim **9**, wherein

the transmit connector and the receive connector comprise a first barrel projection and a second barrel projection, respectively,

the first barrel projection and the second barrel projection are hollow and are configured to receive respective springs and ferrule assembles via front ends of the first barrel projection and the second barrel projection, and

the first conductor and the second conductor are connected to the ferrule assemblies.

16. The cable assembly of claim **15**, wherein the transmit connector and the receive connector further comprise a first front body and a second front body, respectively, that fit over the first barrel projection and the second barrel projection while the springs and the ferrule assemblies are in the first and second barrel projections, and wherein the first front body and the second front body comprise respective rear openings that receive the first barrel projection and the second barrel projection, respectively.

17. The cable assembly of claim **16**, wherein

the first barrel projection and the second barrel projection comprise respective grooves at or near bases of the first barrel projection and the second barrel projection, and

rims formed on the rear openings comprise ridges configured to be received by the grooves of the first barrel projection and the second barrel projection while the first front body and the second front body are attached to the first barrel projection and the second barrel projection.

18. A method, comprising:

rotating a first front body of a duplex connector about a first barrel projection on which the first front body is attached, wherein the first front body and the first barrel projection house a first ferrule assembly comprising a first ferrule that protrudes from a first front opening of the first front body, wherein a first side of the duplex connector contains a first identifying mark in association with the first front body, and wherein a second side of the duplex connector contains a second identifying mark in association with the first front body;

rotating a second front body of the fiber optic connector about a second barrel projection on which the second front body is attached, wherein the second front body and the second barrel projection house a second ferrule assembly comprising a second ferrule that protrudes from a second front opening of the second front body, wherein the first side of the duplex connector contains a second identifying mark in association with the second front body, and wherein the second side of the duplex connector contains the first identifying mark in association with the second front body;

removing a puller from a first side of the fiber optic connector; and

attaching the puller to a second side of the fiber optic connector opposite the first side.

19. The method of claim **18**, further comprising:

attaching the duplex connector to an end of a cable comprising two or more conductors;

connecting a first conductor of the two or more conductors to the first ferrule assembly within the duplex connector; and

connecting a second conductor of the two or more conductors to the second ferrule assembly within the duplex connector.

20. The method of claim **19**, further comprising inverting the duplex connector to facilitate reversing a polarity of the cable.

* * * * *