UNITED STATES PATENT AND TRADEMARK OFFICE
PATENT TRIAL AND APPEAL BOARD

Camel Manufacturing Company, LLC

Petitioner,

v.

DLX Enterprises, LLC,

Patent Owner.

Case No. PGR2024-_____

U.S. Patent No. 11,732,496

EXHIBIT 1018

ENGINEERING DRAWINGS OF PETITIONER'S TENT

REV	DESCRIPTION	DATE	APPROVED

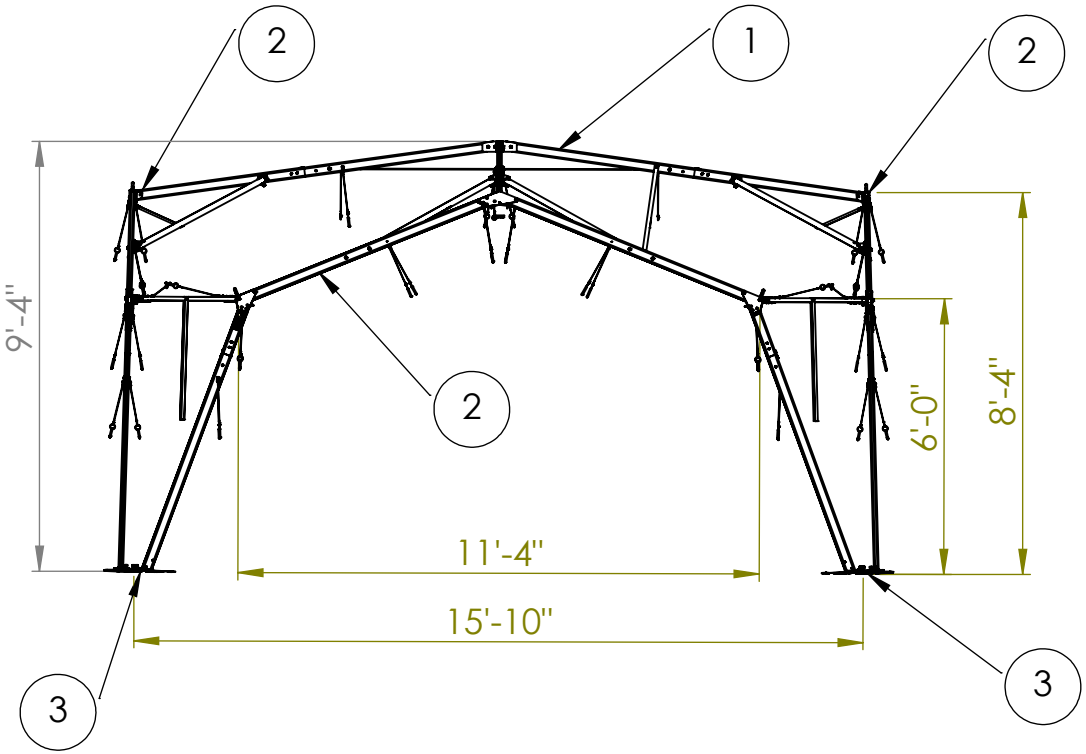

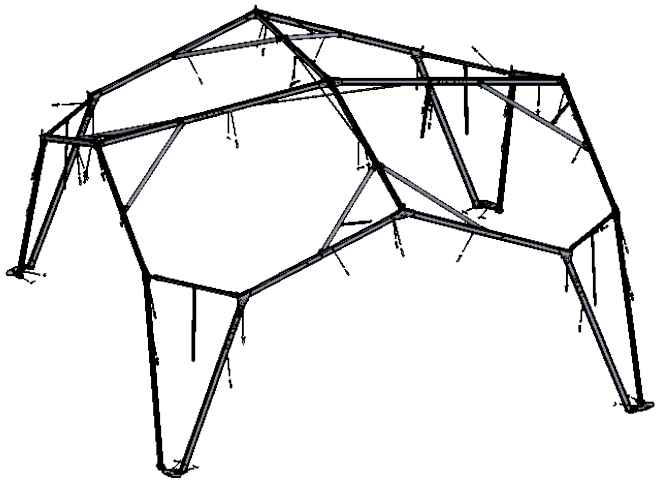

UNLESS OTHERWISE SPECIFIED DIMENSIONS ARE IN INCHES

TOLERANCES:

ANGLE: ±1°

FRACTION: ± 1/16

2 PLACE DIM: ± 0.02

3 PLACE DIM: ±0.010

CAMEL MANUFACTURING

THIS DRAWING CONTAINS PROPRIETARY INFORMATION WHICH IS TO BE HELD CONFIDENTIAL, AND MAY NOT BE REPRODUCED OR DISCLOSED TO OTHERS WITHOUT THE PRIOR WRITTEN CONSENT OF CAMEL MANUFACTURING COMPANY OR DULY AUTHORIZED REPRESENTATIVE THEREOF. THIS INFORMATION SHALL NOT BE RELEASED OR DISCLOSED UNDER THE FREEDOM OF INFORMATION ACT (5 U.S.C. 552) OR ANY OTHER CIRCUMSTANCES.

	NAME	DATE
DRAWN	K. Brown	10/24/2019
CHECKED		
APPROVED		

MATERIAL

FINISH

Camel Manufacturing Co.
176 Luther Seiber Lane Pioneer, TN 37847

TITLE: Pioneer Hub Assembly

DWG. NO. PHB-000-CMC REV 0

SCALE: 1:50 SHEET 1 OF 3

NOTES:

REV	DESCRIPTION	DATE	APPROVED

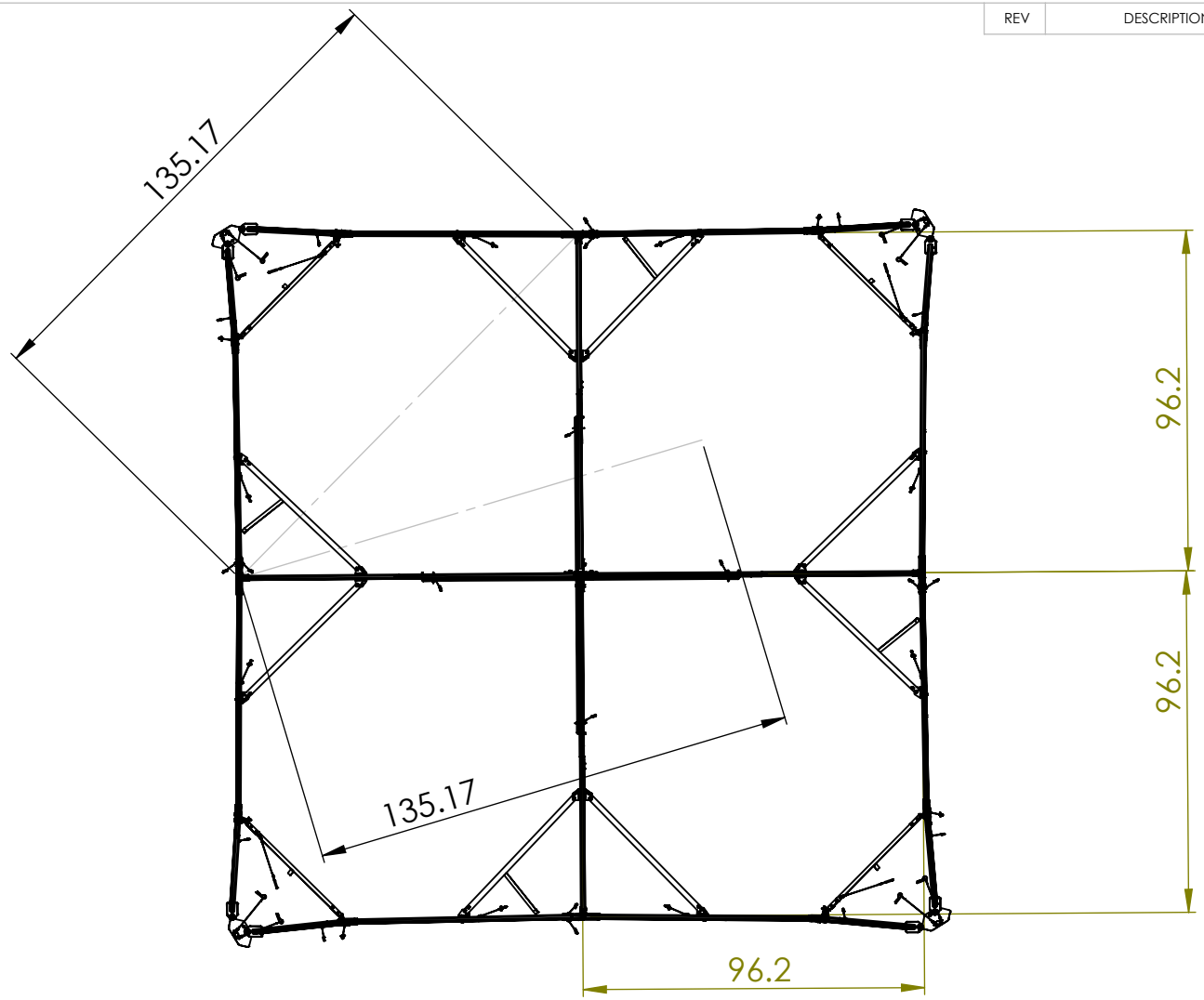

UNLESS OTHERWISE SPECIFIED DIMENSIONS ARE IN INCHES

TOLERANCES:

ANGLE: ±1°

FRACTION: $\pm \frac{1}{16}$

2 PLACE DIM: ± 0.02

3 PLACE DIM: ±0.010

CAMEL MANUFACTURING

THIS DRAWING CONTAINS PROPRIETARY INFORMATION WHICH IS TO BE HELD CONFIDENTIAL, AND MAY NOT BE REPRODUCED OR DISCLOSED TO OTHERS WITHOUT THE PRIOR WRITTEN CONSENT OF CAMEL MANUFACTURING COMPANY OR DULY AUTHORIZED REPRESENTATIVE THEREOF. THIS INFORMATION SHALL NOT BE RELEASED OR DISCLOSED UNDER THE FREEDOM OF INFORMATION ACT (5 U.S.C. 552) OR ANY OTHER CIRCUMSTANCES.

	NAME	DATE
DRAWN	K. Brown	10/24/2019
CHECKED		
APPROVED		

MATERIAL

FINISH

Camel Manufacturing Co.
176 Luther Seiber Lane Pioneer, TN 37847

TITLE: Pioneer Hub Assembly

DWG. NO. PHB-000-CMC REV 0

SCALE: 1:200 SHEET 2 OF 3

NOTES:

REV	DESCRIPTION	DATE	APPROVED

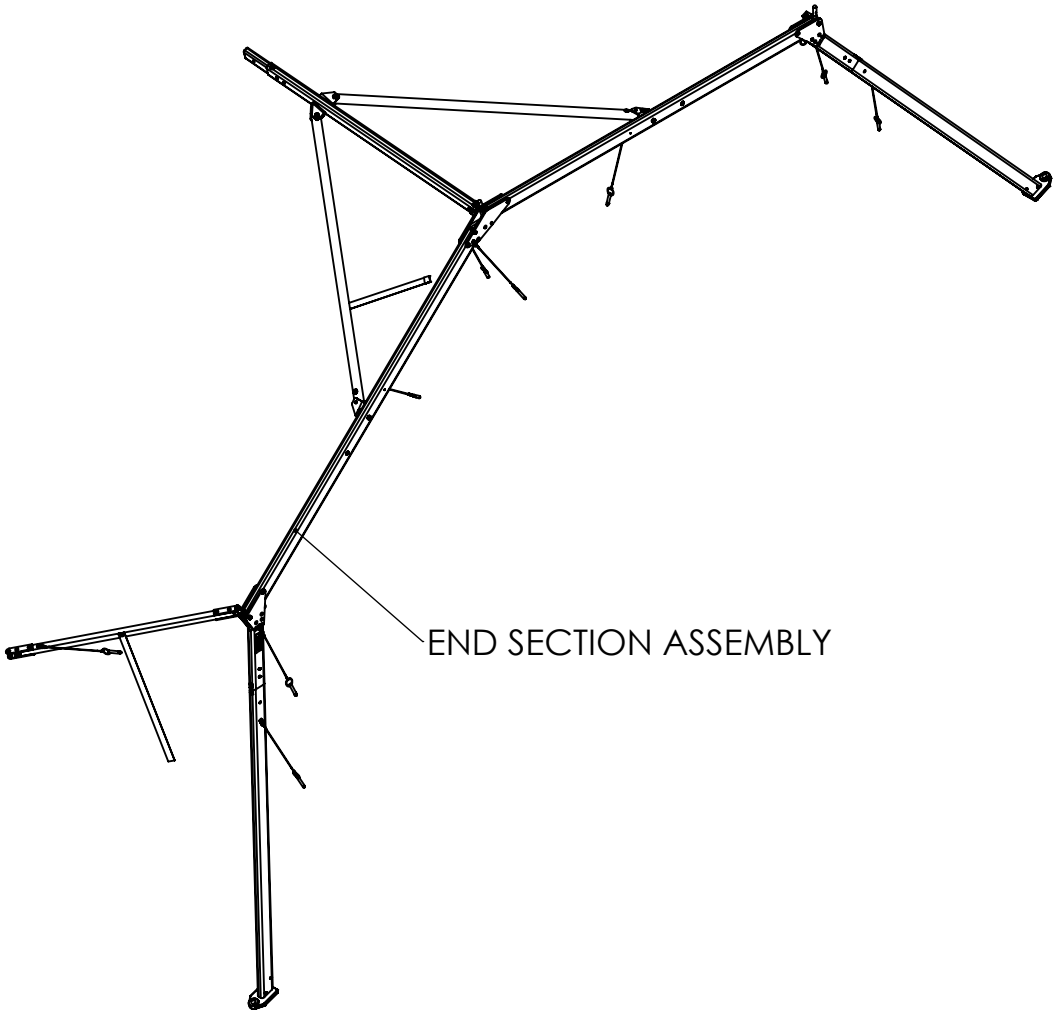

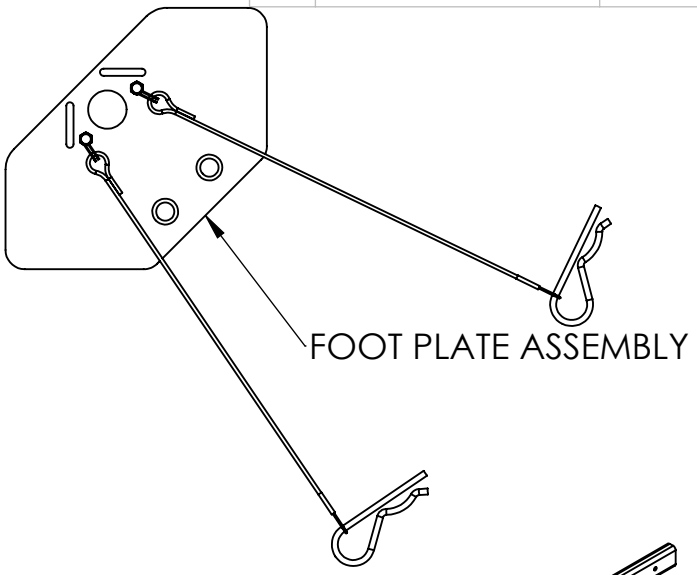

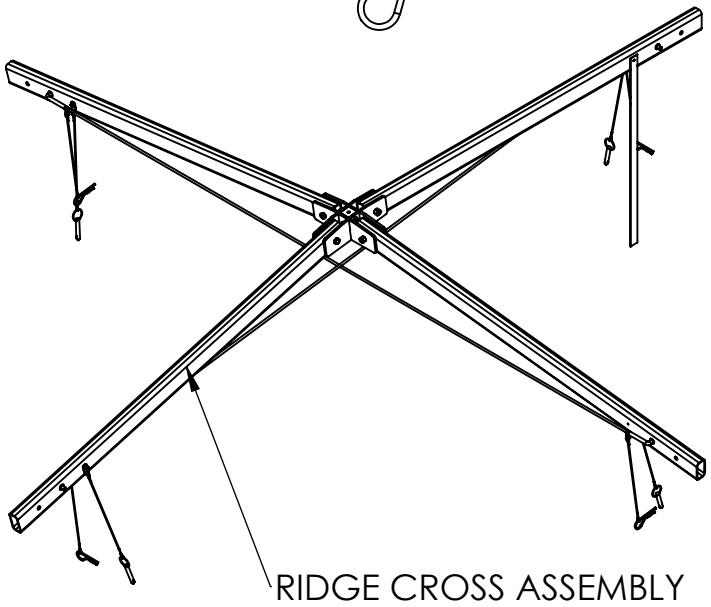

UNLESS OTHERWISE SPECIFIED DIMENSIONS ARE IN INCHES

TOLERANCES:

ANGLE: ±1°

FRACTION: $\pm \frac{1}{16}$

2 PLACE DIM: ± 0.02

3 PLACE DIM: ±0.010

CAMEL MANUFACTURING

THIS DRAWING CONTAINS PROPRIETARY INFORMATION WHICH IS TO BE HELD CONFIDENTIAL, AND MAY NOT BE REPRODUCED OR DISCLOSED TO OTHERS WITHOUT THE PRIOR WRITTEN CONSENT OF CAMEL MANUFACTURING COMPANY OR DULY AUTHORIZED REPRESENTATIVE THEREOF. THIS INFORMATION SHALL NOT BE RELEASED OR DISCLOSED UNDER THE FREEDOM OF INFORMATION ACT (5 U.S.C. 552) OR ANY OTHER CIRCUMSTANCES.

	NAME	DATE
DRAWN	K. Brown	10/24/2019
CHECKED		
APPROVED		

MATERIAL

FINISH

Camel Manufacturing Co.
176 Luther Seiber Lane Pioneer, TN 37847

TITLE: Pioneer Hub Assembly

DWG. NO. PHB-000-CMC REV 0

SCALE: 1:200 SHEET 3 OF 3