UNITED STATES PATENT AND TRADEMARK OFFICE
PATENT TRIAL AND APPEAL BOARD

Camel Manufacturing Company, LLC

Petitioner,

v.

DLX Enterprises, LLC,

Patent Owner.

Case No. PGR2024-00033
U.S. Patent No. 11,732,496

EXHIBIT 1008

U.S. PATENT NO 10,309,093

US010309093B1

(12) **United States Patent**
Urhausen et al.

(10) **Patent No.: US 10,309,093 B1**
(45) **Date of Patent: Jun. 4, 2019**

(54) **SHELTER AND HUB SYSTEM**

(71) Applicant: **DLX Enterprises, LLC**, Eugene, OR (US)

(72) Inventors: **Jonathan Urhausen**, Eugene, OR (US); **Adam Barr**, Eugene, OR (US); **Donald Bierman**, Eugene, OR (US); **Matt Tiller**, Eugene, OR (US)

(73) Assignee: **DLX Enterprises, LLC**, Eugene, OR (US)

(*) Notice: Subject to any disclaimer, the term of this patent is extended or adjusted under 35 U.S.C. 154(b) by 0 days.

(21) Appl. No.: **15/639,261**

(22) Filed: **Jun. 30, 2017**

Related U.S. Application Data

(60) Provisional application No. 62/356,793, filed on Jun. 30, 2016.

(51) **Int. Cl.**

E04H 15/44	(2006.01)
E04H 15/50	(2006.01)
E04B 1/19	(2006.01)
E04H 15/36	(2006.01)

(52) **U.S. Cl.**
CPC ***E04B 1/1903*** (2013.01); ***E04H 15/36*** (2013.01); ***E04H 15/44*** (2013.01); ***E04H 15/50*** (2013.01); *E04B 2001/1927* (2013.01); *E04B 2001/1957* (2013.01)

(58) **Field of Classification Search**
CPC E04H 15/48; E04H 15/64; E04H 15/34; E04H 15/50; E04H 15/44; E04H 15/36; E04H 15/32; E04H 15/42; E04H 15/505; E04B 1/19; E04B 1/1903; E04B 1/40; E04B 2001/1927; E04B 2001/1957; E04B 1/32; Y10T 403/44
USPC 135/87, 121, 143–147, 151, 119, 135/120.1–120.4, 124, 131, 135, 156; 52/655.1, 81.3; 403/217–219
See application file for complete search history.

(56) **References Cited**

U.S. PATENT DOCUMENTS

4,706,696	A	11/1987	Gillis	135/102
4,846,204	A *	7/1989	Sok Kyu	E04H 15/324 135/145
4,945,936	A *	8/1990	Surrendi	E04H 15/322 135/126
5,069,572	A	12/1991	Niksic	403/107
5,634,483	A	6/1997	Gwin	135/131
5,666,986	A *	9/1997	Fox	E04H 15/42 135/135
D454,609	S	3/2002	Meyerhoffer et al.	D21/839
6,553,698	B1 *	4/2003	Kemeny	G09F 15/0068 160/135
6,772,780	B2 *	8/2004	Price	E04H 15/50 135/128
6,802,329	B2	10/2004	Chen	135/135

(Continued)

Primary Examiner — Winnie Yip
(74) *Attorney, Agent, or Firm* — MacCord Mason PLLC

(57) **ABSTRACT**

A shelter system is shown and described. A hub for a shelter system is shown and described. A frame for a shelter system is shown and described. In one embodiment, the shelter system includes a frame, a cover and a hub. The frame may be collapsible. The cover is configured to fit with the frame. The hub may include a receiver slot, a receiver sleeve and an attachment projection. The result is a shelter system with reduced set up time, effort and requirements and improved strength and ease of use. The inventions may also be considered a shelter kit and/or a shelter and hub method.

15 Claims, 21 Drawing Sheets

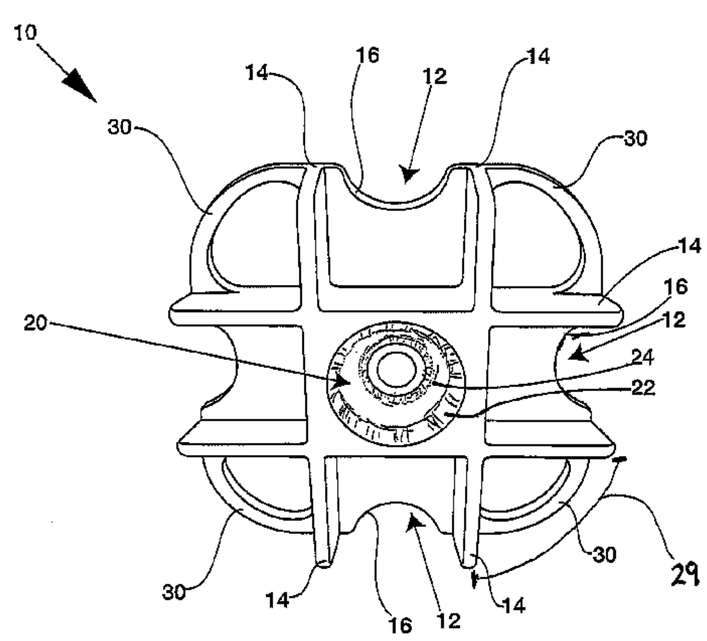

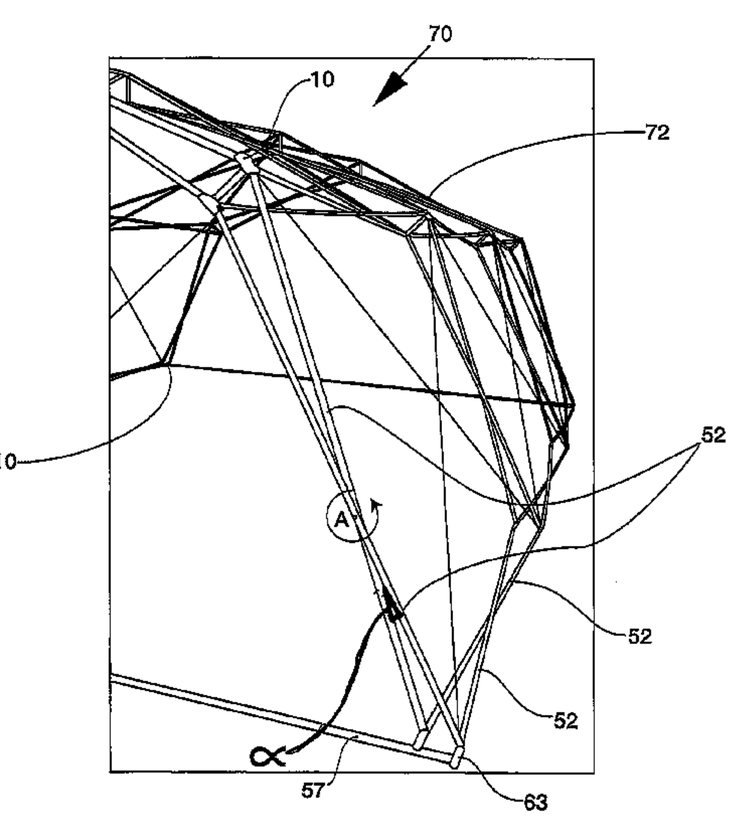

Camel Manufacturing Company, LLC,
Case No. PGR2024-00033; Exhibit 1008

(56) **References Cited**

U.S. PATENT DOCUMENTS

7,131,236	B2 *	11/2006	Sample	E04H 1/1277 52/79.5
7,556,054	B2 *	7/2009	Zeigler	E04H 15/50 135/131
8,925,565	B2 *	1/2015	Choi	E04H 15/48 135/135
9,243,423	B2 *	1/2016	Jin	E04H 15/48
9,243,424	B2 *	1/2016	Jin	E04H 15/48
9,631,393	B2 *	4/2017	Zeigler	E04H 15/18
2006/0260666	A1	11/2006	Choi	135/94
2013/0008478	A1 *	1/2013	Prieto Estebanez	E04H 15/48 135/147
2014/0182643	A1 *	7/2014	Yang	E04H 15/42 135/147

* cited by examiner

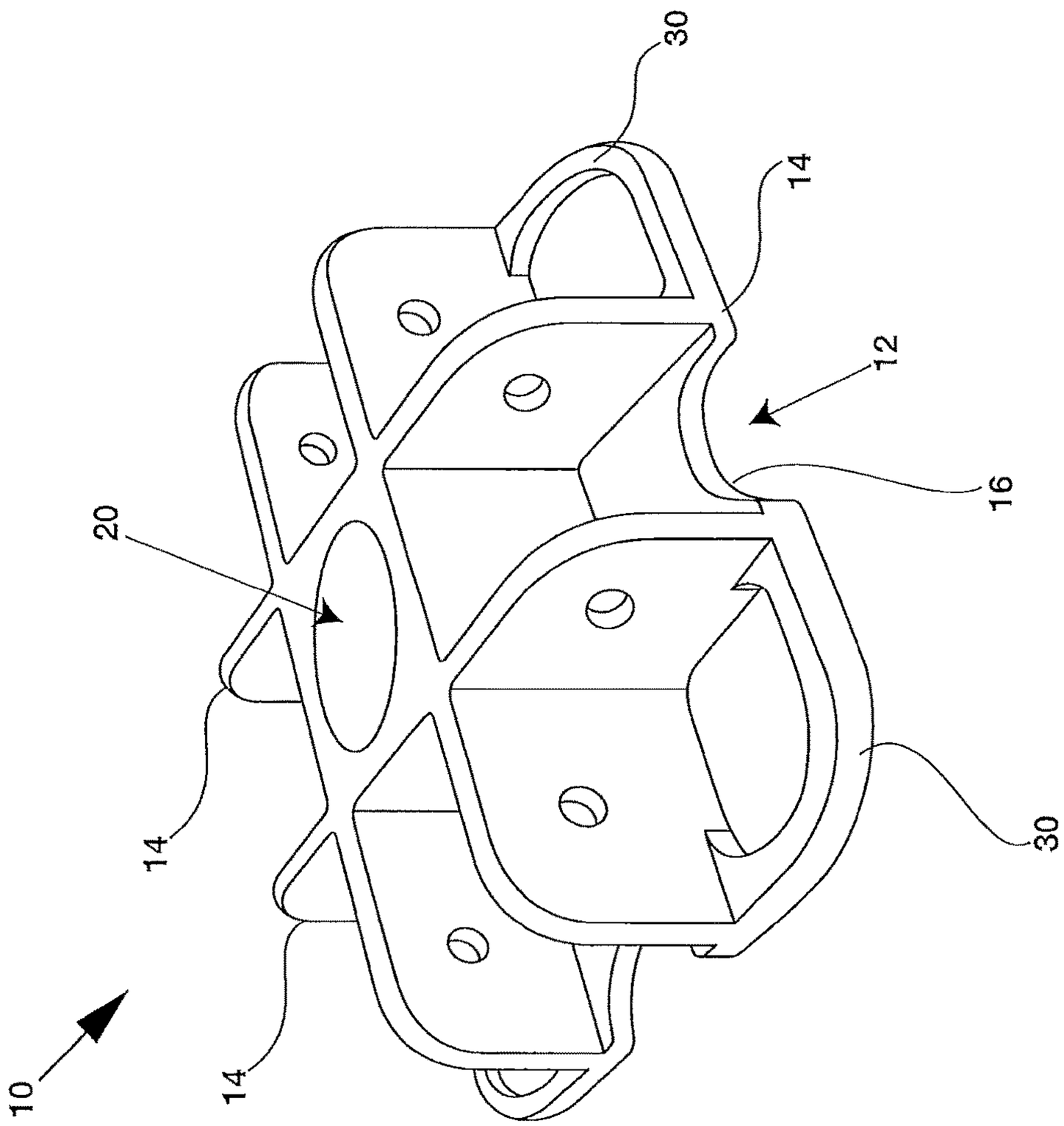

FIG. 1

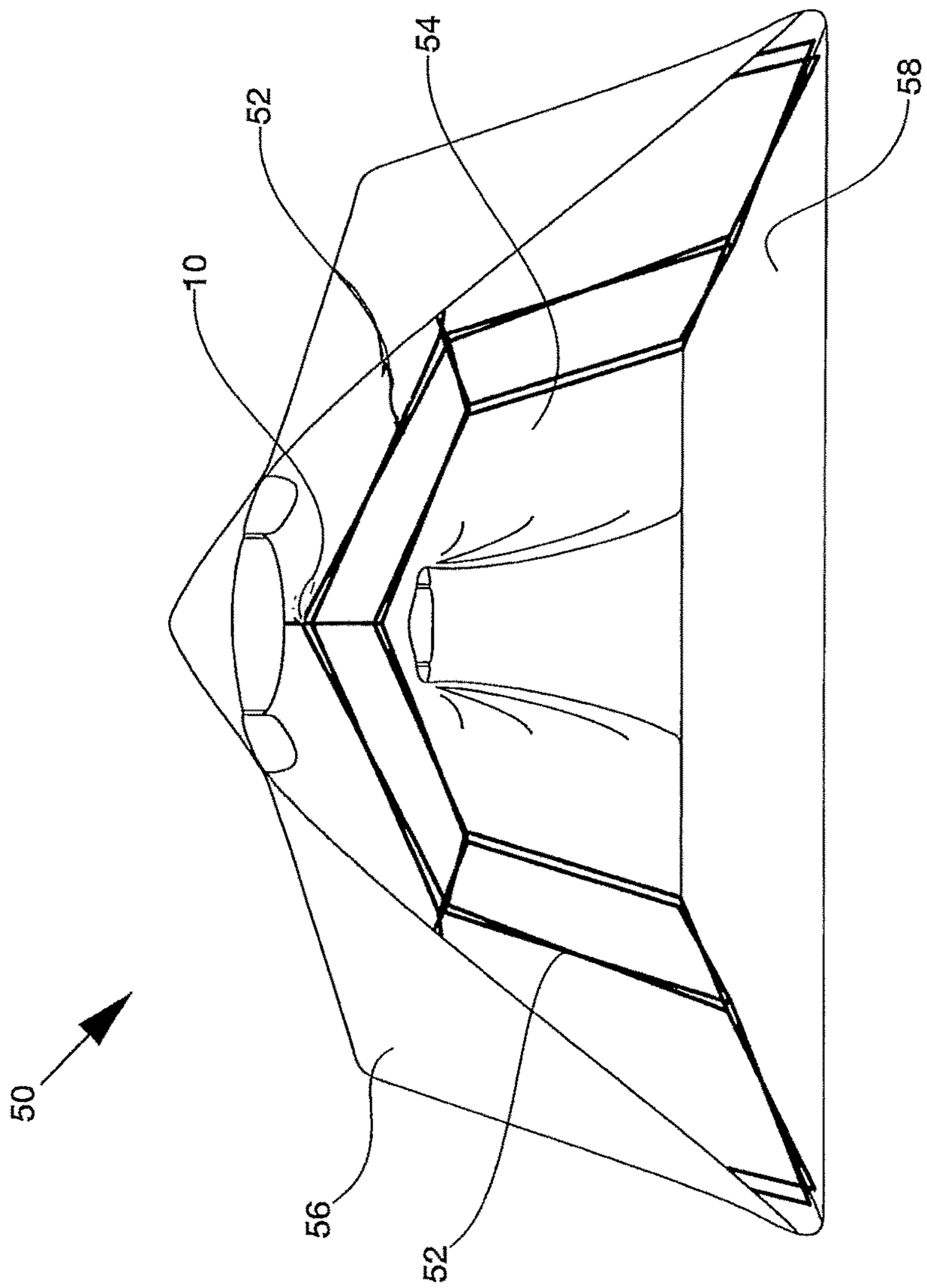

FIG. 2

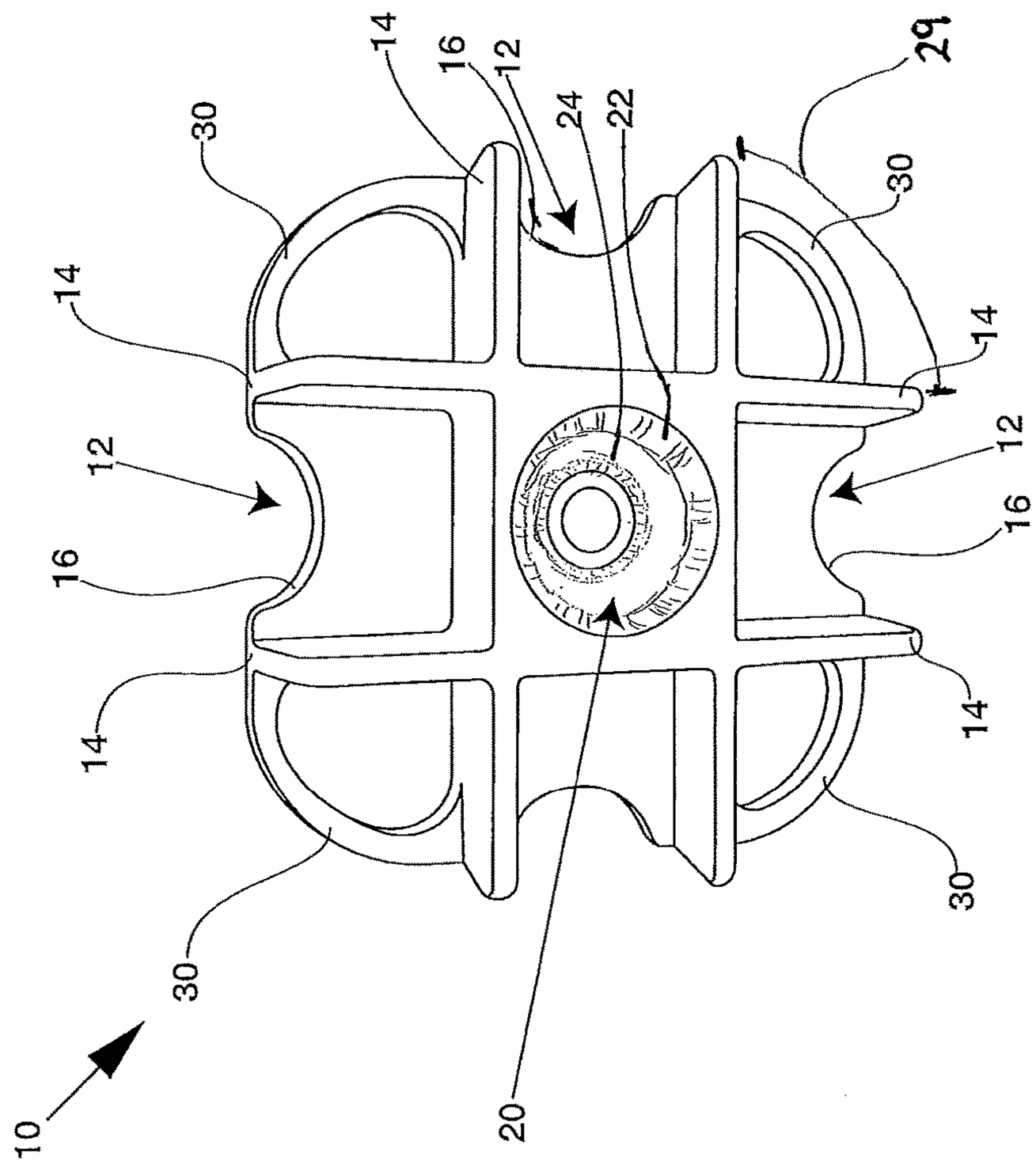

FIG. 3

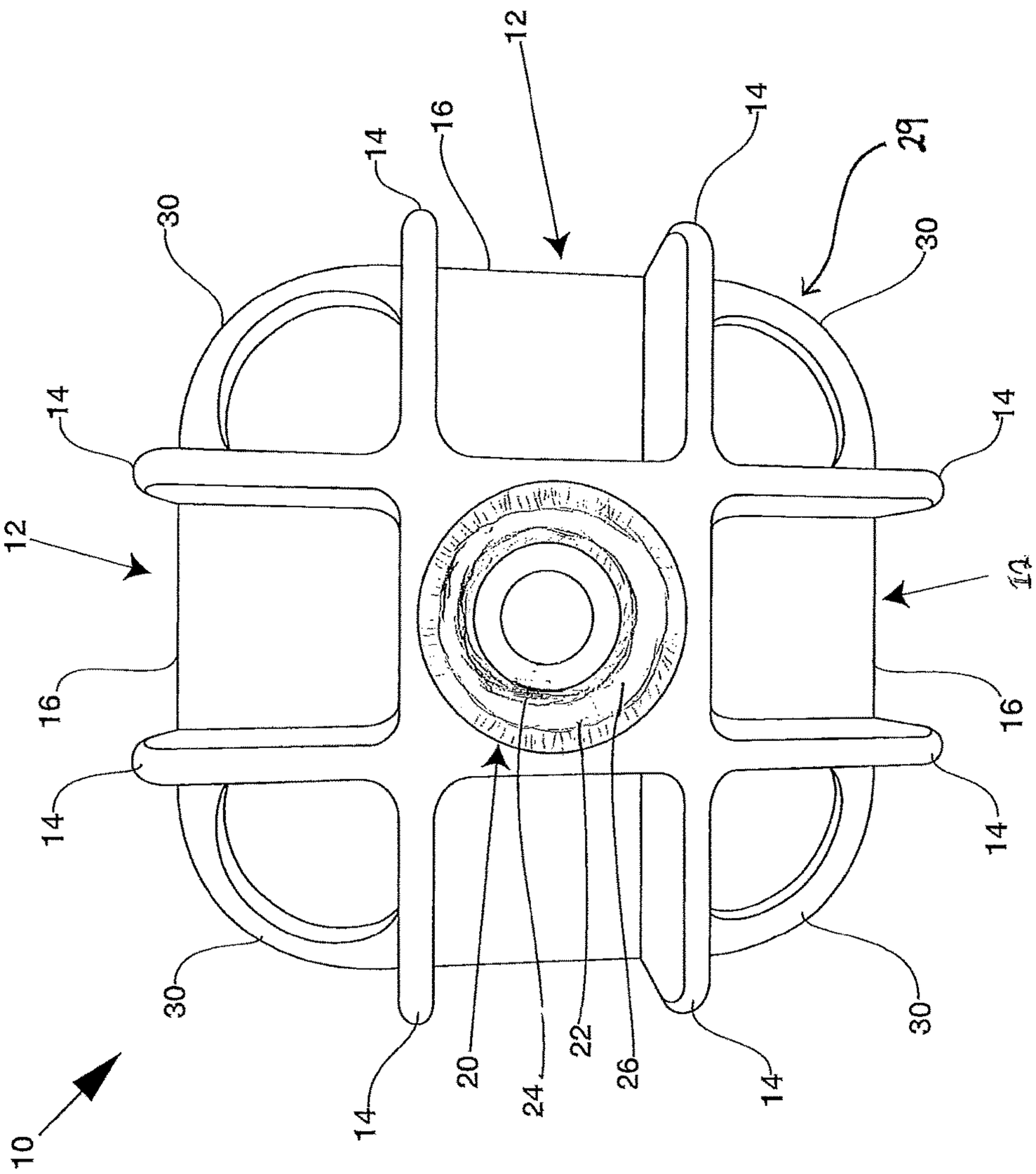

FIG. 4

Camel Manufacturing Company, LLC,
Case No. PGR2024-00033; Exhibit 1008

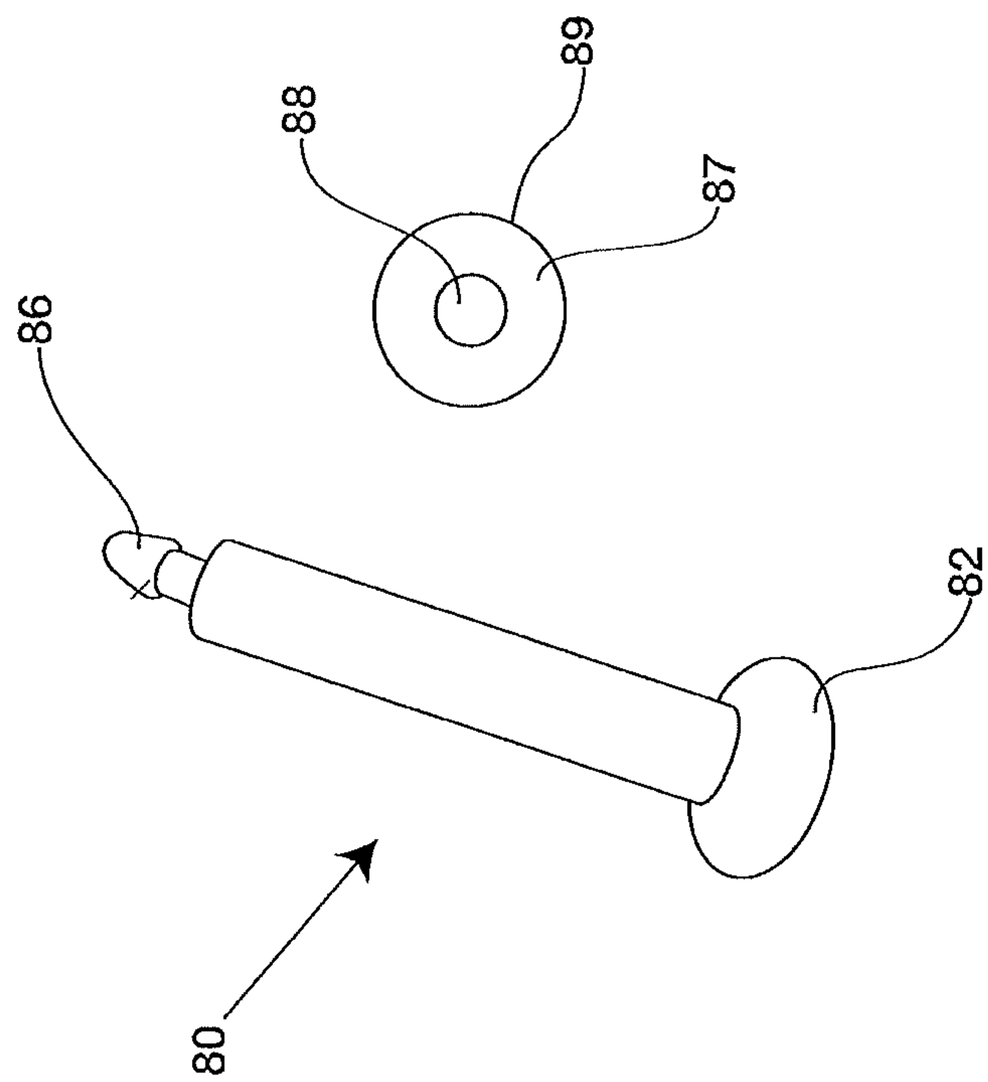

FIG. 5

Camel Manufacturing Company, LLC,
Case No. PGR2024-00033; Exhibit 1008

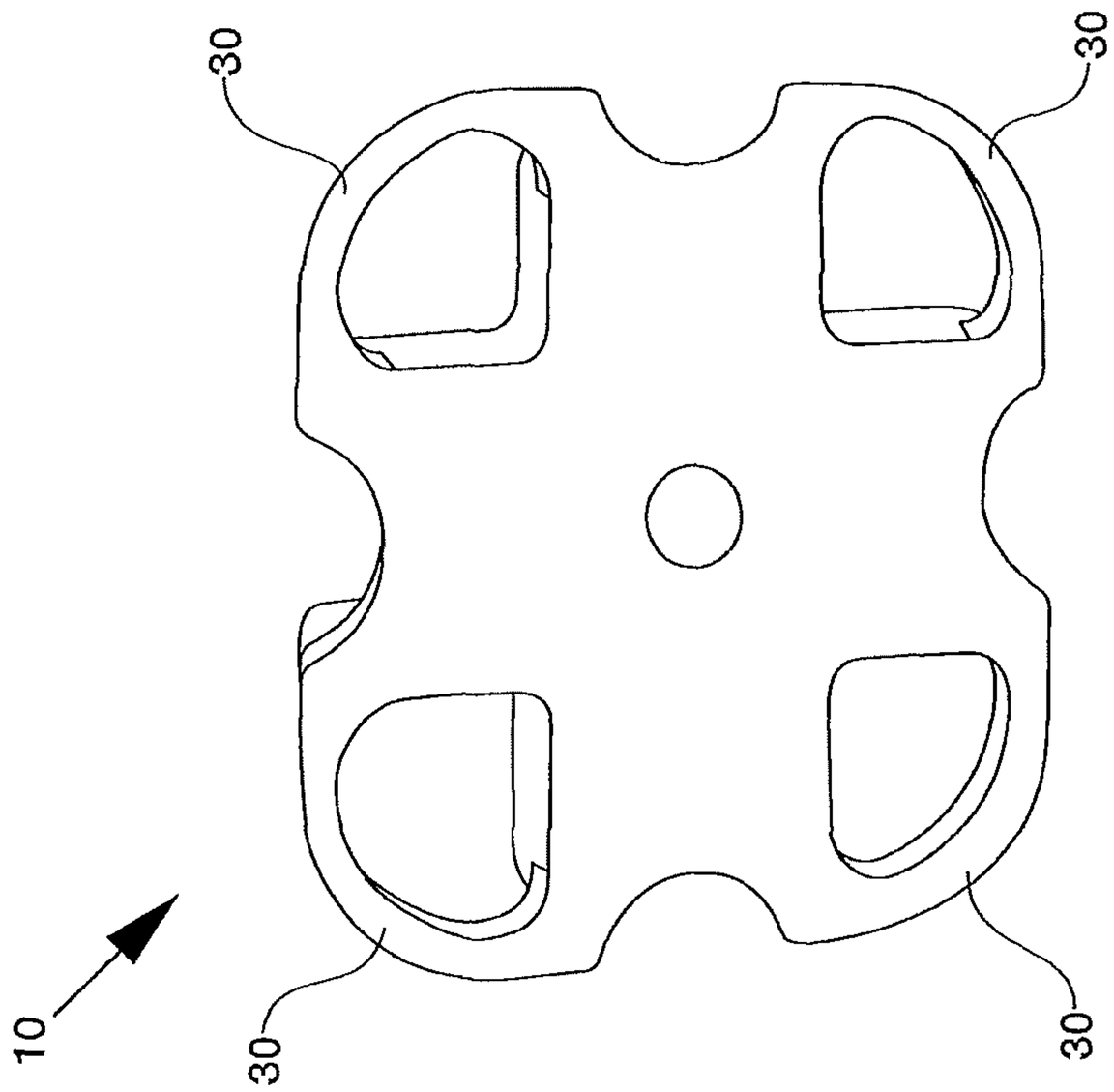

FIG. 6

Camel Manufacturing Company, LLC,
Case No. PGR2024-00033; Exhibit 1008

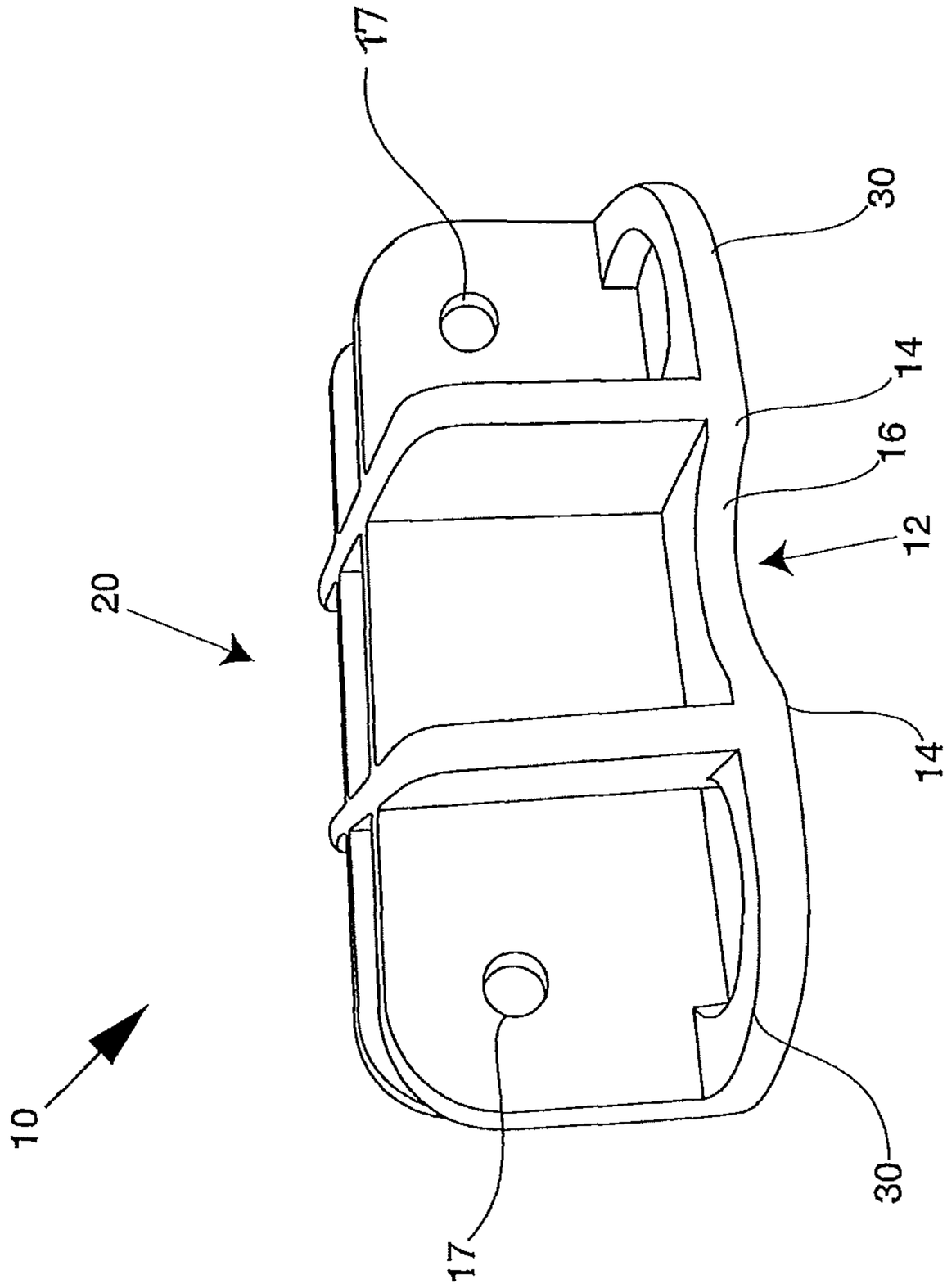

FIG. 7

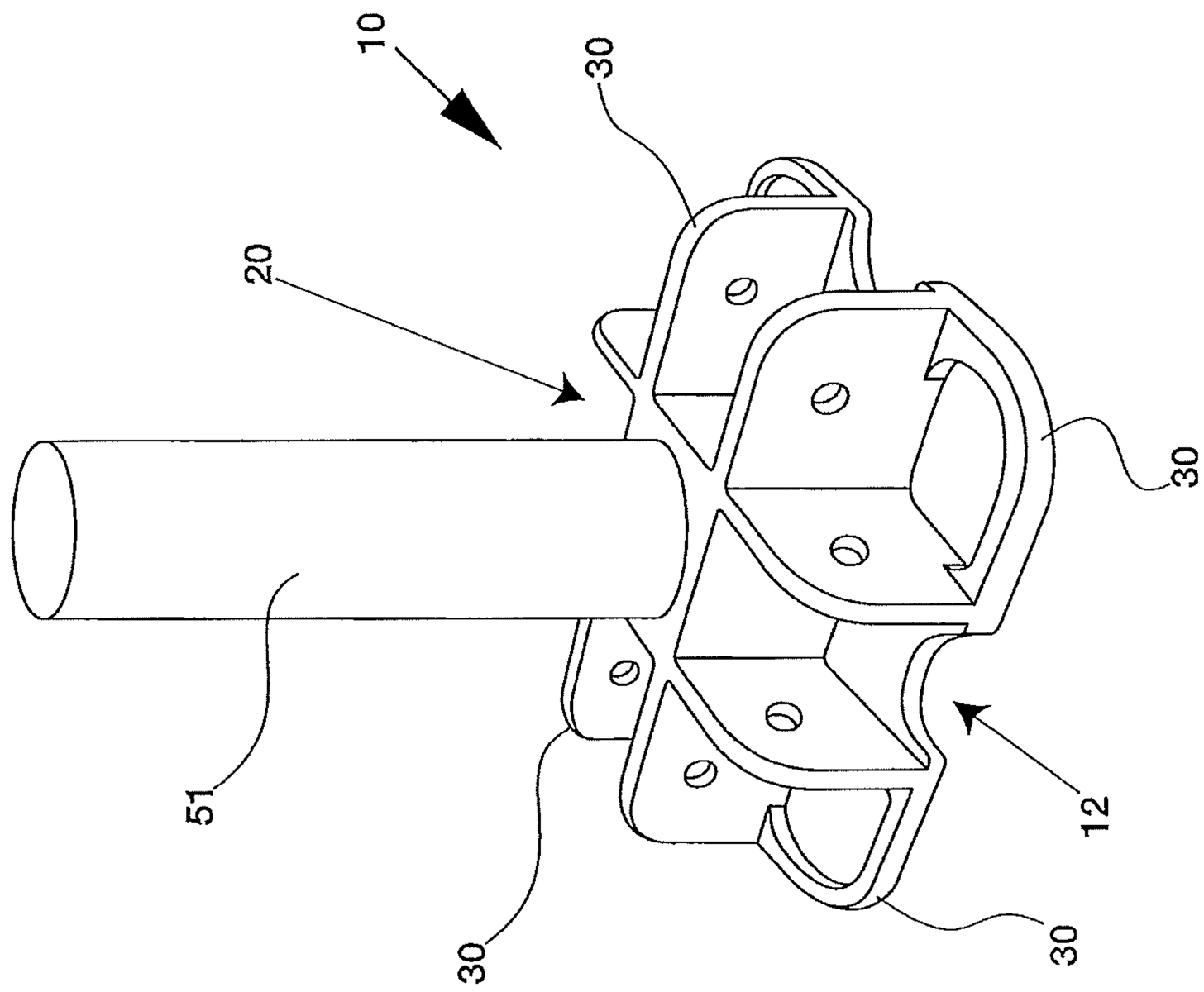

FIG. 8

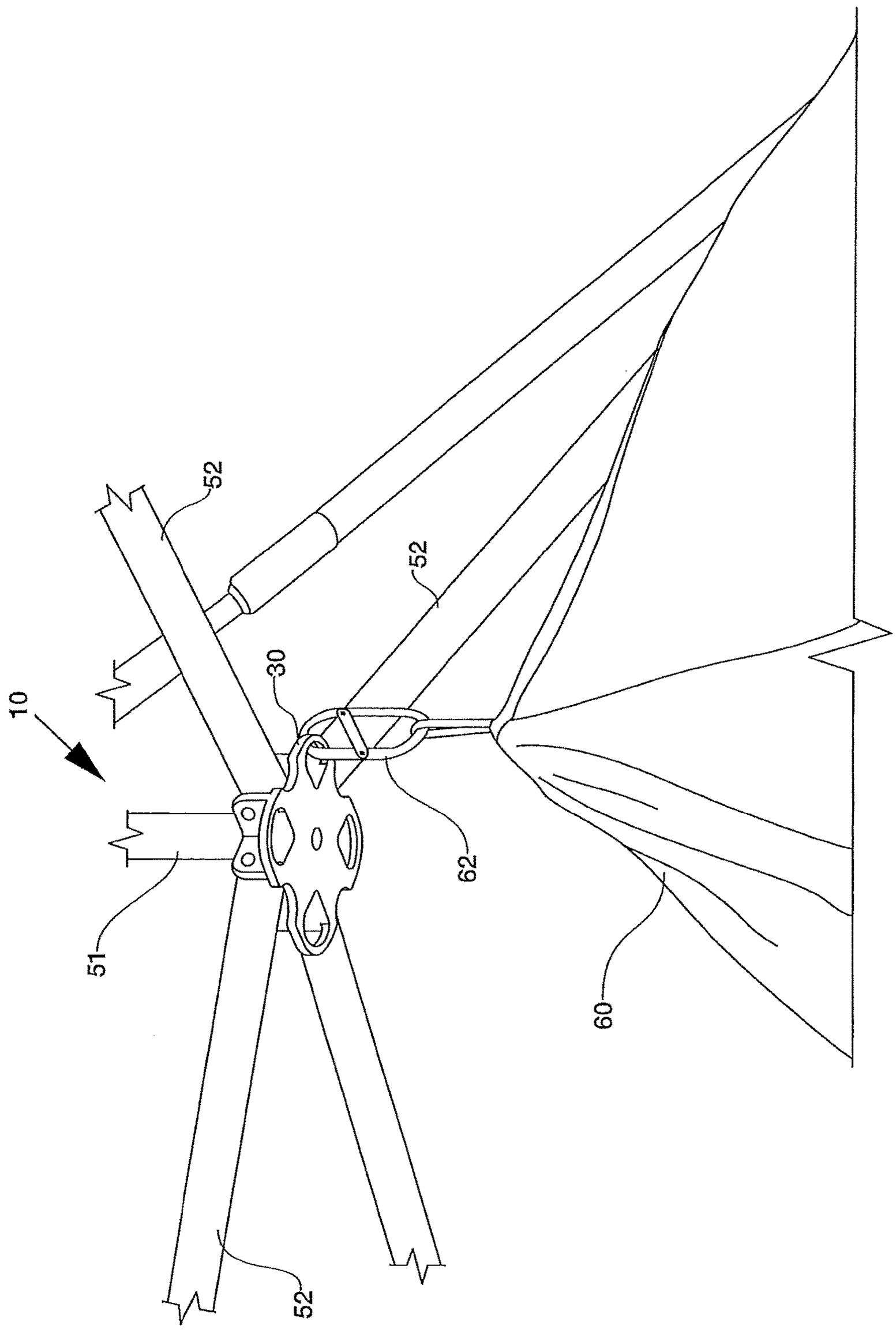

FIG. 9

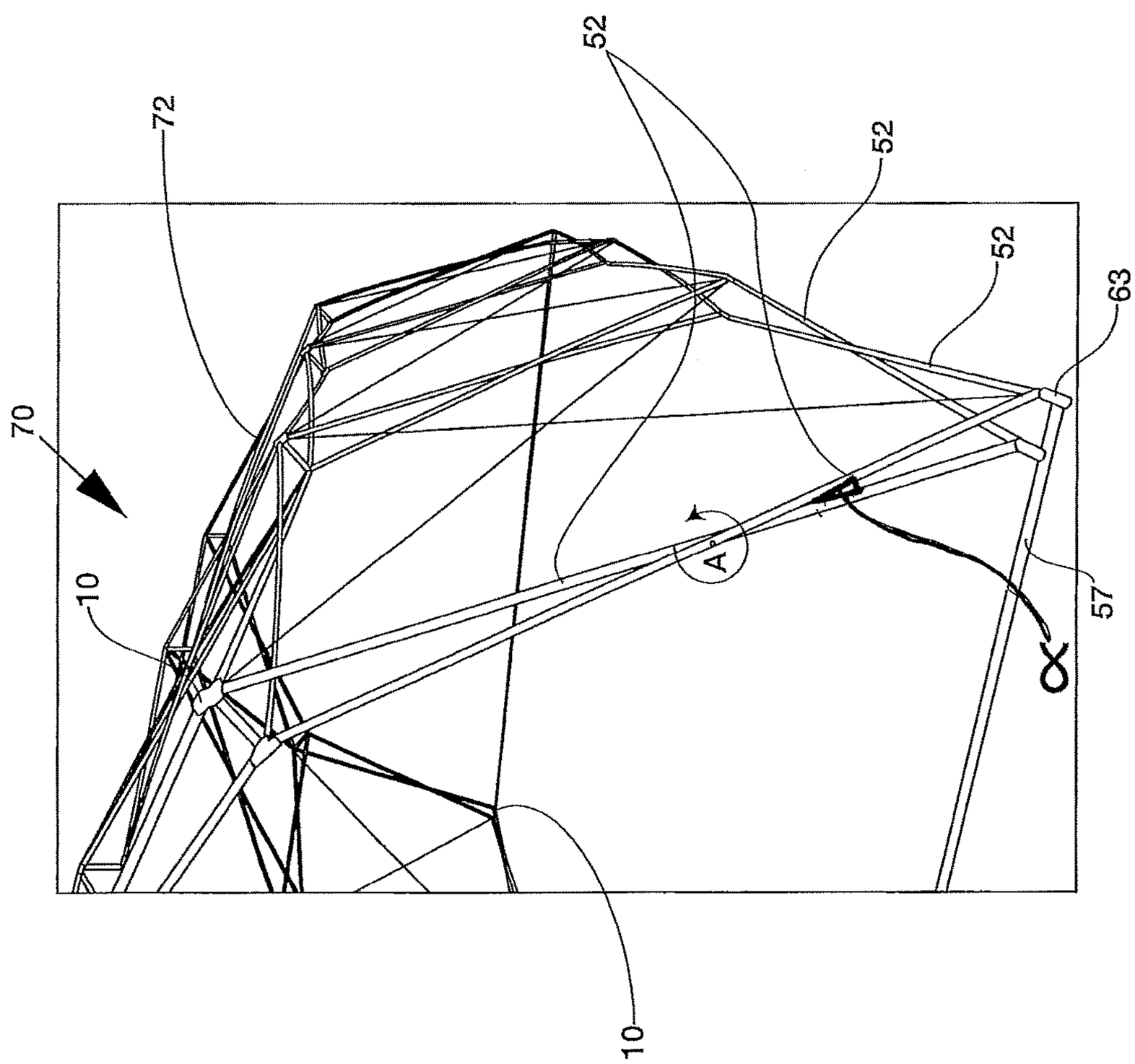

FIG. 10

Camel Manufacturing Company, LLC,
Case No. PGR2024-00033; Exhibit 1008

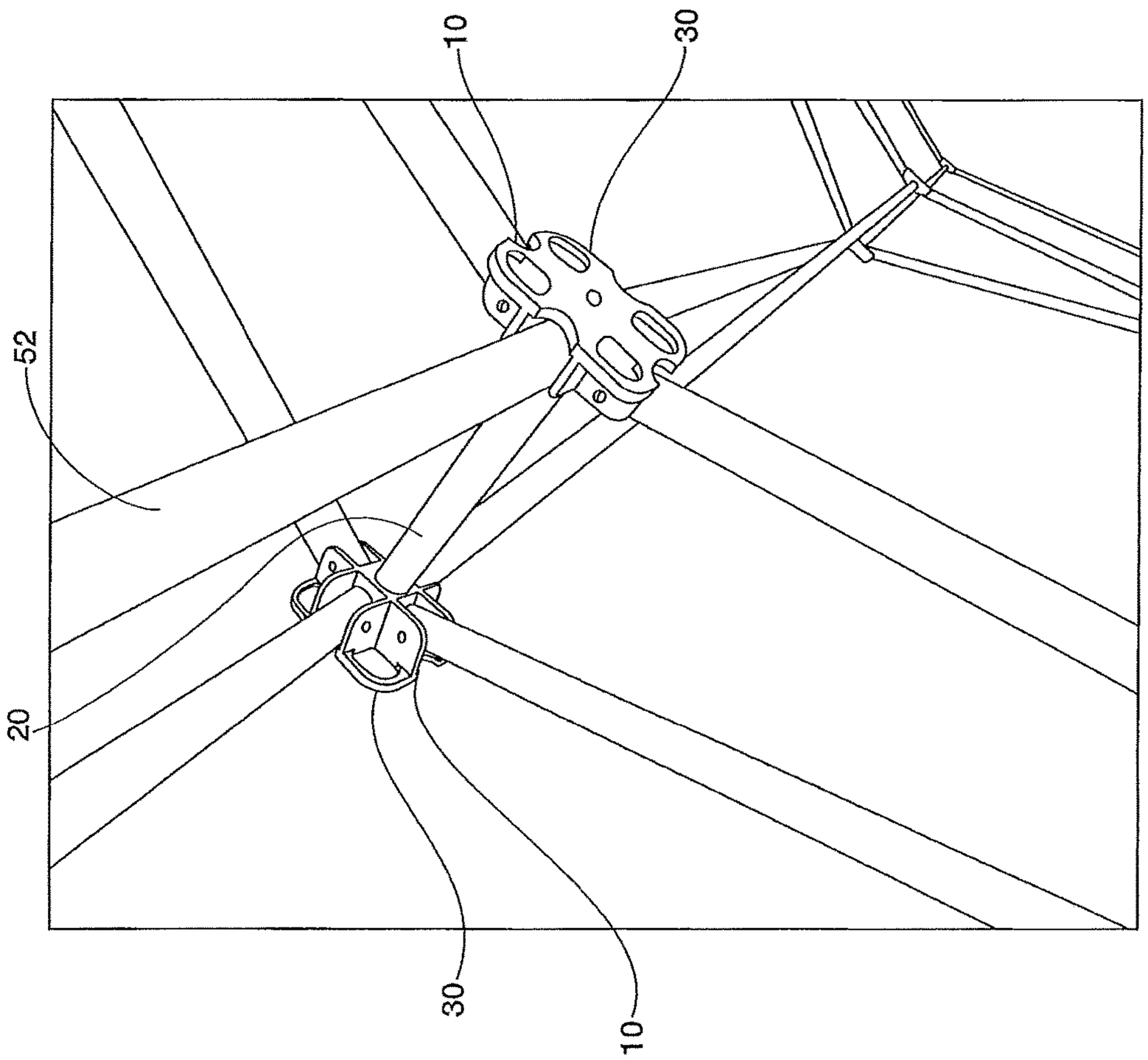

FIG. 11

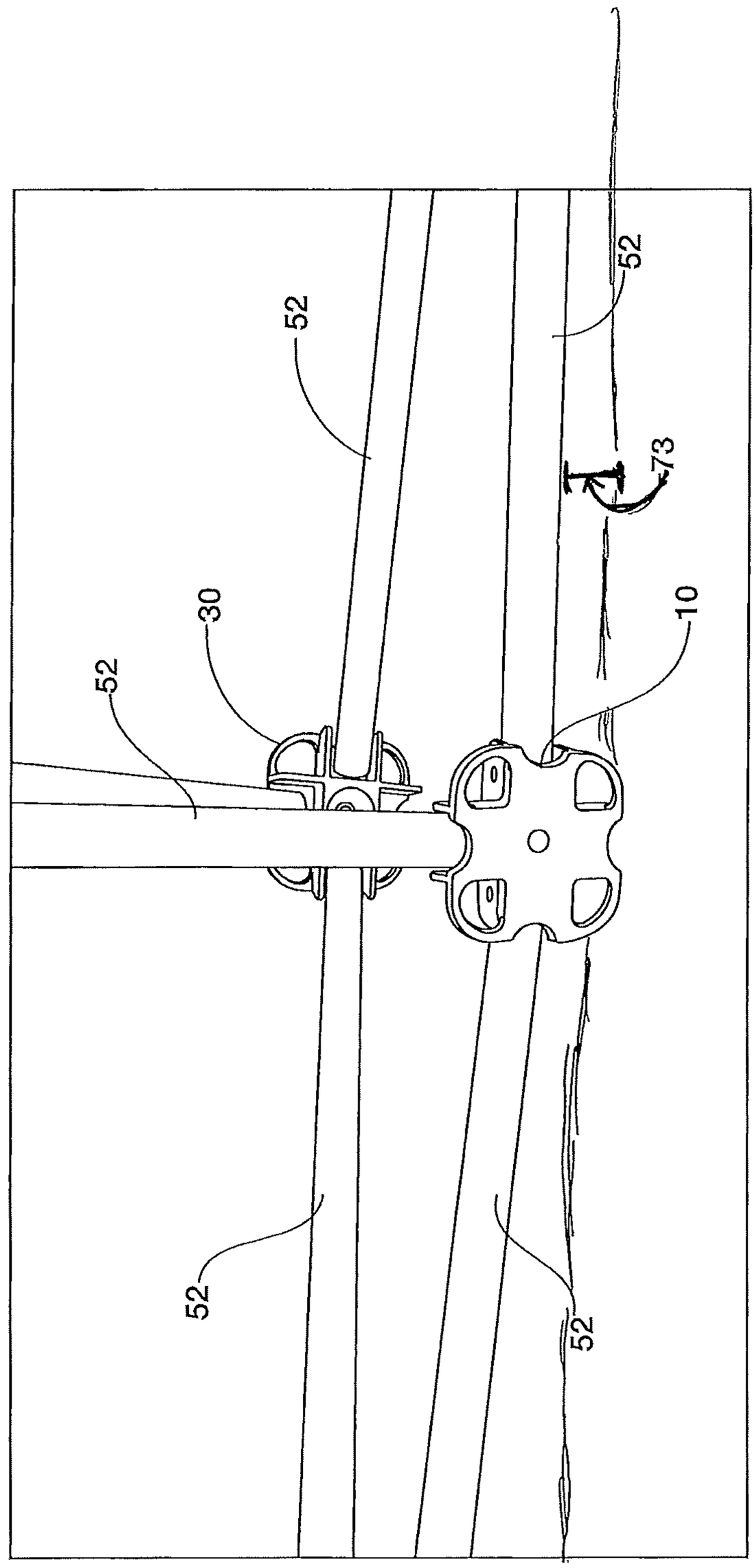

FIG. 12

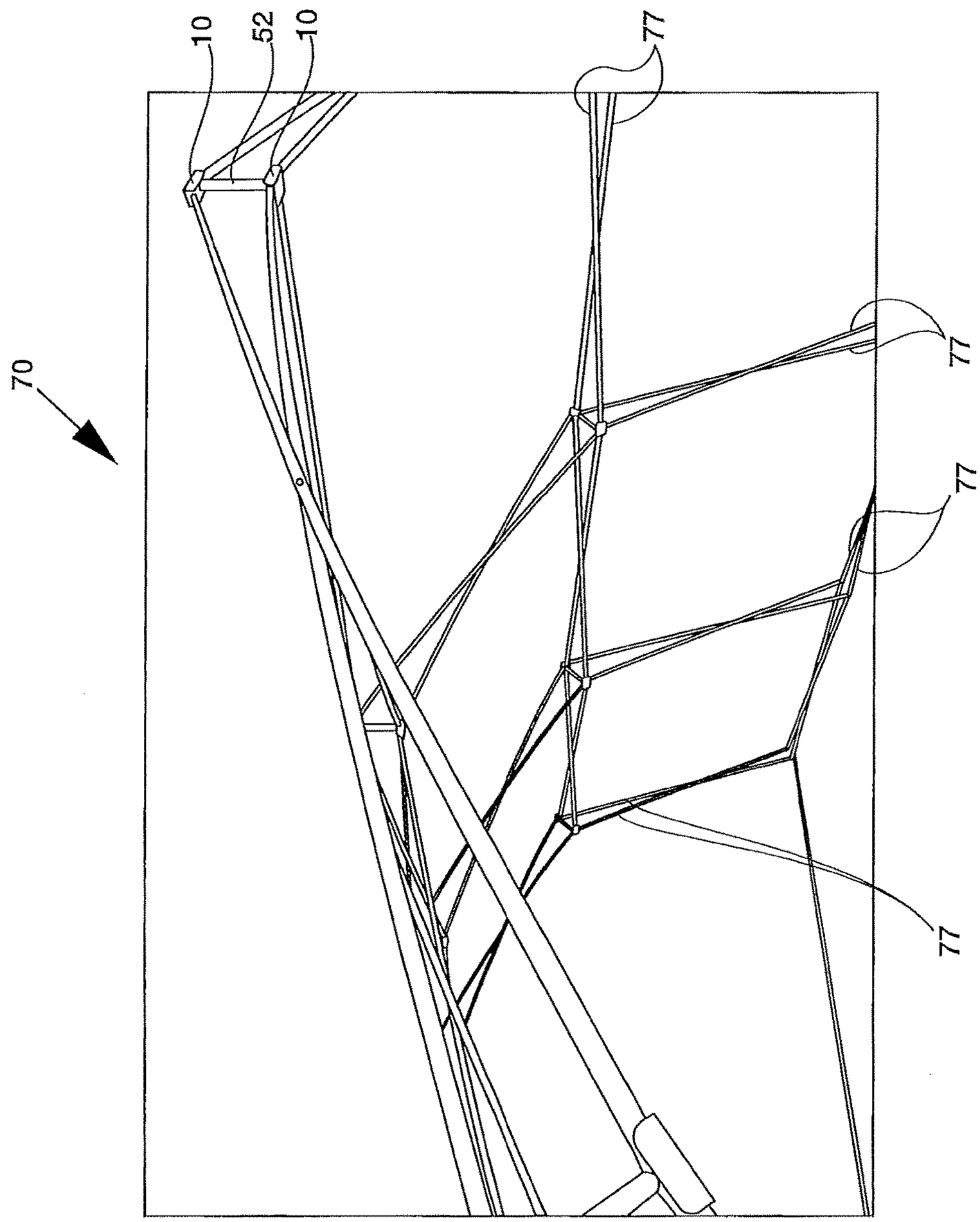

FIG. 13

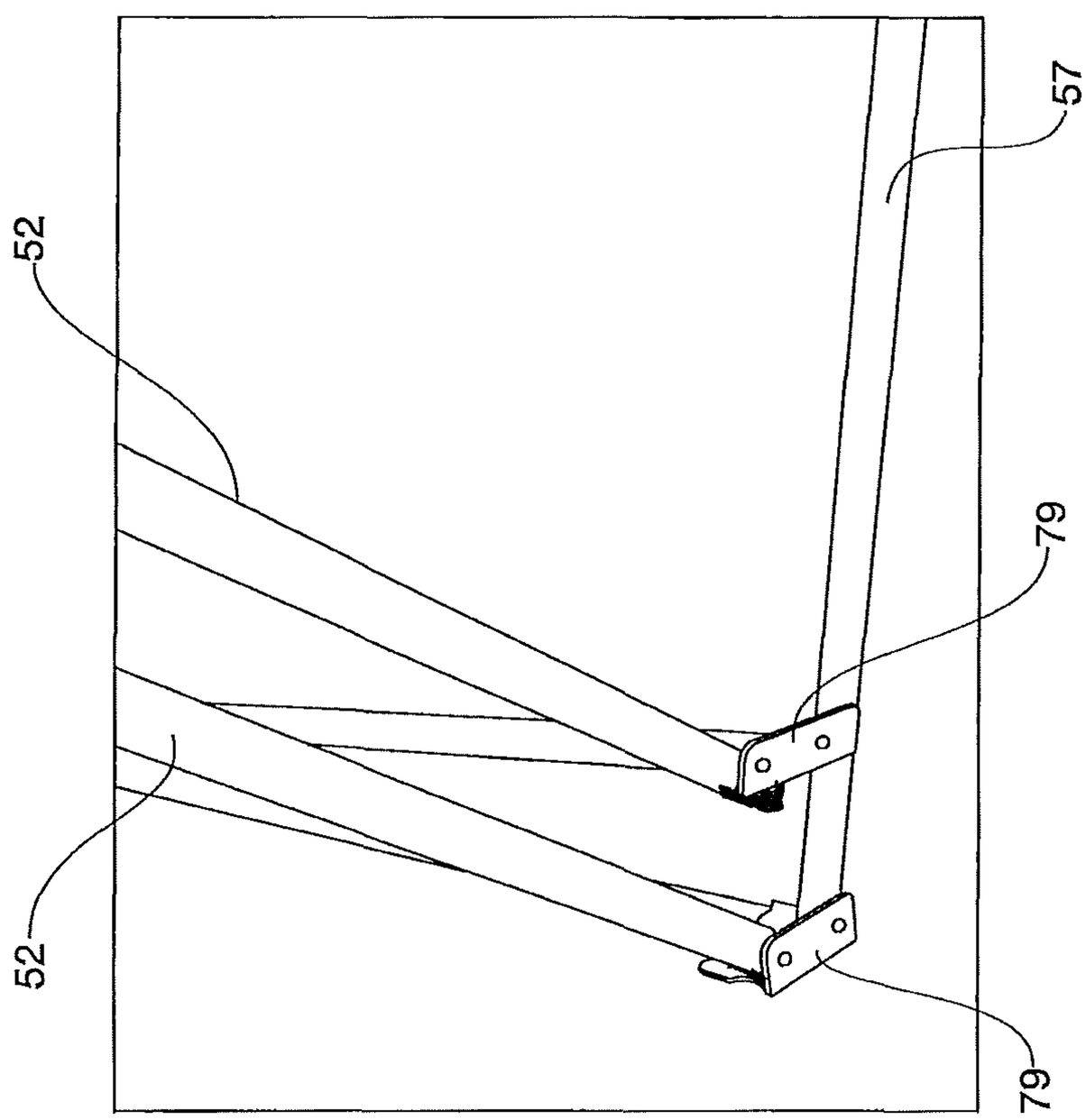

FIG. 14

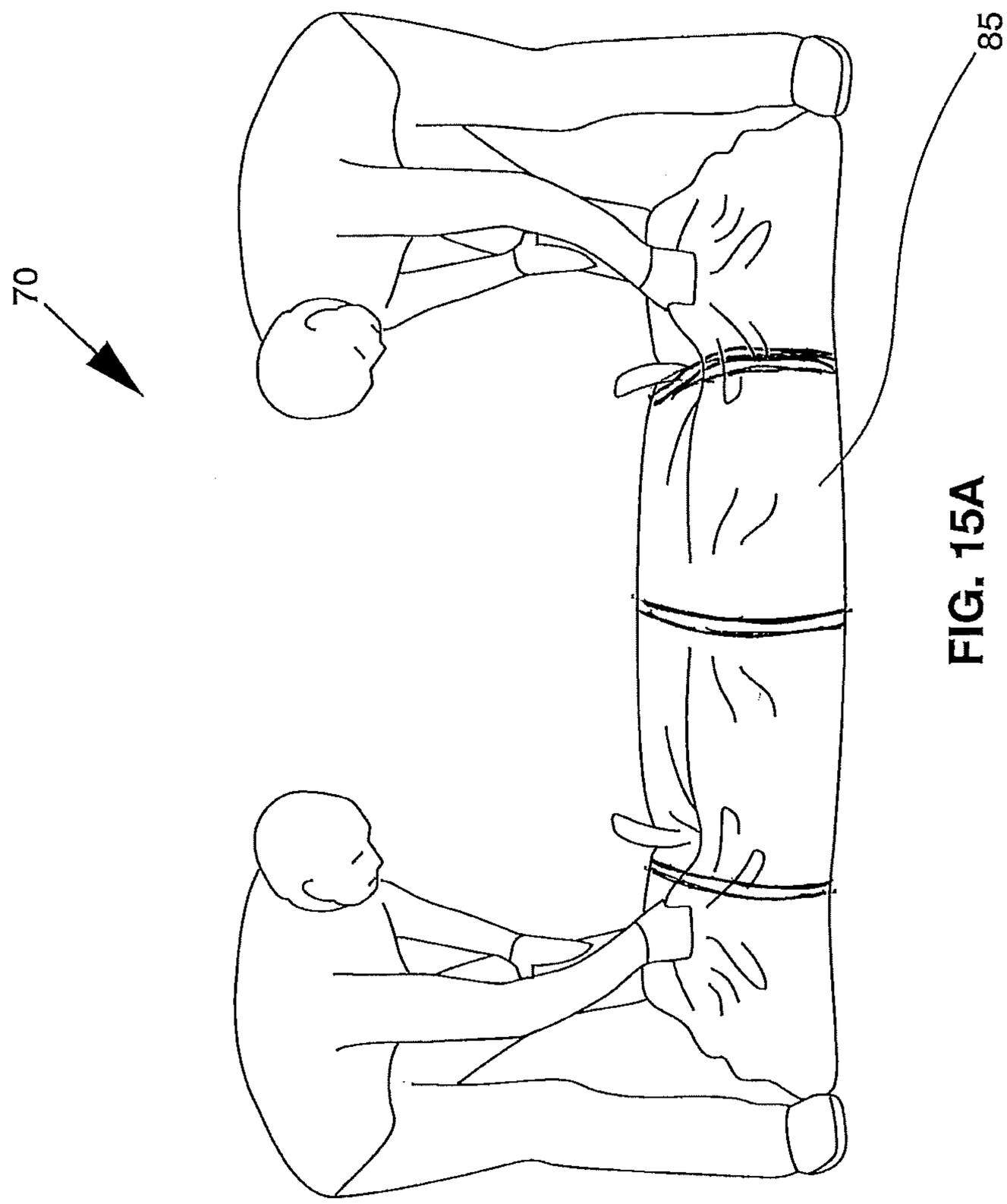

FIG. 15A

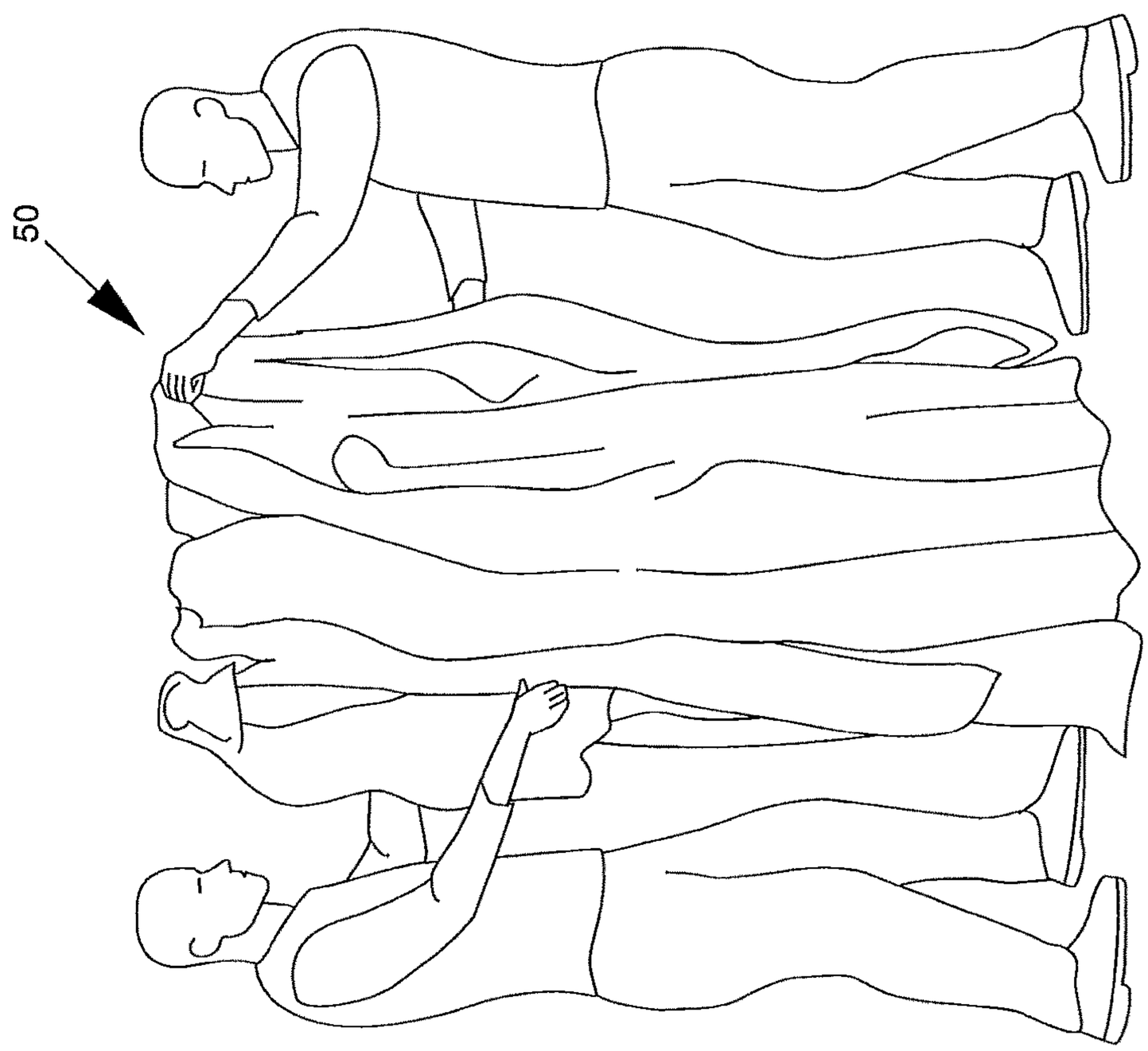

FIG. 15B

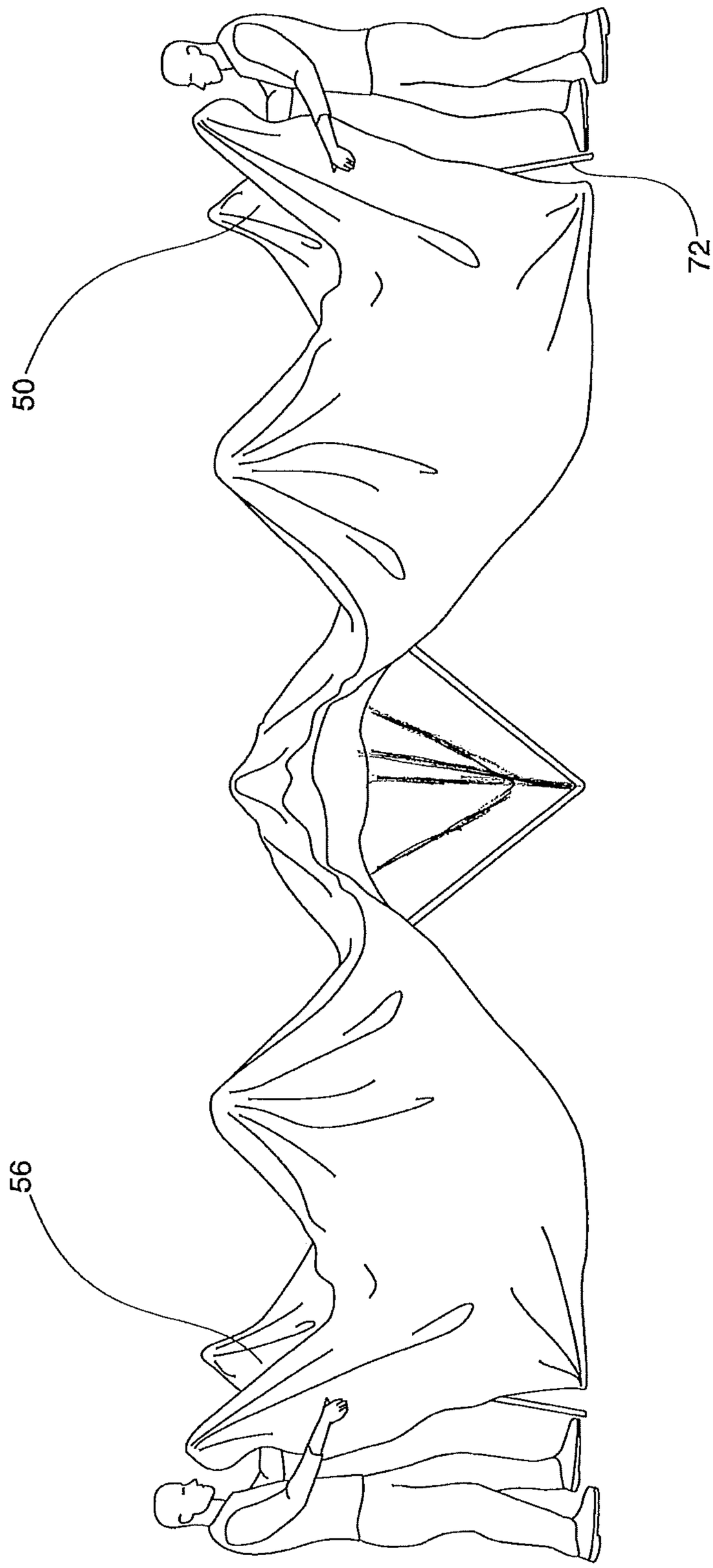

FIG. 15C

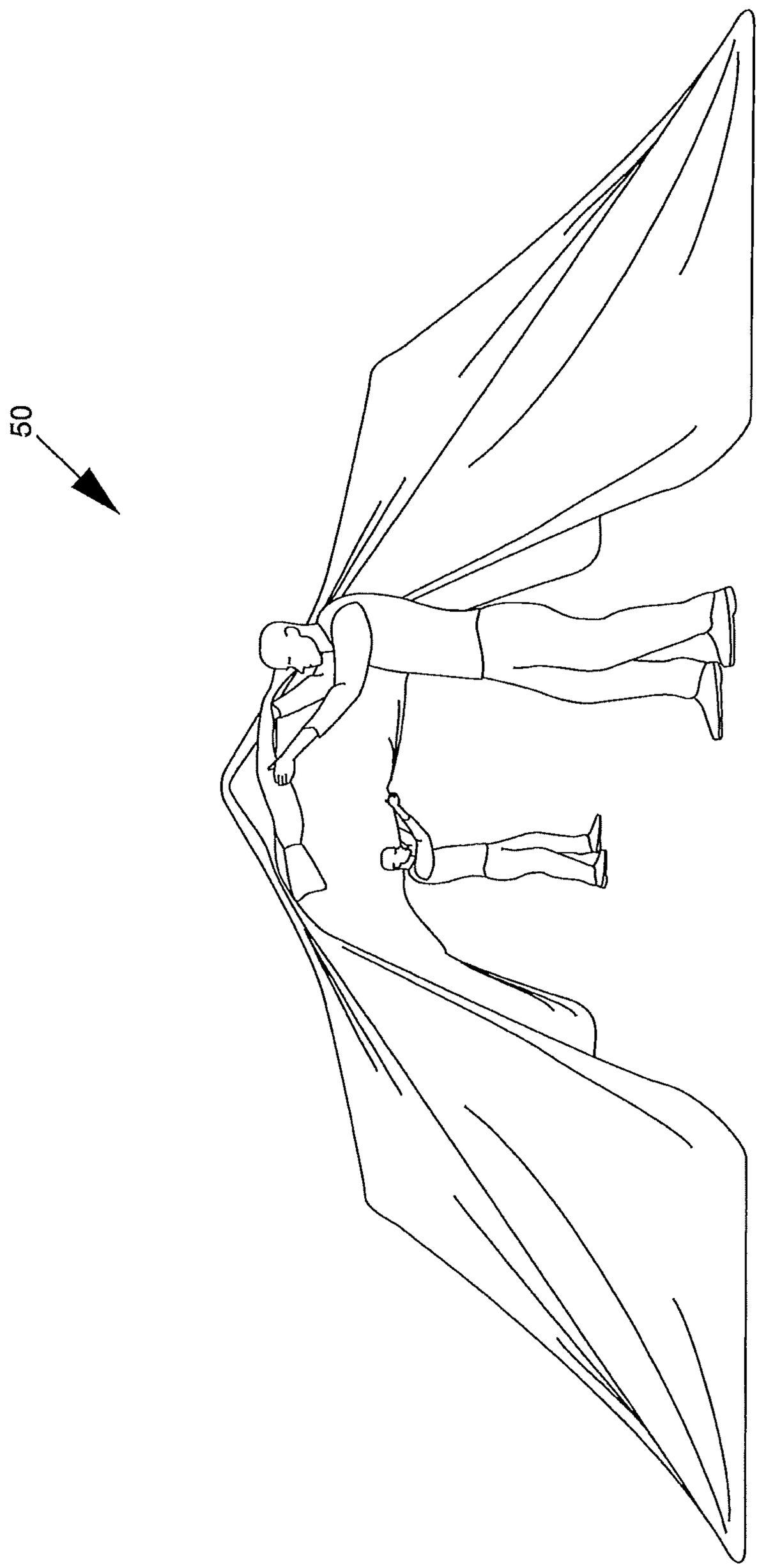

FIG. 15D

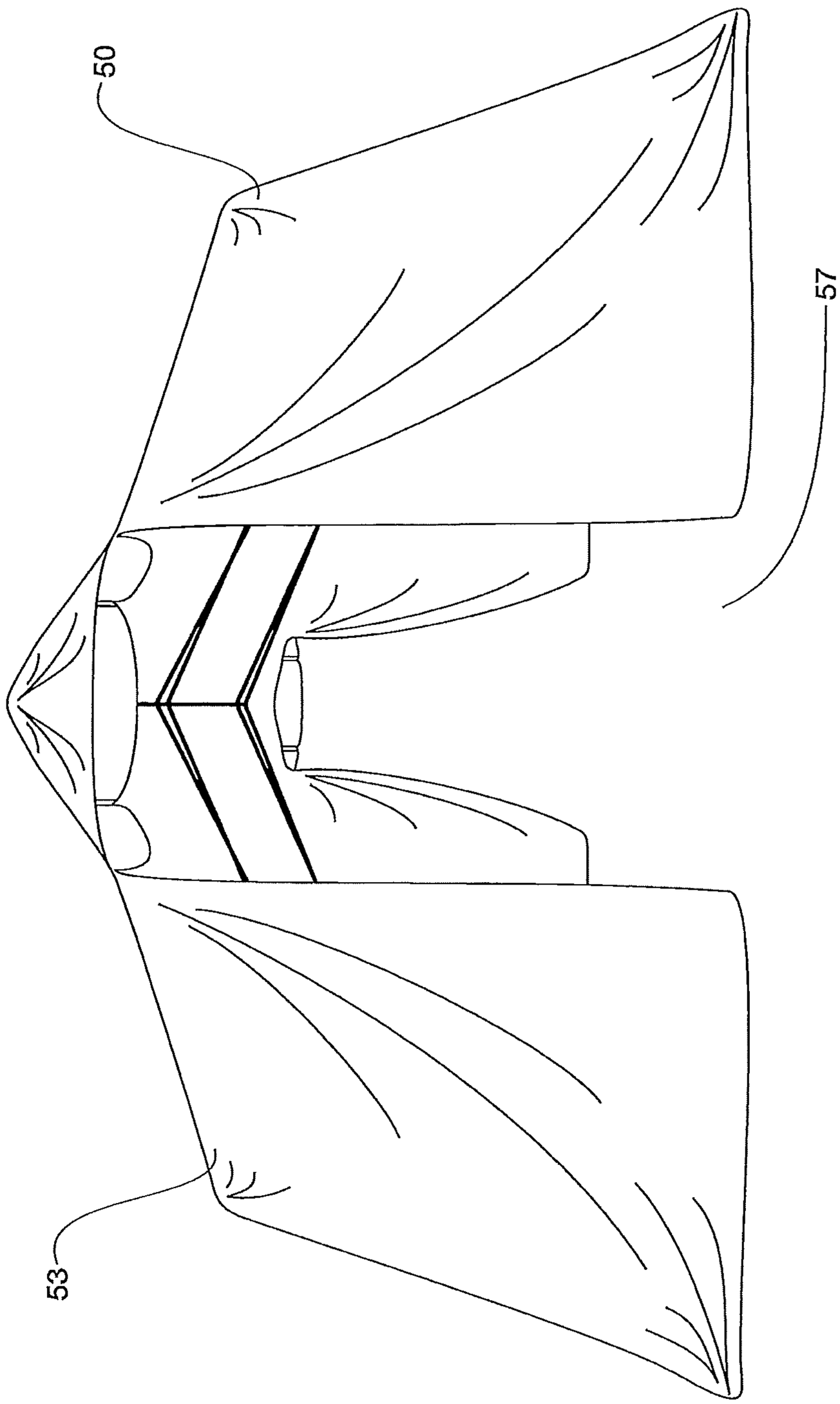

FIG. 15E

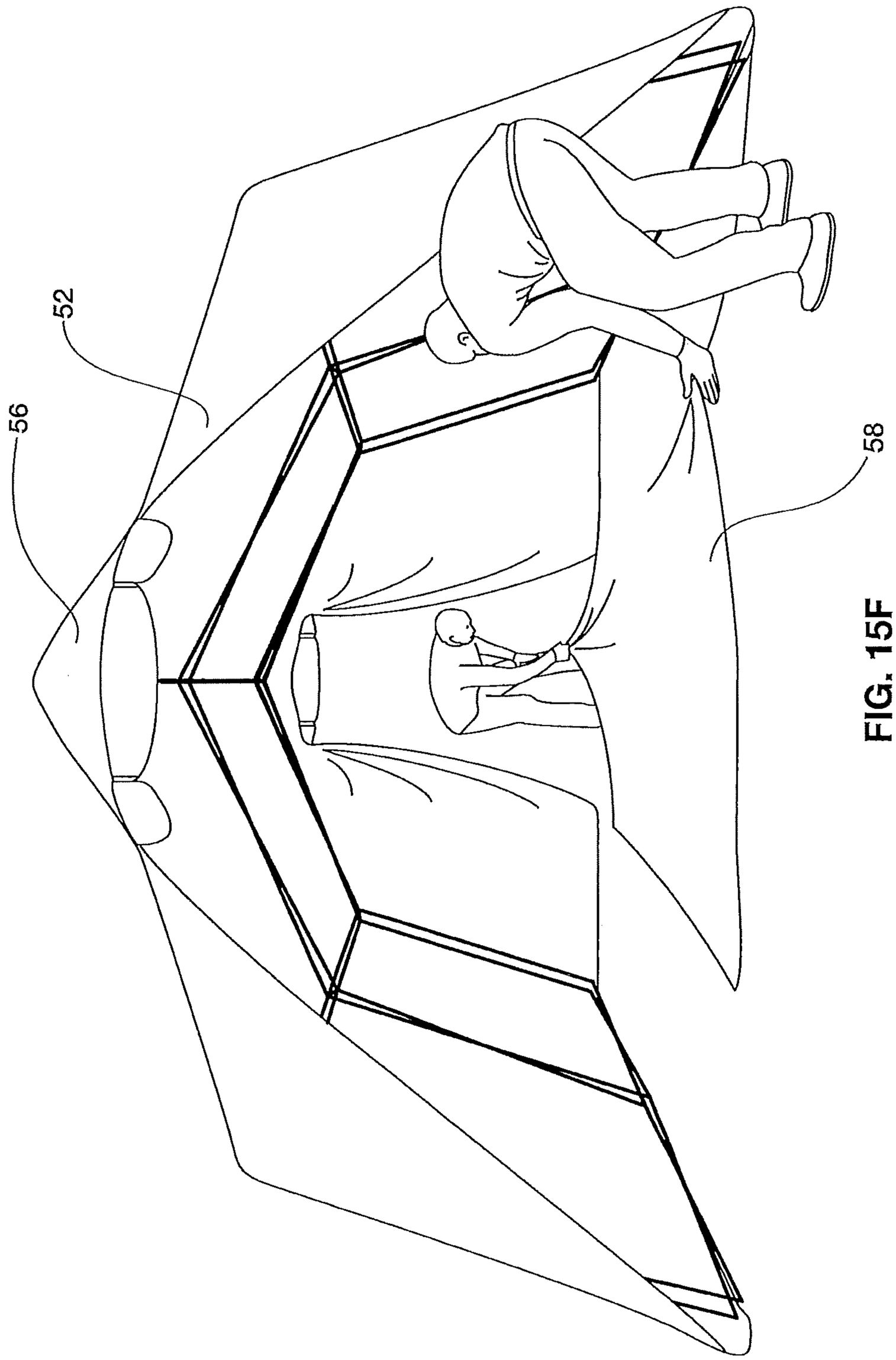

FIG. 15F

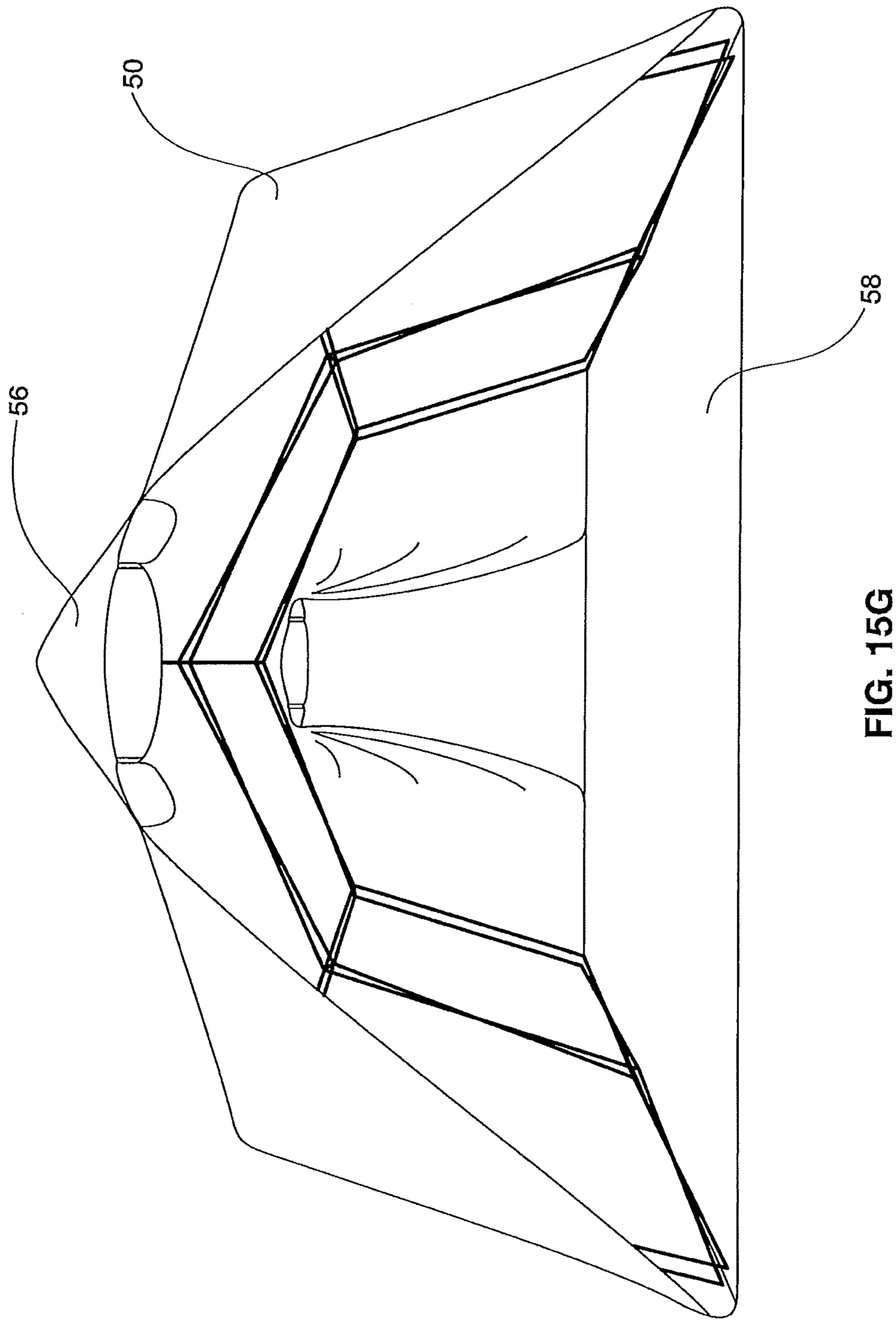

FIG. 15G

SHELTER AND HUB SYSTEM

FIELD OF THE TECHNOLOGY

The present disclosure relates generally to shelters and hub systems for shelters, and more particularly to an improved hub system, apparatus, kit and methods, for example, for deployable shelter assemblies.

BACKGROUND

Deployable shelters, tents, rapid-deployment shelters, forts and the like typically include sheets of fabric, or other materials, secured to a frame. Often these units are free-standing or are similarly semi-attached to a ground surface or tangential fixture. In some instances, guy ropes help anchor the unit to a ground surface once the shelter is assembled. Rapid deployment and assembly of such a shelter is often a difficult and demanding task, particularly during emergency situations and in uncertain environmental conditions.

For instance, rapid tactical shelters are used in a variety of demanding on-site scenarios including fire, incident command, communication areas, crime scene investigation, flu vaccination, military deployment and other on-site emergency response spots in a variety of challenging terrains, and environmental conditions. Rapid deployment, with quick and easy set-up and take-down of such units is often beneficial, if not necessary. Deployment situations may be, for example, in extreme heat or cold, during on-going emergencies and in remote locations, making ease of assembly extremely important and transportation of weighted items impractical. Durability of items in such terrain and environmental situations can also be a challenge. Incremental changes to weight, cost, ease of assembly and durability of deployable shelters and related shelter systems can result in large improvements in the field.

Therefore, Applicants desire improved systems, kits, assemblies, apparatus and methods for shelter and hub systems for deployment shelters and it is toward these and other challenges the present disclosure is directed.

SUMMARY

In accordance with the present disclosure, hub systems and improved shelter systems and assemblies are provided for deployment of shelters, forts deployment tents and the like. This disclosure provides an improved hub system that is convenient, efficient, easily portable, reliable, durable, and quick for the user, particularly when used in conjunction with other accessories often used in deployment shelters, for example HVAC, lighting, power cords, interior insulation, etc.

In one embodiment of the present disclosure, a hub for assembly of a shelter may include at least one receiver slot, a receiver sleeve, and at least one attachment point.

Other embodiments may be considered a hub for assembly of a rapid-deployment shelter. The hub may include, in some examples, a set of receiver slots, a receiver sleeve and a set of attachment projections. The receiver slot may include two parallel slot walls, a slot floor and a center slot wall. The receiver sleeve may be medially positioned to the receiver slots. The set of attachment projections may be rounded or may take on other shapes. The set of attachment projections may be attached at each end to a slot wall.

In some embodiments, a receiver sleeve may include an inner receiver and an outer receiver. The inner receiver and outer receiver may form a pressure lock system. The inner receiver and outer receiver walls may be angled. The angle may, for example, be between about 0.001 and 1 degrees, or is contemplated to also be more. In some examples, the taper may be at 0.5 degrees. The inner receiver may be angled inwardly from the floor. The outer receiver may be angled outwardly from the floor. In some examples, the taper of the angle of the outer receiver may be opposite that of the taper of the angle of the inner receiver.

Some examples of frame and hub assemblies include a set of hubs and a set of frame poles. In some examples, the frame and hub assembly may include variations of the hub, for example, partial hubs **79**, by way of example, for corners of the frame assembly (examples shown in FIG. **14**). Embodiments may include methods for assembly of the frame and hub assembly in which the frame poles are connected through the hubs. In some examples, a hub may be placed and oriented top down, bottom down and/or on a hub side to form the frame an hub assembly. There may be a portion of the hubs horizontally oriented in connecting the hubs and a portion of the hubs vertically oriented in the frame and hub assembly. There may be partial hubs **10/79** included in the frame and hub assembly. Partial hubs **10/79** may be specialized to accept frame poles in particular hard to fit positions, for example, in frame and hub assembly corners and/or long frame pole articulations.

In still other examples, the inventions of the present disclosure may be considered a frame for an emergency, rapid-deployment shelter system. The frame may include a set of hubs and a set of frame poles, a portion of the frame poles secured with a portion of the hubs to form a skeleton frame for a rapid-deployment shelter system.

Other embodiments may be considered a shelter system including a frame, a cover and at least one hub. The frame may include a plurality of interconnected frame poles. The frame poles may be configured to alternate between a first extended position and a second retracted position. The cover may be configured to mate with the frame and/or be secured to the frame. The hub may include a set of receiver slots, a receiver sleeve, and a set of attachment projections.

In other examples the inventions disclosed may be considered hub and shelter methods, for example a method for a hub, a method for a shelter system kit, a method for an improved shelter and a method for rapid deployment of a shelter according to the disclosure.

The above summary was intended to summarize certain embodiments of the present disclosure. Embodiments will be set forth in more detail in the figures and description of embodiments below. It will be apparent, however, that the description of embodiments is not intended to limit the inventions of the present disclosure, the scope of which should be properly determined by the appended claims.

BRIEF DESCRIPTION OF THE DRAWINGS

Embodiments of the disclosure will be better understood by a reading of the Description of Embodiments along with a review of the drawings, in which:

FIG. **1** is a side perspective view of one example of a hub for a deployment shelter according to an embodiment of the disclosure;

FIG. **2** is a front view of a one example of a deployment shelter with a hub system according to an embodiment of the disclosure;

FIG. **3** is a top view of one example of a hub according to the present disclosure;

FIG. **4** is a top view of one example of a hub according to the embodiment of FIG. **1**;

FIG. **5** is a side perspective view of one example of a pin and a washer element of the hub system;

FIG. **6** is another example of a bottom view of a hub according to the present disclosure;

FIG. **7** is a side perspective view of one example of a hub according to the embodiment of FIG. **1**;

FIG. **8** is a side perspective view of one example of a portion of a hub assembly of a hub system according to the present disclosure;

FIG. **9** is a perspective view of another example of a portion of a hub assembly of a hub system, according to the present disclosure;

FIG. **10** is a perspective view of one example of a frame and hub assembly of the rapid-deployment frame and shelter system, according to FIG. **2**;

FIG. **11** is a close-up view of one example of the frame and hub assembly according to FIG. **10**;

FIG. **12** is a close-up view of one example of a lower portion of the frame and hub assembly according to FIG. **10**;

FIG. **13** is another opposite side perspective view of one example of the frame and hub assembly according to FIG. **10**;

FIG. **14** is a close-up view of one example of a corner frame and hub assembly showing an example of a partial hub according to FIG. **10**; and

FIG. **15** A-G is perspective view of another example of a frame and hub assembly in a first deployed position and a second retracted position, according to the present disclosure.

DESCRIPTION OF EMBODIMENTS

In the following description, like reference characters designate like or corresponding parts throughout the several views. Also in the following description, it is to be understood that such terms as "forward," "rearward," "left," "right," "upwardly," "downwardly," and the like are words of convenience and are not to be construed as limiting terms.

Referring now to the drawings in general, it will be understood that the illustrations are for the purpose of describing embodiments of the disclosure and are not intended to limit the disclosure or any invention thereto. Collapsible shelters generally have a short lifespan as they expand and then collapse into a carryable form repetitively and generally are thrown about to experience a significant amount of wear and tear. These types of shelters are often thought of as readily replaceable and priced accordingly. Rapid deployment shelters, however, are much more significant purchases and are used under extreme conditions in emergency deployments, precarious weather situations, in remote locations and are expected for function seamlessly with higher expectations in repetitive deployments. Applicant realizes that durability, strength and weight associated with rapid deployment shelters are extreme challenges and can all be limiting factors. It is to these and other challenges that Applicant's improved hub and shelter system is directed.

FIG. **1** shows a side view of one example of a hub **10** for a shelter according to an embodiment of the disclosure. A hub **10** for assembly of a shelter may include at least one receiver slot **12**, a receiver sleeve **20**, and at least one attachment projection **30**. In some examples, at least a portion of the hub **10** is made of glass filled nylon and in other examples; the hub **10** may be entirely made of glass filled nylon. Applicant realized that formulating the hub **10** out of glass filled nylon, for example instead of the traditional metal, could give the hub slightly more flexibility than a metal hub, however, strength and durability were concerns. Applicant's hub **10** may exclude metal parts.

One or more hubs **10** may make up a hub system for a deployment shelter **50**, as seen in FIG. **2**. An articulating frame system of frame poles **52** may mate with, provide a skeleton frame for, a shelter cover. Shelter covers are often made of a fabric or canvas material that may be torn or ripped during contact with traditional frames, especially those with metal parts and assemblies. Applicant's hub reduces the chances of wear and tear on both the frame and the cover of the shelter. In many cases, when a shelter is expanded, a cover is required to be secured to the frame by way of an attachment strap with an attachment buckle that expands between the cover and the hub. The need for such attachment straps have been eliminated with Applicant's improved hub, in one example, by the hub pressure lock structure, described in more detail later. In some examples, however, attachment straps and/or buckles may be desired and are considered with the scope of the inventions of the disclosure.

Any of the shelters **50** shown or described herein may include a variety of field deployment elements. For instance, the shelter may be light weight for easy carry transport and may include an articulated frame, robust coverings, canopy **56** and canopy features, flooring **58**, floor liner, door openings **53**, lighting features, power features, electrical supply, lighting, liners, bedding, bunk bedding, tables, shelter identification tags, emergency response equipment, and additional water bladders, anchor weights, and sand bags. The shelters may be any size and multiple shelters may be joined through door openings to create scalable complexes with the advantages of the inventions herein. Particular shelter examples include, but are not limited thereto, a unit with floor space of about fifteen feet by twelve feet and an area of about one hundred and height square feet; a unit with floor space of fifteen feet by eighteen feet and an area of about two hundred and seventy feet; and a variety of other sizes.

In other embodiments, the disclosure includes a shelter kit. In this embodiment, the kit may comprise a shelter **50**, e.g. any of the shelters and/or shelter accessories shown or described, and a plurality of hubs **10**, e.g. any of the hub embodiments shown or described.

Other embodiments, seen throughout FIGS. **3-8**, may be considered a hub **10** for assembly of a rapid-deployment shelter **50**. The hub may include, in some examples, a set of receiver slots **12**, a receiver sleeve **20** and a set of attachment projections **30**. The receiver slot **12** may include slot walls **14**, a slot floor **16** and a center slot wall. The receiver sleeve **20** may be medially positioned to the receiver slots **12**. The set of attachment projections **30** may be rounded or may take on other shapes. The set of attachment projections **30** may be attached at each end to a slot wall **14**. In some examples, an attachment area **29** may be formed between two slots. The attachment area **29** may have one side forming a substantially right angle, formed by the intersection of two receiver slot walls. Opposite the attachment area side having a substantially right angle, the area **29** may include a rounded surface. An attachment projection **30** may be cornered between two receiver slots **12**.

The receiver slot **12** may include a first slot wall **14** and a second slot wall **14**, positioned such that the two slot walls are substantially parallel and each attached to a slot center wall and a slot floor **16**. In some examples, a slot wall **14** of one receiver slot **12** is substantially perpendicular to the slot wall **14** of an adjacent receiver slot **14**.

In some embodiments, receiver sleeve **20** may include an inner receiver **24** and an outer receiver **22** and a sleeve bottom **26**. The inner receiver **24** and outer receiver **22** may form a pressure lock system. The inner receiver **24** and outer receiver **22** walls may be angled. The angle may, for example, be between about 0.001 and 1 degrees, or is contemplated to also be more. The inner receiver **24** may be angled inwardly from the floor. The outer receiver **22** may be angled outwardly from the floor. The inner receiver **24** and outer receiver **22** walls may be angled away from each other at the top of the receiver **20** and toward each other toward the floor of receiver **20**. The angled inner receiver **24** wall and the angled outer receiver wall **22** may form a pressure lock system for accepting a frame pole **52**, for example and specifically a spacer pole **51**, and securing the pole with the hub **10**.

Attachment projections **30** may be attached on one end to a slot wall **14** that is perpendicular to the slot wall **14** attached to the other attachment projection end. Attachment projections may be curved, rounded or take on any other applicable shape. Many shelter accessories **60** (see FIG. **9**) are utilized with rapid deployment shelters, as previously discussed, and these items often need to be attached or secured with the shelter. Such items as HVAC components and insulation sheets can be heavy and place a large weight load on the shelter, especially the shelter frame, and there is traditionally not a good place to attach such items. Applicant's hub system includes attachment projections **30** and a pin system **80** that collectively simplify assembly of the shelter and also provide unique attachment options for accessory items and attachments, without compromising the frame and shelter integrity and without increasing shelter carry weight. Attachment projections **30** secure attachment objects to the frame securely so that the attachment objections do not move along the frame. In some examples, the rounded outer side of projections **30** presents a curved surface for contact with the shelter canopy and other accessory items, preventing wear and tearing that may occur with a non-rounded surface.

The attachment projections **30** are configured to allow shelter accessory **60** attachment with accessory attachments **62**.

The hub weight, in some examples, may be less than or equal to about 1.75 oz. The hub weight in other examples may be between about 1.25 oz. to about 1.75 oz. The hub may be at least about 4 mm thick. The hub may be at least about 5 mm thick in other examples. Applicant was able to realize a reduced hub weight of over 40% of that of conventional hubs, while increasing the strength and durability of the hub **10**.

In some embodiments, attachment projections **30** may be about 0.20 to about 0.260 inches in thickness. The attachment projections **30** may be at least 0.250 inches in thickness. The hub base, flooring between the slot walls **14**, may be substantially between 0.150 inches to about 0.200 inches in thickness. The hub base may be at least 0.200 inches in thickness in some examples.

Applicant conducted vertical break testing for the hub to simulate the weight that is often supported from a hanging position on attachment points for rapid deployment shelters by accessory and attachment items. Weight was applied to the hub in increments and increased until vertical break was detected. Applicant desired attachment points with low weight, ease of access, durability and strength. In some examples, hub **10** and the attachment projections **30** may have an average vertical break of above 125 lbs., 145 lbs. or 155 lbs. In some examples, the vertical break may be between about 145 lbs and about 170 lbs.

Applicant conducted lateral break testing to simulate the side pull that is may be withstood from a side load position. Again, Applicant desired attachment points with low weight, ease of access, durability and strength. Weight was again applied to the hub in increments until vertical break was detected. In some examples, the hub **10** and attachment projections **30** may have an average lateral break of above 150 lbs., 160 lbs., or 170 lbs. In some examples, the lateral break may be between 150 lbs. and about 200 lbs.

Other embodiments may be considered a shelter system **70** including a frame **72**, a cover/canopy **56** and at least one hub **10**. The frame **72** may include a plurality of interconnected frame poles **52**. The frame may include a connector **57**. The connector **57** may span between the front right and front left corners of the frame. The connector **57** may also span between the back left and back right corners of the frame. The connectors may be frame poles **52**, straps, elastic, nylon or any other suitable material. The connectors may stabilize the frame. The connectors may be a set of connectors joined end to end. The connectors may be frame base connectors. The frame poles **52** may be configured to alternate between a first extended position and a second retracted position. The retracted position may include just the frame poles **52** in a retracted position, the frame poles **52** and the hubs **10** in a retracted position, and/or the frame poles **52**, hubs **10** and the canopy **56** in a retracted position, assembled and/or unassembled for storage and transport. The entire shelter system may fully retract in a second position and fully expand without assembly into a first deployed position. The cover **56** may be configured to mate with the frame **72** and/or be secured to the frame or may be already mated with the frame. The hub **10** may include a set of receiver slots **12**, a receiver sleeve **20**, and a set of attachment projections **30**.

In some embodiments the pin system **80** may include a plurality of pins and matched washers. Applicant's pin system, as seen in FIGS. **5** and **7**, may fit through slot openings **17** on slot receiver walls **14** to secure in place attachments and/or frame poles **52**. Once a frame pole **52** is mated with a hub **10**, the pole **52** may be secured movably to the hub **10** with a pin system **80** with a washer **89** and pin **86**. Applicant's articulating frame poles **52** and configuration may include openings that accommodate and match with the openings **17** and the pin system **80**. By way of example, the pin **86** and washer **89** may be made of glass filled nylon able to remain durable and also light weight and easy to repeatedly remove and replace into position. In this example, the pin **86** is configured to slide through the hub and tubes of the frame and to mate with its mated washer that is configured to pop over the end of the pin to lock tight. Conventionally, metal pins with split rings have been utilized with shelters, with the split rings being difficult to remove and assemble quickly and extremely difficult to replace in the field. Applicant's pin system increases ease of assembly and removal, maintains strength and decreases weight load. Applicant's pin system is economical, durable and reduces the time for assembly and/or repair of the shelter system.

FIGS. **10-14** show examples of a shelter system including frame and hub assemblies **70**. A frame and hub assembly may include a set of hubs **10** and a set of frame poles **72**. In some examples, the frame and hub assembly may include variations of the hub, for example, partial hubs **63**, by way of example, for corners of the frame assembly. Embodiments may include methods for assembly of the frame and

hub assembly in which the frame poles are connected through the hubs. In some examples, a hub may be placed and oriented top down, bottom down and/or on a hub side (seen in FIG. **12**) to form the frame an hub assembly. There may be a portion of the hubs horizontally oriented in connecting the frame poles and a portion of the hubs vertically oriented in the frame and hub assembly. There may be partial hubs included in the frame and hub assembly. Partial hubs **63** may be specialized to accept frame poles in particular hard to fit positions, for example, in frame and hub assembly corners and/or long frame pole articulations.

In still other examples, the inventions of the present disclosure may be considered a shelter and frame for an emergency, rapid-deployment shelter system. The frame may include a set of hubs **10** and a set of frame poles **10**, at least a portion of the frame poles secured with a portion of the hubs to form a skeleton frame for a rapid-deployment shelter system. The shelter and frame for an emergency, rapid-deployment shelter system fully assembled and movable between a first deployed position and a second retractable position. In the retracted position, the canopy, **56**, frame poles **72** and hubs **10** may stay substantially attached with the frame poles **72** collapsing parallel and next to each other. The frame poles **72** may be internal poles, external poles and ceiling poles. Frame poles **72** may, for example, be in pairs **77**. The poles in pairs may be connected at about a center point and the poles may retract to be parallel in the same plane. The poles in pairs may be connected at about a center point and the poles may rotate about an axis A (FIG. **10**, **13**) at the connected point to diverge at their ends away from each other. The connected poles may diverge at an angle alpha. The angle alpha may be about 1 to less than 90 degree. The angle alpha may, by way of example, be about 5 to about 25 degrees.

As seen in FIG. **11**, the frame poles **52** may link with the hubs **10** to form frame **72**. Attachment projections **30** are configured to accept attachment items.

FIG. **12** shows a vertically aligned hub **10**. Vertically aligned hubs **10** within the frame **72** may, as shown in FIG. **12**, configure a space into the frame system and act as a spacer between two surfaces. The lower frame poles **52** in this example connect with a receiver slot **12** on a hub, thus the hub acting as a spacer to maintain a space between at least a portion of the lower frame poles **52** and the ground. In this instance, the space **73** is beneficial and allows portions of the canopy to wrap under the frame **70**, and in some examples, without supporting weight.

FIGS. **15**A-G show a shelter system **70** in a retracted position (FIG. **15**A). The shelter system may include a case **85**. The case **85** may be a tough and durable material, for example, a vinyl material. The shelter may be encased in the cover for transport and storage. In use, the case is removed and a liner may be included. In this example, the liner is removed. The shelter legs are bunched together in a substantially parallel position in the retracted position (FIG. **15**B). A user may determine the door ends and the wall ends of the retracted shelter. A door end will typically have at least 5 legs and the wall ends of the shelter typically have less than 5 legs. The shelter may be staged in its desired location. Expansion bars may be located within the frame, for example, top center bars of each wall, to be grasped and pulled apart, away from the retracted shelter on each wall end. The shelter may best, by way of example, move into the deployed position by raising the shelter slightly off the ground as the expansion bars are pulled outwardly as the articulating frame expands (FIG. **15**C). The user lifts at the center point of each door end at the front and back of the shelter and the frame lifts into place, self-standing and fully deployed (FIG. **15**D, **15**G). A floor liner may be added to the shelter or may be included (FIG. **15**F). The floor may be aligned to meet the shelter canopy sides and ends. An insulation liner may be attached at the projections **30**. Other accessory items may be added to the system **70**, by way of example, there may be an HVAC access panel in the canopy at which point an HVAC duct is placed and secured in order to attach to an HVAC system. In other examples, lighting, power, and supplies may also be added to the shelter system.

In other examples the inventions disclosed may be considered hub and shelter methods, for example a method for a hub, a method for a shelter system kit, a method for an improved shelter and a method for rapid deployment of a shelter according to the disclosure.

In yet another embodiment of the disclosure, included is a method for assembling a collapsed shelter **10** and securing the shelter **10** with a hub system according to any of the examples disclosed. In one example, the method may include carrying the shelter **10** collapsed, separating and/or unfolding the walls **12**, expanding the shelter **10**, aligning the frame of the shelter with a hub system to secure the shelter, e.g. including any of the embodiments previously shown or described. The method may also include attaching accessory items to an attachment projection **30** of a hub **10**.

Portability of the shelter allows any of the shelter embodiments and examples shown and described herein to be transported to remote and difficult to reach locations, for instance because the hub and shelter components are lightweight to carry and collapsible. Often, in rapid deployment situations, shelters may be quickly set-up in a variety of environments, quickly taken-down and remain easily mobile.

Those of ordinary skill in the art having the benefit of this disclosure will recognize that any of the shelters and hub system described herein includes a variety of sizes, shapes, styles and support materials, all of which are considered within the scope of this disclosure.

Numerous characteristics and advantages have been set forth in the foregoing description, together with details of structure and function. Many of the novel features are pointed out in the appended claims. The disclosure, however, is illustrative only, and changes may be made in detail, especially in matters of shape, size, and arrangement of parts, within the principle of the disclosure, to the full extent indicated by the broad general meaning of the terms in which the general claims are expressed. It is further noted that, as used in this application, the singular forms "a," "an," and "the" include plural referents unless expressly and unequivocally limited to one referent.

We claim:

1. A hub for assembly of a rapid-deployment shelter, said hub comprising:

a. a set of receiver slots, each receiver slot including:
   i. two parallel slot walls
   ii. a slot floor
   iii. a center slot wall;

b. a receiver sleeve medially positioned to the receiver slots, said receiver sleeve including
   i. an inner receiver sleeve,
   ii. an outer receiver sleeve,
   iii. a sleeve bottom;

c. a set of attachment projections, said attachment projections each having two ends being attached to the slot walls of said adjacent receiver slots, and

d. a pressure lock system, wherein said outer receiver sleeve is angled outward from the sleeve bottom, and

the inner receiver sleeve is angled inward from the sleeve bottom from, wherein the angled inner receiver sleeve and the angled outer receiver sleeve form the pressure lock system for accepting a frame pole therein and securing the frame pole with the hub.

2. The hub of claim **1**, wherein one of the slot walls of one receiver slot is substantially perpendicular to one of the slot walls of said adjacent receiver slot.

3. The hub of claim **2**, wherein the attachment projections are attached on one end to one of the slot walls that is perpendicular to the slot wall attached to the other attachment projection end.

4. The hub of claim **3**, wherein said attachment projections are curved.

5. The hub of claim **1**, wherein at least a portion of said hub is made of glass filled nylon.

6. The hub of claim **5**, wherein said hub excludes metal.

7. The hub of claim **5**, wherein a hub weight is less than or equal to about 1.75 oz.

8. The hub of claim **5**, wherein said hub weight is between about 1.25 oz to about 1.75 oz.

9. The hub of claim **8**, wherein said attachment projections have an average vertical break of above 125 lbs.

10. The hub of claim **8**, wherein said attachment projections have an average lateral break of above 150 lbs.

11. The hub of claim **9**, wherein said hub walls are at least about 4 mm thick.

12. The hub of claim **9**, wherein said hub walls are at least about 5 mm thick.

13. The hub of claim **2** including a pin system.

14. The hub of claim **13** wherein said pin system includes a pin and washer for securing frame poles to the hub.

15. The hub of claim **14** wherein said pin and washer are made of glass filled nylon.

* * * * *