US011806209B2

(12) **United States Patent**
Watson

(10) **Patent No.: US 11,806,209 B2**
(45) **Date of Patent: *Nov. 7, 2023**

(54) **FIXATION BASE AND GUIDES FOR DENTAL PROSTHESIS INSTALLATION**

(71) Applicant: **Jason Watson**, La Canada, CA (US)

(72) Inventor: **Jason Watson**, La Canada, CA (US)

(73) Assignee: **Watson Guide IP LLC**, Pasadena, CA (US)

(*) Notice: Subject to any disclaimer, the term of this patent is extended or adjusted under 35 U.S.C. 154(b) by 11 days.

This patent is subject to a terminal disclaimer.

(21) Appl. No.: **17/503,359**

(22) Filed: **Oct. 18, 2021**

(65) **Prior Publication Data**

US 2022/0031431 A1 Feb. 3, 2022

Related U.S. Application Data

(63) Continuation of application No. 15/984,309, filed on May 18, 2018, now Pat. No. 11,173,016.
(Continued)

(51) **Int. Cl.**
A61C 8/00 (2006.01)
A61C 13/225 (2006.01)
(Continued)

(52) **U.S. Cl.**
CPC ***A61C 8/0053*** (2013.01); ***A61C 1/084*** (2013.01); ***A61C 8/0048*** (2013.01);
(Continued)

(58) **Field of Classification Search**
CPC ... A61C 8/0053; A61C 8/0048; A61C 8/0068; A61C 8/0087; A61C 8/0095;
(Continued)

(56) **References Cited**

U.S. PATENT DOCUMENTS

5,320,529 A * 6/1994 Pompa A61C 3/02 433/76
11,173,016 B2 * 11/2021 Watson A61C 8/0068
(Continued)

OTHER PUBLICATIONS

Alzoubi et al., Bone Reduction to Facilitate Immediated Implant Placement and Loading Using CAD/CAM Surgical Guides for Patients with Terminal Dentition, Journal of Oral Implantology, Jun. 2016.

(Continued)

Primary Examiner — Ralph A Lewis
Assistant Examiner — Mirayda A Aponte
(74) *Attorney, Agent, or Firm* — James A. Italia; Italia IP

(57) **ABSTRACT**

Apparatus and method for installing a multi-tooth dental prosthesis in one session are shown and described. A first tool attaches to the jawbone, and serves as a foundation for subsequently used guides. Existing teeth and dental fixtures are removed, and the bone tissue is removed to accommodate the prosthesis. Subsequently, a drill guide is used to drill implant holes. An abutment guide is then used to place abutments. Copings are then installed. Next, the prosthesis may be installed and cemented to the copings. A resinous filler material may be applied to fill gaps and holes in and between the copings and the prosthesis, and is sanded smooth.

17 Claims, 19 Drawing Sheets

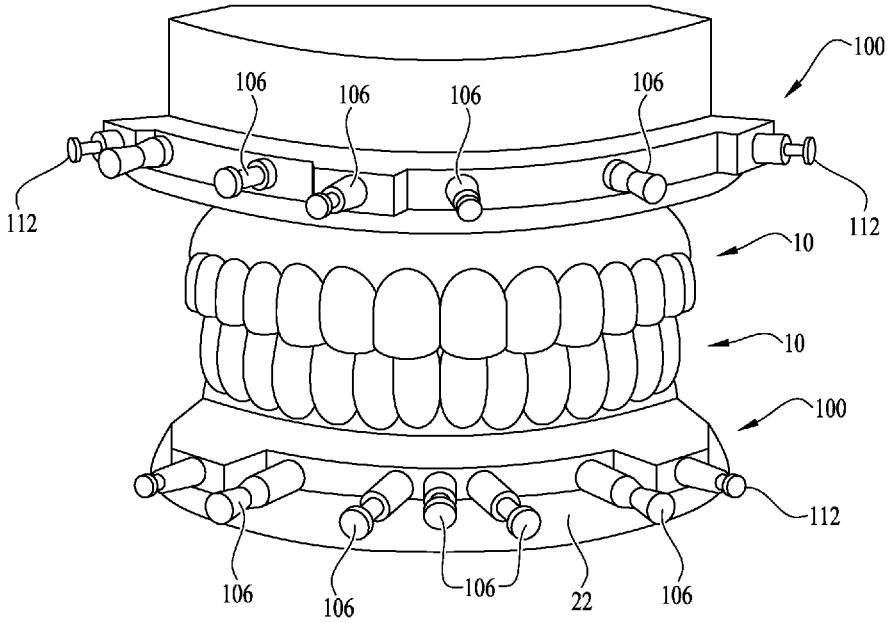

Related U.S. Application Data

(60) Provisional application No. 62/508,377, filed on May 18, 2017.

(51) **Int. Cl.**

A61C 1/08	(2006.01)
A61C 13/00	(2006.01)
A61C 13/07	(2006.01)
A61C 3/02	(2006.01)

(52) **U.S. Cl.**

CPC ***A61C 8/0068*** (2013.01); ***A61C 8/0087*** (2013.01); ***A61C 8/0095*** (2013.01); ***A61C 13/225*** (2013.01); *A61C 3/02* (2013.01); *A61C 8/0051* (2013.01); *A61C 8/0074* (2013.01); *A61C 8/0089* (2013.01); *A61C 13/0004* (2013.01); *A61C 13/0006* (2013.01); *A61C 13/0025* (2013.01)

(58) **Field of Classification Search**

CPC ... A61C 8/0051; A61C 8/0074; A61C 8/0089; A61C 8/005; A61C 8/0093; A61C 1/084; A61C 1/082; A61C 1/08; A61C 3/02; A61C 13/0004; A61C 13/0006; A61C 13/0025; A61C 13/0003; A61C 13/0001; A61C 13/00

USPC 433/173–176, 201.1, 72

See application file for complete search history.

(56) **References Cited**

U.S. PATENT DOCUMENTS

2015/0010881	A1*	1/2015	Llop	A61C 8/0089 433/215
2017/0252126	A1*	9/2017	Llop	A61C 8/0034

OTHER PUBLICATIONS

Scherer et al., All-on-4® nSequence® Implant Surgical Technique Using Zest Chairside® Attachment Processing Material, nSequence, https://www.youtube.com/watch?v=VOWRdFpfnGl, Oct. 2015.

Ibur Biosystems, Surgical Guide Options, http://www.iburbiosystems.com/wp-content/uploads/2014/12/Surgical-Guide-Options.pdf, Mar. 2016.

Harris et al., Creation of a 3-Dimensional Virtual Dental Patient for Computer-Guided Surgery and CAD-CAM Interim Complete Removable and Fixed Dental Prosthesis: A Clinical Report, The Journal of Prosthetic Dentistry, Feb. 2017, vol. 117, Issue 2, pp. 197-204.

Pikos, Full Arch Guided Implant Surgery—Same Day Teeth Surgical Instruction Course All on 4, https://www.youtube.com/watch?v=e-MD8Q8uJkc, Pikos Institute, Mar. 2014.

Office Action, U.S. Appl. No. 15/984,309, filed Mar. 19, 2020.

* cited by examiner

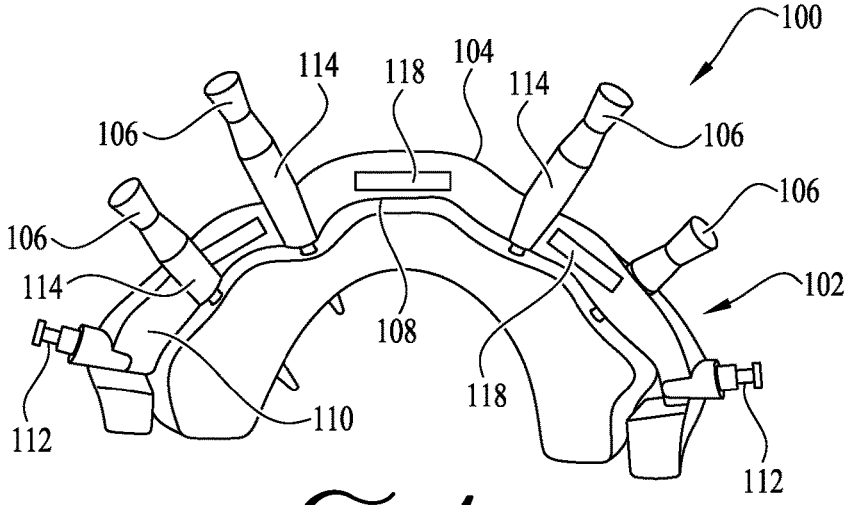

FIG. 1

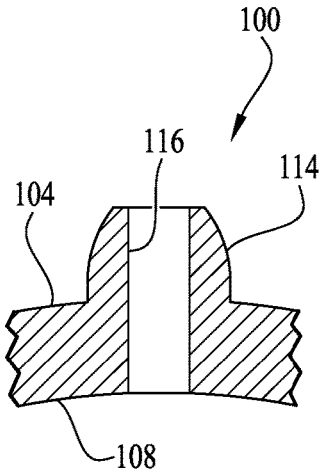

FIG. 3

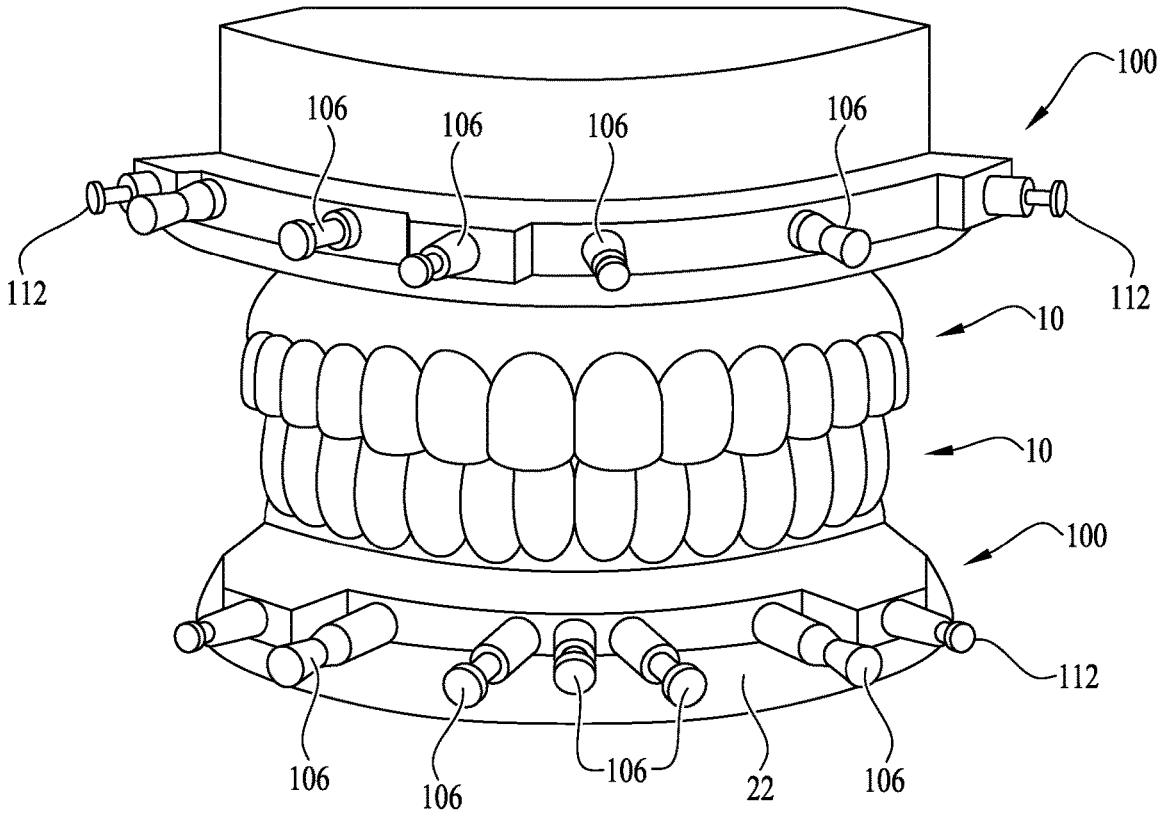

FIG. 2

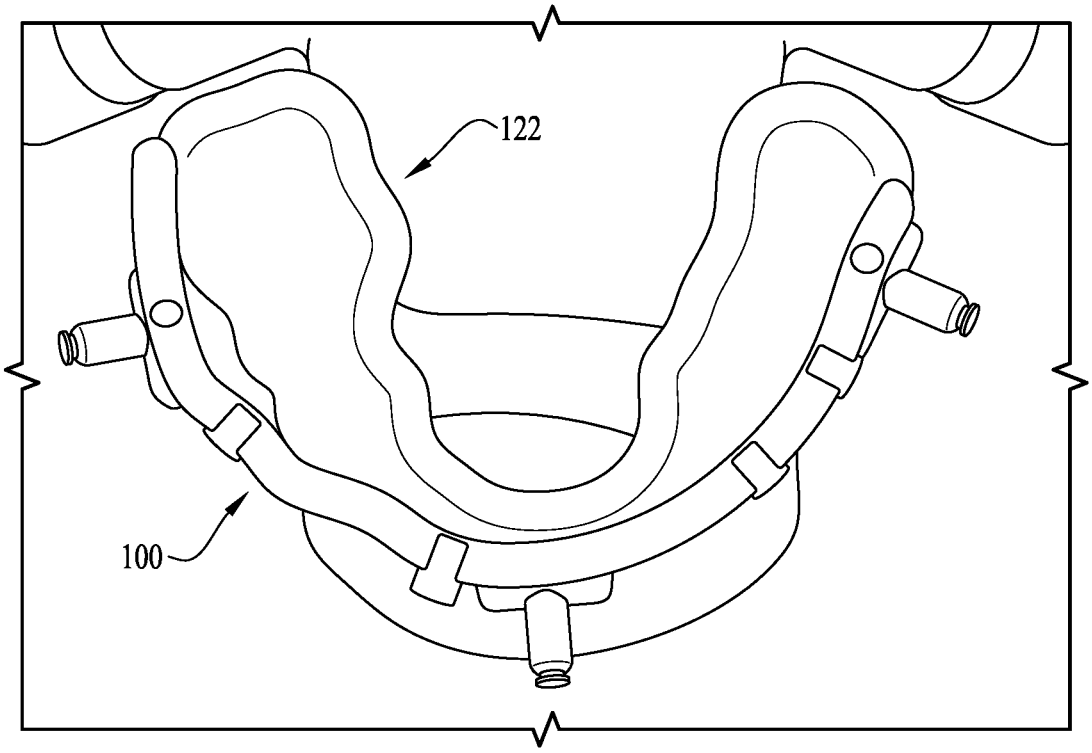
122
100

FIG. 4

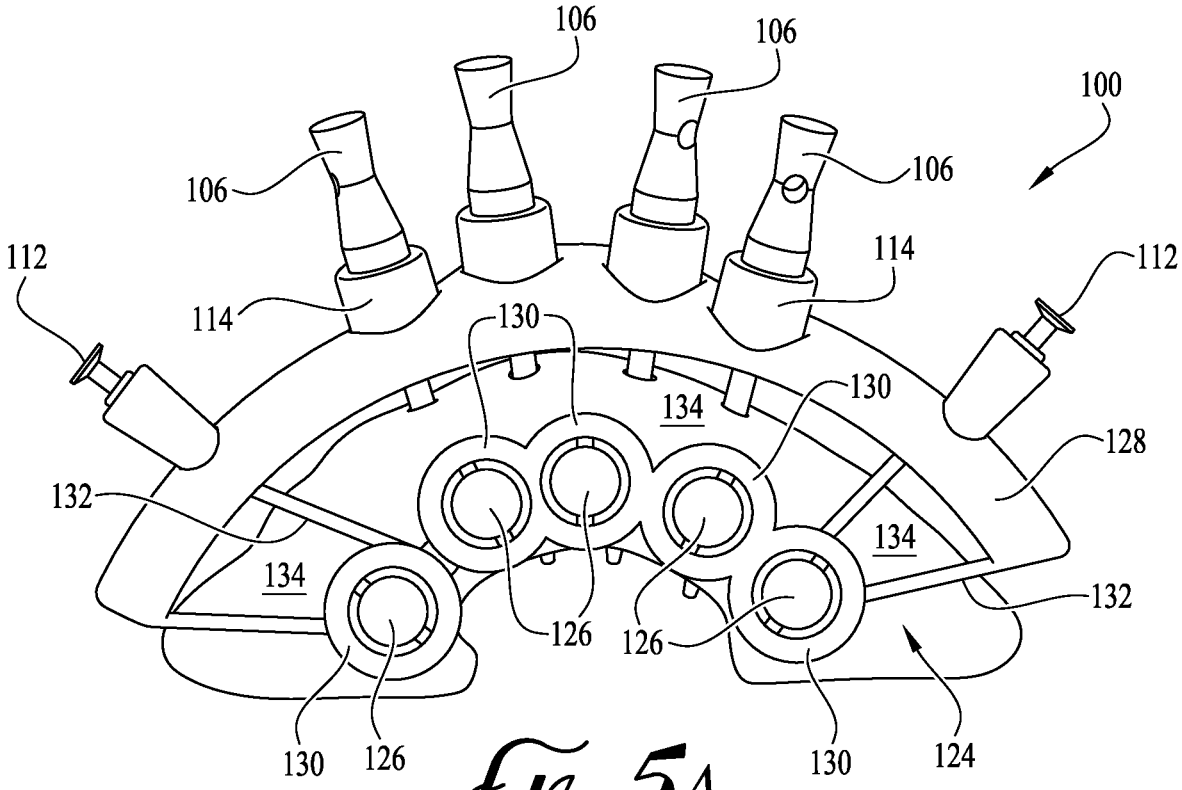
106
106
100
106
106
112
114
114
112
130
130
134
128
132
134
134
132
126
126
130
126
130
124

FIG. 5A

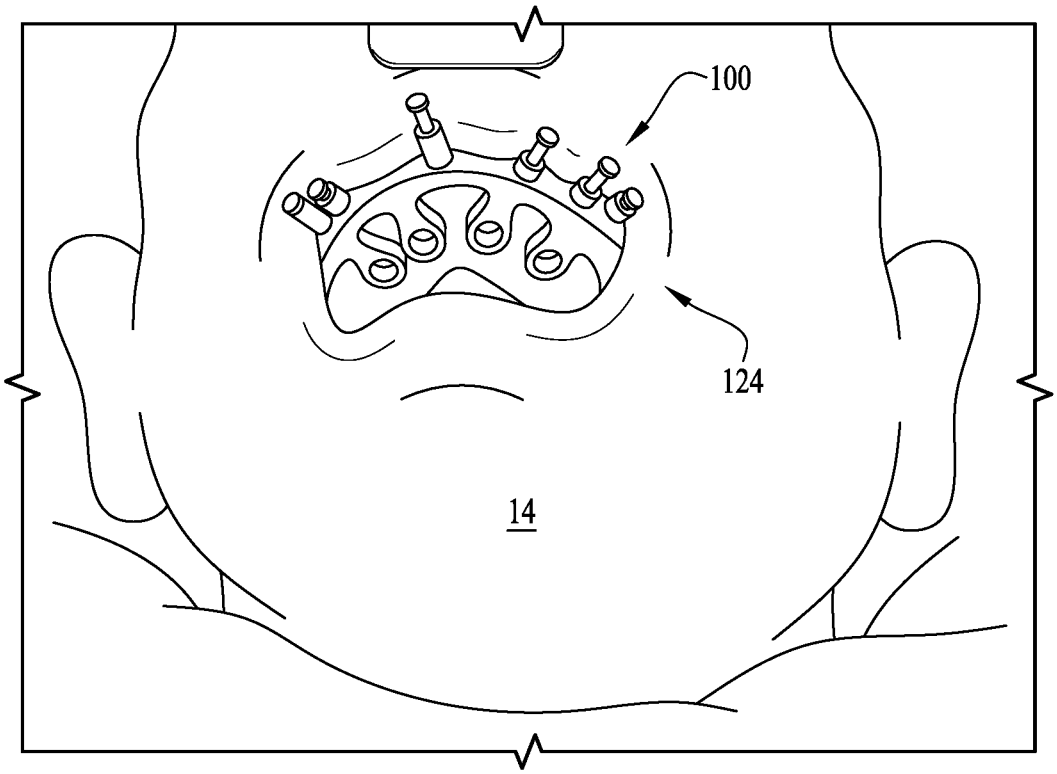

FIG. 5B

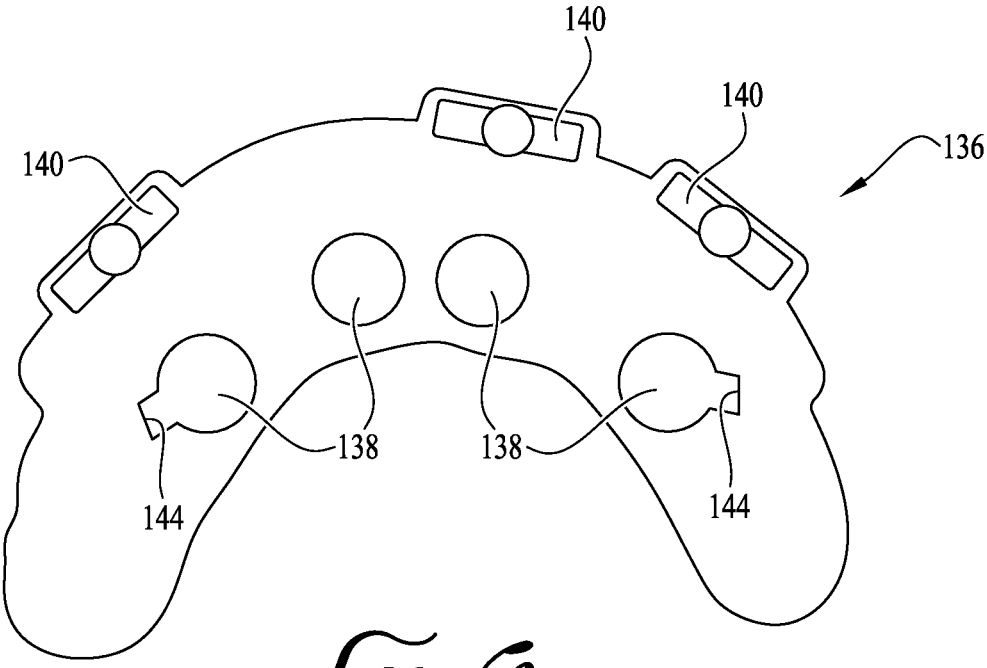

FIG. 6

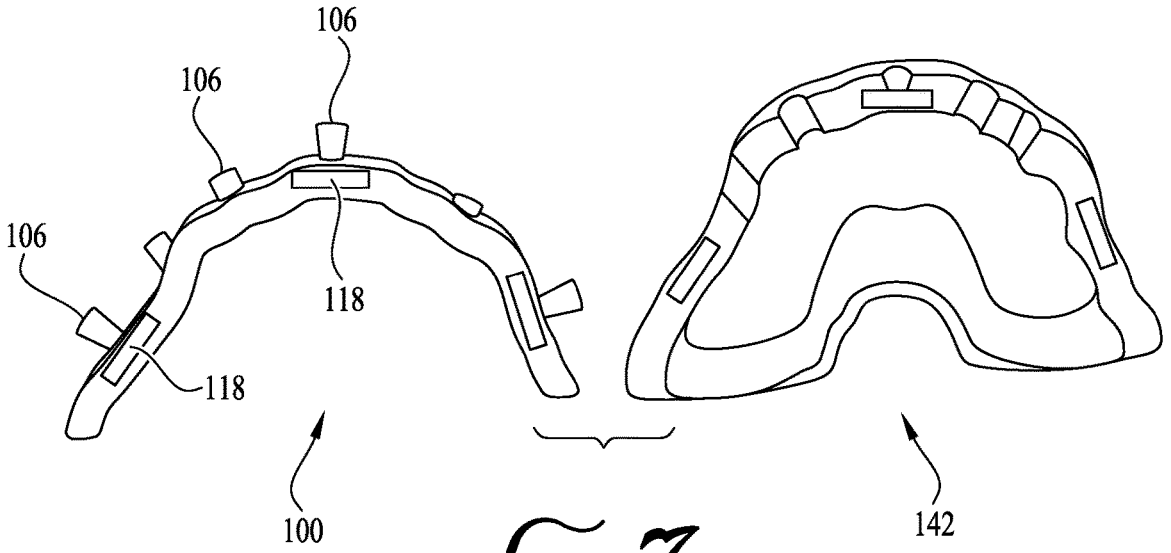

FIG. 7

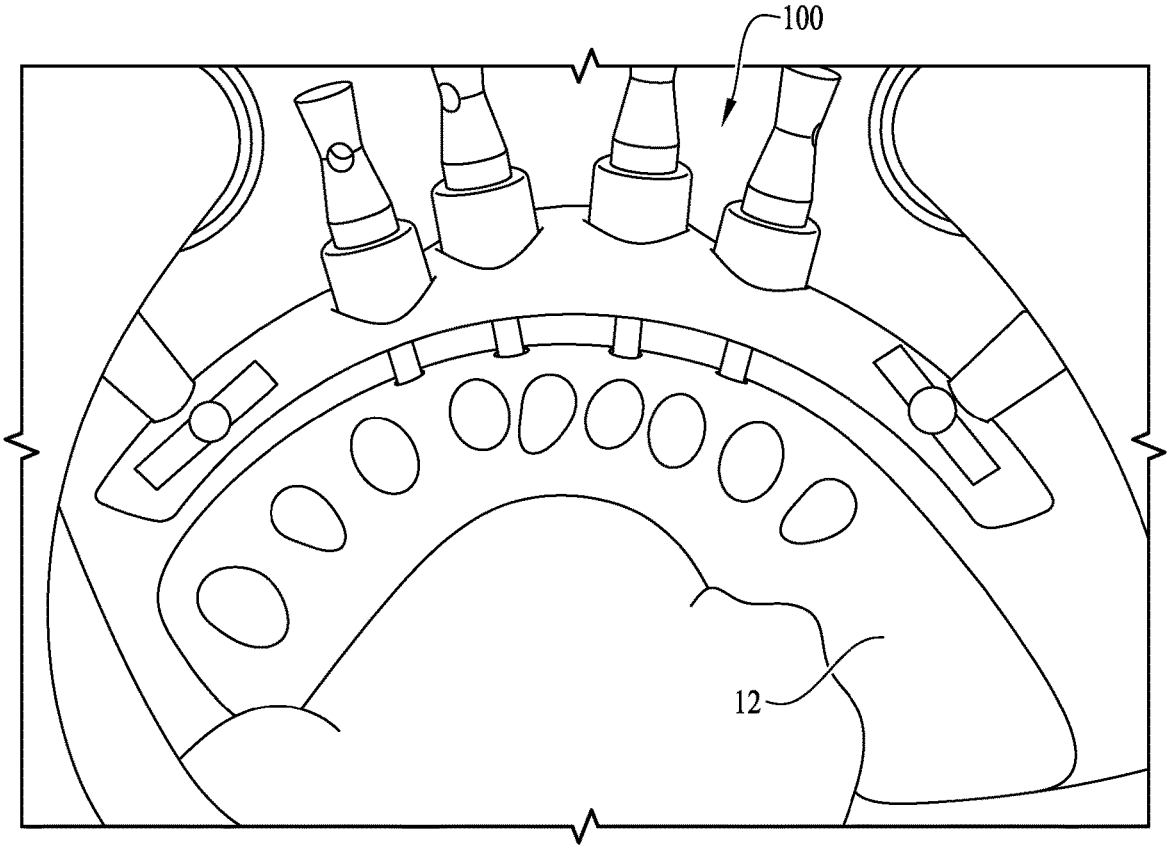

FIG. 8

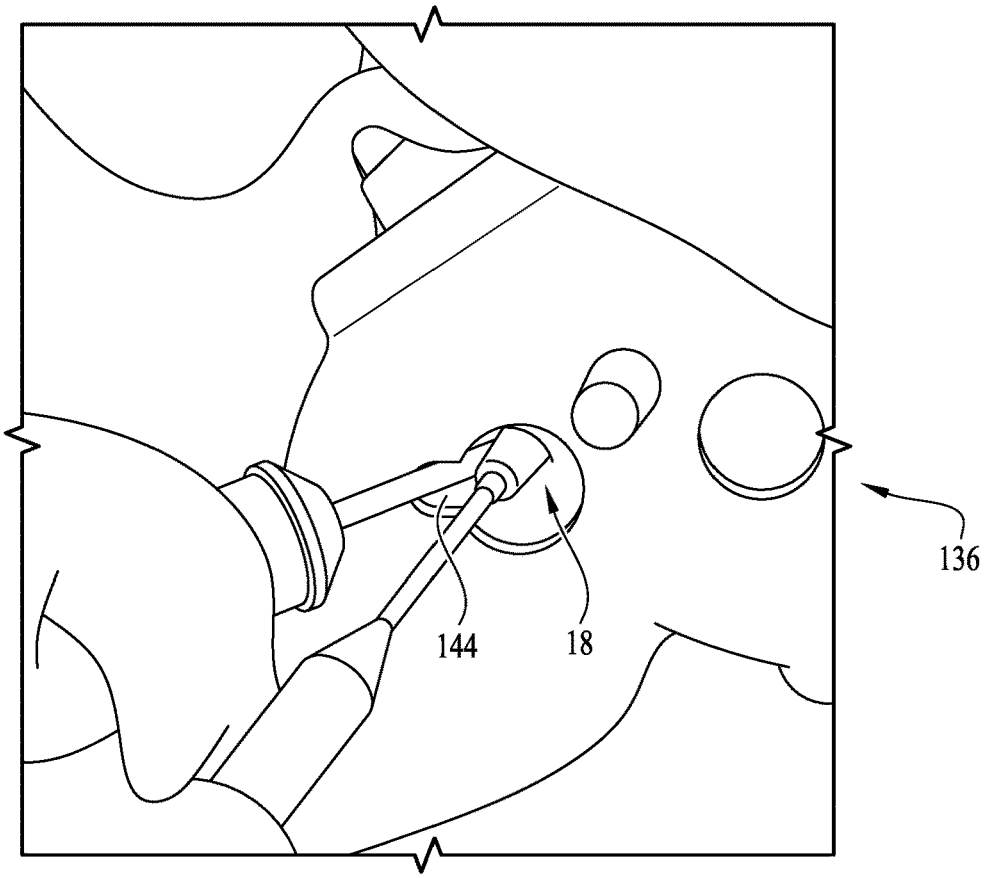

FIG. 9

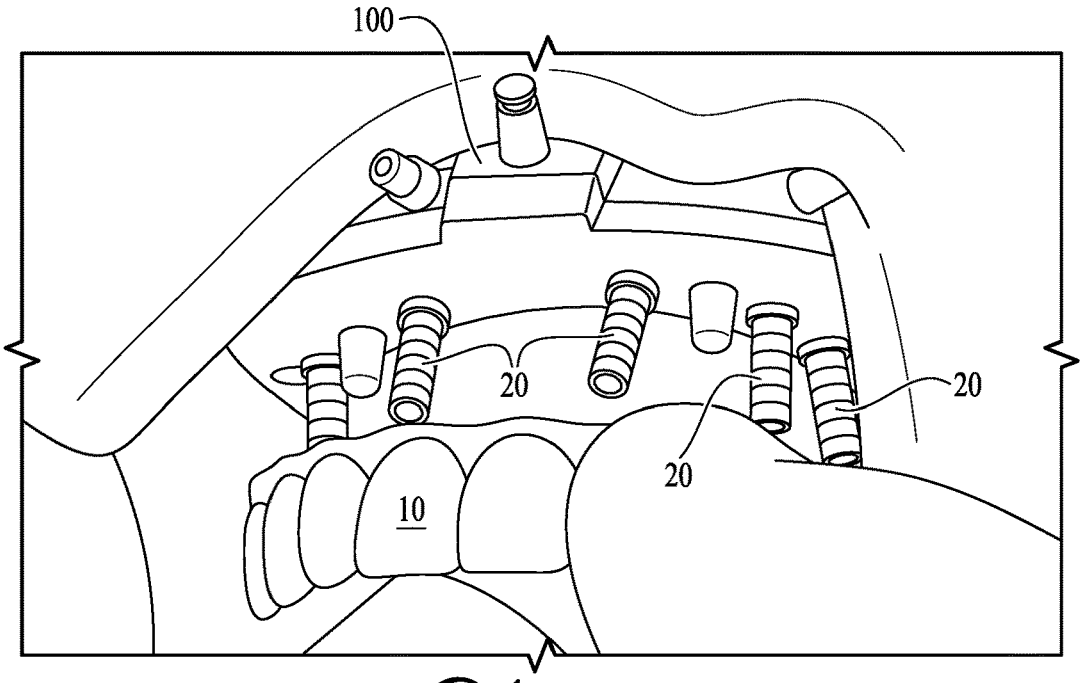

FIG. 10

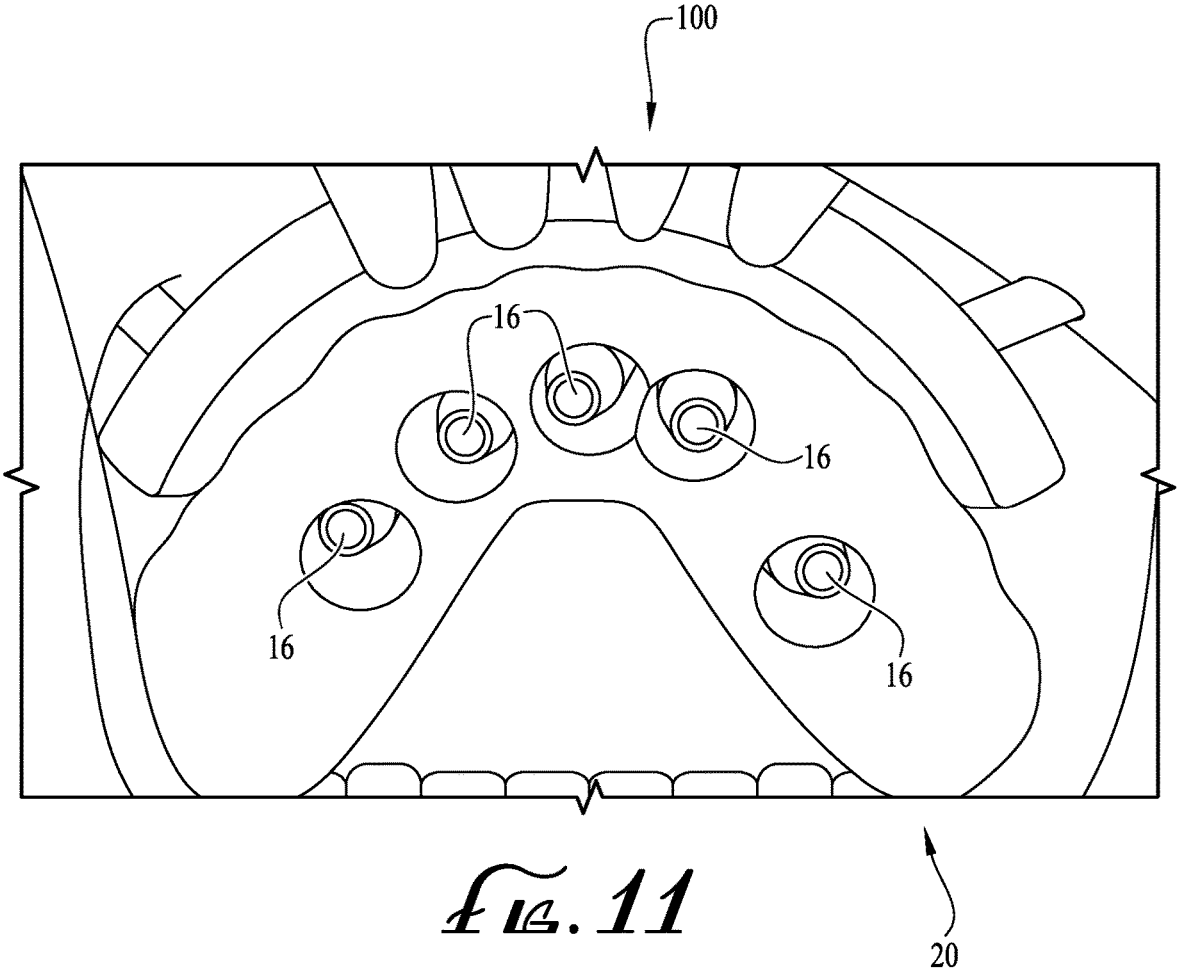

FIG. 11

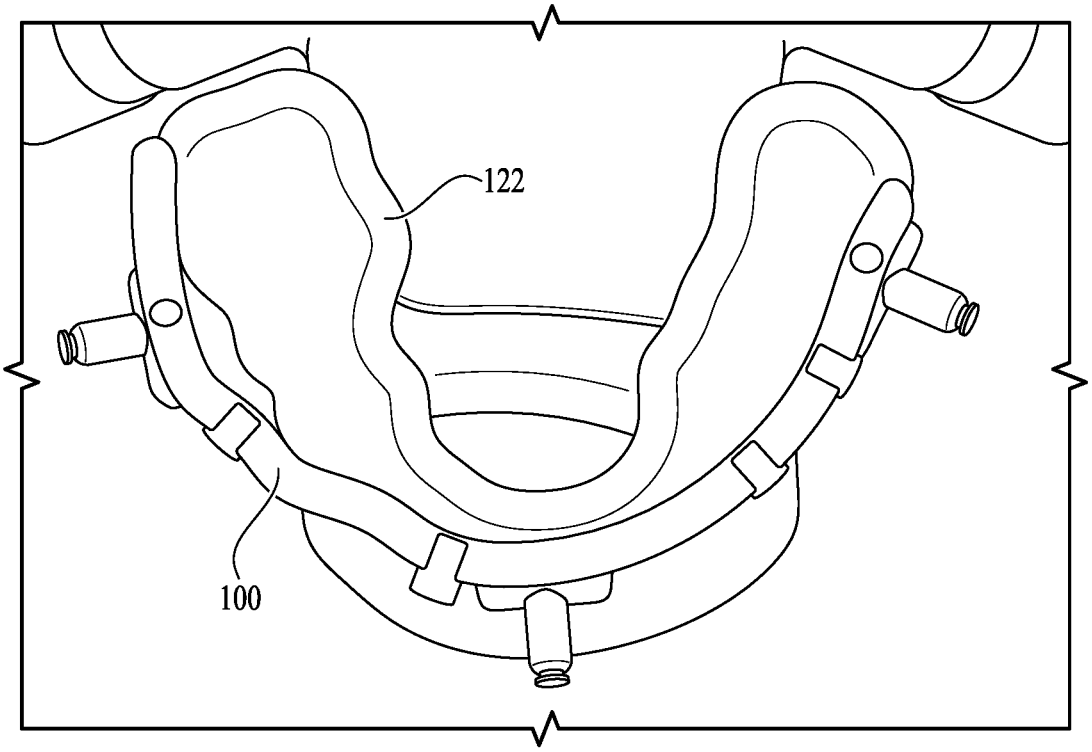

FIG. 12A

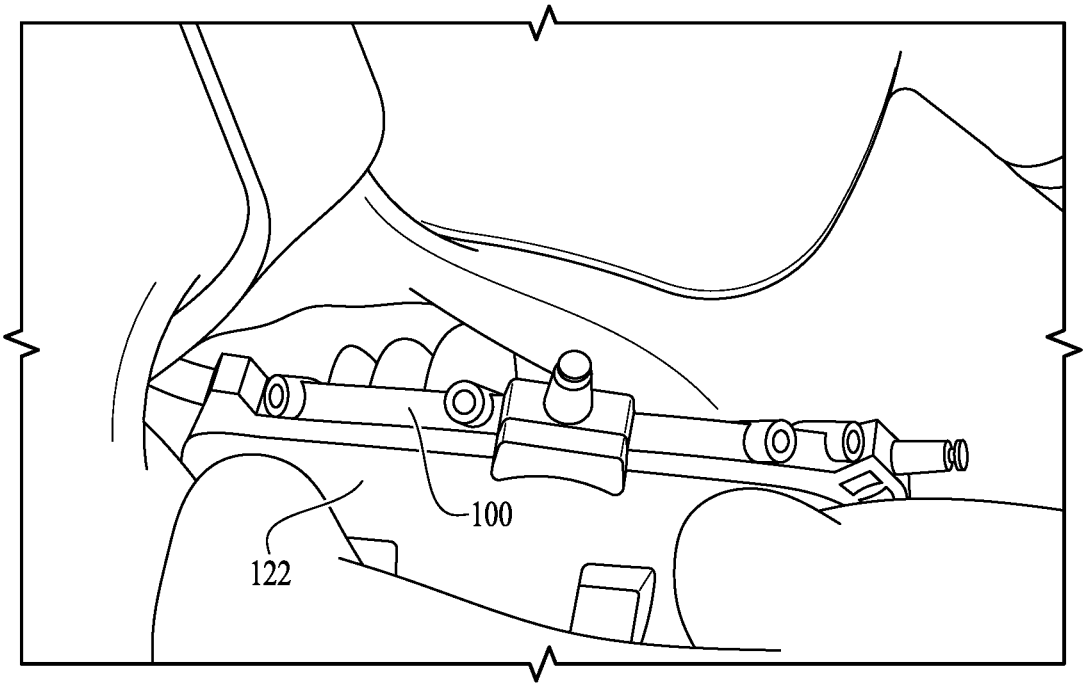

FIG. 12B

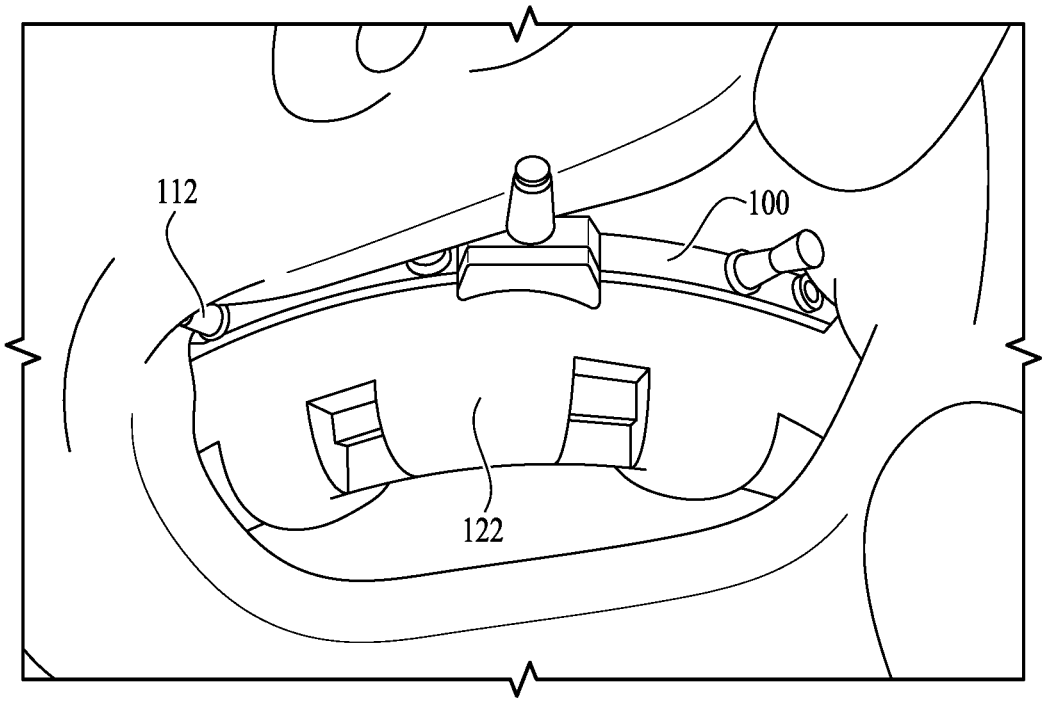

FIG. 12C

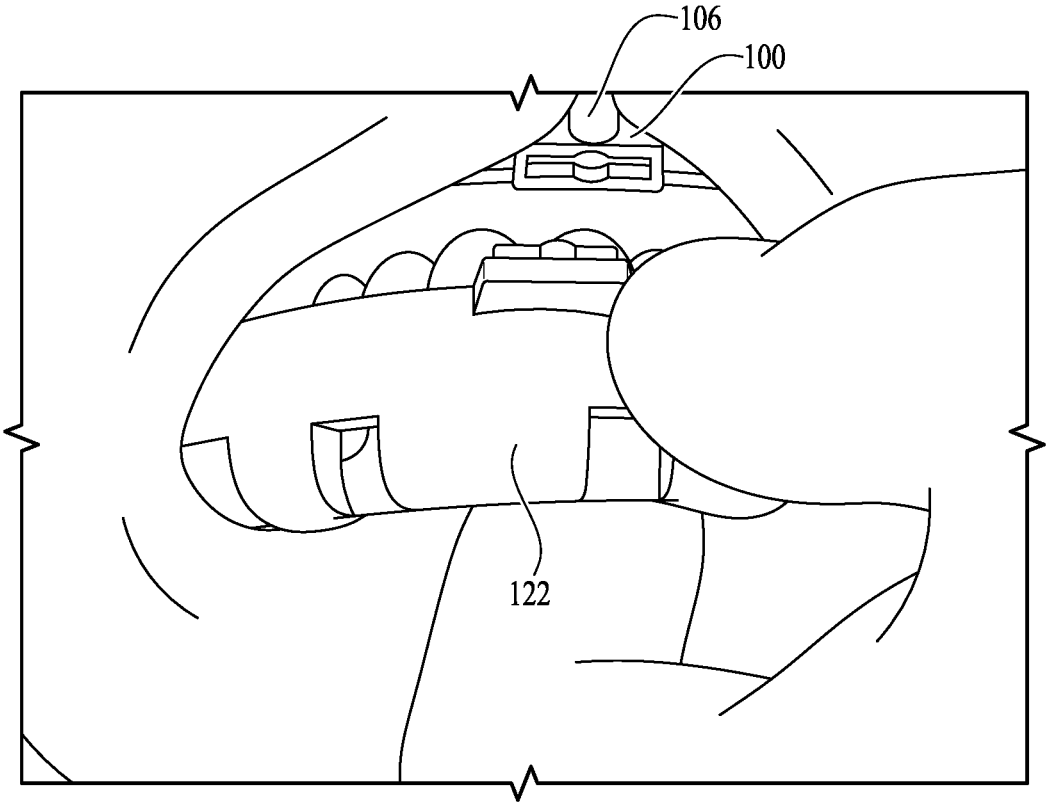

FIG. 12D

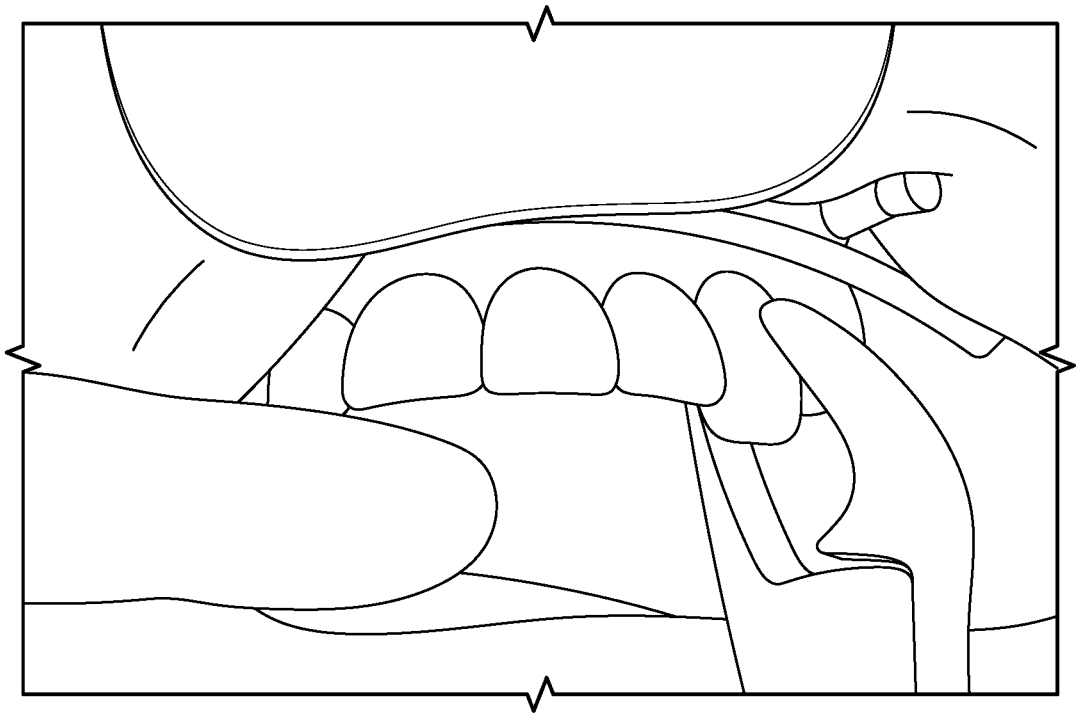

FIG. 12E

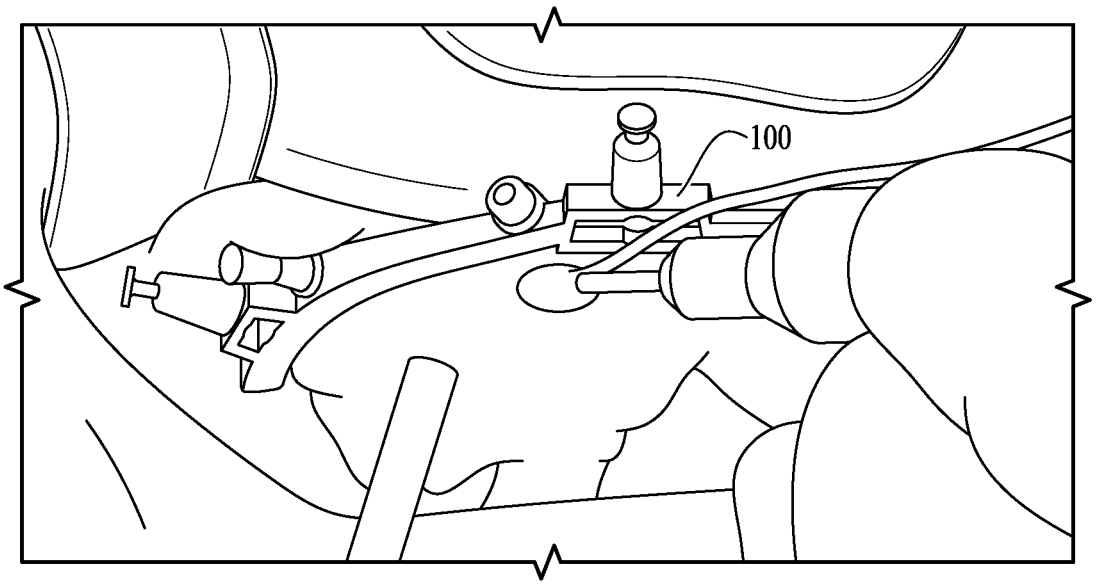

FIG. 12F

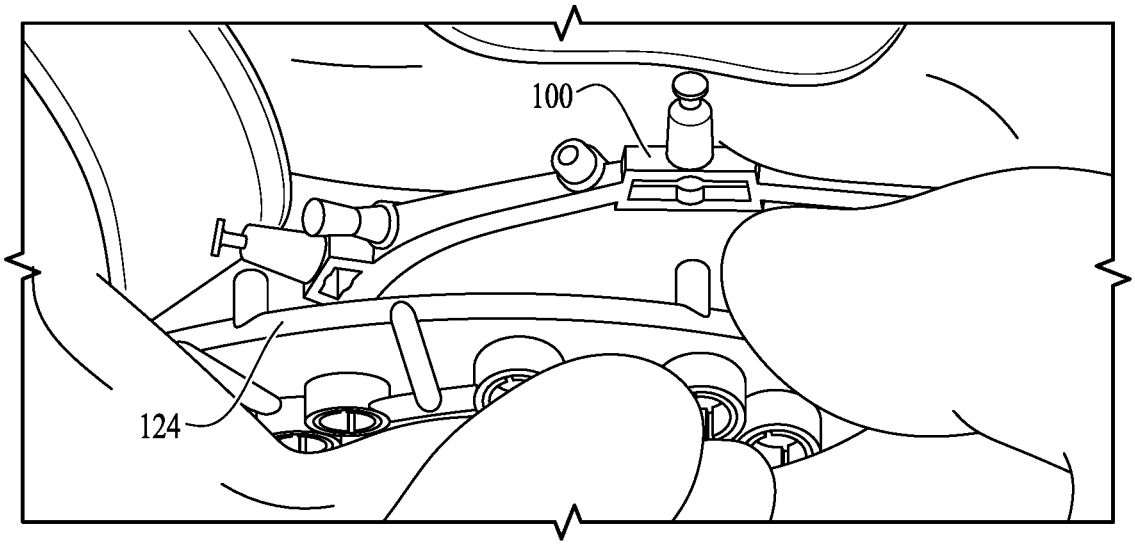

FIG. 12G

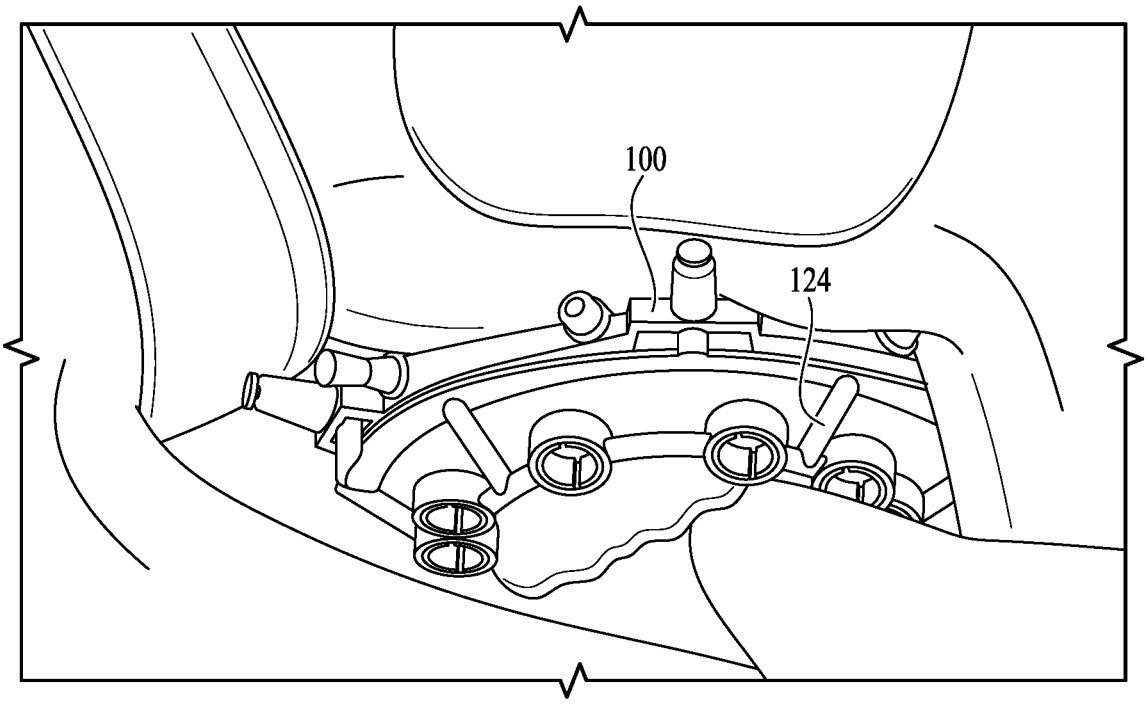

FIG. 12H

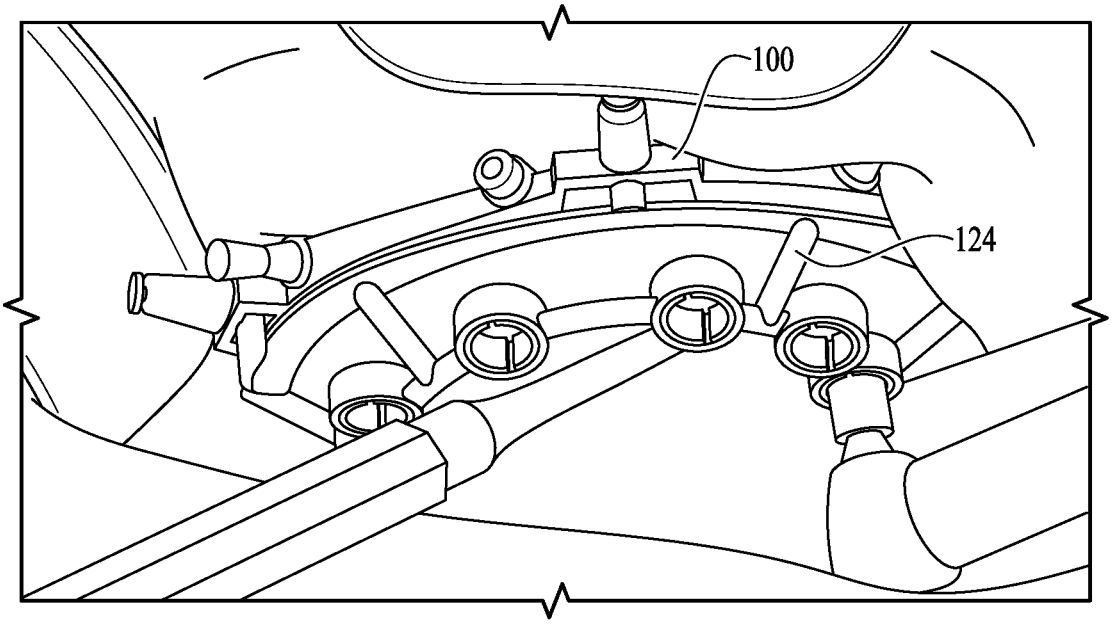

FIG. 12I

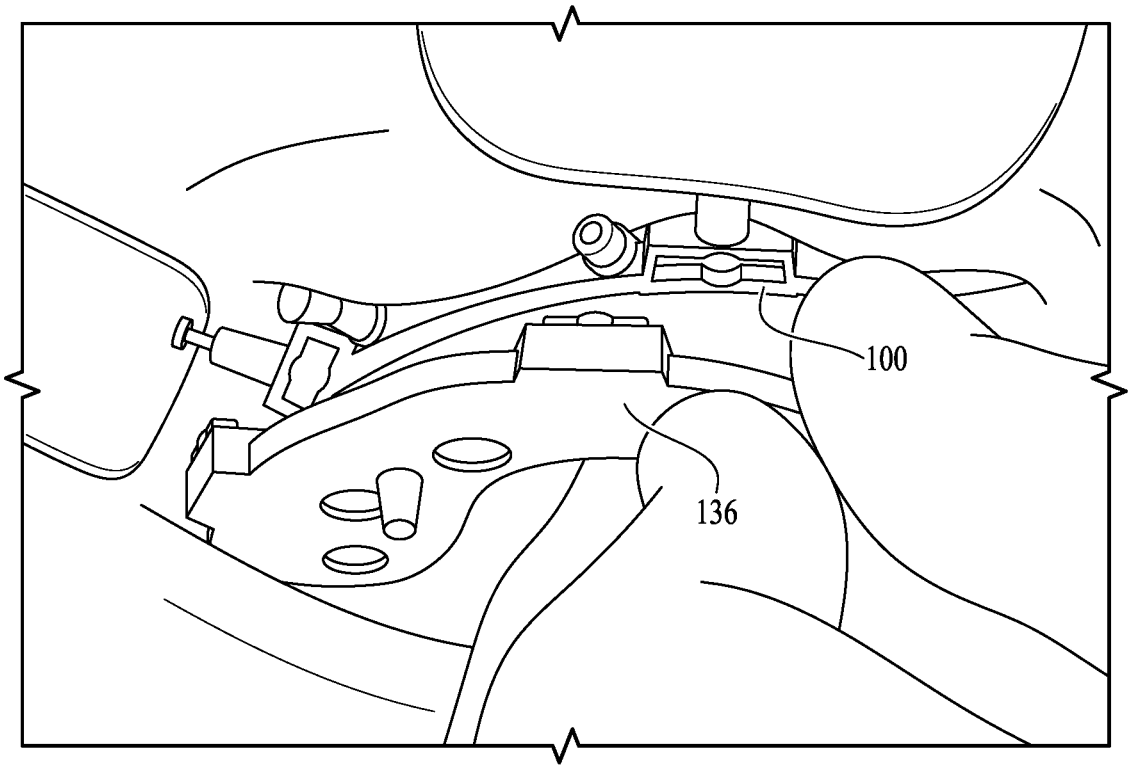

FIG. 12J

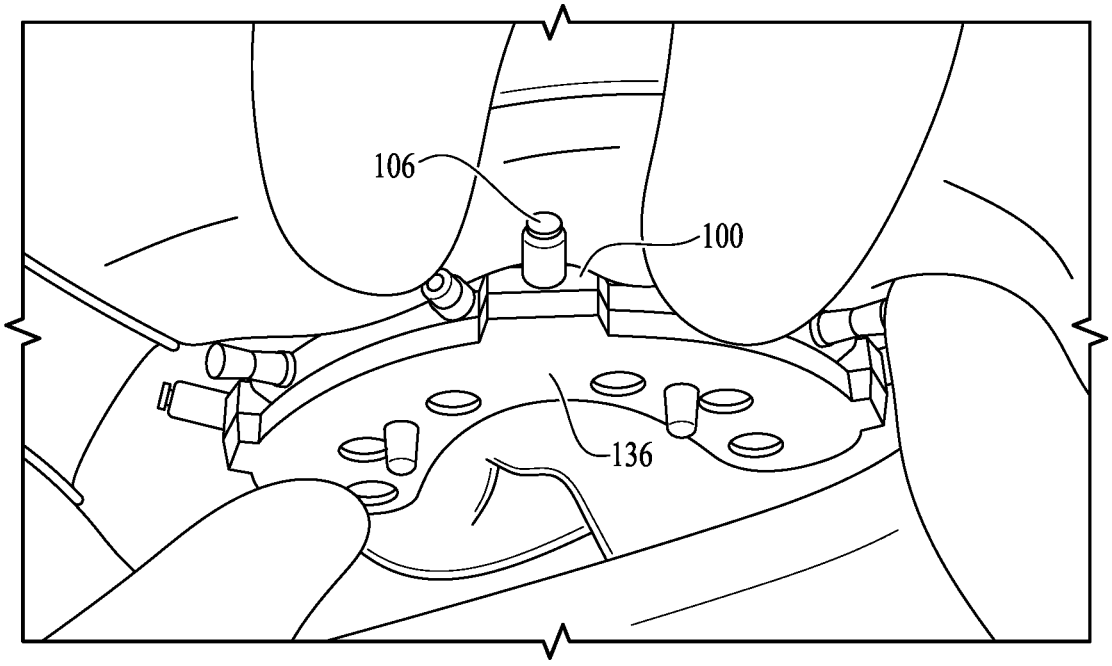

FIG. 12K

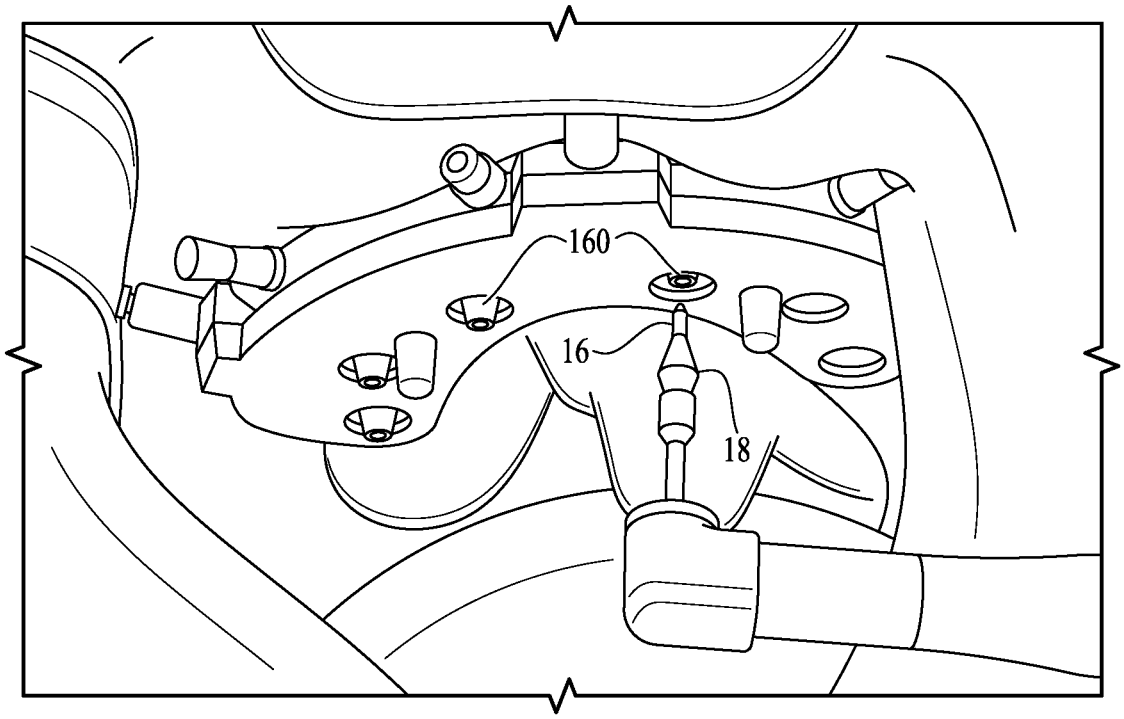

FIG. 12L

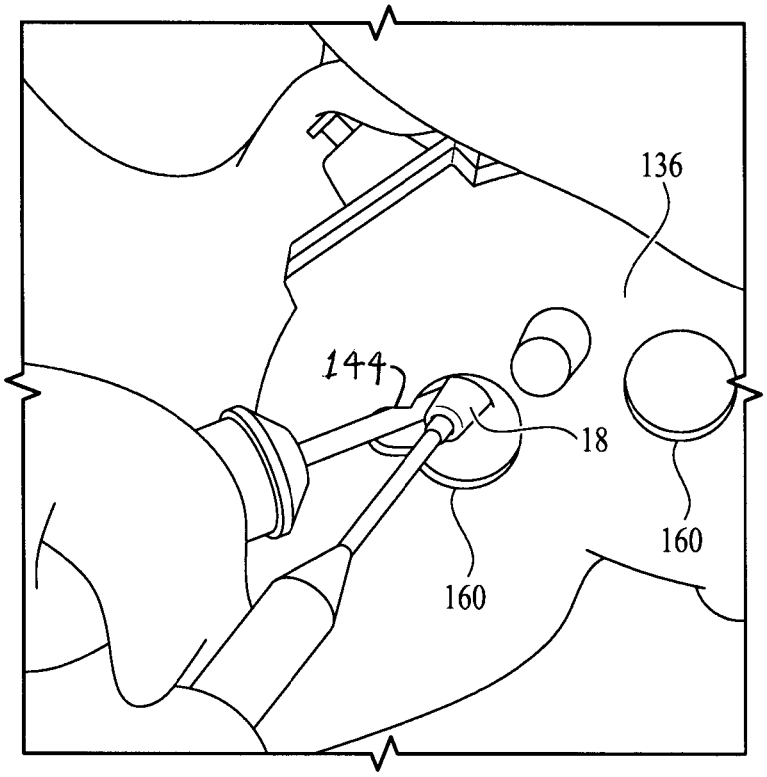

FIG. 12M

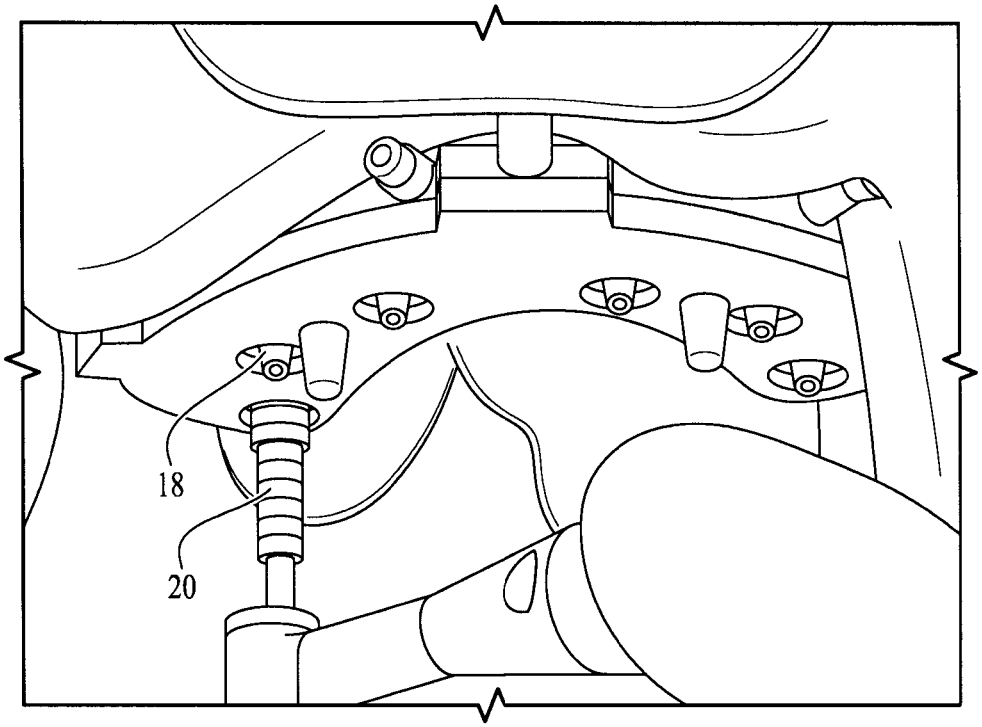

FIG. 12N

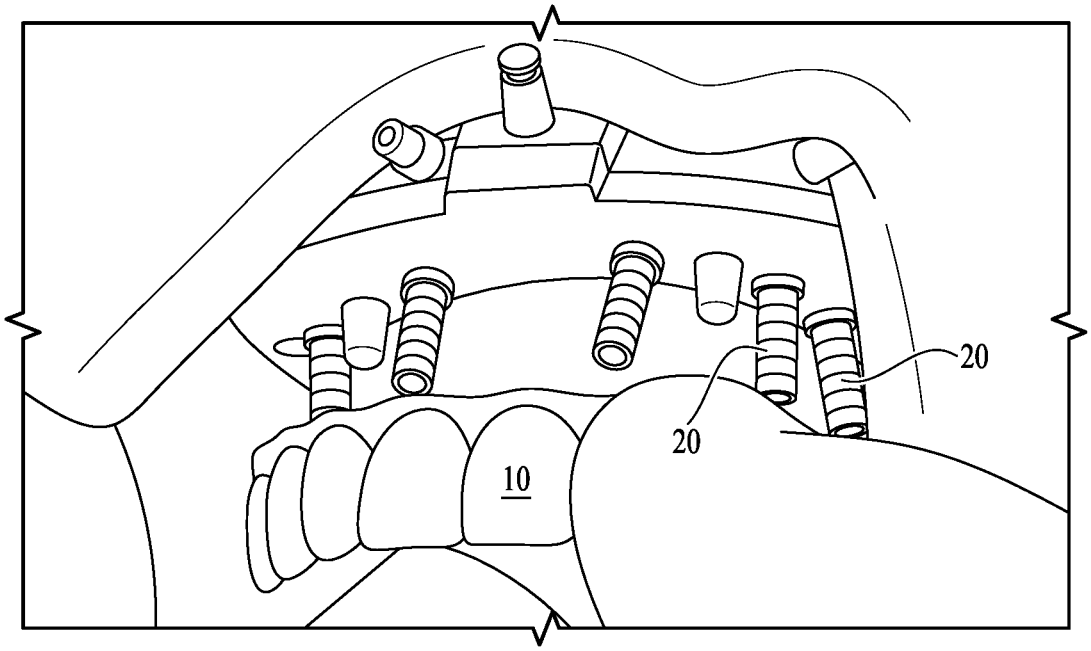

FIG. 12O

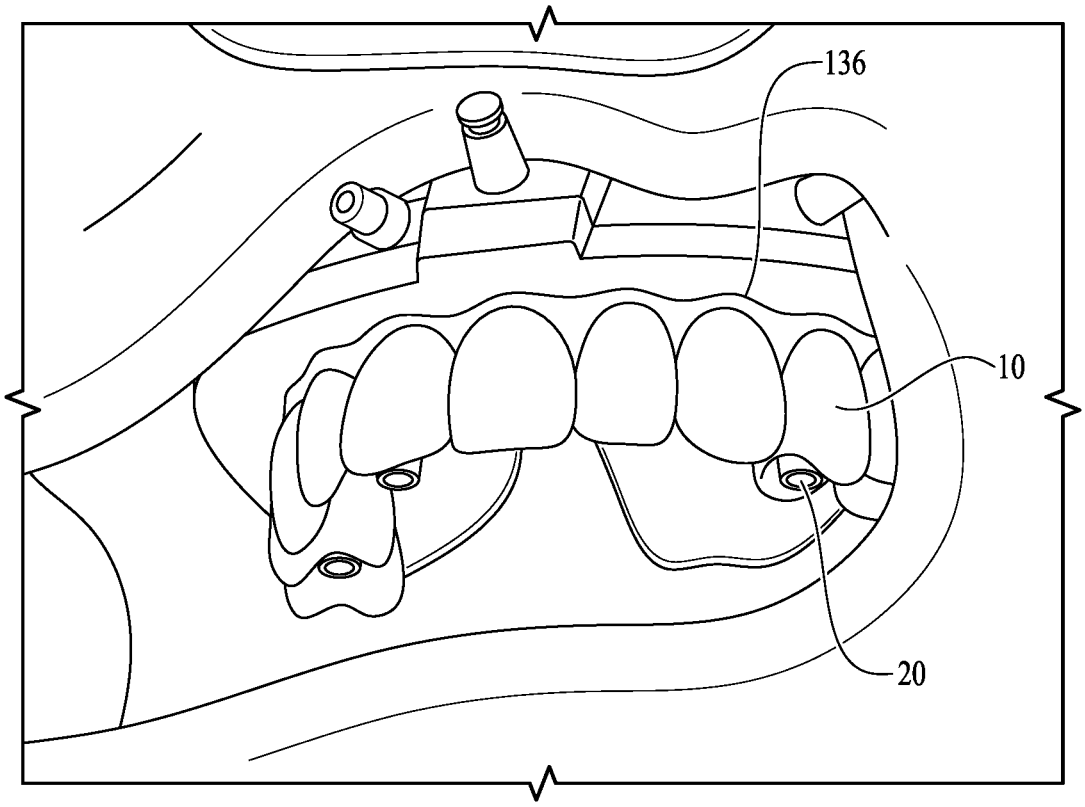

FIG. 12P

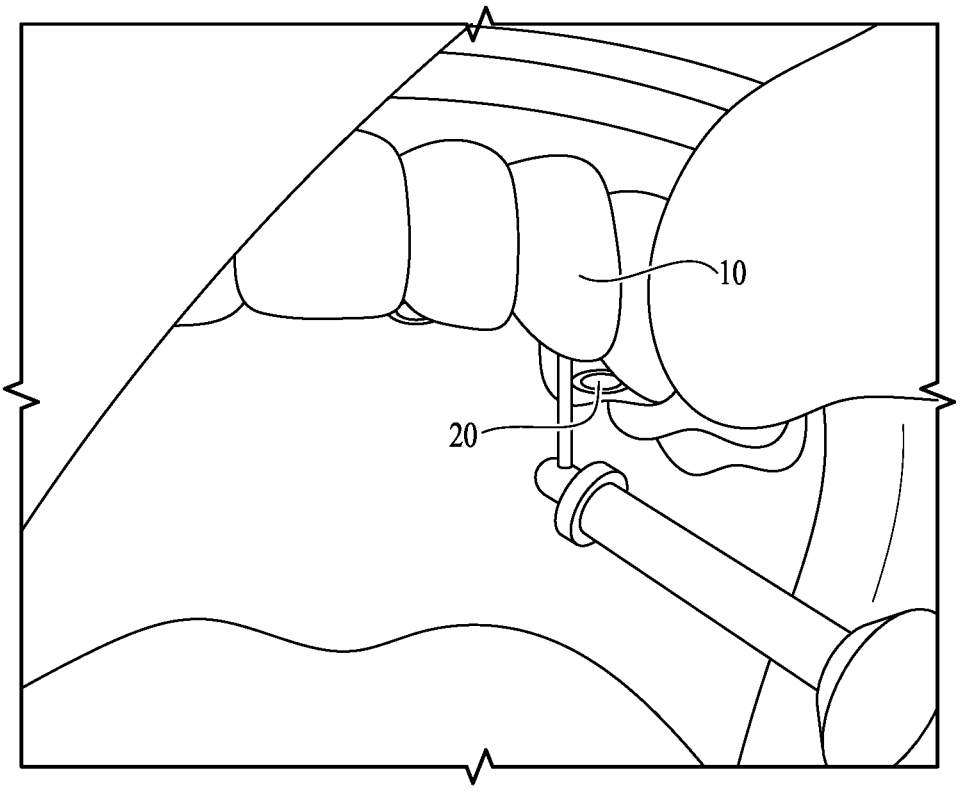

FIG. 12Q

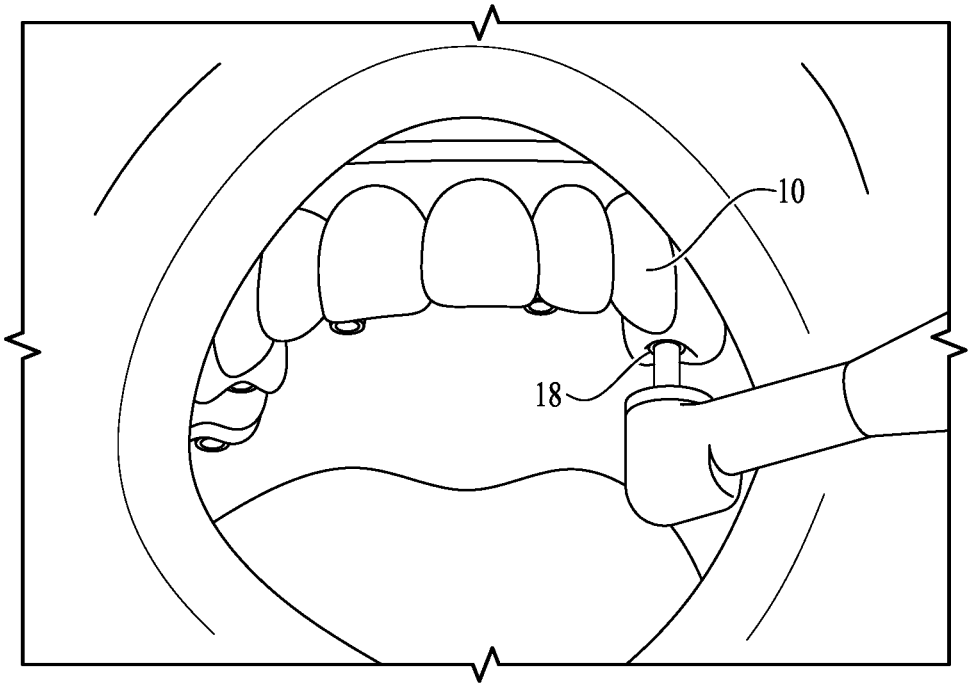

FIG. 12R

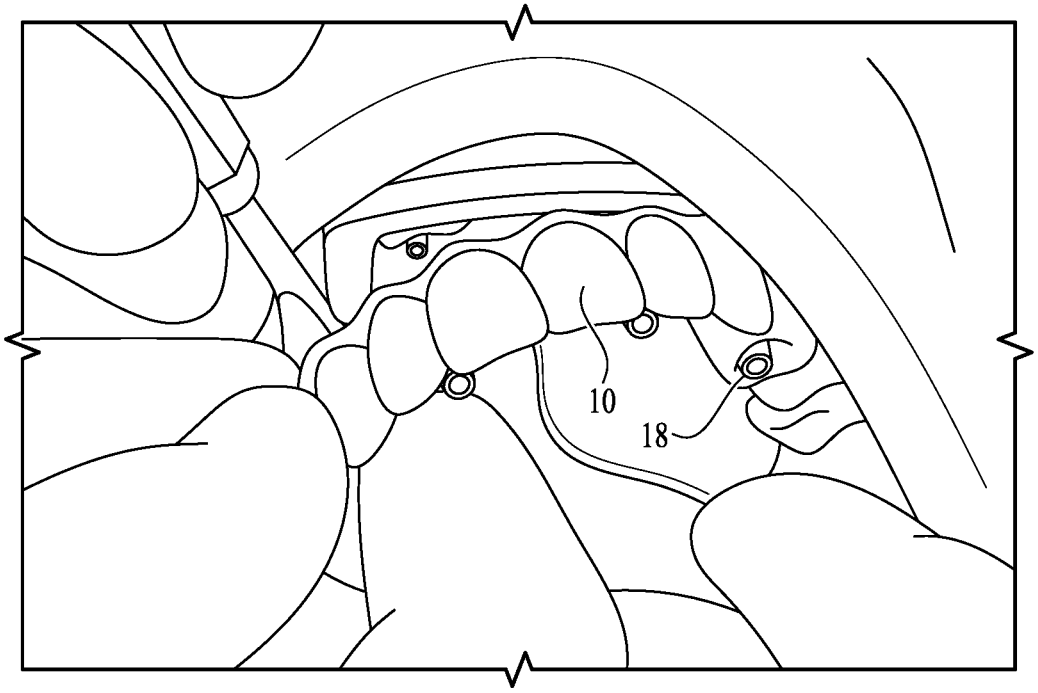

FIG. 12S

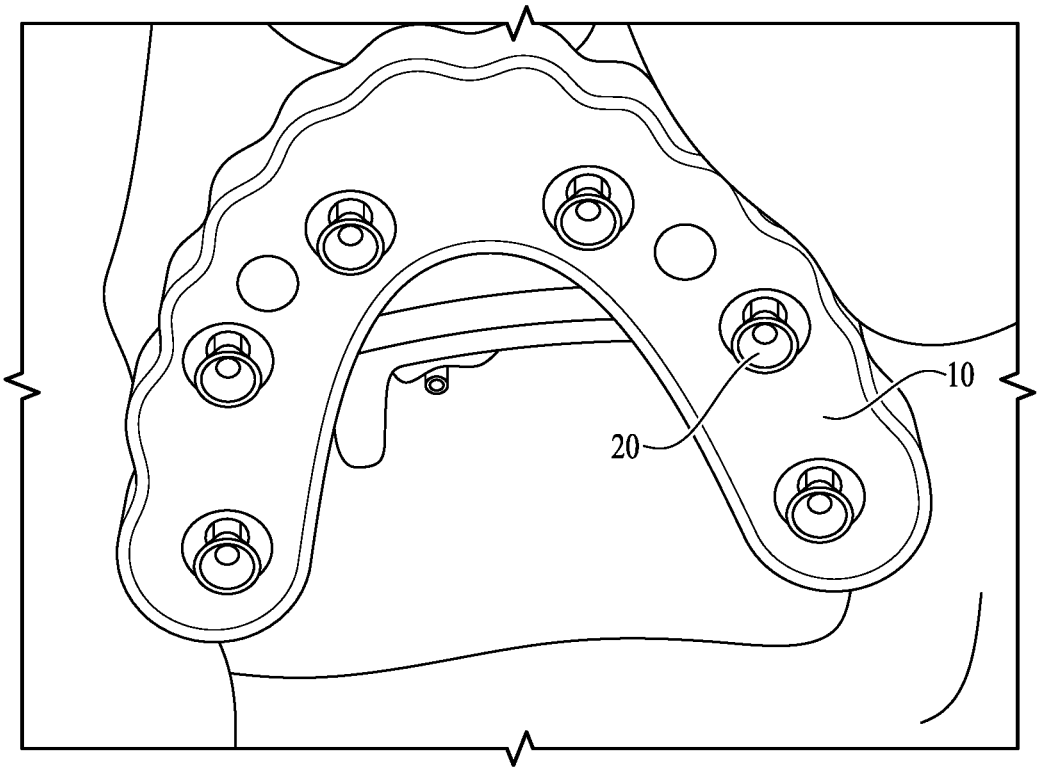

FIG. 12T

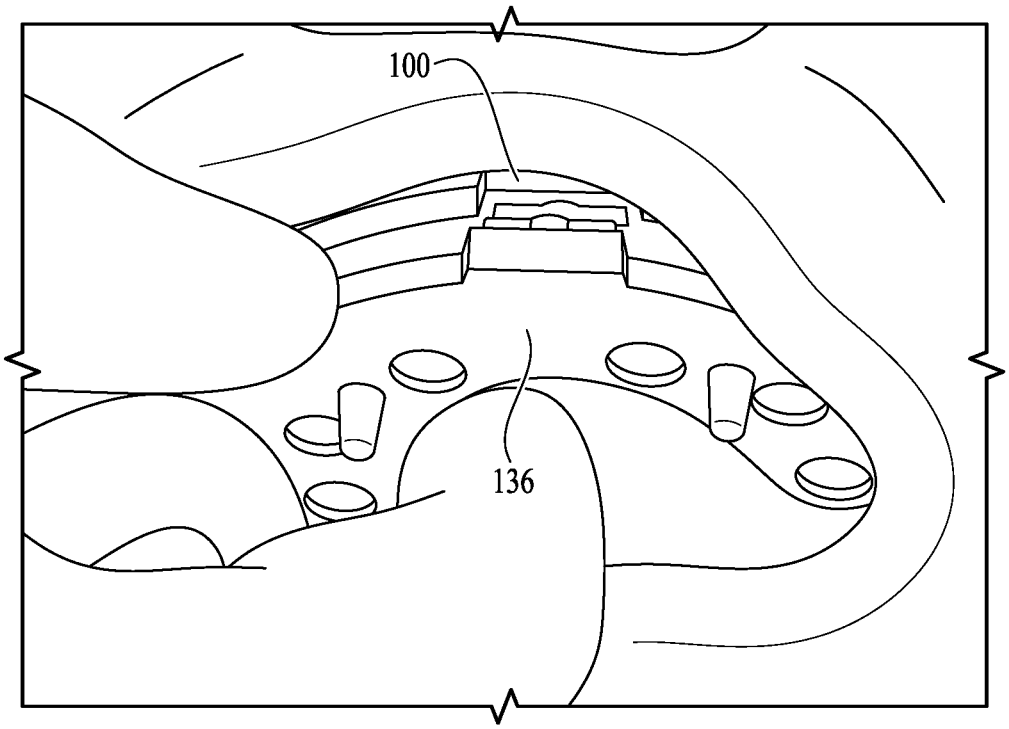

FIG. 12U

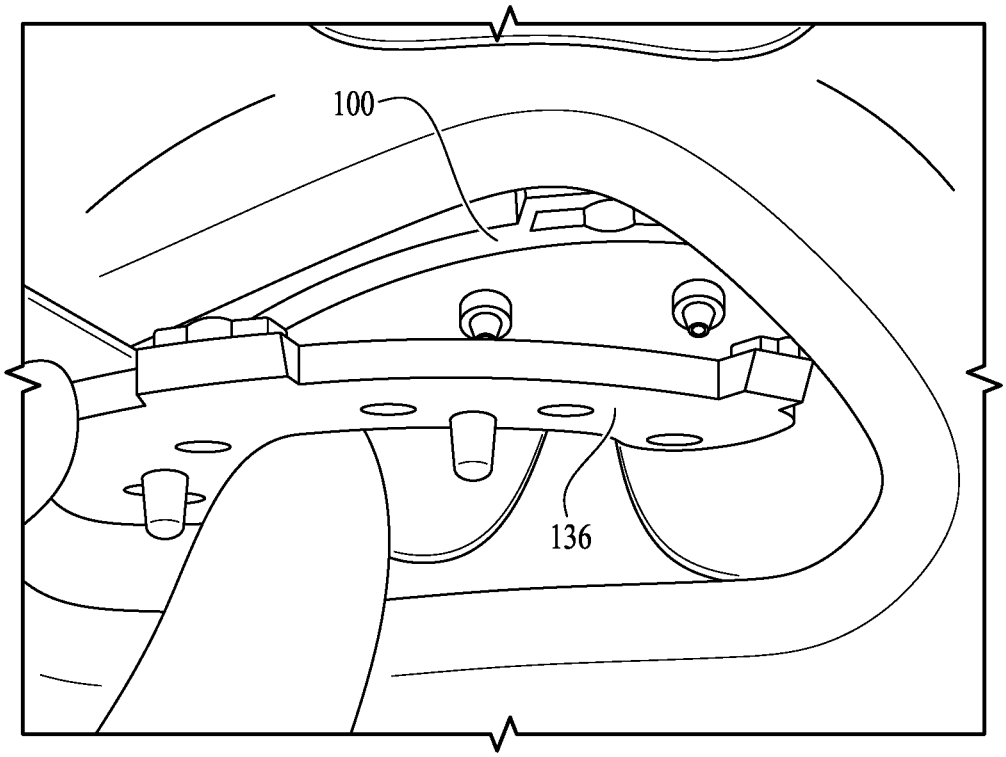

FIG. 12V

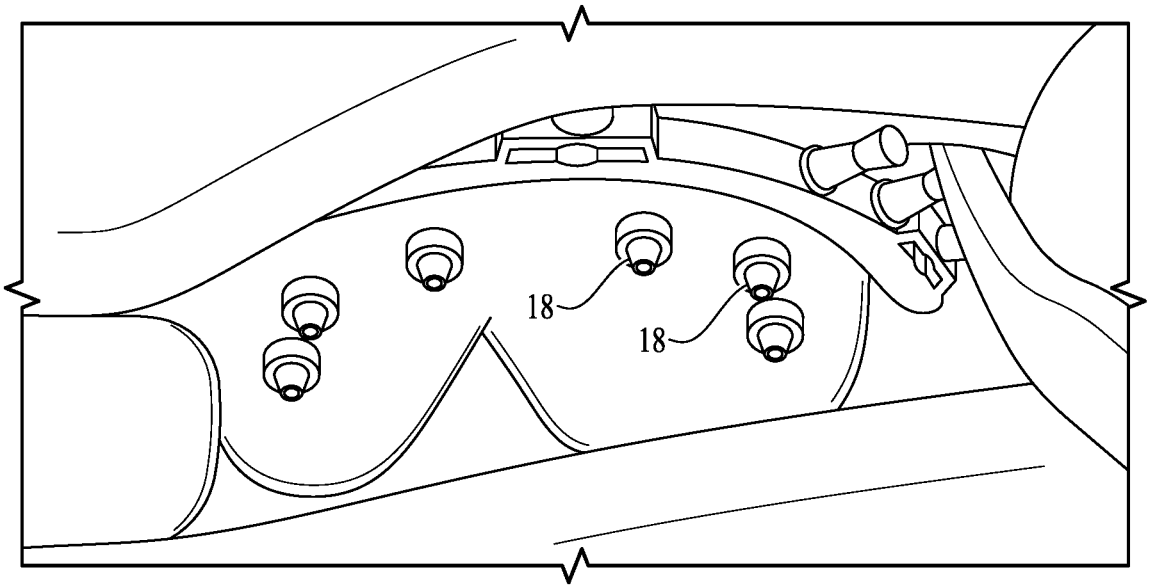

FIG. 12W

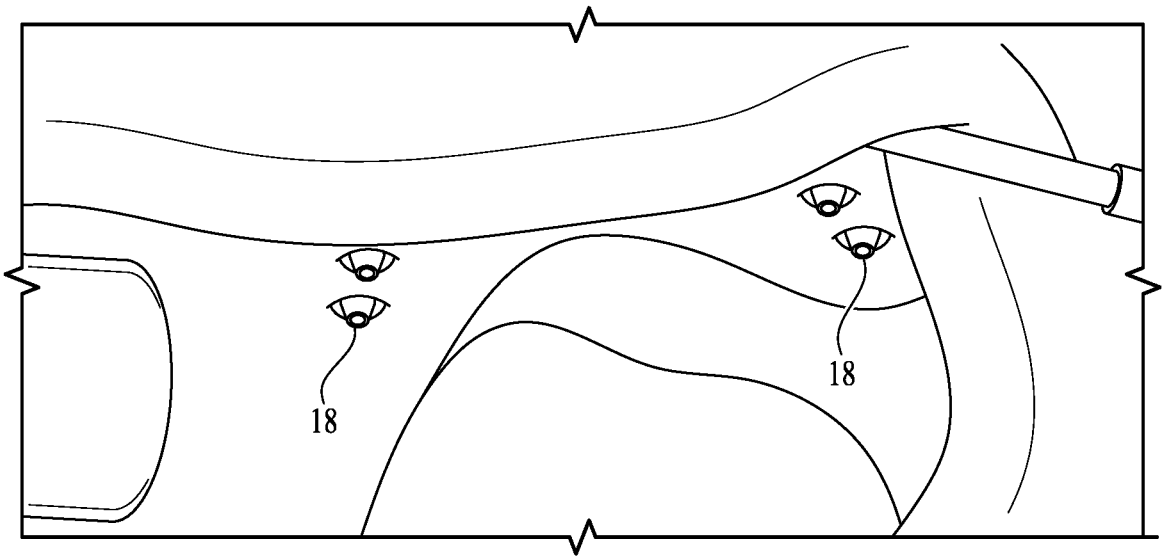

FIG. 12X

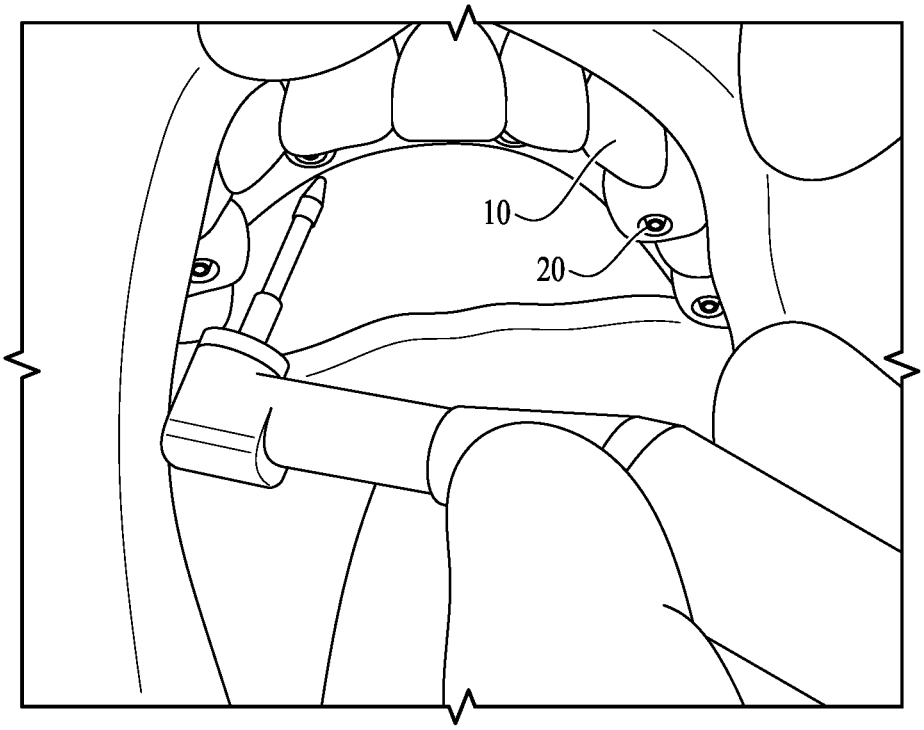

FIG. 12Y

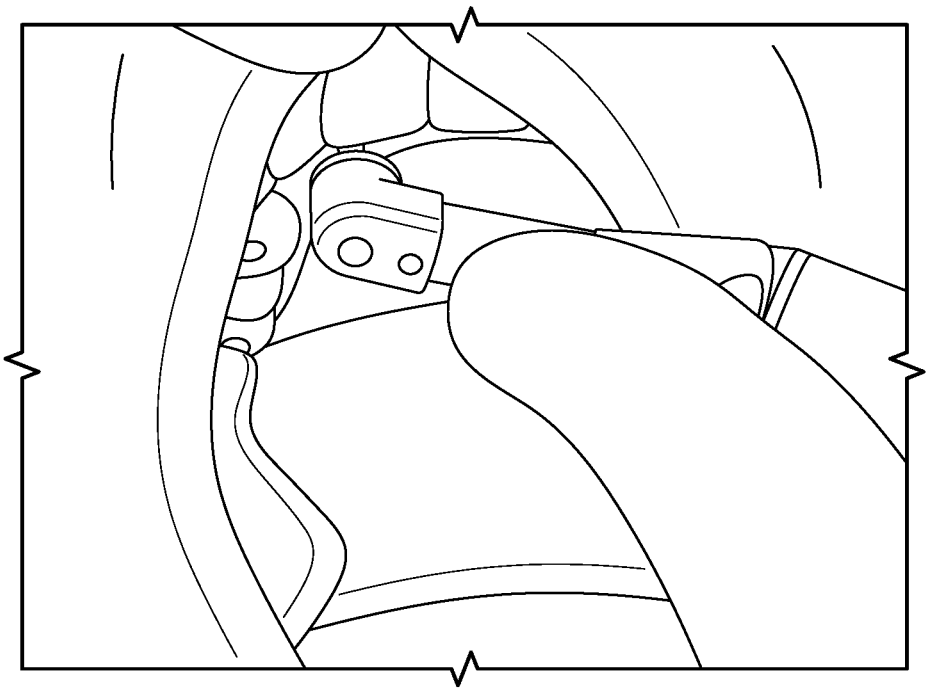

FIG. 12Z

FIXATION BASE AND GUIDES FOR DENTAL PROSTHESIS INSTALLATION

CROSS-REFERENCE TO RELATED APPLICATIONS

This is a continuation application of application Ser. No. 15/984,309, which has a filing date of May 18, 2018 and claims priority to Application Ser. No. 62/508,377, filed May 18, 2017, the contents of both applications are incorporated herein by this reference.

FIELD OF THE INVENTION

The present invention relates to method and apparatus for installing a prefabricated dental prosthesis in the mouth of a patient.

BACKGROUND OF THE INVENTION

For some dental patients, a multi-tooth prosthesis must be installed in a jaw. While multi-tooth prostheses have been developed for anchorage via implants, existing methods and apparatuses for accomplishing such installations are complex, and require considerable time for completion.

SUMMARY OF THE INVENTION

The present invention improves on prior art prosthesis installations by providing a method enabling installation of a multi-tooth prosthesis anchored in implants. The entire procedure can be completed in one session at a dental practitioner. The resulting installation is usable shortly after the procedure has been completed.

The procedure is based on geometric dental guides and a prosthesis all of which are designed around images taken of the patient anatomy. A first tool is attachable to the jawbone, and provides geometrically correct reference points for subsequent operations. The first tool, called a fixation base hereinafter, locates other important geometric dental guides, and remains in place on the dental anatomy for most of the procedure. Installation of the fixation base may be accomplished in conjunction with a second tool, called a mouthpiece hereinafter. The mouthpiece is formed to more of the maxillary or mandibular structure than that contacted by the fixation base from the images, and assists in appropriately setting the fixation base in appropriate location. The mouthpiece may be removed after installation of the fixation base.

With only the fixation base installed, undesired teeth, previously installed dental fixtures, and obstructive body tissues are removed from the work site. Exposed maxillary or mandibular bone is then recontoured by abrasive removal of tissue. The fixation base may be formed with a guide surface to guide a powered reciprocating abrading tool. Alternatively, a separate guide may be provided.

A third dental guide, hereinafter called an abutment guide base, may then be installed to the fixation base. The abutment guide base has holes in abutment sites, and is used to confirm appropriate preparation of the maxillary or mandibular bone tissue. The abutment guide base may then be removed.

Using a fourth tool, a drill guide installed to the fixation base, holes for implants are drilled into the exposed and recontoured bone. Implants are installed in the drilled holes. The drill guide may then be removed, leaving the fixation base in place.

The abutment guide base is installed to the fixation base, and abutments are installed. The abutment guide base has notches appropriately located to index each abutment for appropriate angular orientation on its associated implant.

Copings are then installed using the abutments. The prefabricated prosthesis is then installed over the copings. A settable resin is then applied to bond the copings to the prosthesis. The prosthesis, now integrated with the copings, is removed so that the abutment guide base and fixation base may be removed.

Appropriate restorative steps for the patient's anatomy are then performed, such as suturing the gums.

The prosthesis is then installed for use. A resinous filler material is applied to fill recesses, e.g., gaps between the prosthesis and copings exposed on rearwardly facing surfaces of the prosthesis. The filler is cured and appropriately sanded smooth.

The above steps are summarized, and do not include minor conventional steps such as irrigation. Once the steps are completed, the installation is complete, and may be used by the patient.

The present invention provides improved elements and arrangements thereof by apparatus for the purposes described which is inexpensive, dependable, and fully effective in accomplishing its intended purposes.

These and other objects of the present invention will become readily apparent upon further review of the following specification and drawings.

BRIEF DESCRIPTION OF THE DRAWINGS

Various objects, features, and attendant advantages of the present invention will become more fully appreciated as the same becomes better understood when considered in conjunction with the accompanying drawings, in which like reference characters designate the same or similar parts throughout the several views, and wherein:

FIG. **1** is an environmental plan view of a fixation base used to install a dental prosthesis, according to at least one aspect of the invention;

FIG. **2** is a front view of maxillary and mandibular prostheses, shown with apparatus of the invention attached thereto, and fixed to models of maxillary and mandibular jawbones;

FIG. **3** is an enlarged detail view of a portion of the fixation base of FIG. **1**;

FIG. **4** is a plan view of the fixation base of FIG. **1**, shown attached to a mouthpiece;

FIG. **5**A is a plan view of a drill guide attached to the fixation base (the latter first shown in FIG. **1**);

FIG. **5**B corresponds to FIG. **5**A, but shows the drill guide and fixation base as installed in an actual patient;

FIG. **6** is a plan view of an abutment guide, to be attached to the fixation base of FIG. **1**;

FIG. **7** is a plan view of a bone reduction guide next to the fixation base of FIG. **1**;

FIG. **8** is an environmental plan view of the fixation base of FIG. **1** installed to actual patient anatomy;

FIG. **9** is an environmental plan view of an abutment guide in use on an actual patient;

FIG. **10** is an environmental front view of the fixation base of FIG. **1**, installed on a patient during fitting of a prosthesis over installed copings;

FIG. **11** is an environmental plan view of a prosthesis and implants against a patient, with the fixation base of FIG. **1** installed;

FIG. **12**A is a view showing an exemplary embodiment of the fixation base with mouthpiece guide attached thereto;

FIG. **12**B is a view showing the fixation base with mouthpiece guide of FIG. **12**A starting to be placed on a patient's teeth;

FIG. **12**C a view showing the fixation base with mouthpiece guide of FIG. **12**A properly fitted on a patient's teeth and with holes drilled and hammered in insertion pins;

FIG. **12**D a view showing the fixation base once secured having the mouthpiece guide removed by unlocking the pins and removing the mouthpiece guide;

FIG. **12**E a view showing teeth being removed;

FIG. **12**F a view showing bone being removed using the fixation base with an integrated bone reduction guide so that bone is flush with the fixation base;

FIG. **12**G is a view showing the drill guide being attached to the fixation base;

FIG. **12**H is another view showing the drill guide attached to the fixation base;

FIG. **12**I is a view showing holes being drilled and setting implants, with the location, depth, and angles being managed through the drill guide and drill kit;

FIG. **12**J is a view showing the drill guide removed and the abutment guide being attached to the fixation base;

FIG. **12**K is a view showing the abutment Guide mounted to the fixation base via locking pins;

FIG. **12**L is a view showing the abutments being attached to implants via holes in the abutment guide;

FIG. **12**M is a view showing a notch in the hole where attachment screws are located to ensure proper positioning of the abutments;

FIG. **12**N is a view showing copings being attached to abutments;

FIG. **12**O is a view showing test fitment of the prosthesis and then removal;

FIG. **12**P is a view showing the prosthesis mounted to the abutment jib, and screwing in the prosthesis to the abutments via the copings;

FIG. **12**Q is a view showing inserting epoxy to fuse the prosthesis to the copings;

FIG. **12**R is a view showing unscrewing the prosthesis from the abutments;

FIG. **12**S is another view showing the prosthesis being removed from the abutments;

FIG. **12**T is a view showing epoxy fusing the copings to the prosthesis;

FIG. **12**U is a view showing the abutment guide being removed from the fixation base;

FIG. **12**V is another view showing the abutment guide being removed from the fixation base;

FIG. **12**W is a view showing the abutments properly set and the fixation base being removed;

FIG. **12**X is a view showing the fixation base removed and with the gums being sutured together around the abutments;

FIG. **12**Y is a view showing the prosthesis being reinserted and mounted to the abutments via screws thought the copings; and,

FIG. **12**Z is a view showing the prosthesis being mounted.

DETAILED DESCRIPTION

Referring first to FIG. **1**, according to at least one aspect of the invention, there is shown apparatus for installing a dental prosthesis **10** (see FIG. **2**) to a maxillary or mandibular jaw bone (see FIGS. **10** and **11**) of a patient **14** (FIG. **5**B) in a single session, using implants **16** (see FIG. **11**). The apparatus may comprise a fixation base **100** for providing an attachment surface for other apparatus used to orient implants **16**, abutments **18** (FIG. **9**), copings **20**, and dental prosthesis **10** during an installation procedure. Fixation base **100** may further comprise a generally arcuate base member **102** having a front surface **104** bearing a plurality of fasteners **112**, a rear surface **108** configured and dimensioned to fit flushly against a maxillary or mandibular bone structure of the patient, and a horizontal surface **110** bearing first attachment elements **106** for engagement of a first dental guide **122** (see FIG. **4**) usable with fixation base **100**, and wherein fixation base **100** is non-anatomical.

Fixation base **100** is usable with either the mandibular or maxillary jaw bone, as seen in FIG. **2**, which uses artificial models **22** of jawbones. Hence, orientation of fixation base **100** changes with use. Description herein will focus on maxillary use, it being understood that the same principles apply for mandibular use. With discussion directed to maxillary use, orientational terms will assume that the head of the patient is facing forwardly in a normal position that would occur with the patient standing straight on his or her legs. Alternatively stated, it is assumed for purposes of discussion that the maxillary jawbone is above the novel apparatus. Therefore, orientational terms such as vertical, horizontal, forwardly, and rearwardly must be understood to provide semantic basis for purposes of description, and do not limit the invention or its component parts in any particular way.

Fixation base **100** provides not only an attachment surface for other apparatus, but also locates the other apparatus precisely for the dental procedure. Fasteners **112** may be nails, for example. Close fitting holes are drilled into the maxillary jawbone to receive fasteners **112**. First attachment elements **106** may comprise pins, threaded bolts, or other manually removable fasteners, and are made to cooperate with corresponding openings in the other apparatus to be mounted on fixation base **100**. Fixation base **100** is non-anatomical, being fabricated from a metal, metal alloy, or other strong material. Fixation base **100** may be fabricated for example by three dimensionally printing using a chromium cobalt alloy.

Unless otherwise indicated, the terms "first", "second", etc., are used herein merely as labels, and are not intended to impose ordinal, positional, or hierarchical requirements on the items to which these terms refer. Moreover, reference to, e.g., a "second" item does not either require or preclude the existence of, e.g., a "first" or lower-numbered item, and/or, e.g., a "third" or higher-numbered item.

In one example of the invention, fixation base **100** comprises a plurality of bosses **114** (see FIG. **1**) extending radially from the front surface, including bores **116** (see FIG. **3**) for receiving and aligning first attachment elements **106**. Fixation base **100** may also comprise a plurality of slots **118** for accepting tabs (not shown) of the first dental guide **122**. Bosses **114** provide effective guidance surface for attachment elements **106**, while minimizing mass of fixation base **100**. This characteristic enables the dental practitioner to view the work site more effectively than would be the case if fixation base **100** were larger, thereby obscuring the work site.

Although fixation base **100** is utilized by itself, properly locating fixation base **100** will likely require an additional guide component. To this end, and referring especially to FIG. **4**, the apparatus may further comprise first dental guide **122**, wherein first dental guide **122** is a mouthpiece configured and dimensioned to surround teeth (not shown) of the patient, and to releasably attach to fixation base **100**. First

dental guide **122** may comprise a plurality of tabs (not shown, but similar to tabs **140**, FIG. **6**) corresponding in configuration to slots **118** (FIG. **1**) extending toward and fitting closely with slots **118** of fixation base **100**. First dental guide **122** engages fixation base **100** by interfit between slots **118** of fixation base **100** and the tabs of first dental guide **122**. The purpose of first dental guide **122** is to assist in locating fixation base **100** with sufficient precision to assure successful installation of dental prosthesis **10**. Therefore, first dental guide **122** is used when installing fixation base **100** in the mouth, but is removed thereafter and plays no further role. Subsequently used dental guides use tabs corresponding to those of first dental guide **122**, in the same way, and to the same end, that of precisely locating the subsequently used dental guides prior to fixing the latter using attachment elements **106**.

The apparatus may further comprise a second dental guide **124**, wherein second dental guide **124** is a drill guide for guiding drilling of holes for implants **16**. The drill guide is attachable to fixation base **100** in a position wherein the drill guide is in vertical registry with the maxillary or mandibular jaw bone. The drill guide may include a seating feature cooperating with attachment elements **106** of fixation base **100**, and a plurality of generally vertical bores **126** corresponding in location to and in axial registry with intended implant sites. The recited structure both pins second dental guide **124** securely to fixation base **100**, and also properly orients vertical bores **126** relative to bone tissue, to assure appropriate orientation of implant holes drilled into the jaw. Second dental guide **124** may include stops (not separately shown) within bores **126**, to prevent excessive penetration of drills into bone tissue. These stops may comprise e.g. shoulders interfering with the drill.

Referring particularly to FIG. **5**A, the drill guide may be made from a metal or metallic alloy, and comprises a support bar **128** attachable to fixation base **100** (via attachment elements **106**), one boss **130** for each one of vertical bores **126**, bosses **130** attached to support bar **128** by arms **132** such that voids **134** exist between bosses **130** and support bar **128**. Voids **134** enable direct observation of patient anatomy and insertion of irrigation and evacuation apparatus.

With reference to FIG. **6**, the apparatus may further comprise a third dental guide **136**. Third dental guide **136** is an abutment guide base including bores **138** sized and oriented to receive abutments **18** and guide abutments **18** for placement against implants **16**. The abutment guide base is attachable to fixation base **100** in a position wherein bores are in vertical registry with the maxillary or mandibular jaw bone and implants **16** after installation of the latter.

In summary, apparatus of the invention may include fixation base **100**, serving as a foundation for supporting subsequently used guides. Fixation base **100** may also have one edge or surface formed for use as a guide when removing bone tissue, as will be described hereinafter. As an alternative to forming one edge or surface of a guide, the apparatus may include a separate bone reduction guide **142** (FIG. **7**). Bone reduction guide **142** has attachment structure cooperating with slots **118** and attachment elements **106** of fixation guide **100**, and a surface against which an appropriate bone removal tool (not shown) may be moved while abrading bone tissue.

The apparatus may include first dental guide **122** to properly locate fixation base **100**, second dental guide **124** as a drill guide, and third dental guide **136** to place abutments and to visually check alignments.

Exemplary methods of using the above apparatus to install multi-tooth dental prosthesis **10** will now be set forth.

A method of installing multi-tooth dental prosthesis **10** (e.g., as shown in FIG. **2**) in a mouth of a patient may comprise obtaining anatomical data from the mouth of the patient; and from the obtained data, designing and fabricating dental prosthesis **10**, fixation base **100** to serve as a mounting jig for other dental guides, an abutment guide base (third dental guide **136**) to assure appropriate location of subsequently installed implants and abutments, and a drill guide (second dental guide **124**) to assure appropriate location and orientation of holes to be drilled for implants **16**.

The method may include installing fixation base **100** to maxillary or mandibular bone tissue of the patient; removing at least one of natural teeth, dental fixtures, and obstructive mouth tissues (none of these is shown) from the work site, to expose an underside of the maxillary or mandibular bone tissue.

The method may comprise recontouring the bone tissue (by bone removal); drilling implant holes into the recontoured bone tissue, using the drill guide attached to fixation base **100**; installing implants **16**; removing the drill guide (second dental guide **124**); installing abutments **18**, and using the abutment guide base (third dental guide **136**) attached to fixation base **100**.

The method may include installing copings **20** to abutments **18**; installing dental prosthesis **10** over copings **20**; bonding copings **20** to dental prosthesis **10**; removing dental prosthesis **10**, the abutment guide base (third dental guide **136**) and fixation base **100**; and permanently installing dental prosthesis **10** to abutments **18**.

Anatomical data may be obtained via CT scans or other imagery techniques. From these images, one of skill in the dental arts may design a suitable prosthesis, and the apparatus described above.

The above is a description of a simplified or basic method. In the basic method, medically advisable procedures and steps such as irrigation are ignored to avoid obscuring the novel method. The basic method may be enhanced with the following additional steps.

The method may further comprise, after installing fixation base **100** to maxillary or mandibular bone tissue of the patient, cutting back gum tissue to expose forwardly facing surfaces of the bone tissue. This enables solid seating of fixation base **100** against relatively rigid anatomical features, so that geometric integrity is preserved when relying on fixation base **100** to locate other guides.

In the method, installing fixation base **100** to maxillary or mandibular bone tissue of the patient may further comprise drilling holes into the exposed forwardly facing surfaces of the bone tissue, and driving fasteners through fixation base **100** into the drilled holes, to secure fixation base **100** to the maxillary or mandibular bone. Using driven fasteners such as nails provides a relatively expeditious yet robust way of securing fixation base **100** to the bone tissue.

The method may further comprise designing and fabricating a mouthpiece (first dental guide **122**, FIG. **4**) from the obtained data of the mouth of the patient, wherein the mouthpiece complements fixation base **100** by conforming to some surfaces of the mouth of the patient not covered by fixation base **100**. The method may further comprise using the mouthpiece to assist in locating fixation base **100** appropriately when installing fixation base **100** to maxillary or mandibular bone tissue of the patient, and removing the mouthpiece after installing fixation base **100** to the maxillary or mandibular bone tissue. As stated previously, including the mouthpiece enhances accuracy and geometric integrity

of the installation, when compared to placing and relying solely on fixation base **100**. It also enables fixation base **100** to be of minimal bulk, thereby affording better viewing of the procedure by the dental personnel.

In the method recontouring the bone tissue may comprise using a preformed surface on fixation base **100** to guide a bone removal tool (not shown). In FIG. **8**, fixation base **100** includes a surface formed to guide the bone removal tool. As may be seen in this view of actual patient anatomy, bulk of fixation base **100** is not excessive, and reduced bone tissue **12** remains in full view to the dental practitioner.

Referring to FIG. **7**, in the method, recontouring the bone tissue may comprise using a bone removal guide **142** separate from fixation base **100** to guide a bone removal tool. Bone removal guide **142** may accommodate a revision to the desired contours, which revision may possibly not be reflected in or possible with fixation base **100**. It may be, for example, that fixation base **100** was formed outside of specified geometric parameters. In this situation, fixation base **100** may nonetheless still be utilized.

In the method, installing abutments **18** may include adjusting the abutments to appropriate angular orientations relative to a central axis of associated implants **16** using pre-established indicators in the abutment guide base. Referring to FIGS. **6** and **9**, a bore **138** for an abutment **18** may include a notch **144** serving as an indicator for appropriate angular or rotational orientation of abutment **18**. In FIG. **9**, a tool such as a small screwdriver occupies notch **144** while another tool rotates abutment **18** appropriately.

In the method, installing dental prosthesis **10** over copings **20** and bonding copings **20** to dental prosthesis **10** may further comprise applying a blocking material to seal holes in the dental prosthesis for receiving abutments **18**, and applying a settable resin spanning copings **20** and dental prosthesis **10**. The settable resin seals gaps that would otherwise exist between copings **20** and dental prosthesis **10**. This solidifies dental prosthesis **10** and copings **20** as a single component, and may discourage deposits of food and resultant growth of bacterial colonies.

The method of may further comprise, after removing dental prosthesis **10** after bonding copings **20** to dental prosthesis **10** and removing dental prosthesis **10**, the abutment guide base (third dental guide **136**, FIG. **6**), and fixation base **100**, verifying geometric orientations of attachment points for dental prosthesis **10**. FIG. **10** shows a test fitment of dental prosthesis **10** in an actual patient after removal of third dental guide **136**, although fixation base **100** has been left in place. Verification of attachment points may prevent a faulty installation going unnoticed until after the patient has left the dental office.

The method may further comprise, after removing dental prosthesis **10**, the abutment guide base (third dental guide **136**, FIG. **6**), the fixation base **100**, and prior to permanently installing dental prosthesis **10** to abutments **18**, suturing gums of the patient in positions against the dental prosthesis. This reestablishes protections provided by gum tissue.

In the method, permanently installing the dental prosthesis may further comprise screwing dental prosthesis **10** to implants **10** or to abutments **18**. While the latter is conventional, screwing dental prosthesis **10** in place to one or the other allows for subsequent removal, should that become necessary. In this context, permanent installation refers to ability of the patient to use the newly installed dental prosthesis **10** without further professional attention by the dental practitioner.

In the method, permanently installing dental prosthesis **10** may further comprise applying a filler material to fill recesses in a rearwardly facing surface of dental prosthesis **10**. This may improve esthetics of the installation, and may eliminate places for food to lodge and bacteria to grow. Ordinarily, applied filler material is smoothed after curing, such as by sanding.

FIGS. **12**A-**12**Z show step by step details of the aforementioned method of the invention. FIG. **12**A is a view showing an exemplary embodiment of the fixation base **100** with mouthpiece guide **122** attached thereto. FIG. **12**B is a view showing the fixation base **100** with mouthpiece guide **122** of FIG. **12**A starting to be placed on a patient's teeth. FIG. **12**C a view showing the fixation base **100** with mouthpiece guide **122** of FIG. **12**A properly fitted on a patient's teeth and with holes drilled and hammered in insertion pins **112**. FIG. **12**D a view showing the fixation base **100** once secured having the mouthpiece guide **122** removed by unlocking the pins **106** and removing the mouthpiece guide **122**. FIG. **12**E a view showing teeth being removed. FIG. **12**F a view showing bone being removed using the fixation base **100** with an integrated bone reduction guide so that bone is flush with the fixation base **100**. FIG. **12**G is a view showing the drill guide **124** being attached to the fixation base **100** and FIG. **12**H is another view showing the drill guide **124** attached to the fixation base **100**. FIG. **12**I is a view showing holes being drilled and setting implants, with the location, depth, and angles being managed through the drill guide **124** and drill kit (not shown). FIG. **12**J is a view showing the drill guide **124** and the abutment guide (also sometimes called abutment jig) **136** being attached to the fixation base **100**, and FIG. **12**K is a view showing the abutment guide **136** mounted to the fixation base **100** via locking pins **106**. FIG. **12**L is a view showing the abutments **18** being attached to implants **16** via holes **160** in the abutment guide **136**. FIG. **12**M is a view showing a notch **144** in the hole where attachment screws are located to ensure proper positioning of the abutments. FIG. **12**N is a view showing copings **20** being attached to abutments **18**. FIG. **12**O is a view showing test fitment of the prosthesis **10** and then removal. FIG. **12**P is a view showing the prosthesis **10** mounted to the abutment guide **136** and screwing in the prosthesis **10** to the abutments via the copings **20**. FIG. **12**Q is a view showing inserting epoxy to fuse the prosthesis **10** to the copings **20**. FIG. **12**R is a view showing unscrewing the prosthesis **10** from the abutments **18**. FIG. **12**S is another view showing the prosthesis **10** being removed from the abutments **18**. FIG. **12**T is a view showing epoxy fusing the copings **20** to the prosthesis **10**. FIGS. **12**U and **12**V are views showing the abutment guide **136** being removed from the fixation base **100**. FIG. **12**W is a view showing the abutments **18** properly set and the fixation base removed. FIG. **12**X is a view showing the fixation base removed and with the gums being sutured together around the abutments **18**. FIG. **12**Y is a view showing the prosthesis **10** being reinserted and mounted to the abutments **18** via screws thought the copings **20**. Lastly, FIG. **12**Z is a view showing the prosthesis **10** being mounted. While the present invention has been described in connection with what is considered the most practical and preferred embodiment, it is to be understood that the present invention is not to be limited to the disclosed arrangements, but is intended to cover various arrangements which are included within the spirit and scope of the broadest possible interpretation of the appended claims so as to encompass all modifications and equivalent arrangements which are possible.

While the present invention has been described in connection with what is considered the most practical and preferred embodiment, it is to be understood that the present

invention is not to be limited to the disclosed arrangements, but is intended to cover various arrangements which are included within the spirit and scope of the broadest possible interpretation of the appended claims so as to encompass all modifications and equivalent arrangements which are possible.

I claim:

1. A method of installing a multi-tooth dental prosthesis in a maxillary or mandibular position in a mouth of a patient, the method comprising:

providing a dental prosthesis for the maxillary or mandibular positioning in the patient's mouth,

utilizing a fixation base to serve as a mounting jig for a plurality of other dental guides comprising a first dental guide and a second dental guide, wherein the fixation base comprises a generally arcuate shape with a front surface that has a plurality of openings through which fasteners can be passed, a rear surface, and a horizontal surface;

utilizing the first dental guide, wherein the first dental guide is a mouthpiece that attaches to the fixation base and configured and dimensioned to surround at least a portion of the teeth of the patient and is used to assure appropriate location to attach the fixation base to the maxillary or mandibular bone tissue of said patient;

installing the fixation base to the maxillary or mandibular bone tissue of said patient;

removing the mouthpiece from the installed fixation base;

removing at least one of natural teeth, dental fixtures, and obstructive mouth tissues from the work site, to expose an underside of the maxillary or mandibular bone tissue;

recontouring the bone tissue;

utilizing the second dental guide, wherein the second dental guide is a drill guide that attaches to the installed fixation base to assure appropriate location and orientation of holes to be drilled for the subsequently installed implants;

drilling the implant holes in the bone tissue using the drill guide attached to the fixation base;

installing implants in the implant holes;

installing the abutments to the implants; and,

installing said dental prosthesis to the abutments.

2. The method of claim **1**, wherein installing the fixation base to maxillary or mandibular bone tissue of the patient further comprises driving fasteners through the fixation base into the bone tissue to secure the fixation base to the maxillary or mandibular bone.

3. The method of claim **1**, wherein the step of recontouring the bone tissue comprises using a preformed surface on the installed fixation base to assure proper recontouring of the bone tissue.

4. The method of claim **1**, wherein the step of recontouring the bone tissue comprises utilizing an additional guide apparatus, wherein the additional guide apparatus is a bone reduction guide that attaches to the installed fixation base to assure proper recontouring of the bone tissue.

5. The apparatus of claim **1**, further comprising the step of:

utilizing a third dental guide, wherein the third dental guide is an abutment guide base that attaches to the installed fixation base to assure appropriate location for the installed abutments.

6. The method of claim **5**, wherein installing the abutments includes adjusting the abutments to appropriate angular orientations relative to a central axis of associated implants using pre-established indicators on the abutment guide base.

7. An apparatus for installing a dental prosthesis to maxillary or mandibular jaw bone of a patient, the apparatus comprising:

a fixation base for providing an attachment surface for a dental guide used during a dental prosthesis installation procedure, the fixation base further comprising a generally arcuate base member with a front surface that includes a plurality of openings through which fasteners can be passed, a rear surface, and a horizontal surface; and

a first dental guide, wherein the first dental guide is a mouthpiece configured and dimensioned to surround at least a portion of the teeth of the patient and to attach to the fixation base and to be removed after the fixation base is affixed to the maxillary or mandibular bone structure of a patient.

8. The apparatus of claim **7**, wherein the attachment surface of the fixation base includes:

a plurality of slots in said horizontal surface of said fixation base for accepting tabs located on the dental guide; and

bores and bosses extending radially from the front surface of said fixation base.

9. The apparatus of claim **7**, wherein the attachment surface of the fixation base includes a plurality of slots in the horizontal surface of the fixation base, wherein the dental guide includes a plurality of tabs extending toward and fitting closely with the slots of the fixation base, whereby the dental guide engages the fixation base by interfit between the slots of the fixation base and the tabs of the dental guide.

10. The apparatus of claim **7**, further comprising a second dental guide attachable to the fixation base, wherein the second dental guide is a drill guide for guiding the drilling of holes for implants, wherein the drill guide includes a plurality of generally vertical bores corresponding in location to and in axial registry with intended implant sites.

11. The apparatus of claim **10**, wherein the drill guide is made from a metal, metallic alloy, composite, polymer, or any other material that is sufficiently strong enough to withstand breakage during a prosthesis installation procedure and comprises a support bar, a plurality of bosses with one boss for each one of the vertical bores, the bosses located rearwardly of the support bar and attached to the support bar by arms such that voids exist between the bosses and the support bar, the voids enabling direct observation of patient anatomy and insertion of irrigation and evacuation apparatus.

12. The apparatus of claim **7**, further comprising a third dental guide attachable to the fixation base, wherein the third dental guide is an abutment guide oriented to receive abutments and guide the abutments for placement against the implants.

13. The apparatus of claim **7**, wherein the fixation base is made from a metal, metallic alloy, composite, polymer, or any other material that is sufficiently strong enough to withstand breakage during a prosthesis installation procedure.

14. The apparatus of claim **7**, wherein the fixation base further comprises a surface to assist in recontouring of bone tissue.

15. The apparatus of claim **7**, further comprising an additional guide apparatus, wherein the additional guide

apparatus is a bone reduction guide that attaches to the installed fixation base to assist in recontouring of bone tissue.

16. The apparatus of claim **7**, further comprising a dental prosthesis, wherein the dental prosthesis attaches to the installed fixation base.

17. A method of installing a fixation base in a maxillary or mandibular position in a mouth of a patient, the method comprising:

utilizing a fixation base for providing an attachment surface for a dental guide used during a dental prosthesis installation procedure, wherein the fixation base comprises a generally arcuate shape with a front surface that has a plurality of openings through which fasteners can be passed through, a rear surface, and a horizontal surface;

utilizing a mouthpiece configured and dimensioned to surround at least a portion of the teeth of the patient;

attaching the mouthpiece to the fixation base;

installing the mouthpiece onto at least some surfaces of the maxillary or mandibular portion of the mouth of the patient to assist in positioning the fixation base appropriately prior to installing the fixation base to maxillary or mandibular bone tissue of the patient;

installing the fixation base to the maxillary or mandibular portions of the patient using fasteners through said plurality of openings in said front surface of the fixation base; and,

removing the mouthpiece from the fixation base.

* * * * *