US010813769B2

(12) **United States Patent**
Orphanos et al.

(10) **Patent No.: US 10,813,769 B2**
(45) **Date of Patent: Oct. 27, 2020**

(54) **BASEPLATE OF A MODULAR SHOULDER JOINT PROSTHESIS AND RELATED METHODS FOR IMPLANTING THE SAME**

(71) Applicant: **DePuy Synthes Products, Inc.**, Raynham, MA (US)

(72) Inventors: **Stephen J. Orphanos**, Bridgewater, MA (US); **Brian Otrando**, Cumberland, RI (US); **William Murphy**, Brockton, MA (US); **Steven Reppucci**, Lakeville, MA (US)

(73) Assignee: **DePuy Synthes Products, Inc.**, Raynham, MA (US)

(*) Notice: Subject to any disclaimer, the term of this patent is extended or adjusted under 35 U.S.C. 154(b) by 132 days.

(21) Appl. No.: **16/044,473**

(22) Filed: **Jul. 24, 2018**

(65) **Prior Publication Data**

US 2020/0030108 A1 Jan. 30, 2020

(51) **Int. Cl.**
A61F 2/40 (2006.01)

(52) **U.S. Cl.**
CPC ***A61F 2/4014*** (2013.01); ***A61F 2/4081*** (2013.01); *A61F 2002/4018* (2013.01)

(58) **Field of Classification Search**
CPC ... A61F 2002/4029–2002/4096; A61F 2/4014; A61F 2/40; A61F 2002/4011; A61F 2002/4018; A61F 2/4003; A61F 2/3609; A61F 2002/30484
See application file for complete search history.

(56) **References Cited**

U.S. PATENT DOCUMENTS

4,045,825	A	9/1977	Stroot
4,045,826	A	9/1977	Stroot
5,314,479	A	5/1994	Rockwood, Jr. et al.
5,358,526	A	10/1994	Tornier
5,728,161	A	3/1998	Camino et al.
5,782,920	A	7/1998	Colleran

(Continued)

FOREIGN PATENT DOCUMENTS

WO 2013/086440 A1 6/2013

OTHER PUBLICATIONS

[No Author Listed] Delta XTEND, Reverse Shoulder System—Surgical Technique, DePuy Synthes, 2017 (66 pages).

(Continued)

Primary Examiner — Alvin J Stewart

(57) **ABSTRACT**

Shoulder joint implants are disclosed herein for use in shoulder reconstruction that are configured to facilitate the inclusion a central bone screw for augmented bone fixation. The implant can include a baseplate (or metaglene) configured to secure a glenosphere or other prosthetic component to the glenoid. To facilitate lateral or proximal insertion of a central bone screw through the implant, a throughbore defined along the central axis of the metaglene can be widened to accommodate the maximum diameter of the screw. To enable fixation of the glenosphere to the metaglene, a collet can be configured to engage the smaller diameter of a glenosphere coupling element and inserted into the central throughbore. The collet and the bone screw can be separate parts, thereby making insertion of the bone screw optional. Alternatively, the collet and bone screw can be integrated together to form a unitary construct.

35 Claims, 19 Drawing Sheets

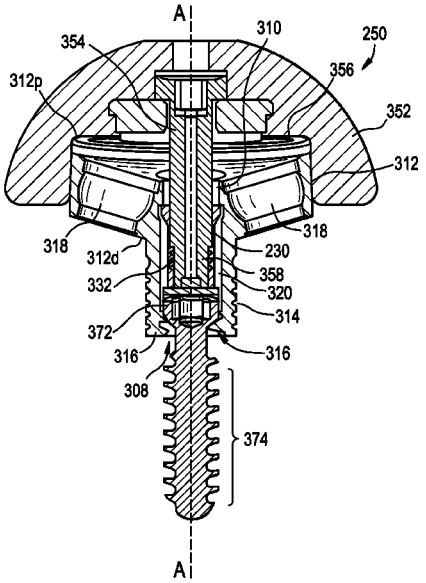

(56) **References Cited**

U.S. PATENT DOCUMENTS

5,876,459 A 3/1999 Powell
5,961,555 A 10/1999 Huebner
6,005,018 A * 12/1999 Cicierega A61F 2/3859 623/20.16
6,033,439 A 3/2000 Camino et al.
6,102,953 A 8/2000 Huebner
6,129,764 A 10/2000 Servidio
6,168,627 B1 1/2001 Huebner
6,168,628 B1 1/2001 Huebner
6,171,342 B1 1/2001 O'Neil et al.
6,193,758 B1 2/2001 Huebner
6,508,840 B1 1/2003 Rockwood, Jr. et al.
6,589,281 B2 7/2003 Hyde, Jr.
6,620,197 B2 9/2003 Maroney et al.
6,723,129 B2 4/2004 Dwyer et al.
6,736,851 B2 5/2004 Maroney et al.
6,783,549 B1 8/2004 Stone et al.
6,863,690 B2 3/2005 Ball et al.
6,953,478 B2 * 10/2005 Bouttens A61F 2/4637 623/19.11
6,969,406 B2 * 11/2005 Tornier A61F 2/4637 623/19.13
6,984,248 B2 1/2006 Hyde, Jr.
6,986,790 B2 1/2006 Ball et al.
7,011,686 B2 3/2006 Ball et al.
7,044,973 B2 5/2006 Rockwood, Jr. et al.
7,169,184 B2 * 1/2007 Dalla Pria A61F 2/4081 623/19.12
7,198,642 B2 4/2007 Hazebrouck et al.
7,297,163 B2 11/2007 Huebner
7,338,498 B2 3/2008 Long et al.
7,527,631 B2 5/2009 Maroney et al.
7,608,109 B2 * 10/2009 Dalla Pria A61F 2/30721 623/19.11
7,611,539 B2 * 11/2009 Bouttens A61F 2/4637 623/19.11
7,615,080 B2 11/2009 Ondrla
7,753,959 B2 7/2010 Berelsman et al.
7,854,768 B2 12/2010 Wiley et al.
7,918,892 B2 4/2011 Huebner
8,002,838 B2 * 8/2011 Klotz A61F 2/4637 623/19.14
8,070,755 B2 12/2011 Maroney et al.
8,070,820 B2 * 12/2011 Winslow A61F 2/40 623/19.11
8,192,497 B2 6/2012 Ondrla
8,273,093 B2 9/2012 Klotz et al.
8,303,665 B2 * 11/2012 Tornier A61F 2/30734 623/19.11
8,419,798 B2 4/2013 Ondrla et al.
8,425,614 B2 4/2013 Winslow et al.
8,460,390 B2 * 6/2013 Biss A61F 2/4014 623/19.14
8,591,592 B2 11/2013 Dreyfuss
8,632,597 B2 * 1/2014 Lappin A61F 2/4081 623/19.11
8,689,425 B2 4/2014 Mutchler et al.
8,702,762 B2 4/2014 Jacene et al.
8,814,943 B2 8/2014 Long et al.
8,920,508 B2 * 12/2014 Iannotti A61F 2/4081 623/19.11
8,940,054 B2 1/2015 Wiley et al.
8,945,138 B2 2/2015 Klotz et al.
8,968,410 B2 * 3/2015 Veronesi A61F 2/4081 623/19.13
9,044,330 B2 6/2015 Chavarria et al.
9,107,758 B2 8/2015 Long et al.
9,283,075 B2 3/2016 Wiley et al.
9,351,743 B2 5/2016 Kehres et al.
9,421,105 B2 8/2016 Metcalfe et al.
9,421,106 B2 8/2016 Splieth et al.
9,433,508 B2 9/2016 Phipps
9,445,911 B2 9/2016 Long et al.
9,498,344 B2 11/2016 Hodorek et al.
9,597,190 B2 3/2017 Chavarria et al.
9,610,165 B2 4/2017 Poncet et al.
9,629,724 B2 4/2017 Lappin
9,629,725 B2 * 4/2017 Gargac A61F 2/4081
9,668,873 B2 6/2017 Winslow et al.
9,763,798 B2 9/2017 Chavarria et al.
9,770,334 B2 9/2017 Wiley et al.
10,064,734 B2 * 9/2018 Burkhead, Jr. A61F 2/4081
10,383,735 B2 * 8/2019 Wiley A61F 2/40
2002/0004685 A1 * 1/2002 White A61F 2/30734 623/23.15
2003/0139818 A1 * 7/2003 Rogers A61F 2/4059 623/23.47
2003/0149485 A1 * 8/2003 Tornier A61F 2/30721 623/18.11
2004/0193278 A1 9/2004 Maroney et al.
2005/0004679 A1 * 1/2005 Sederholm A61F 2/36 623/22.42
2005/0033443 A1 * 2/2005 Blatter A61F 2/4014 623/19.14
2007/0100458 A1 * 5/2007 Dalla Pria A61F 2/30721 623/19.13
2007/0112430 A1 5/2007 Simmen et al.
2008/0208348 A1 8/2008 Fitz
2008/0294268 A1 11/2008 Baum et al.
2009/0171462 A1 7/2009 Poncet et al.
2009/0192621 A1 * 7/2009 Winslow A61F 2/40 623/19.14
2009/0254188 A1 10/2009 Maroney et al.
2010/0161066 A1 6/2010 Iannotti et al.
2011/0106267 A1 5/2011 Grant
2012/0239051 A1 * 9/2012 De Wilde A61F 2/4081 606/96
2012/0253467 A1 10/2012 Frankle
2013/0066433 A1 * 3/2013 Veronesi A61F 2/4081 623/19.13
2013/0150972 A1 * 6/2013 Iannotti A61F 2/4081 623/18.11
2013/0150973 A1 * 6/2013 Splieth A61F 2/4081 623/19.11
2013/0261751 A1 * 10/2013 Lappin A61F 2/4081 623/19.11
2013/0338780 A1 * 12/2013 Berchoux A61F 2/4003 623/19.11
2015/0335440 A1 * 11/2015 Linares A61F 2/40 623/19.12
2016/0030180 A1 * 2/2016 Wecker A61F 2/30 623/18.11
2016/0270922 A1 * 9/2016 Pressacco A61F 2/30749
2017/0042690 A1 2/2017 Burkhead, Jr. et al.
2017/0079803 A1 3/2017 Lang
2017/0100251 A1 * 4/2017 Ek A61F 2/30
2017/0172751 A1 6/2017 Poncet et al.
2017/0181860 A1 6/2017 Nerot et al.
2017/0273800 A1 9/2017 Emerick et al.
2017/0354508 A1 12/2017 Chavarria et al.
2018/0021150 A1 * 1/2018 Harper A61F 2/4081 623/19.11
2018/0161169 A1 * 6/2018 Cardon A61F 2/4081

OTHER PUBLICATIONS

Extended European Search Report for EP Application No. 19188150.7 dated Oct. 23, 2019 (8 pages).

* cited by examiner

FIG. 1A
PRIOR ART

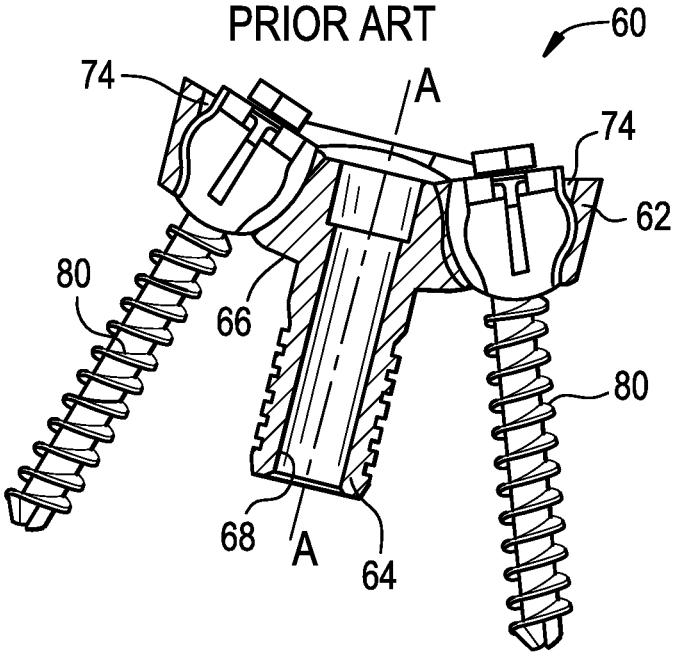

FIG. 1B
PRIOR ART

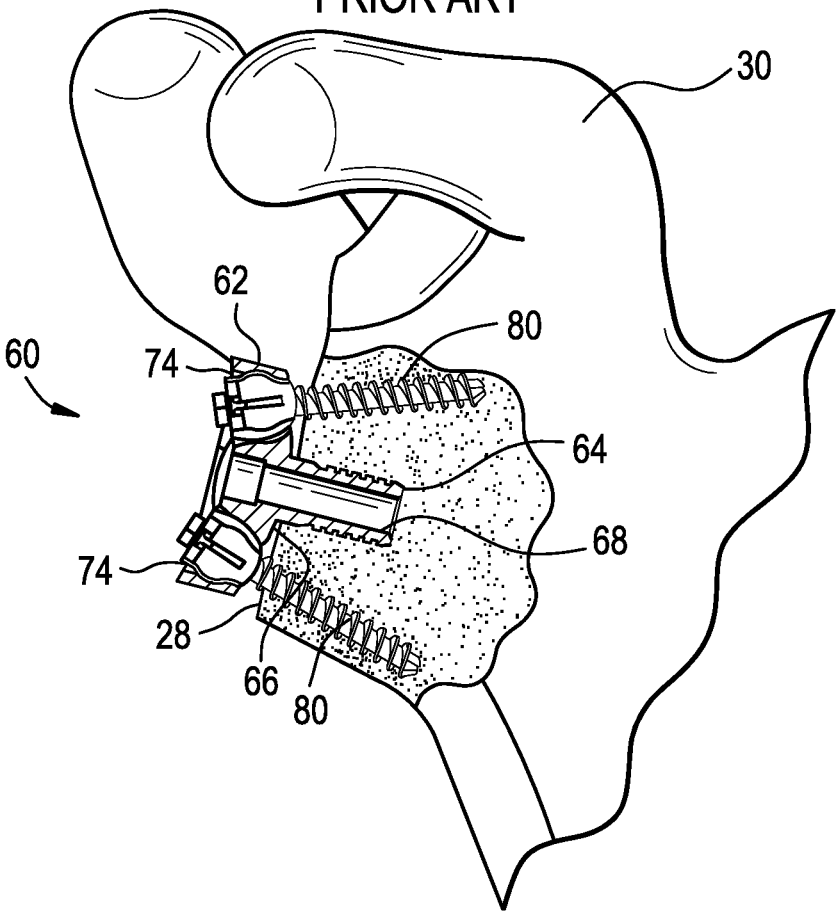

FIG. 2A

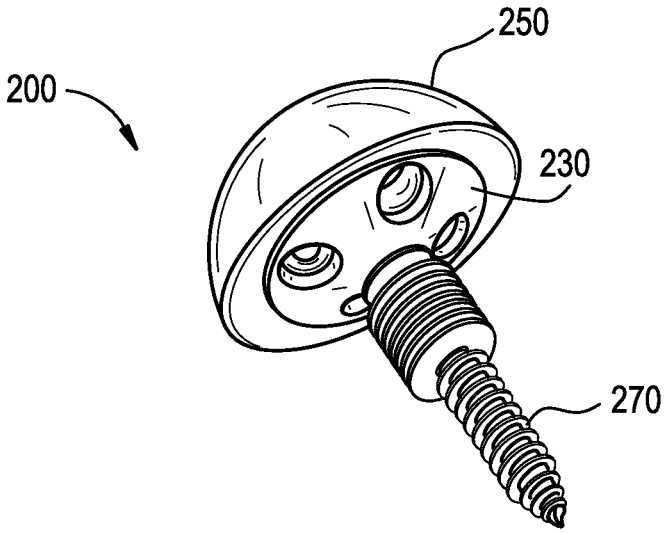

FIG. 2B

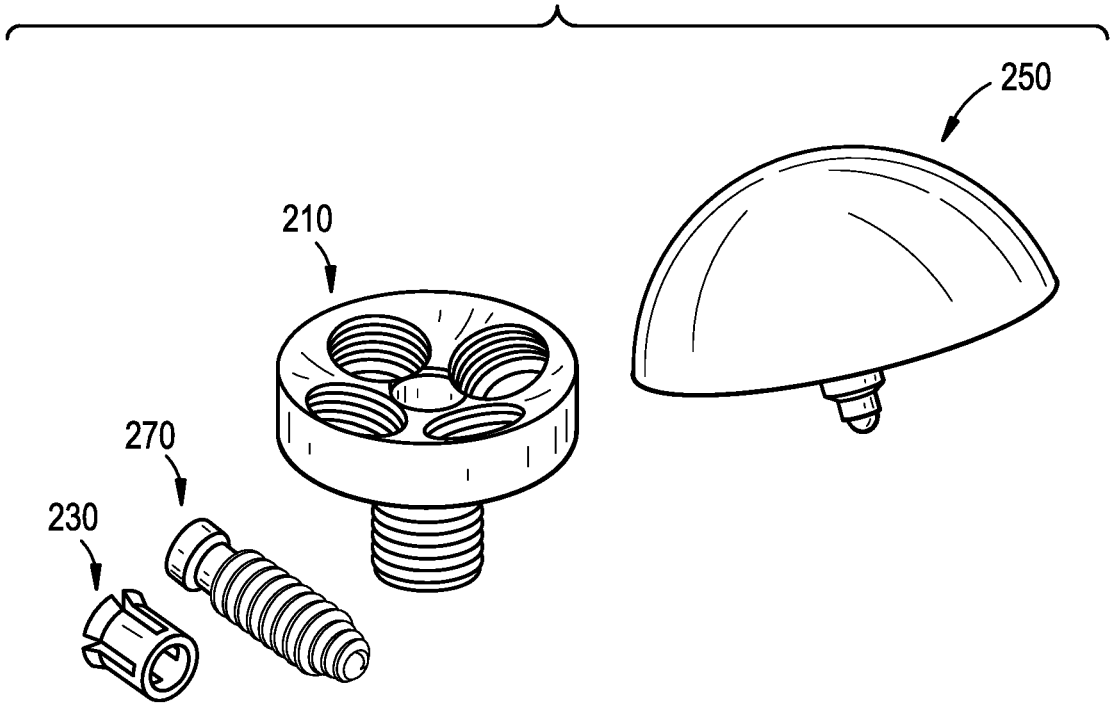

FIG. 3

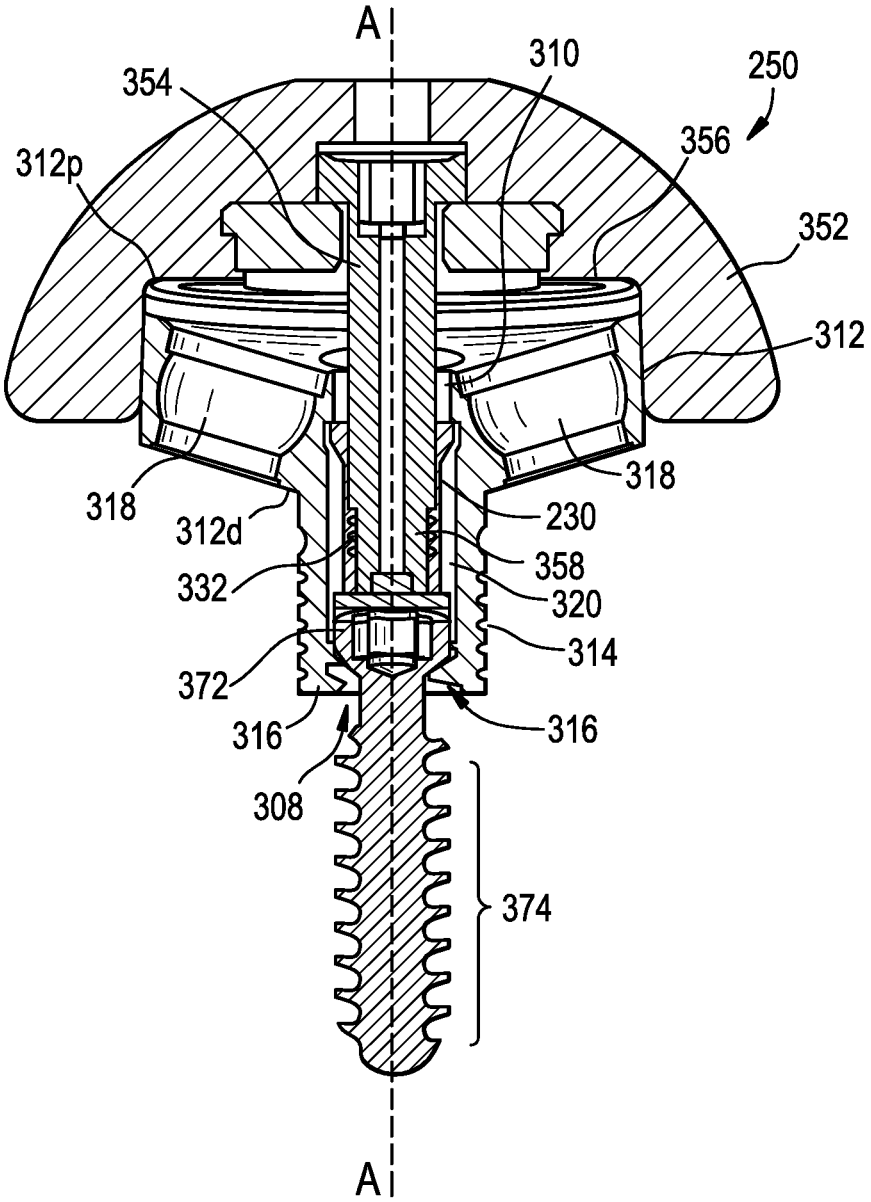
A
310
250
354
356
312p
352
312
318
318
312d
230
332
358
320
314
372
316
316
308
374
A

FIG. 4A

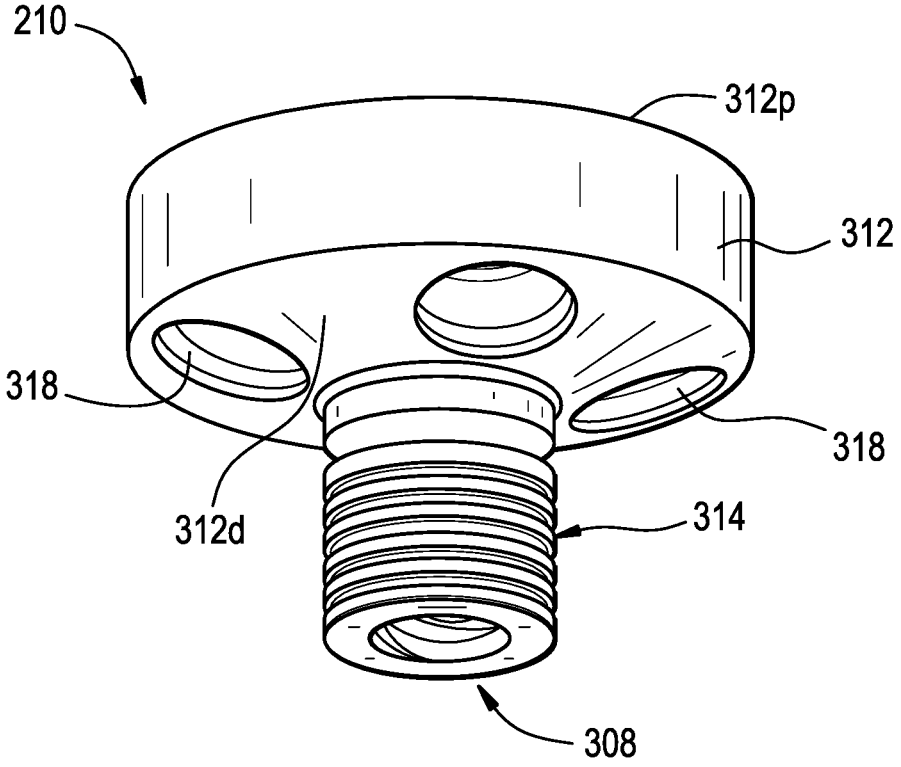

FIG. 4B

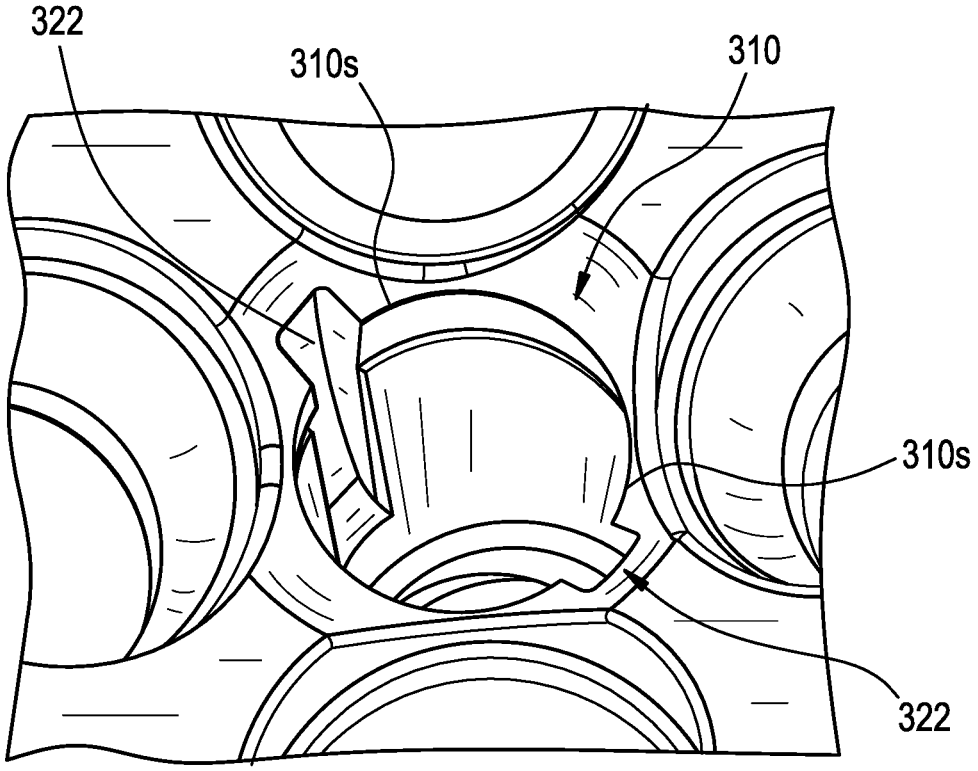

FIG. 4C

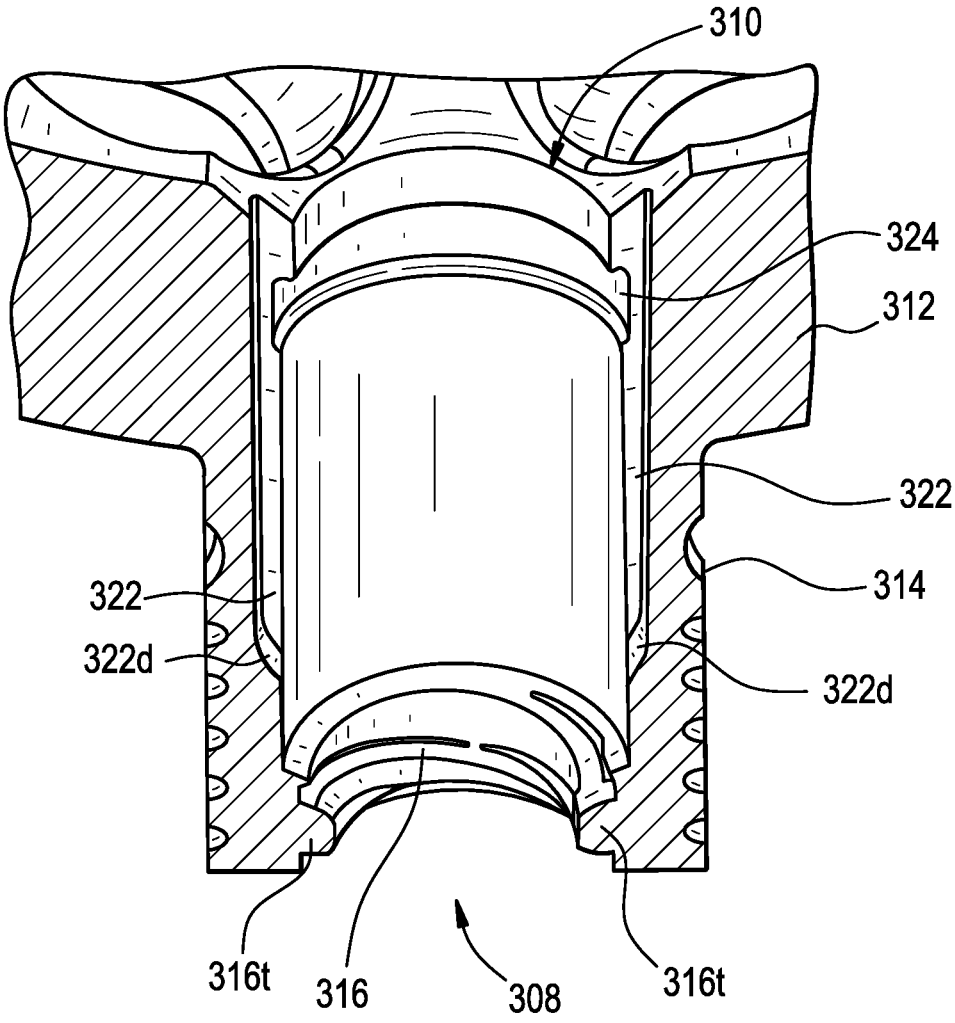

FIG. 5

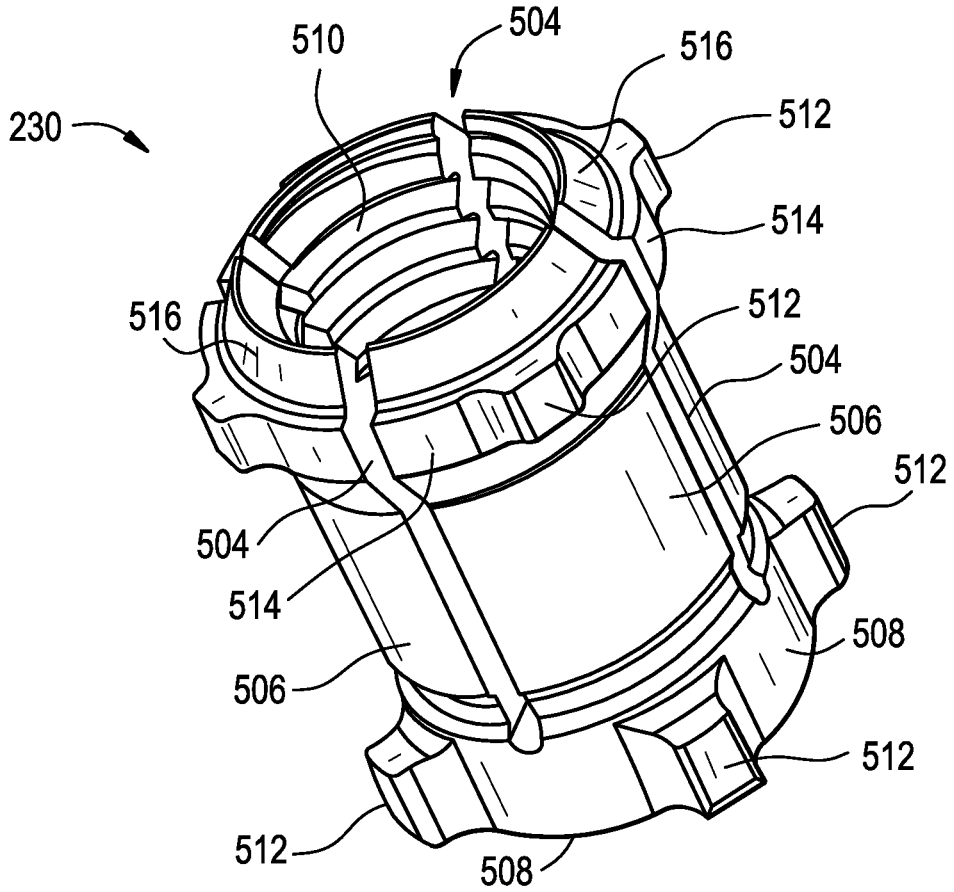
230
510
504
516
512
514
516
512
504
506
512
504
514
508
506
512
512
508

FIG. 6A

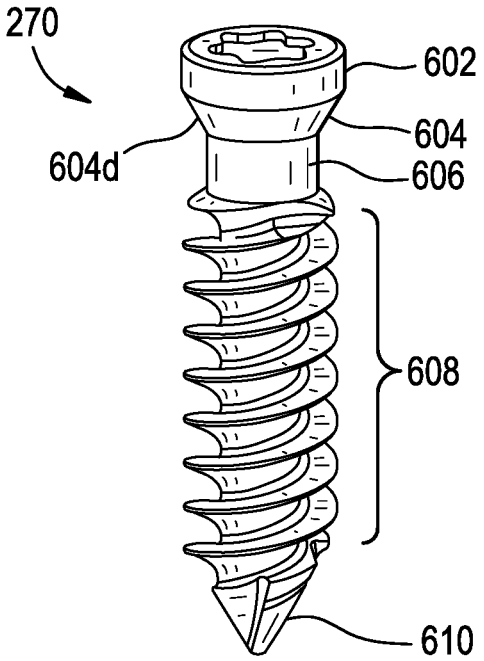
270
602
604
604d
606
608
610

FIG. 6B

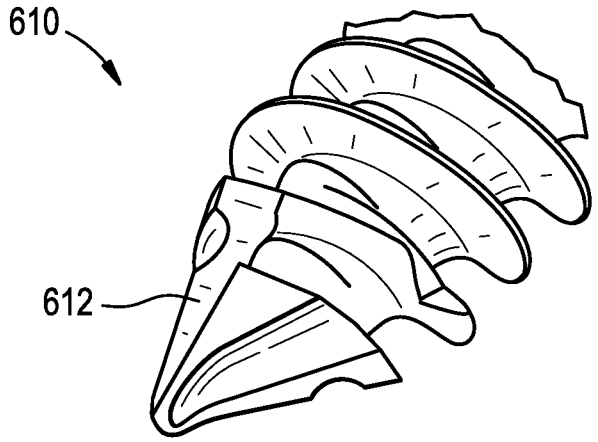

FIG. 6C

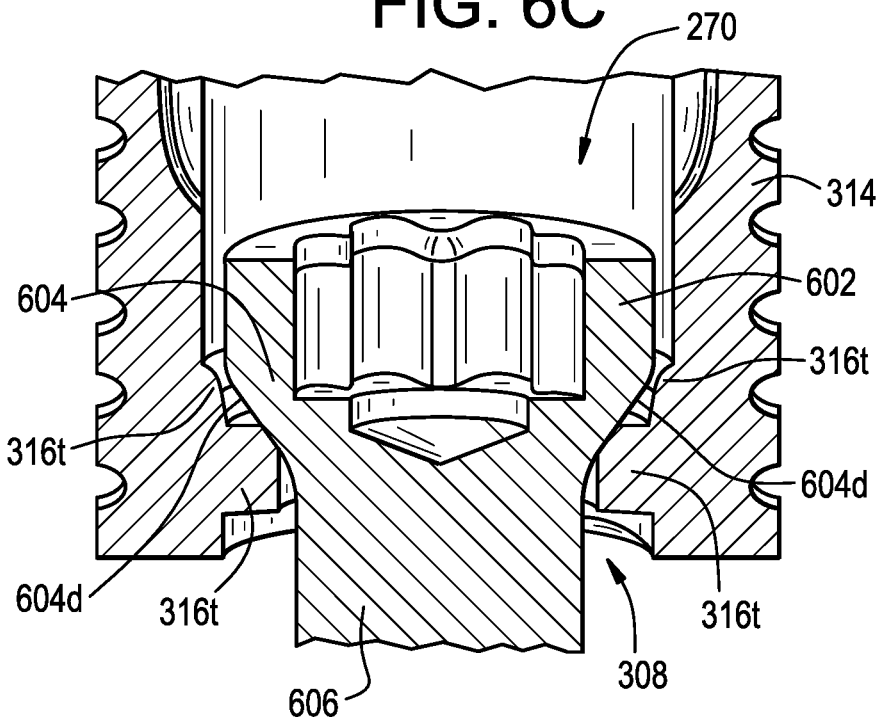

FIG. 7

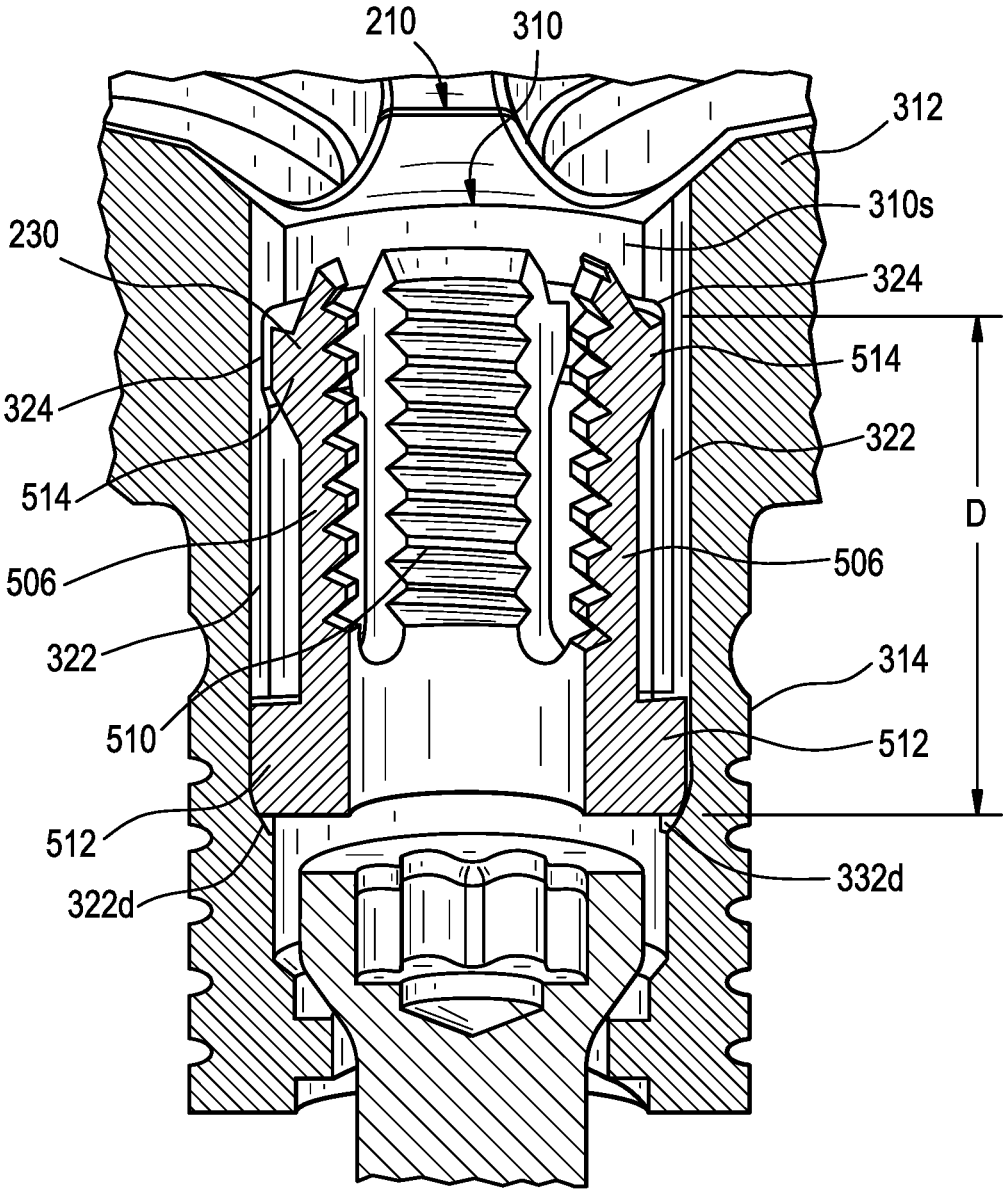
210
310
312
310s
230
324
514
324
514
322
506
D
506
322
314
510
512
512
332d
322d

FIG. 8

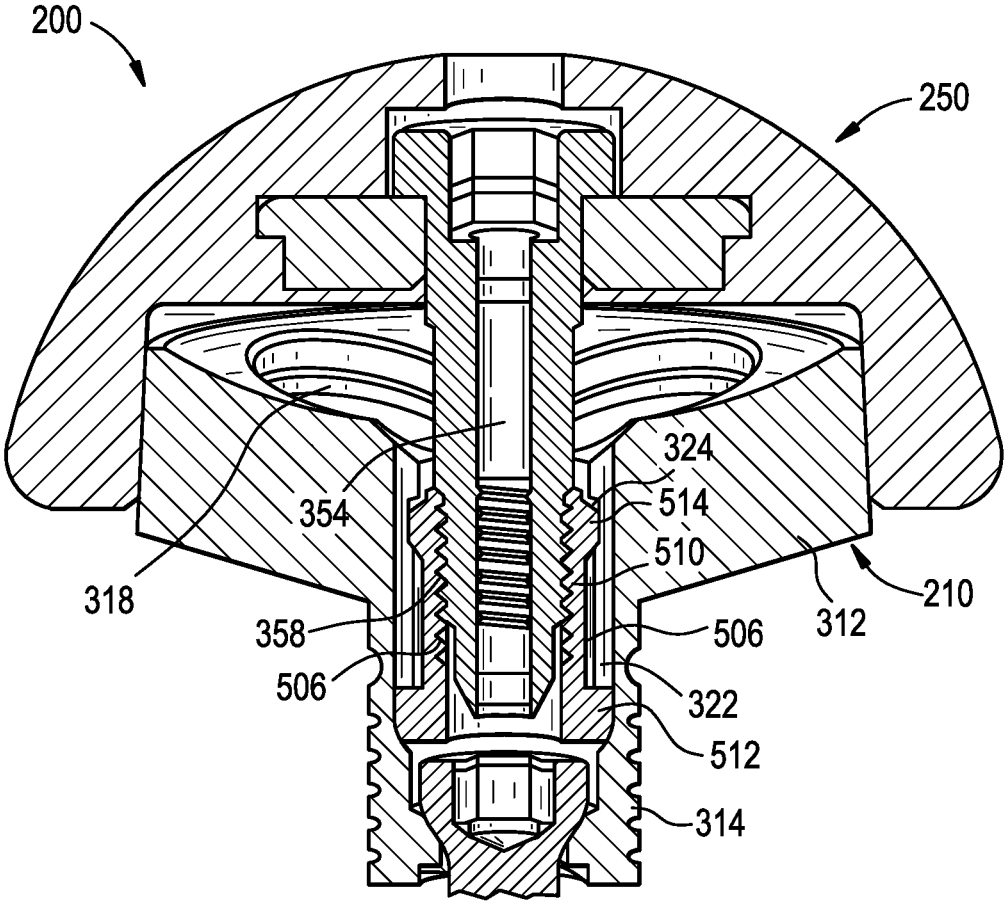

FIG. 9

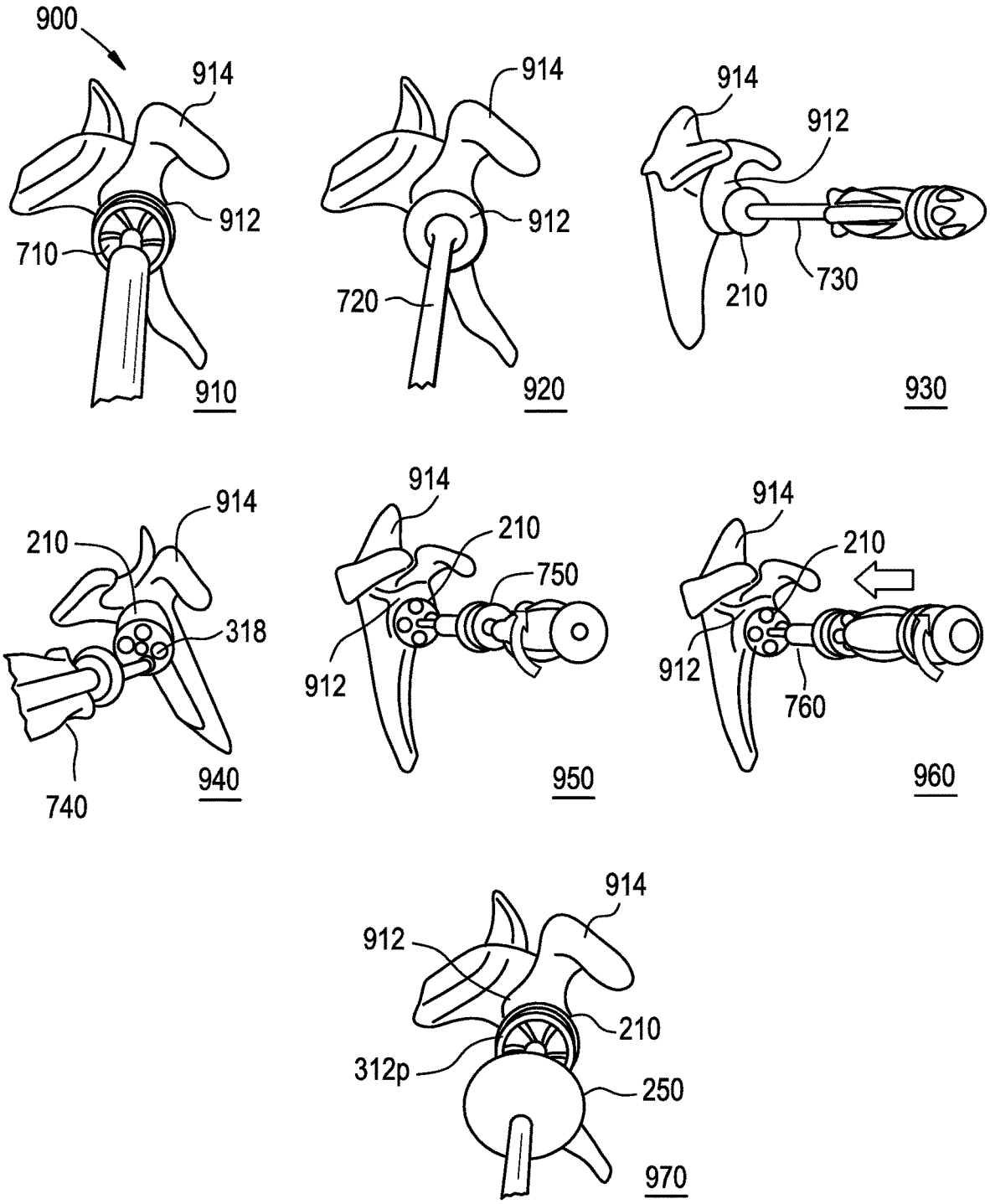
900
914
912
710
910
914
912
720
920
914
912
210
730
930
914
210
318
740
940
914
210
750
912
950
914
210
912
760
960
914
912
210
312p
250
970

FIG. 10A

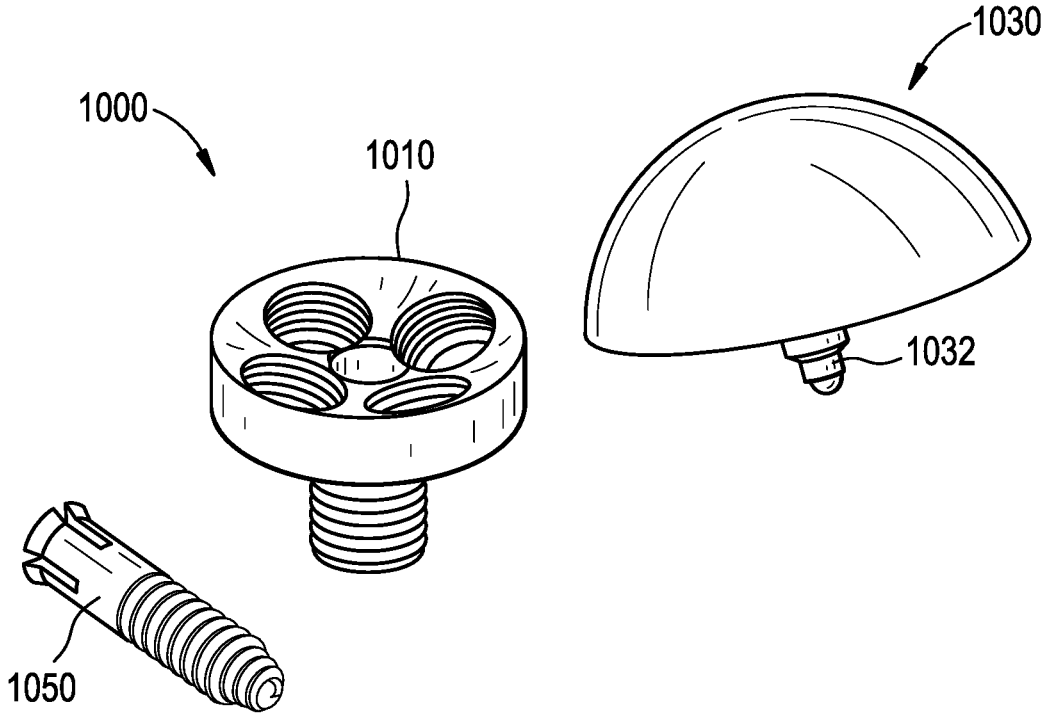

FIG. 10B

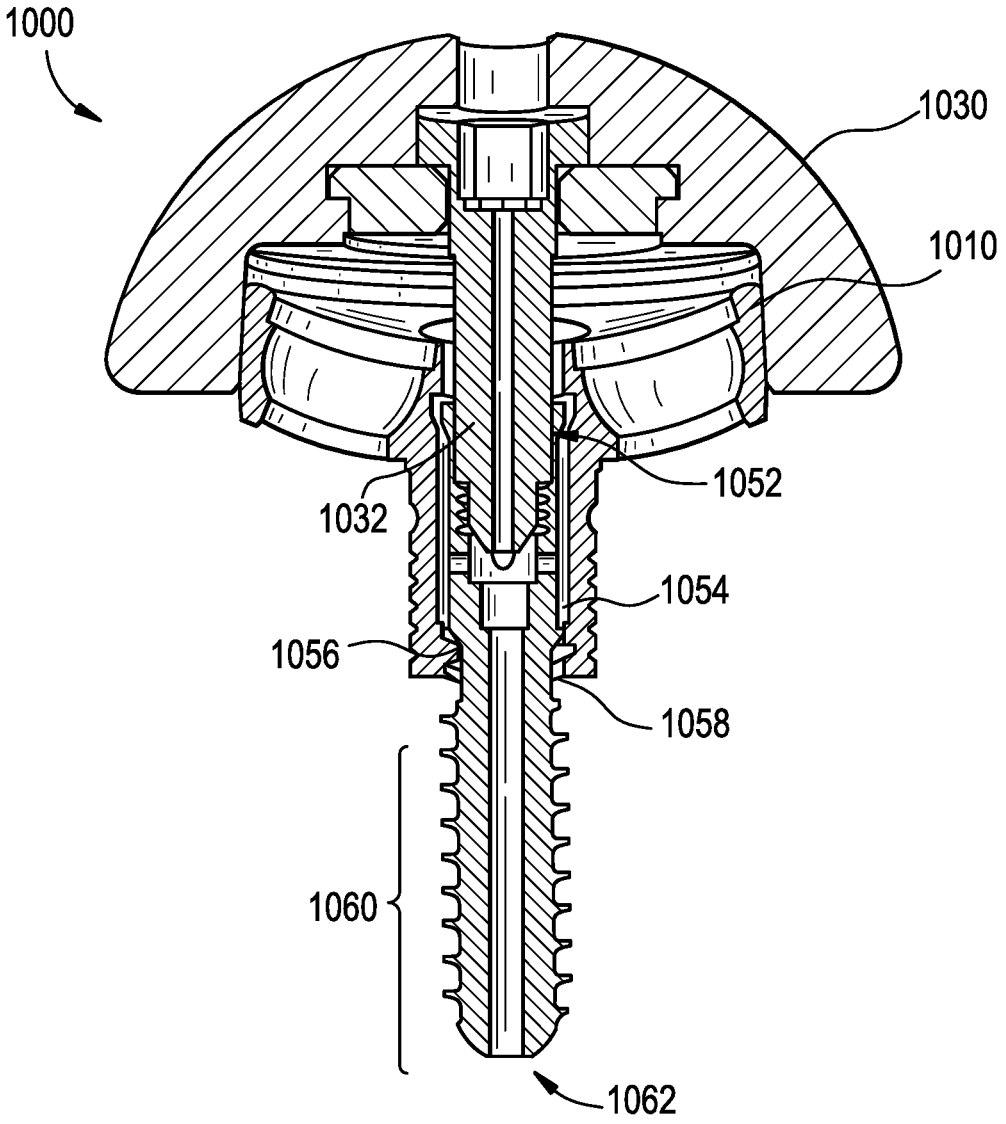

FIG. 10C

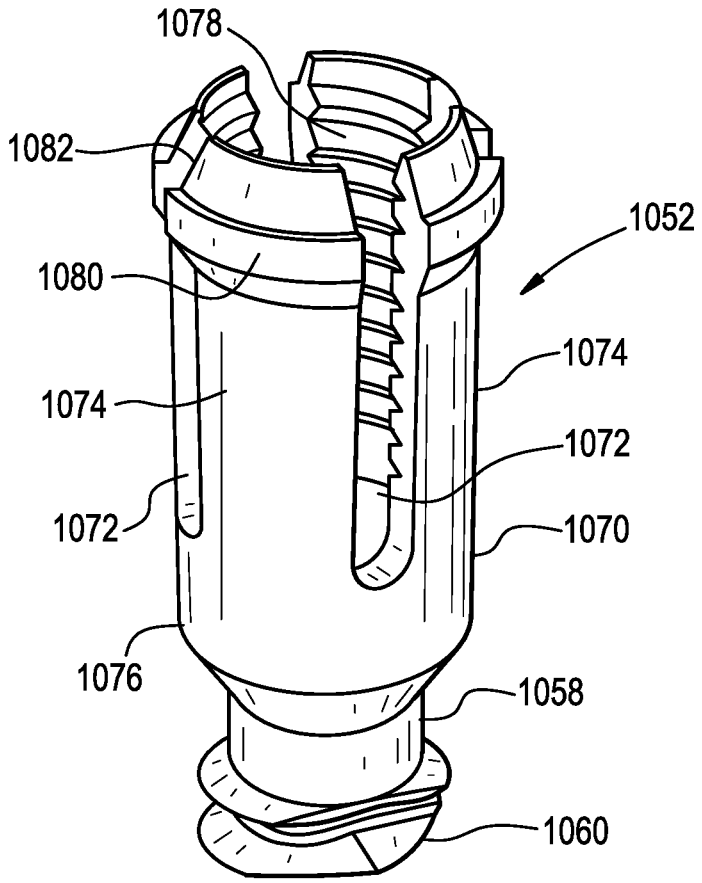

FIG. 11

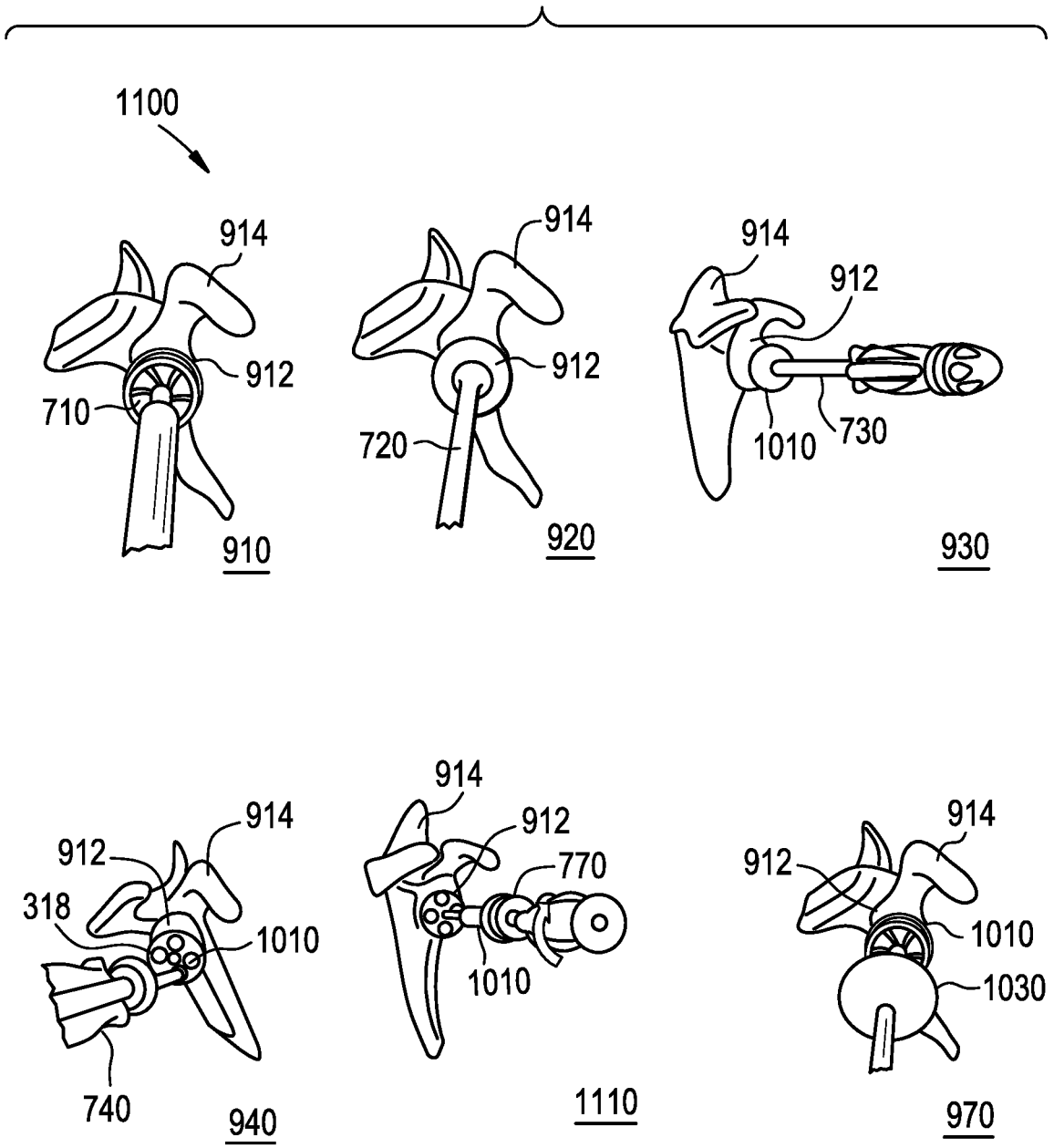
1100
914
912
710
910
914
912
720
920
914
912
1010
730
930
914
912
318
1010
740
940
914
912
770
1010
1110
914
912
1010
1030
970

FIG. 12A

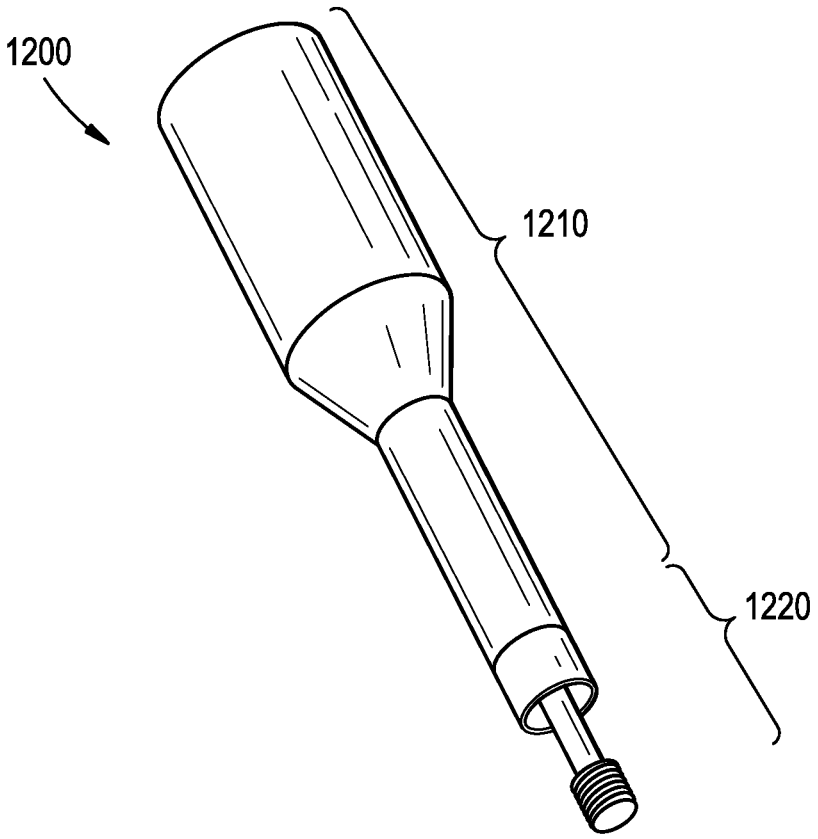

FIG. 12B

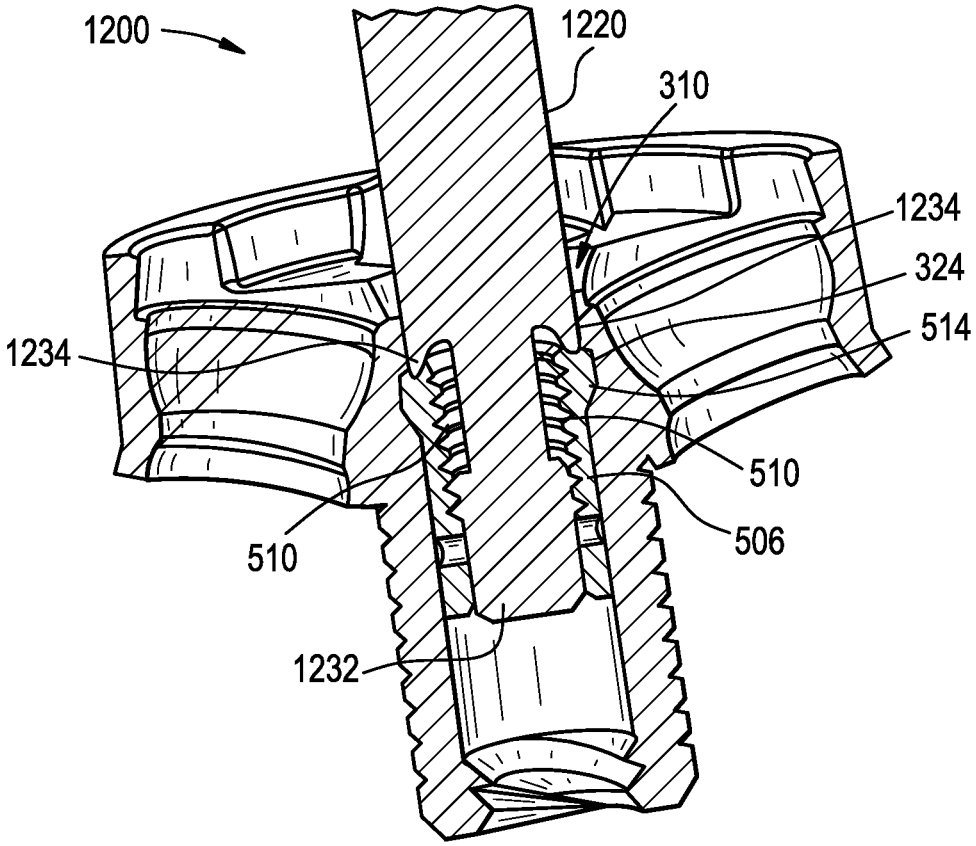

FIG. 12C

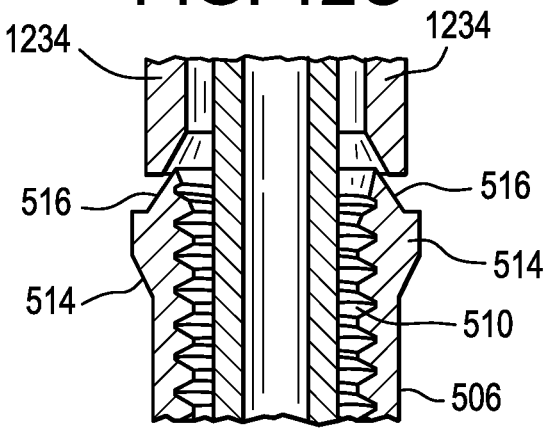

FIG. 13A

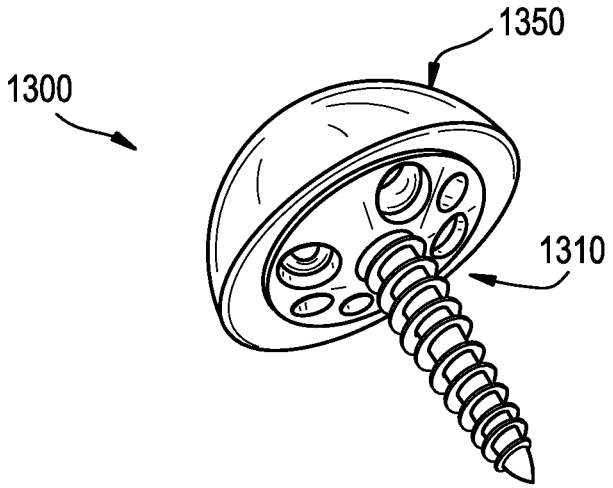

FIG. 13B

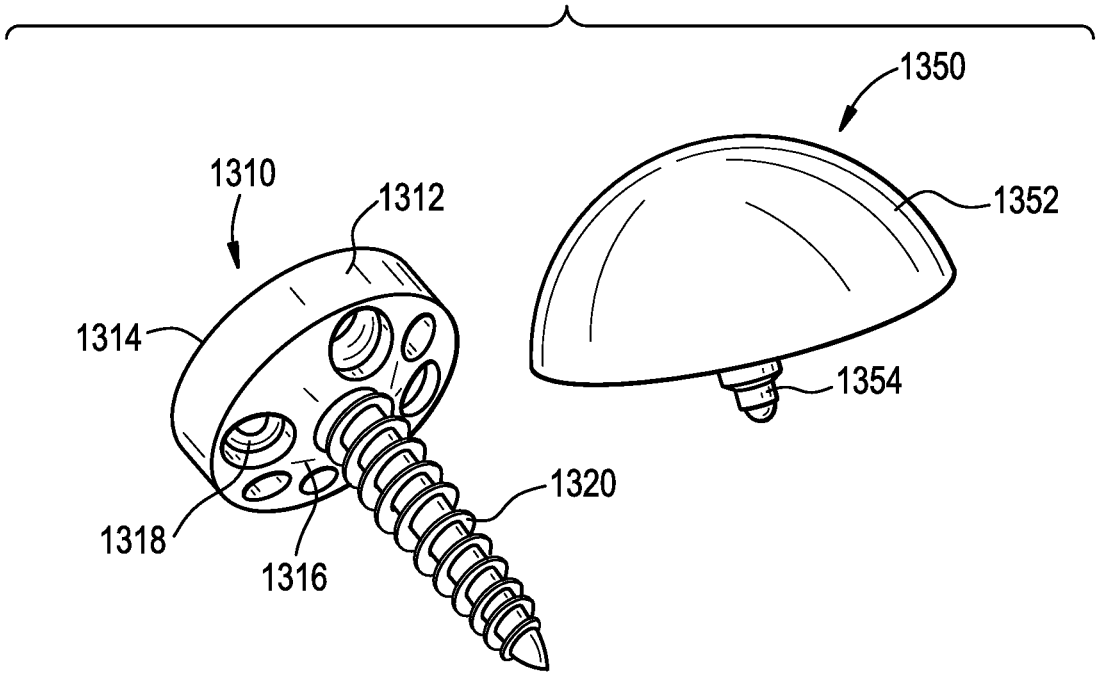

FIG. 14

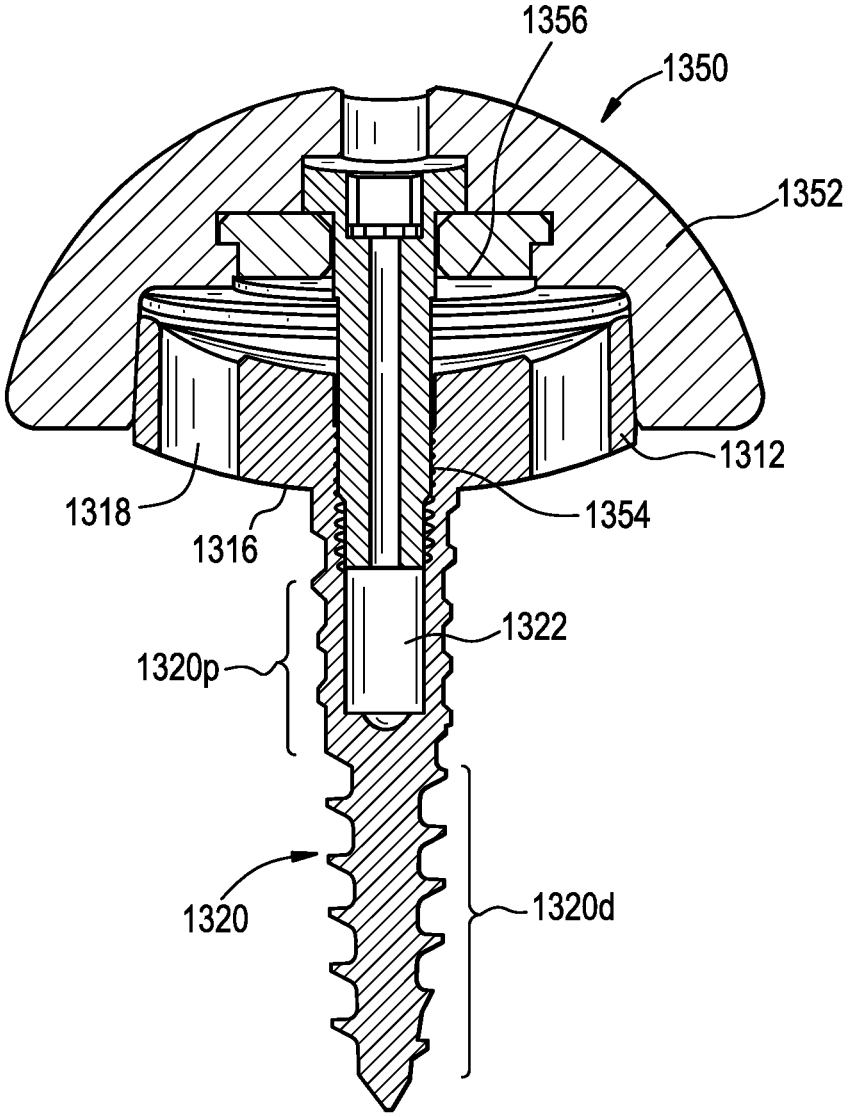

FIG. 15

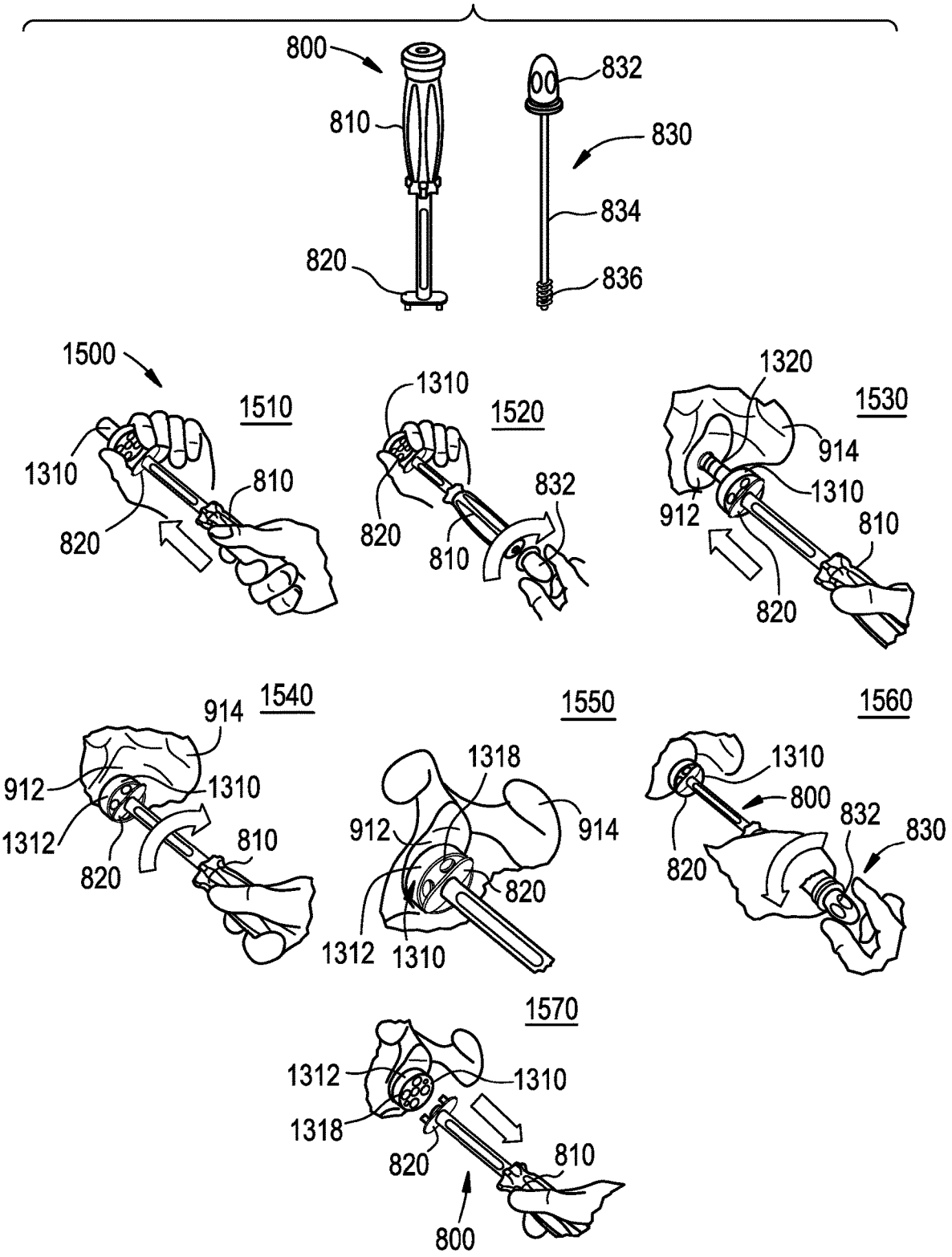
800
810
820
832
830
834
836
1500
1510
1310
810
820
1520
1310
820
810
832
1530
1320
914
1310
912
810
820
1540
914
912
1310
1312
820
810
1550
1318
912
914
820
1312
1310
1560
1310
800
832
830
820
1570
1312
1310
1318
820
810
800

BASEPLATE OF A MODULAR SHOULDER JOINT PROSTHESIS AND RELATED METHODS FOR IMPLANTING THE SAME

FIELD

The present disclosure relates generally to orthopedic implants, and more particularly to a baseplate of a modular shoulder joint prosthesis and related methods of implanting the baseplate into a patient's scapula.

BACKGROUND

During the lifetime of a patient, it may be necessary to perform a total shoulder replacement procedure on the patient as a result of disease or trauma, for example. In a total shoulder replacement procedure, a humeral prosthesis is used to replace the natural head of the patient's humerus. The humeral prosthesis typically includes an elongated post component that is implanted into the intramedullary canal of the patient's humerus and a hemispherically-shaped prosthetic head component that is secured to the post component. In such a total shoulder replacement procedure, the natural glenoid surface of the scapula is resurfaced or otherwise replaced with a glenoid component that provides a bearing surface upon which the prosthetic head component of the humeral prosthesis articulates.

However, in some cases the patient's natural shoulder, including its soft tissue, has degenerated to a severe degree of joint instability and pain. In many such cases, it can be necessary to change the mechanics of the shoulder. Reverse shoulder implants can be used to do so. As its name suggests, a reverse shoulder implant reverses the anatomy, or structure, of the healthy shoulder. In particular, a reverse shoulder implant is designed such that the prosthetic head (i.e., the "ball" in the ball-and-socket joint), known as a glenosphere component, is secured to the patient's scapula, with the corresponding concave bearing (i.e., the "socket" in the ball-and-socket joint), known as a humeral cup, being secured to the patient's humerus. Such a reverse configuration allows the patient's deltoid muscle, which is one of the larger and stronger shoulder muscles, to raise the arm.

To secure the glenosphere component to the patient's scapula, a baseplate, sometimes referred to as a metaglene component, can be implanted onto the glenoid of the patient's scapula. For example, as shown in FIGS. **1**A and **1**B, a shoulder joint implant includes a metaglene component **60** that includes a platform **62** having a post **64** extending outwardly from its distal surface **66**. The post **64** has a bore **68** formed about a central axis A-A of the metaglene component **60** and is configured to engage a locking screw or other coupling element protruding from a distal surface of a glenosphere component (not shown). The bore **68** extends through the entire length of the post **64**. The post **64** of the metaglene component **60** is designed to be implanted into a void formed in a glenoid surface **28**. Bone screws **80** can be positioned in some or all of the screw holes or apertures **74** and driven into, or otherwise secured to, the bone tissue of a patient's scapula **30**, thereby fixing the metaglene component **60** in place.

In some challenging clinical situations, such as poor bone quality or anatomic limitations, it can be useful to drive a bone screw into the glenoid through the central bore **68** of the metaglene component **60**. However, when the proximal width or diameter of the bore **68** is smaller than the width or diameter of the head of the screw, the surgeon may be prevented from inserting the screw through the bore using a

top-down or lateral approach (i.e., distally inserting the screw from the proximal end of the metaglene component), thereby increasing the complexity of the surgical procedure. Although the proximal diameter of the bore **68** can be widened to accommodate the screw diameter, such widening can cause backward incompatibility with glenoid/glenosphere components having coupling elements with narrower widths.

Accordingly, there is a need for improved metaglene components that, for example, facilitate use of a central screw, and related methods for implanting the various embodiments of a metaglene component provided for herein, or otherwise derivable from the present disclosures, in a scapula of a patient with (or without) a central screw in a manner that maintains backward compatibility with standard glenoid/glenosphere components.

SUMMARY

The present disclosure is generally related to shoulder joint implants, and represents improvements over existing designs of such implants. These implants are often used in reverse shoulder procedures. Typically the shoulder joint implant includes a baseplate, sometimes referred to herein as a metaglene component (or metaglene). The base plate that is configured to secure a glenosphere component (or glenosphere) to the bony anatomy of the glenoid to complete the repair. As discussed in greater detail below, other components that can engage with the baseplate and/or the glenosphere component can include a collet and/or a bone screw, and in some such instances the collet and bone screw can form a singular component of the implant. The provided for embodiments can allow for backwards compatibility amongst the components of the implant, and also allow for surgeons to select a variety of different configuration types for the implant based, at least in part, on the needs and anatomy of the patient and the preferences of the particular surgeon. For example, some configurations that include a collet can allow a bone screw to be omitted from the implant, while some other configurations that include a collet and bone screw coupled together in a single, unitary component can reduce the number of steps performed during a procedure, thereby simplifying the procedure.

In one exemplary embodiment of a shoulder joint implant, the implant includes a first prosthetic component, a baseplate, and a removable collet. The first prosthetic component includes a coupling element that protrudes from a distal bearing surface of the prosthetic component. The baseplate is configured to secure the first prosthetic component to bone, and includes a post that protrudes from a distal bearing surface of the baseplate. The post defines a throughbore that extends along a proximal-distal axis of the post. The removable collet is disposed within the throughbore, and is configured to engage the coupling element of the first prosthetic component such that the first prosthetic component is fixedly coupled to the baseplate.

In some embodiments, the first prosthetic component is a glenosphere component having an integrated locking screw protruding from a distal bearing surface of the glenosphere component. The collet can be dimensioned to engage the coupling element, with the coupling element having a diameter that is less than a diameter of the throughbore of the baseplate. Additionally, or alternatively, the collet can include a plurality of proximally-extending arms that are radially compressible to facilitate at least one of insertion and removal of the collet in the throughbore of the baseplate. One or more of the proximally-extending arms can include

a lateral protrusion that is configured to engage an annular recessed portion of an inner sidewall of the throughbore when the arms are not compressed, which in turn can fix the removable collet in place with respect to the first prosthetic component and/or with respect to the baseplate itself at a predetermined depth in the throughbore of the baseplate. Further, one or more of the proximally-extending arms can have a proximal ramped bearing surface that is configured to bear against a counterpart bearing surface of a prosthetic implant tool. The arm(s) can be radially compressed in response to the counterpart bearing surface of the prosthetic implant tool bearing against the proximal ramped bearing surface, thus disengaging the lateral protrusion of the arm(s) from the recessed portion of the inner sidewall of the throughbore. This radial compression feature can be used to facilitate insertion and/or removal of the collet within the throughbore of the baseplate.

In some embodiments, the collet can include one or more keys protruding from one or more of the arms of the collet. The keys of the collet can configured to engage with one or more keyways defined longitudinally along an inner sidewall of the throughbore of the baseplate to align and guide the collet into the baseplate. The keys of the collet can be configured to engage with the keyways defined along the inner sidewall of the throughbore to resist rotation of the collet while disposed within the throughbore of the baseplate. The keys of the collet can be configured to engage with the keyways along the inner sidewall of the throughbore to form a locking mechanism that provides a torsional resistive force that counteracts a torque imparted by the coupling element of the first prosthetic component while screwing the coupling element into the collet to form a taper lock between the first prosthetic component and the baseplate or while unscrewing the coupling element out of the collet to break the taper lock between the first prosthetic component and the baseplate. The length of the keyways can define a distal most depth at which the removable collet can be seated in the throughbore of the baseplate. In some embodiments, the distance between the annular recessed portion and the distal most depth of the keyways can be a predefined distance that is greater than the height of the collet such that the collet bottoms out at the distal end of the one or more keyways while the coupling element of the glenosphere component is unscrewed from the collet.

In some embodiments, the implant can include a bone screw that has a proximal head and a distal threaded portion. In such embodiments, the throughbore of the baseplate can be dimensioned to facilitate insertion of the bone screw that has a diameter that is greater than a diameter of the coupling element of the first prosthetic component. Further, in some such embodiments, the collet can be dimensioned to engage the coupling element, with the coupling element having a diameter that is less than a diameter of the central bone screw. In some instances, the collet and the central bone screw can be separate components. This can result, for example, in a configuration in which the collet is disposed within the throughbore of the baseplate, proximal to the proximal head of the central bone screw. In some such embodiments, the collet can be disposed within the throughbore of the baseplate after the central bone screw is laterally inserted into the throughbore. In some embodiments, the implant can be devoid of a central bone screw.

In instances in which the implant includes a central bone screw that has a proximal head and a distal threaded portion, the collet can be coupled to the proximal head of the central bone screw. Alternatively, or additionally, the proximal head of the central bone screw can include a shoulder portion that is of a spherical and/or conical shape, and an inner sidewall of the throughbore at the distal end of the post can include a threaded sidewall portion that is configured to support the shoulder portion of the central bone screw. In some embodiments that include a central bone screw that has a proximal head and a distal threaded portion, the distal threaded portion of the central bone screw can extend through an opening at the distal end of the post, being configured to secure the baseplate to bone.

One exemplary method of implanting a shoulder prosthetic implant in a scapula of a patient includes reaming a glenoid of a scapula such that a surface of the glenoid is complementary to a distal bearing surface of a baseplate of a prosthetic shoulder implant, drilling a hole into the glenoid to receive a post that protrudes from the distal bearing surface of the baseplate, and disposing the post of the baseplate into the glenoid through the drilled hole. The method further includes securing a plurality of peripheral bone screws into the glenoid through one or more screw holes defined in the baseplate, and laterally inserting a removable collet into a throughbore defined in the baseplate. The throughbore extends along a proximal-distal axis of the baseplate of the post. Still further, the method includes securing a first prosthetic component of the prosthetic shoulder implant onto a proximal bearing surface of the baseplate such that a coupling element protruding from a distal bearing surface of the first prosthetic component is secured to the collet within the throughbore of the baseplate.

The method can further include laterally inserting a central bone screw through the throughbore of the baseplate prior to inserting the removable collet, and securing a distal threaded portion of the central bone screw into the glenoid through an opening at the distal end of the post of the baseplate. The collet can be coupled to a proximal head of a central bone screw and the method can further include laterally inserting the collet and the central bone screw together into the throughbore of the baseplate, and securing a distal threaded portion of the central bone screw into the glenoid through an opening at the distal end of the post of the baseplate.

The throughbore of the baseplate can be dimensioned to facilitate insertion of a central bone screw having a diameter that is greater than a diameter of the coupling element of the first prosthetic component. Further, the collet can be dimensioned to engage the coupling element of the first prosthetic component having a diameter that is less than a diameter of the central bone screw. In some embodiments, the first prosthetic component is a glenosphere component having an integrated locking screw protruding from a distal bearing surface of the glenosphere component.

The removable collet can include a plurality of compressible arms. In some such embodiments, the method can include removing the collet from within the throughbore of the baseplate using a tool by laterally inserting the tool into the throughbore of the baseplate, and rotating a distal end of the tool to engage the threaded portion of the plurality of arms. The method can further include continuing to rotate the distal head until the distal head radially compresses the plurality of arms away from a recessed sidewall portion of the throughbore, and proximally pulling the collet out of the throughbore.

BRIEF DESCRIPTION OF THE DRAWINGS

The accompanying drawings, which are incorporated herein and constitute part of this specification, illustrate exemplary embodiments, and together with the general

description given above and the detailed description given below, serve to explain the features of the various embodiments:

FIG. **1**A is a side, partial cross-sectional view of one example of a shoulder joint implant of the prior art;

FIG. **1**B is a schematic side view of the shoulder joint implant of FIG. **1**A coupled to a scapula;

FIG. **2**A is a perspective view of one exemplary embodiment of a shoulder joint implant;

FIG. **2**B is a perspective exploded view of components of the shoulder joint implant of FIG. **2**A, the components including a metaglene component, a collet, a glenosphere component, and a bone screw;

FIG. **3** is a side, partially transparent view of the shoulder joint implant of FIG. **2**B;

FIG. **4**A is a bottom perspective view of the metaglene component of FIG. **2**B;

FIG. **4**B is a detailed top view of the metaglene component of FIG. **4**A;

FIG. **4**C is a detailed side, cross-sectional view of the metaglene component of FIG. **4**B;

FIG. **5** is a perspective view of the collet of FIG. **2**B;

FIG. **6**A is a side perspective view of the bone screw of FIG. **2**B;

FIG. **6**B is a detailed perspective view of a distal end the bone screw of FIG. **6**A;

FIG. **6**C is a detailed side, cross-sectional view of the metaglene component of FIG. **4**C and a proximal end of the bone screw of FIG. **6**A;

FIG. **7** is a detailed side, cross-sectional view of the metaglene component and the proximal end of the bone screw of FIG. **6**A and the collet of FIG. **5**;

FIG. **8** is a side, cross-sectional view of the metaglene component, proximal end of the bone screw, and the collet of FIG. **7**, and the glenosphere component of FIG. **2**B that includes a locking screw;

FIG. **9** is a schematic illustration of one exemplary embodiment of a method of implanting a shoulder implant like the shoulder implant of FIGS. **2**A-**8**;

FIG. **10**A is a perspective exploded view of another exemplary embodiment of a shoulder joint implant, the implant having components that include a metaglene component, a glenosphere component, and an integrated collet and bone screw;

FIG. **10**B is a side, partially transparent view of the shoulder joint implant of FIG. **10**A;

FIG. **10**C is a detailed perspective view of the integrated collet and bone screw of FIG. **10**A;

FIG. **11** is a schematic illustration of one exemplary embodiment of a method of implanting a shoulder implant like the shoulder implant of FIGS. **10**A-**10**C;

FIG. **12**A is a perspective view of one exemplary embodiment of a collet removal tool;

FIG. **12**B is a side perspective, cross-sectional view of one exemplary embodiment of the collet removal tool of FIG. **12**A being associated with a shoulder joint implant that includes a collet;

FIG. **12**C is a detailed side, partially transparent view of the collet removal tool and collet of FIG. **12**B;

FIG. **13**A is a perspective view of yet another exemplary embodiment of a shoulder joint implant;

FIG. **13**B is a perspective exploded view of components of the shoulder joint implant of FIG. **13**A, the components including a metaglene component having an integrated bone screw and a glenosphere component;

FIG. **14** is a side, partially transparent view of the shoulder joint implant of FIG. **13**B; and

FIG. **15** is a schematic illustration of one exemplary embodiment of a method of implanting a shoulder joint implant like the shoulder implant of FIGS. **13**A and **13**B.

DETAILED DESCRIPTION

Certain exemplary embodiments will now be described to provide an overall understanding of the principles of the structure, function, manufacture, and use of the devices and methods disclosed herein. One or more examples of these embodiments are illustrated in the accompanying drawings. Those skilled in the art will understand that the devices and methods specifically described herein and illustrated in the accompanying drawings are non-limiting exemplary embodiments and that the scope of the present disclosure is defined solely by the claims. The features illustrated or described in connection with one exemplary embodiment may be combined with the features of other embodiments. Such modifications and variations are intended to be included within the scope of the present disclosure. Sizes and shapes of the devices, and the components thereof, can depend on a variety of factors, including but not limited to an anatomy and tendencies of the subject (i.e., patient) in which the devices will be used, the size and shape of components with which the devices will be used, the methods and procedures in which the devices will be used, and the preferences of the surgeon operating the devices and/or otherwise performing the related procedure(s).

In the present disclosure, like-named components of the embodiments generally have similar features and/or purposes, unless stated otherwise. Additionally, a number of terms may be used throughout the disclosure interchangeably but will be understood by a person skilled in the art. Additionally, to the extent that linear or circular dimensions are used in the description of the disclosed devices and methods, such dimensions are not intended to limit the types of shapes that can be used in conjunction with such devices and methods. A person skilled in the art will recognize that an equivalent to such linear and circular dimensions can be easily determined for any geometric shape (e.g., references to widths and diameters being easily adaptable for circular and linear dimensions, respectively, by a person skilled in the art). Additionally, to the extent that terms are used in the disclosure to describe a direction, orientation, and/or relative position of the disclosed prosthetic devices and components thereof and/or for performing a disclosed method of assembly and/or implantation of such devices, such terms are not intended to be limiting. For example, a person skilled in the art will recognize that terms of direction, orientation, and/or relative position (e.g., proximal, distal, medial, lateral, etc.) can be used interchangeably depending, at least in part, on the perspective view of the surgeon or other operator.

The present disclosure is generally related to shoulder joint implants, and represents improvements over existing designs of such implants. These implants are often used in reverse shoulder procedures. Typically the shoulder joint implant includes a baseplate, sometimes referred to herein as a metaglene component (or metaglene). The baseplate is configured to secure a glenosphere component (or glenosphere) to the bony anatomy of the glenoid to complete the repair. As discussed in greater detail below, other components that can engage with the metaglene component and/or the glenosphere component can include a collet and/or a bone screw, and in some such instances the collet and bone screw can form a singular component of the implant. The provided for embodiments can allow for backwards compatibility amongst the components of the implant, and also

allow for surgeons to select a variety of different configuration types for the implant based, at least in part, on the needs and anatomy of the patient and the preferences of the particular surgeon. For example, some configurations that include a collet can allow a bone screw to be omitted from the implant, while some other configurations that include a collet and bone screw coupled together in a single, unitary component can reduce the number of steps performed during a procedure, thereby simplifying the procedure.

Although the various embodiments disclosed herein disclose fixing a glenosphere component to the metaglene component, one of skill in the art will recognize the other prosthetic components can be coupled to the metaglene component, such as but not limited to a glenoid component configured to replace or augment the glenoid surface of the scapula. A person skilled in the art will also understand how the disclosures provided for herein can be adapted for use with devices and procedures associated with other joints without departing from the spirit of the present disclosure.

FIGS. **2**A, **2**B, and **3** provide for one exemplary embodiment of a shoulder joint implant **200**. As shown, the shoulder joint implant **200** can include a metaglene (or metaglene component) **210**, a collet **230**, a glenosphere (or glenosphere component) **250**, and a central bone screw **270**, which, as explained below, can be optional. More particularly, the collet **230** and the bone screw **270** can be disposed in a central throughbore of the metaglene **210** such that the bone screw can be driven into the glenoid and the collet can secure the glenosphere **250** to the metaglene **210**. Each of these components is described in greater detail below.

The metaglene **210** is one component of the shoulder joint implant **200**, and is illustrated in more detail in FIGS. **4**A-**4**C. In the illustrated embodiment, the metaglene **210** includes a platform **312** having a post **314** extending outwardly from a bottom or distal-facing surface **312***d*. The platform **312** can be generally configured such that its bottom or distal-facing surface **312***d* engages in a complementary manner with a surface of the glenoid when implanted and a top or proximal-facing surface **312***p* engages in a complementary manner with the glenosphere **250** or other prosthetic component when coupled together. More specifically, the distal-facing surface **312***d* of the platform **312** can have a convex shape configured to conform to a concave surface of the glenoid. Further, the proximal-facing surface **312***p* of the platform **312** can have a concave shape configured to be complementary with a surface it engages with of the glenosphere **250**.

The platform **312** can include a central throughbore **310** extending through a thickness of the platform **312**. Its configuration is described in greater detail below with respect to its relationship with the post **314** and the collet **230**. Although illustrated in a central configuration, a person skilled in the art will recognize the throughbore **310** can be located in a non-central manner without departing from the spirit of the present disclosure. The platform **312** can also include one or more screw holes or apertures **318** that likewise extend through a thickness of the platform **312**. The apertures **318** can be positioned in any variety of configurations, and in the illustrated embodiment there are four that are positioned radially outward from the central throughbore **310** the such that they are approximately equidistant from each other. The apertures **318** can be used to receive peripheral bone screws (not shown, but operate in a similar manner as screws **80** of FIGS. **1**A and **1**B) to be driven into the bony anatomy of the glenoid to help fix the metaglene **210** in place. Any number and configuration of apertures **318** can be used without departing from the spirit of the disclosure, including using no apertures.

The post **314** can generally extend distally from the distal-facing surface **312***d* of the platform **312**, and can be configured to be press fit into a void or hole drilled into the glenoid of the patient's scapula, thereby providing a first form of bone fixation. In some embodiments, to further augment bone fixation, the post **314** can have a throughbore **320** extending therethrough. In the illustrated embodiment the throughbore **320** is centrally disposed such that it is formed and centered around a central axis A-A of the metaglene **210**, although other locations with respect to the metaglene **210** are possible. This location also places the throughbore **320** in-line with the throughbore **310** of the platform **312**. The throughbore **320** can have an inner diameter sized to accommodate a maximum diameter of a bone screw **270** (e.g., the diameter of a screw head **372**). For example, as shown in the illustrated embodiment, the bone screw **270** can be inserted laterally or proximally through the throughbore **320** of the metaglene **210** such that the screw head **372** is seated on a threaded distal portion **316** of the post **314**. The threaded distal portion **374** of the screw **270** exits the metaglene **210** through a distal opening **308** of the post **314**. As described in more detail below with respect to FIG. **7**, the threaded distal portion **316** of the post **314** can be configured to facilitate the use of smaller screws and thus avoid the need to increase the size of the post **314**. A distal opening **308** of the post **314** can be used to allow a central bone screw (not shown) to exit the metaglene **210** into bone.

As shown in FIGS. **4**B and **4**C, the central throughbore **310** of the metaglene **210** can be configured to facilitate insertion of the collet **230** and optionally a bone screw **270**. For example, in some embodiments, one or more slots or recesses, sometimes referred to herein as keyway(s) **322**, can be defined longitudinally along an inner sidewall **310***s* of the throughbore **310**. The keyways can be configured to slidably mate with keys **512** protruding from the collet **230**, described in greater detail below, to help orient and guide insertion of the collet **230** within the throughbore **310** of the metaglene **210**. The keyways **322** can extend partially along the length of the throughbore **310** and terminate at a distal stop **322***d* at which to seat the collet **230**.

In some embodiments, the mating of the keys **512** and keyways **322** can provide resistance to torsional rotation, e.g., while the glenosphere **250** is screwed into or otherwise coupled to the collet **230**. For example, in some embodiments, the keys **512** of the collet **230** can be configured to engage with the keyways **322** along the inner sidewall **310***s* of the throughbore **310** to form a locking mechanism that provides a torsional resistive force that counteracts a torque imparted by the locking screw of the glenosphere **250** while screwing the locking screw into the collet **230** to form a taper lock (e.g., a Morse taper lock) between the distal facing surface of the glenosphere **250** and the proximal facing surface of the baseplate **210**. Likewise, the mating of the keys **512** and the keyways **322** form a locking mechanism that provides a torsional resistive force that counteracts a torque imparted by the locking screw in an opposite direction while unscrewing the coupling element out of the collet to break the taper lock between the first prosthetic component and the baseplate. As shown in the illustrated embodiment, the keyways **322** can be shaped to form rectangular or other suitably shaped slots. Although two keyways are shown in the illustrated embodiment, more or less than two keyways (e.g., four) can be defined within the throughbore **310** of the metaglene **210**.

Alternatively, or additionally, in some embodiments the central throughbore **310** of the metaglene **210** can be configured to define an annular groove or recess, sometimes referred to herein as a catch **324**, in the inner sidewall **310***s* of the central throughbore **310**. As described in more detail with respect to FIG. **7**, the annular catch **324** can be configured to engage the lip **514** of the collet, thereby securing the collet **230** in place at a predetermined depth.

Alternatively, or additionally, in some embodiments a threaded distal portion **316** can be defined along the inner sidewall **310***s* of the central throughbore **310** at the distal end of the post **314**. In some embodiments, the threaded distal portion **316** of the central throughbore **310** can include two or more threads **316***t* configured to coarsely match the threads of a central bone screw (e.g., **270**). As shown in FIG. **4**C, the threads **316***t* of the distal threaded portion **316** can be configured at an oblique angle or otherwise radially contoured to serve as a spherical or conical bearing surface for the head of the central bone screw. As described in more detail with respect to FIG. **6**A-**6**C, the distal threaded portion **316** of the throughbore **310** can allow the use of a central bone screw having a maximum thread size without having a large screw head, and thereby avoiding the need to increase the size of the post.

The platform **312** and post **314** can come in a variety of configurations, shapes, and sizes. As shown, the base plate **312** can be substantially cylindrical with a substantially circular cross-section. As discussed above, a top surface **312***p* of the platform **312** can have a concave configuration, and a bottom surface **312***d* of the platform can have a convex configuration. The post **314** can also be substantially cylindrical with a substantially circular cross-section, with a diameter of the post **314** being less than a diameter of the platform **312**. In the illustrated configuration, the diameter of the post **314** is approximately half the size of the diameter of the platform **312**, although other proportions are certainly possible, such as the diameter of the post **314** being approximately one-quarters or three-quarters the size of the diameter of the platform **312**.

While the sizes of the components can certainly vary, in some exemplary embodiments a diameter of the platform **312** can be approximately in the range of about 15 millimeters to about 30 millimeters, a thickness of the platform **312** (as viewed, proximal-to-distal) can be approximately in the range of about 3.5 millimeters to about 14 millimeters, and a radius of curvature of the concavity of either or both the proximal-facing and distal-facing surfaces **312***p*, **312***d* of the platform **312** being approximately in the range of about 0.5 millimeters to about 2.0 millimeters. A person skilled in the art will recognize that a thickness of the platform **312** may change over its surface area of the radius of curvature of the concavity of the platform for its proximal-facing surface **312***p* is not the same as the radius of curvature of the concavity of the platform for its distal-facing surface **312***d*. A diameter of the post **314** can be approximately in the range of about 5 millimeters to about 20 millimeters, and a thickness of the post **314** (as viewed, proximal-to-distal) can be approximately in the range of about 5 millimeters to about 30 millimeters. In some exemplary embodiments, a diameter of the platform **312** is approximately 22 millimeters or approximately 27 millimeters, a thickness of the platform **312** is approximately 7 millimeters, approximately 8 millimeters, or approximately10 millimeters, a radius of curvature of the concavity of each of the proximal-facing surface **312***p* and the distal-facing surface **312***d* of the platform **312** is approximately 1.0 millimeters, a diameter of the post **314** is approximately 10 millimeters, and a thickness of the post can be approximately 13 millimeters, approximately 23 millimeters, or approximately 28 millimeters.

The glenosphere **250** is illustrated in FIGS. **2**A, **2**B, and **3**. In some embodiments, the glenosphere **250** can include a hemispherical body **352** having a locking screw **354** or other coupling element that extends outward from a distal surface **356** of the hemispherical body **352**. The distal surface **356** can be complementary in size and shape to the proximal-facing surface **312***p* of the metaglene **210** so that they can form a secure fit when coupled together. In the illustrated embodiment, the fit is a thread fit, but in other embodiments it could be a snap fit or any other coupling technique known to those skilled in the art for coupling two mechanical components. While many different sizes, shapes, and configurations of the glenosphere **250** are possible, in some exemplary embodiments a diameter of the hemispherical body **352** is approximately in the range of about 20 millimeters to about 80 millimeters, such as 40 millimeters, and a height of the hemispherical body **352** (as viewed, proximal-to-distal) can be approximately in the range of about 10 millimeters to about 40 millimeters, such as 20 millimeters. Likewise, in some exemplary embodiments, a diameter of the locking screw **354** can be approximately in the range of about 2.5 millimeters to about 10 millimeters, such as 5 millimeters, and a height of the locking screw **354** (as viewed, proximal-to-distal) can be approximately in the range of about 12.5 millimeters to about 50 millimeters, such as 25 millimeters.

In previous iterations of shoulder joint implants, a glenosphere locking screw was screwed directly into a central throughbore of a metaglene to secure the glenosphere to the metaglene. However, when the diameter of the central throughbore of the metaglene is widened to accommodate the diameter of the head of a bone screw, the diameter of the central throughbore can exceed the diameter or width of a glenosphere locking screw such that the locking screw cannot be screwed directly to the metaglene.

To address this problem, the present disclosure provides for the collet **230**, which is illustrated in FIG. **5** and sometimes referred to as an adaptor or a reducing bushing. As shown in the illustrated embodiment, the collet **230** can include a substantially hollow cylindrical body **502**. The collet can also include open-ended slots **504** spaced about the circumference of the cylindrical body **502** to form radially compressible arms **506** that extend proximally from an annular base portion **508**. As described in more detail below with respect to FIG. **7**, the radially compressible arms of the collet **230** can be configured to facilitate insertion and/or removal of the collet by flexing in response to changes in the diameter of the throughbore **310** of the metaglene **210**. In some embodiments, each of the proximally-extending arms **506** can have an inner threaded portion **510** configured to at least partially surround and threadably engage the locking screw **354** of the glenosphere **250** or other prosthetic component.

In some embodiments, the collet **230** can include one or more lateral protrusions that are configured to orient and guide the collet into the throughbore of the metaglene, sometimes referred to herein as key(s) **512**. For example, as shown in the illustrated embodiment, the keys **512** can have a rectangular or other suitable shaped profile and protrude radially outward from one or more of the arms **506** and the annular base portion **508** of the collet **230**. As described in more detail below with respect to FIG. **7**, the keys **512** can be configured to slide along the keyways **322** formed along an inner sidewall of the throughbore **310** of the metaglene

210. When mated to the inner sidewall of the throughbore, the keys **512** can provide resistance to torsional rotation, e.g., while the glenosphere **250** is screwed into or otherwise coupled to the collet **230**.

In some embodiments, the collet **230** can include an annular protrusion, sometimes referred to herein as a ridge or lip **514**. As described in more detail below with respect to FIG. **7**, the lip can be disposed or segmented across one or more of the arms **506** and configured to engage a catch **324** (e.g., an annular groove or recess) defined within the throughbore of the metaglene, thereby securing the collet **230** in place at a predetermined depth.

In some embodiments, the collet **230** can include a tapered or conical proximal bearing surface **516** at the proximal end of each arm **506**. As described in more detail below with respect to FIGS. **12**A-**12**C, the conical or tapered bearing surface **516** can be used to facilitate removal of the collet from within the central throughbore of the metaglene.

The collet **230** can be disposed within the central throughbore **310** to effectively reduce the inner diameter of the throughbore and threadably engage or otherwise capture the locking screw **354** of the glenosphere **250**. In some embodiments, the collet **230** can have an inner threaded portion **332** that enables the glenosphere locking screw **354** to be screwed directly into the collet and thereby draw the glenosphere **250** onto the proximal-facing bearing surface **312***p* of the metaglene **210**.

The collet **230** can be laterally or proximally inserted into the throughbore **310** of metaglene **210** until the collet **230** reaches a predetermined depth within the throughbore **310**. In other words, the collet **230** is advanced distally towards and into the throughbore **310**. As previously described, in some embodiments, the keyways **322** and/or the catch **324** defined in the sidewall **310***s* of the central throughbore **310** can be used to engage the keys **514** and/or the lip **514** of the collet **230** and thereby position the collet at a predetermined depth. Alternatively, or additionally, the collet **230** can be inserted into the throughbore of the metaglene component after the central bone screw **270** is laterally or proximally inserted into the throughbore, such the collet **230** can be disposed proximal to a head of the central bone screw **270**. In some embodiments the collet **230** can be inserted into the throughbore of the metaglene component with no central bone screw **270** disposed therein.

Like the other components, the collet **230** can have a variety of sizes, shapes, and configurations. In some exemplary embodiments, the collet has a diameter approximately in the range of about 3 millimeters to about 15 millimeters, such as about 6.4 millimeters, and a height (as viewed, proximal-to-distal) approximately in the range of about 5 millimeters to about 20 millimeters, such as about 10 millimeters. Although shown as a cylindrical shape, other shapes are possible provided that the shape is complementary to the shape of the throughbore **310** of the metaglene **210** into which it is inserted.

FIGS. **6**A, **6**B, and **6**C illustrate a central bone screw **270** that is configured for use with the shoulder joint implant of FIG. **2**A. As shown in the illustrated embodiment, the central screw **270** can have a screw head **602**, a shoulder portion **604**, an unthreaded neck portion **606**, a distal threaded portion **608** and a distal tip **610**. In some embodiments, the shoulder portion **604** can be shaped to form a spherical or conical bearing surface **604***d* for the screw head **602**. Notably, the central bone screw **270** is an optional component that can be omitted while still allowing the rest of the shoulder joint implant **200** to be successfully used for a repair procedure.

Typical screw heads are generally much larger in diameter than the thread diameter in order to provide a sufficient bearing surface. However, in some embodiments, in view of the present disclosures, the screw head **602** can have an outer diameter that is the same or approximately the same as the maximum outer diameter of the distal threaded portion **608**. In such embodiments, the spherical or conical shoulder portion **604** can serve as the bearing surface for the screw head. For example, the shoulder portion **605** of the screw can provide a spherical or conical bearing surface **604***d* that extends inward at an oblique angle between the head portion **602** and the neck portion **606**.

Thus, as shown in the illustrated embodiment of FIG. **6**C, when the screw **270** is inserted through the central throughbore **310** and seated at the distal opening **308** of the metaglene post **314**, the spherical or conical bearing surface **604***d* of the screw can bear against the distal threaded portion **316** of the throughbore **310**. For example, as shown, the threads **316***t* of the distal threaded portion **316** can be angled or otherwise radially contoured to match or approximately match the spherical or conical bearing surface **604***d* of the screw **270**. Thus, the distal threaded portion **316** can serve as a proximal-facing bearing surface that substantially conforms to shaped profile of the shoulder portion **604** to support the screw head **602** within the post **314**. As shown in the illustrated embodiment, the spherical or conical shoulder portion **604** can be unthreaded to prevent it from passing through the distal threaded portion **316** of the baseplate, such that the shoulder portion can serve as the bearing surface of the screw **604** to the baseplate **210**. Accordingly, in some embodiments the distal threaded portion **316** of the central throughbore **310** can allow the use of a central bone screw in which the screw head and threaded portion are very close in size (e.g., diameter) and still provide a bearing surface to provide optimal compression. Additionally, the use of central bone screws having reduced diameter heads can provide an advantage in that increases in the size (e.g., outer diameter) of the metaglene post can be avoided and thus requiring removal of less bone in the glenoid.

In some embodiments, the unthreaded neck portion **606** of the bone screw **270** can be cylindrical or substantially cylindrical in shape. The unthreaded neck portion **606** can be configured to provide a clearance between the spherical or conical shoulder portion **604** to the threaded portion **608**. The amount of such clearance provided by the neck portion **606** can be configured so that the distal threaded portion **608** of the screw **270** does not mate directly to the metaglene **210** when the screw head **602** is seated within the post **314**.

In some embodiments, the unthreaded neck portion **606** of the screw **606** can allow a "free spinning screw" design in which the screw is disposed within the baseplate, as shown in FIG. **3**. The unthreaded neck portion **606** can help prevent the distal threaded portion **608** from binding up within the post **314** of the baseplate **210**. Accordingly, the unthreaded neck portion **606** allows the screw **600** to turn within the bone and thereby drag the baseplate **210** further into the bone to provide additional compression between the bone and the distal facing surface **312***d* of the platform **312**. This feature allows the screw to act like any other socket head cap screw that is assembled into a counter-bored hole to provide compression.

In some embodiments, the unthreaded neck portion **606** can provide an additional bearing surface or contact surface area between the screw **600** and baseplate **210**. Additionally, the unthreaded neck portion **606** can be spherical which allows the screw **600** to pivot off axis from the baseplate **210** and thus not influence the baseplate **210** to glenoid bone

interface. In some embodiments, the unthreaded neck portion **606** can be omitted such that the screw **606** could still function as intended with less contact area.

In some embodiments, the diameter and length of the screw **270** can be varied to accommodate user needs. For example, in some embodiments, the length of the screw **270** can be approximately in the range of about 15 millimeters to about 80 millimeters, and in some embodiments it is approximately 40 millimeters. However, in some embodiments, the surgeon can be provided with a number of central bone screws having different screw lengths from which to choose depending, at least in part, on the depth of the glenoid vault in which the screw is to be secured. In some embodiments, the maximum outer diameter of the distal threaded portion **608** of the screw **270** can be approximately in the range of about 6.0 millimeters to about 6.5 millimeters. In some embodiments, the distal threaded portion **640** of the screw **270** can be configured for optimized purchase or grip within the glenoid vault and allow for single or multiple leads to aid in insertion speed. In some embodiments, the distal tip **610** of the screw **270** can include an optimized bone cutting self-tapping feature **612**. The self-tapping feature **612** as shown is a channel formed in an outer surface of the distal threaded portion **640**, which makes it easier to insert the screw **270** into bone.

In view of the present design, and the fact that in at least some instances a bone screw may not be needed, the surgeon can choose to not use the bone screw **270** in the assembly of the shoulder joint implant **200**. If the central bone screw **270** is not used, the collet **230** can be inserted in the metaglene **210** without the bone screw. In some embodiments, the shoulder joint implant **200** can be fixedly attached to the bony anatomy of the glenoid as part of a reverse shoulder reconstruction procedure, described in more detail with respect to FIG. **9**.

FIG. **7** illustrates the collet **230** and bone screw **270** disposed within the central throughbore **310** of the metaglene **210**. In the illustrated embodiment, the collet **230** and the bone screw **270** are separate components. Thus, the surgeon can choose whether or not to include the central bone screw **270** in the assembly of the shoulder joint implant **200**. For example, in some embodiments, if the surgeon chooses to include the central bone screw in the assembly, the screw **270** can be laterally or proximally inserted through the central throughbore **310** (i.e., advanced distally towards and into the metaglene **210**). Thereafter, the collet **230** can be laterally or proximally inserted into the central throughbore **310** such the collet **230** is disposed proximal to the head **602** of the screw **270**. Alternatively, if the surgeon chooses not to include the central bone screw **270**, the collet **230** can be laterally or proximally inserted into the central throughbore **310** without no bone screw.

A detailed description of the structure and procedure for laterally or proximally inserting and seating a central bone screw **270** within the central throughbore **310** is described above with respect to FIGS. **6**A-**6**C and thus is omitted here for the sake of brevity.

In some embodiments, the collet **230** can be laterally or proximally inserted into the central throughbore **310** of the metaglene **210** by aligning the keys **512** of collet **230** with the keyways **322** of the throughbore **310**. For example, as previously discussed with respect to FIGS. **4**A-**4**C and **5**, the collet **230** can include one or more lateral protrusions or keys **512** that are configured to slidably mate with corresponding slots or keyways **322** defined in the throughbore **310**. Once the collet **230** is oriented by aligning the keys **512** with the keyways **322**, the collet **230** can be pushed laterally or proximally into the central throughbore **310** such that it is guided by the keys **512** sliding laterally or proximally along the respectively keyways **322**.

In some embodiments, as the collet **230** enters the throughbore **310**, the inner sidewall **310***s* of throughbore **310** bears against the ridge or lip **514** of collet **230** and thereby causes the radially compressible arms **506** of the collet to flex inward while remaining in contact with the wall. As previously discussed with respect to FIGS. **4**A-**4**C and **5**, the lip **514** of the collet **230** can be an annular protrusion disposed across one or more of the arms **506** and configured to engage an annular groove or catch **324** defined horizontally along the inner sidewall **310***s* of the throughbore **310**.

In some embodiments, when the lip **514** of the collet **230** reaches the location of the catch **324**, the radial compression force applied by the inner sidewall **310***s* can release and cause the collet arms **506** to flex outward such that the lip snaps into or otherwise mates within the catch. In some embodiments, the engagement of the lip **514** of the collet **230** and the catch **324** can create an audible and/or tactile cue (e.g., a "click") to notify the surgeon that the collet has reached the desired depth. In some embodiments, the engagement of the lip **514** of the collet **230** with the catch **324** can coincide with the keys **512** at the annular base portion **508** of the collet **230** hitting a mechanical stop **322***d* at the bottom of the keyways **322**. With the collet **230** secured at the predetermined depth, a glenosphere (e.g., the glenosphere **250**) or other prosthetic component can be attached to the metaglene **210** using techniques described herein or otherwise known to those skilled in the art.

In some embodiments, the location of the mechanical stop **322***d* at the distal end of the keyways **322** can define a distal most depth, or the key depth, at which the distal end of the collet **230** is capable of bottoming out within the throughbore **310** of the baseplate **210**. The distance D between the distal most depth of the keyways **322** and the annular recessed portion defined in the inner sidewall **310***s* of the throughbore **310**, or catch **324**, can be a predefined distance that is slightly greater than the height of the collet **230**. For example, in some embodiments, the distance D between the distal most depth of the keyways and the catch **324** can be greater than the height of the collet by an amount in the range between approximately 0.5 millimeters and approximately 2.0 millimeters, such as about 1.0 millimeters. In some embodiments, where the height of the collet **230** is in the range between approximately 5 millimeters and 20 millimeters, the distance D can be in the range between approximately 4.0 millimeters and 22 millimeters. For example, in some embodiments, where the height of the collet **230** is approximately 10 millimeters, the distance D can be in the range between 9 and 12 millimeters, such as about 11 millimeters. Thus, the additional tolerance provided by the predefined distance D between the catch **324** and the distal end **322***d* of the keyways **322** can allow the collet **230** to be properly secured between the catch **324** and the distal end **322***d* of the keyways **322**.

The additional tolerance provided by the predefined distance D can be useful during removal of the glenosphere (e.g., **250**). For example, in some embodiments, the glenosphere and thus the glenosphere locking screw (e.g., **354**) can be unscrewed (e.g., rotated counterclockwise) to remove the glenosphere from the baseplate **210**. As the locking screw is unscrewed, the ridge or lip **514** of the collet **230** releases from the catch **324** in the sidewall **310***s* of the throughbore **310**, thereby causing the collet to be pushed towards the mechanical stop **322***d* of the keyways **322** until the distal end of the collet **230** bottoms out against the stop.

Once the collet **230** bottoms out against the mechanical stop **322***d*, the continuing turning of the locking screw **354** to unscrew the glenosphere (e.g. **250**) causes the load to be transferred through glenosphere such that the taper lock connection between the glenosphere and the baseplate **210** is pulled apart. In some embodiments, the taper lock connection can be a Morse taper lock between the distal facing surface of the glenosphere and the proximal facing surface of the baseplate **210**. This is essentially a "Jacking Screw" function for removal of the glenosphere from the baseplate.

FIG. **8** illustrates the shoulder joint implant **200** with the glenosphere **250** secured to the collet **230**. As shown in the illustrated embodiment, the collet **230** can be disposed within the central throughbore **310** to effectively reduce the inner diameter of the throughbore **310** and threadably engage or otherwise capture the locking screw **354** of the glenosphere **250**. For example, as shown, each of the proximally-extending collet arms **506** can have an inner threaded portion **510** configured to at least partially surround the locking screw **354** such that a threaded portion **358** of the locking screw **354** can be screwed into the collet **230** and thereby draw and secure the hemispherical body **352** of the glenosphere **250** onto the proximal-facing surface **312** of the metaglene **210**. When the collet **230** is secured to the inner sidewall **310***s* of the throughbore **310**, the engagement of the keys **512** and the keyways **322** can provide resistance to torsional rotation, e.g., while the glenosphere **250** is screwed into or otherwise coupled to the collet **230**. Alternatively or in addition, engagement of the lip **514** of the collet **230** and the catch **324** can prevent or otherwise limit vertical displacement of the collet **230** within the throughbore **310**.

In exemplary embodiments any and all of the metaglene **210**, the collet **230**, the glenosphere **250**, and the screw **270** can be made from any number of implantable metallic materials or other biocompatible materials to form the implant. Some non-limiting examples of materials suitable for forming the various components implant can include titanium, cobalt-chrome, stainless steel, and other metals known to those skilled in the art, and some plastic materials, such as but not limited to, polyetheretherketone (PEEK) and Ultra High Molecular Weight Polyethylene (UHMWPE). In some instances, the various components (e.g., the metaglene **210**, the collet **230**, the glenosphere **250**, and the screw **270**) can be made from the same material, while in other embodiments one or more components can be made from different materials. For example, in some instances in may be beneficial to have the metaglene **210**, the collet **230**, and the glenosphere **250** formed from surgical grade titanium, while the screw **270** is formed from surgical grade titanium coated with a porous biocompatible material (e.g., a hydroxyapatite (HA) coating). Additionally, a person skilled in the art will recognize that a number of different material blends can be used to form any component of the implants provided for herein or otherwise derivable from the present disclosures.

FIG. **9** illustrates an exemplary embodiment of a method **900** of implanting the shoulder joint implant **200** in a patient's scapula. In the illustrated embodiment, the shoulder joint implant **200** can be implanted as part of a reverse shoulder reconstruction surgery in which the glenosphere (i.e., the "ball" in the ball-and-socket joint) is secured to the patient's scapula. A humeral cup (i.e., the "socket" in the ball-and-socket joint) can be secured to the patient's humerus to provide a corresponding concave bearing for the glenosphere. Such a reverse configuration allows the patient's deltoid muscle, which is one of the larger and stronger shoulder muscles, to raise the arm. Although the illustrated configuration uses the implant **200** described above, at least some of the components associated with or otherwise used in conjunction with the implant **200** may not be easily visible in the various blocks **910**, **920**, **930**, **940**, **950**, **960**, and **970**. In view of the disclosures provided for herein, and their related illustrations, a person skilled in the art will understand how the various components of the implant **200** engage the various portions of the patient's anatomy, and/or the components of the implant **200** and related tools used in conjunction with the procedures disclosed with respect to FIG. **9**.

At block **910**, a glenoid **912** of the patient's scapula **914** can be reamed such that a bony surface of the glenoid **912** conforms to the distal bearing surface (e.g., **312***d*) of the metaglene (e.g., **210**). In some embodiments, a glenoid resurfacing reamer **710** can be used to prepare the glenoid **912** to have an approximately smooth, curved surface having the same or substantially the same radius of curvature as the distal-facing surface **312***d* of the metaglene **210**. The diameters may also be complementary, whether that means the same or substantially equal, or the glenoid **912** being a little larger with the labrum (not visible in block **910**) being adjacent to help keep the metaglene **210** in the desired location.

At block **920**, a hole can be drilled into the glenoid **912** to receive the metaglene post (e.g., **314**) of the metaglene (e.g., **210**). In some embodiments, a cannulated stop drill **720** aligned with a central guide pin (not shown) can be used to drill the central hole.

At block **930**, the metaglene post **314** (not visible) can be disposed into the glenoid **912** through the drilled hole. In some embodiments, a metaglene delivery instrument **730** can be secured to the metaglene **210** and used to insert the metaglene post **314** into the hole drilled into the glenoid **912**. The metaglene post **314** can be slightly oversized relative to the diameter of the drilled hole to enable a press fit. Once the post **314** and the distal-facing surface **312***d* (not visible) of the metaglene **210** is seated on the bone **912**, the metaglene delivery instrument **730** can be removed.

At block **940**, one or more peripheral bone screws (not shown) can be driven into the glenoid through one or more screw apertures **318** of the metaglene **210** to secure the metaglene **210** to bone. In some embodiments, a screw driver **740** can be used to screw the peripheral bone screws at superior and/or inferior locations in the glenoid **912**. In some embodiments, peripheral bone screws can be placed at lateral and/or medial locations of the glenoid.

At optional block **950**, a bone screw **270** (not visible) can be laterally or proximally inserted through the central throughbore **310** (not visible) of the metaglene **210** prior to inserting the collet **230**. In some embodiments, a screw driver **750** can be used to screw a distal threaded portion **608** (not visible) of the bone screw **270** into the glenoid through an opening **308** (not visible) at the distal end of the post **314** (not visible) of the metaglene **210**. In some embodiments, the bone screw can be laterally or proximally inserted as previously described with respect to FIGS. **6**A-**6**C.

At block **960**, the collet **230** (not visible) can be laterally or proximally inserted into the central throughbore **310** (not visible) defined in the metaglene **210** into the post **314** (not visible). In some embodiments, a collet delivery instrument **760** can be coupled to the collet **230** (not visible) and used to push the collet **230** into the central throughbore **310** (not visible) as previously described with respect to FIG. **7**.

At block **970**, the glenosphere **250** of the shoulder joint implant **200** can be secured onto the proximal bearing surface **312***p* of the metaglene **210**. For example, in some embodiments, a locking screw **354** (not visible) or other

coupling element protruding from a distal bearing surface of the glenosphere **250** can be secured to the collet **230** (not visible) within the throughbore of the metaglene **210**. In some embodiments, the glenosphere **250** can be screwed into or otherwise coupled the collet **230** as previously described with respect to FIG. **8**.

FIGS. **10**A and **10**B provide for another exemplary embodiment of a shoulder joint implant **1000**. As shown, the shoulder joint implant **1000** can include a metaglene **1010**, a glenosphere **1030**, and an integrated collet and central bone screw **1050**. Accordingly, the integrated collet and central bone screw **1050** can allow surgeons to add a bone screw down the center axis of the metaglene component as a single unitary component in one step, while maintaining backwards compatibility with existing glenosphere components.

Except as described below or as will be readily appreciated by one having ordinary skill in the art, the metaglene **1010** and the glenosphere **1030** are substantially similar to the metaglene **210** and the glenosphere **250** described above with respect to FIGS. **2**A-**9**. A detailed description of the structure and function thereof is omitted here for the sake of brevity. The shoulder joint implant **1000** can include any one or more of the features of the shoulder joint implant **200**.

As shown in the illustrated embodiment, the integrated collet and bone screw **1050** can include a collet portion **1052**, a proximal screw head **1054**, a spherical or conical shoulder portion **1056**, an unthreaded neck portion **1058**, a distal threaded portion **1060**, and a distal tip **1062**. Except as described below or as will be readily appreciated by one having ordinary skill in the art, the shoulder portion **1056**, an unthreaded neck portion **1058**, a distal threaded portion **1060**, and a distal tip **610** are substantially similar to the spherical or conical shoulder portion **604**, the unthreaded neck portion **606**, the distal threaded portion **608**, and the distal tip **610** of the screw **270** described above with respect to FIGS. **6**A-**6**C. A detailed description of the structure and function thereof is omitted here for the sake of brevity.

In some embodiments, the collet portion **1052** can be fixedly coupled to the proximal head **1054** of the screw to form the integrated collet and central bone screw **1050**. For example, the collet portion **1052** can mechanically attached, welded, bonded, or attached in any other manner of ways to the proximal screw head **1054**. Alternatively, the collet portion **1052** can be integrally formed on the proximal screw head **1054**, e.g., using a three dimensional (3D) printing technique.

As shown in the illustrated embodiment of FIG. **10**C, the collet portion **1052** can have a substantially hollow cylindrical body **1070**. The collet portion **1052** can include open-ended slots **1072** spaced about the circumference of the cylindrical body **1070** to form radially compressible arms **1074** that extend proximally from an annular base portion **1076**. The radially compressible arms **1074** of the collet portion **1052** can be configured to facilitate insertion and/or removal of the collet by flexing in response to changes in the diameter of the throughbore of the metaglene **1010**.

In some embodiments, each of the proximally-extending arms **1074** can have an inner threaded portion **1078** configured to at least partially surround and threadably engage a locking screw **1032** of the glenosphere **1030** or other prosthetic component. In some embodiments, the collet portion **1052** can include an annular protrusion, sometimes referred to herein as a lip **1080**. As shown, the lip **1080** can be disposed or segmented across one or more of the arms **1074** and configured to engage an annular groove or recess defined within the throughbore of the metaglene (e.g., catch **324** of FIG. **4**C), thereby securing the collet **230** in place at a predetermined depth. In some embodiments, the collet portion **1052** can include a tapered or conical proximal bearing surface **1082** at the proximal end of each arm **1074**. As described in more detail below with respect to FIGS. **12**A and **12**B, the conical or tapered bearing surface **1082** can be used to facilitate removal of the collet.

In some embodiments, the integrated collet/central bone screw **1050** can be laterally or proximally inserted into the central throughbore of the metaglene **1010** and driven into the bony anatomy of the glenoid in as single unitary component. For example, in some embodiments, the integrated collet and central bone screw **1050** can be advanced into the central throughbore of the metaglene (e.g., **310** of FIG. **4**C) until the distal tip **1062** of the screw **1050** reaches the threaded distal portion (e.g., **316** of FIG. **4**C) of the central throughbore. Once the integrated collet/central bone screw **1050** reaches the threaded distal portion **316**, the integrated collet/central bone screw can be screwed loosely through the threaded distal portion to advance the unitary component into bony anatomy of the glenoid.

In some embodiments, as the collet portion **1052** of the unitary component enters the throughbore, the inner sidewall of the throughbore (e.g., **310***s* of FIG. **4**C) bears against the lip **1080** of collet portion **1052** and thereby causes the radially compressible arms **1074** of the collet to flex inward while remaining in contact with the wall. The lip **1080** of the collet portion **1052** can be an annular protrusion disposed across one or more of the arms **1074** and configured to engage an annular groove or catch (e.g., **324** of FIG. **4**C) defined horizontally along the inner sidewall **310***s* of the throughbore **310**.

In some embodiments, when the lip **1080** of the collet portion **1052** reaches the location of the catch **324**, the radial compression force applied by the inner sidewall **310***s* can release and cause the collet arms **1074** to flex outward such that the lip snaps into or otherwise mates within the catch. In some embodiments, the engagement of the lip **1080** of the collet portion **1052** and the catch **324** can create an audible and/or tactile cue (e.g., a "click") to notify the surgeon that the collet has reached the desired depth. With the collet portion **1052** secured at the predetermined depth, a glenosphere **1030** or other prosthetic component can be screw or otherwise attached to the metaglene **1010**.

FIG. **11** illustrates an exemplary embodiment of a method **1100** of implanting the shoulder joint implant **1100** in a patient's scapula. In the illustrated embodiment, the shoulder joint implant **1000** can be implanted as part of a reverse shoulder reconstruction surgery. The method **1100** may include operations in blocks **910**, **920**, **930**, **940**, and **970** that are described above with reference to FIG. **9**. Accordingly, a detailed description of these operations is omitted here for the sake of brevity.

At block **1110**, the integrated collet and central bone screw **1050** (not visible) can be laterally or proximally inserted into the central throughbore defined in the metaglene **1010** through the post and driven into the glenoid through an opening at the distal end of the post of the metaglene **1010**. In some embodiments, the integrated collet-bone screw **1050** can be coupled to the distal head of a delivery tool **770**. The tool **770** can be operated by the surgeon to push the integrated collet-bone screw **1050** into the central throughbore (e.g., **310**, not visible) and then to rotate integrated collet-bone screw **1050** until the bone screw portion **1060** (not visible) is secured to the glenoid **912** as previously described with respect to FIGS. **10**A-**10**C.

FIGS. **12**A, **12**B, and **12**C provide for an exemplary embodiment of a collet removal tool **1200**. As shown the collet removal tool **1200** can include a handle portion **1210** and a distal head **1220**. For example, in some embodiments, the collet removal tool **1200** can be inserted laterally or proximally into the central throughbore **310** of the metaglene **210**. An operator can rotate or otherwise actuate the handle portion **1210** such that the distal head **1220** engages the inner threaded portion **510** of the proximally extending arms **506** of the collet **230**.

In some embodiments, the distal head **1220** can include a first engagement mechanism **1232** having a threaded external surface configured to engage the thread portion **510** of the collet **230** as the head is rotated. In some embodiments, the first engagement mechanism **1232** can be a threaded cylindrical body disposed at a distal most end of the head **1220**.

As previously discussed with respect to FIG. **4**C, a lip **514** of the collet **230** can be secured within a catch **324** or other recessed sidewall portion defined in the throughbore **310**. To disengage the lip **514** from the catch **324**, the distal head **1220** can include a second engagement mechanism **1234** proximal to the first engagement mechanism **1232**. As the head of the tool **1220** is rotated and advanced laterally or proximally, the second engagement mechanism **1234** can be configured to radially compress the arms **506** of the collet **230** radially inward away from the catch **324** in the throughbore.

For example, in some embodiments, the second engagement mechanism **1234** can have a distal-facing bearing service that conforms to the shape or profile at the proximal end of the collet **230**. As previously described with respect to FIG. **5**, the collet **230** can have a conical or tapered bearing surface **516** at the proximal end of each arm **506** to facilitate removal. Thus, in some embodiments, the second engagement mechanism **1234** can be configured to have a distal-facing bearing surface of the distal head **1220** that complements the collet's conical or tapered bearing surface **516**.

As shown in the illustrated embodiment of FIG. **12**C, as the operator continues to rotate the handle portion **1210**, the head of the tool **1220** can advance laterally or proximally until the distal facing feature surface of the second engagement mechanism **1234** engages the conical or tapered bearing surface **516** of the collet. As the head **1220** further advances, the second engagement mechanism **1234** can radially compress the arms of the collet away from the catch **324** or other recessed sidewall portion and thereby release the lip **514** of collet **230** from the catch. Once the lip **514** of the collet **230** is released from the catch **324**, the distal head **1220** can be pulled proximally out of the central throughbore **310** along with the collet which is threadably attached to the first engagement mechanism **1232**.

Although the collet removal tool **1200** is described above for removing a collet **230** which is separate from the bone screw **270**, one of ordinary skill in the art will recognize that the collet remove tool **1200** can be used to remove an integrated collet/bone screw **1050** from with the central throughbore of a metaglene in a substantially similar manner.

FIGS. **13**A and **13**B are schematic illustrations of an exemplary embodiment of a shoulder joint implant **1300** having a central bone screw integrated into the metaglene. In the illustrated embodiment, the shoulder joint implant **1300** can include a metaglene **1310** and a glenosphere **1350**. The metaglene **1310**, sometimes referred to herein as a monoblock construct, can include platform **1312** having a proximal-facing surface **1314** and a distal-facing surface **1316**. Peripheral bone screws (not shown) can be positioned in some or all of the peripheral screw holes **1318** defined in the platform **1312** and driven into the glenoid to fix the metaglene **1310** in place. In some embodiments, a bone screw portion **1320** can extend outwardly from the distal-facing surface **1316** of the platform **1312** along a central longitudinal axis of the metaglene **1310**. As described in more detail with respect to FIG. **15**, the bone screw portion **1320** can be screwed into the bony anatomy of the glenoid at the same time that the metaglene **1310** is seated onto the glenoid, and thereby reducing the number of steps needed to install the shoulder joint implant.

In some embodiments, the glenosphere **1350** can include a hemispherical body **1352** having a locking screw **1354** or other coupling element that extends outward from the distal surface **1356** of the hemispherical body **1352**. Although the illustrated embodiment disclose fixing a glenosphere **1350** to the metaglene **1310**, one of ordinary skill in the art will recognize the other prosthetic components can be coupled to the metaglene, such as but not limited to a glenoid component configured to replace or augment the glenoid surface of the scapula.

FIG. **14** is a schematic illustration of a cross section of the metaglene **1310** of FIGS. **13**A and **13**B having an integrated central bone screw portion **1320**. In the illustrated embodiment, the metaglene **1310** includes a central throughbore **1322** configured to extend from the proximal-facing surface **1314** of the platform **1312** and partially into the bone screw portion **1320**. The locking screw **1354** of the glenosphere **1350** can be screwed directly into the central throughbore **1322** to draw the distal-facing surface **1356** of the glenosphere body **1352** onto the proximal-facing surface **1314** of the metaglene platform **1312**. In some embodiments, a proximal end of the central throughbore **1322***p* can be configured to threadably engage central locking screw **1354** of the glenosphere **1350**. As shown in the illustrated embodiment, the outer thread diameter of the bone screw portion **1320** can be greater at a proximal end portion **1320***p* than the outer thread diameter at a distal end portion **1320***d* in order to accommodate to the diameter of the locking screw **1354**.

FIG. **15** illustrates an exemplary embodiment of a method **1500** for implanting the shoulder joint implant **1300** of FIGS. **13**A and **13**B into a patient's scapula. In the illustrated embodiment, the shoulder joint implant **1300** can be implanted as part of a reverse shoulder reconstruction surgery.

At block **1510**, the metaglene **1310** having an integrated central bone screw portion, or monoblock construct, can be attached to a distal end of a monoblock delivery instrument **800**. In some embodiments, the monoblock delivery instrument **800** can have a handle portion **810**, a distal head **820**, and a locking mechanism **830**. The distal head **820** can be specifically adapted to engage one or more of the screw holes **1318** or other locking feature defined on the proximal face **1314** of the platform **1312**.

At block **1520**, the monoblock construct **1310** can be locked to the monoblock delivery instrument **800** using the locking mechanism **830**. In some embodiments, the locking mechanism **830** can include a handle portion **832** and an elongated shaft **834** having a distal threaded head **834**. The locking mechanism **830** can be laterally or proximally inserted through a cannula defined along a central axis of the handle portion **810** and the distal head **820** and received within the central throughbore **1322** (not visible) of the monoblock construct **1310**. The handle portion **832** of the locking mechanism **830** can be rotated in a direction (e.g.,

clockwise) such that the threaded head **836** of the locking mechanism **830** threadably engages the central throughbore and thereby locks the monoblock construct **1310** to the distal head **820** of the monoblock delivery instrument **800**.

At block **1530**, the monoblock construct **1310** can be inserted into a hole drilled into the glenoid **912** of a patient's scapula **914**. For example, as shown in the illustrated embodiment, the monoblock delivery instrument **800** can push the bone screw portion **1320** extending from the monoblock construct **1310** into the hole.

At block **1540**, the monoblock construct **1310** can be seated onto the glenoid **912**, such that the bone screw portion **1320** (not visible) is screwed into the glenoid vault (not visible) and the distal-facing surface **1316** (not visible) of the metaglene platform **1312** is seated on the bony surface of the glenoid **912**. As shown in the illustrated embodiment, the monoblock delivery instrument **800** can be rotated in a tightening direction (e.g., clockwise) to screw the bone screw portion **1320** until a distal-facing surface **1316** (not visible) of the monoblock construct **1310** is seated onto the glenoid.

At block **1550**, the peripheral screw holes **1318** of the platform **1312** of the monoblock construct **1310** can be aligned. In some embodiments, the handle portion **810** of the monoblock delivery instrument **800** can be rotated as needed in a clockwise and/or a counter clockwise direction to align the peripheral screw holes **1318** such that peripheral screws (not shown) can be inserted and driven through the screw holes in one or more of a superior, inferior, medial and/or lateral position with respect to the surface of the glenoid bone.

At block **1560**, the handle portion **832** of the locking mechanism **830** can be rotated in a direction to unlock the monoblock construct **1310** from the distal head **820** of the monoblock delivery instrument **800**. For example, as shown in the illustrated embodiment, the handle portion **832** of the locking mechanism **830** can be rotated counter-clockwise to disengage the threaded head **836** (not visible) of the locking mechanism **830** from the central throughbore (e.g., **1322**, not visible) of the monoblock construct **1310** and thereby unlock the monoblock construct **1310** from the distal head **820** of the monoblock delivery instrument **800**.

At block **1570**, the monoblock delivery instrument **800** can be removed from the monoblock construct **1310** by proximally pulling the instrument away from the construct. After the monoblock inserter instrument is removed, peripheral screws can be inserted and driven through the peripheral screw holes **1318** in the platform **1312** of the monoblock construct **1310**. Alternatively or additionally, the glenosphere **1350** (not shown) can be secured to the platform **1312** of the monoblock construct **1310** by screwing the locking screw **1354** (not shown) into the threaded portion of the central throughbore **1322** (not shown).

The preceding description of the disclosed embodiments is provided to enable any person skilled in the art to make or use the claims. Various modifications to these embodiments will be readily apparent to those skilled in the art, and the generic principles defined herein may be applied to other embodiments without departing from the scope of the claims. Thus, the present disclosure is not intended to be limited to the embodiments shown herein but is to be accorded the widest scope consistent with the following claims and the principles and novel features disclosed herein. All publications and references cited herein are expressly incorporated herein by reference in their entirety.

What is claimed is:

1. A shoulder joint implant, comprising:

a first prosthetic component that includes a coupling element protruding from a distal bearing surface thereof;

a baseplate configured to secure the first prosthetic component to bone, the baseplate including a post protruding from a distal bearing surface thereof and defining a throughbore that extends along a proximal-distal axis of the post; and

a removable collet disposed within the throughbore and configured to engage the coupling element of the first prosthetic component such that the first prosthetic component is fixedly coupled to the baseplate,

wherein the collet has a cylindrical body with a proximal free end and a distal free end, and

wherein the collet is disposed within the throughbore of the baseplate such that the entire cylindrical body of the collet is disposed within the throughbore or the proximal free end of the collet is flush with a proximal face of the baseplate in which the throughbore is disposed.

2. The implant of claim **1**, wherein the collet is dimensioned to engage the coupling element, the coupling element having a diameter that is less than a diameter of the throughbore of the baseplate.

3. The implant of claim **1**, further comprising:

a central bone screw comprising a proximal head and a distal threaded portion, and

wherein the throughbore of the baseplate is dimensioned to facilitate insertion of the central bone screw having a diameter that is greater than a diameter of the coupling element of the first prosthetic component.

4. The implant of claim **1**, wherein the implant is devoid of a central bone screw.

5. The implant of claim **1**, wherein a plurality of screw holes are defined in the baseplate adjacent the throughbore and the implant further comprises a plurality of peripheral bone screws disposed through the plurality of screw holes and configured to secure the baseplate implant to bone.

6. The implant of claim **1**, wherein the collet comprises a plurality of proximally-extending arms that are radially compressible to facilitate at least one of insertion and removal of the collet in the throughbore of the baseplate.

7. The implant of claim **6**, wherein the one or more compressible arms of the removable collet have a proximal ramped bearing surface configured to bear against a counterpart bearing surface of a prosthetic implant tool, the one or more compressive arms being radially compressed in response to the counterpart bearing surface of the prosthetic implant tool bearing against the proximal ramped bearing surface, thereby disengaging the lateral protrusion of the one or more compressible arms from the recessed portion of the inner sidewall of the throughbore.

8. The implant of claim **1**, wherein the first prosthetic component is a glenosphere component having an integrated locking screw protruding from a distal bearing surface thereof.

9. A method of implanting a shoulder prosthetic implant in a scapula of a patient, comprising:

reaming a glenoid of a scapula such that a surface of the glenoid is complementary to a distal bearing surface of a baseplate of a prosthetic shoulder implant;

drilling a hole into the glenoid to receive a post that protrudes from the distal bearing surface of the baseplate;

disposing the post of the baseplate into the glenoid through the drilled hole;

securing a plurality of peripheral bone screws into the glenoid through one or more screw holes defined in the baseplate;

laterally inserting a removable collet into a throughbore defined in the baseplate, wherein the throughbore extends along a proximal-distal axis of the baseplate of the post; and

securing a first prosthetic component of the prosthetic shoulder implant onto a proximal bearing surface of the baseplate such that a coupling element protruding from a distal bearing surface of the first prosthetic component is secured to the collet within the throughbore of the baseplate and such that at least a portion of the first prosthetic component is in contact with the baseplate.

10. The method of claim **9**, further comprising:

laterally inserting a central bone screw through the throughbore of the baseplate prior to inserting the removable collet; and

securing a distal threaded portion of the central bone screw into the glenoid through an opening at the distal end of the post of the baseplate.

11. The method of claim **9**, wherein the collet is coupled to a proximal head of a central bone screw and the method further comprises:

laterally inserting the collet and the central bone screw together into the throughbore of the baseplate; and

securing a distal threaded portion of the central bone screw into the glenoid through an opening at the distal end of the post of the baseplate.

12. The method of claim **9**, wherein the throughbore of the baseplate is dimensioned to facilitate insertion of a central bone screw having a diameter that is greater than a diameter of the coupling element of the first prosthetic component.

13. The method of claim **9**, wherein the first prosthetic component is a glenosphere component having an integrated locking screw protruding from a distal bearing surface thereof.

14. The method of claim **9**, wherein the removable collet comprises a plurality of compressible arms, and the method further comprising:

removing the collet from within the throughbore of the baseplate using a tool by laterally inserting the tool into the throughbore of the baseplate, rotating a distal head of the tool to engage the threaded portion of the plurality of arms, continue rotating the distal head until the distal head radially compresses the plurality of arms away from a recessed sidewall portion of the throughbore, and proximally pulling the collet out of the throughbore.

15. A shoulder joint implant, comprising:

a first prosthetic component that includes a coupling element protruding from a distal bearing surface thereof;

a baseplate configured to secure the first prosthetic component to bone, the baseplate including a post protruding from a distal bearing surface thereof and defining a throughbore that extends along a proximal-distal axis of the post; and

a removable collet disposed within the throughbore, the collet comprising a plurality of proximally-extending arms that are radially compressible to facilitate at least one of insertion and removal of the collet in the throughbore of the baseplate, and the collet being configured to engage the coupling element of the first prosthetic component such that the first prosthetic component is fixedly coupled to the baseplate,

wherein one or more of the plurality of arms comprise a lateral protrusion configured to engage an annular recessed portion of an inner sidewall of the throughbore when the arms are not compressed, thereby fixing the removable collet at a predetermined depth in the throughbore of the baseplate.

16. A shoulder joint implant, comprising:

a first prosthetic component that includes a coupling element protruding from a distal bearing surface thereof;

a baseplate configured to secure the first prosthetic component to bone, the baseplate including a post protruding from a distal bearing surface thereof and defining a throughbore that extends along a proximal-distal axis of the post; and

a removable collet disposed within the throughbore, the collet comprising a plurality of proximally-extending arms that are radially compressible to facilitate at least one of insertion and removal of the collet in the throughbore of the baseplate, and the collet being configured to engage the coupling element of the first prosthetic component such that the first prosthetic component is fixedly coupled to the baseplate,

wherein the collet includes one or more keys protruding from one or more of the arms of the collet, the one or more keys being configured to engage with one or more keyways defined longitudinally along an inner sidewall of the throughbore of the baseplate to align and guide the collet into the baseplate.

17. The implant of claim **16**, wherein the one or more keys are configured to engage with the one or more keyways defined along the inner sidewall of the throughbore to resist rotation of the collet while disposed within the throughbore of the baseplate.

18. The implant of claim **16**, wherein the one or more keys of the collet are configured to engage with the one or more keyways along the inner sidewall of the throughbore to form a locking mechanism that provides a torsional resistive force that counteracts a torque imparted by the coupling element of the first prosthetic component while screwing the coupling element of the first prosthetic component into the collet to form a taper lock between the first prosthetic component and the baseplate or while unscrewing the coupling element out of the collet to break the taper lock between the first prosthetic component and the baseplate.

19. The implant of claim **16**, wherein the length of the one or more keyways define a distal most depth at which the removable collet is seated in the throughbore of the baseplate.

20. The implant of claim **19**, wherein an annular recessed portion is defined in the inner sidewall of the throughbore and configured to capture a lateral protrusion from one or more of the plurality of arms of the collet when inserted into the throughbore,

wherein the distance between the annular recessed portion and the distal most depth of the one or more keyways is a predefined distance that is greater than the height of the collet such that the collet bottoms out at the distal end of the one or more keyways when the coupling element of the glenosphere component is unscrewed from the collet.

21. A shoulder joint implant, comprising:

a first prosthetic component that includes a coupling element protruding from a distal bearing surface thereof;

a baseplate configured to secure the first prosthetic component to bone, the baseplate including a post protrud-

ing from a distal bearing surface thereof and defining a throughbore that extends along a proximal-distal axis of the post;

a removable collet disposed within the throughbore and configured to engage the coupling element of the first prosthetic component such that the first prosthetic component is fixedly coupled to the baseplate; and

a central bone screw comprising a proximal head and a distal threaded portion,

wherein the throughbore of the baseplate is dimensioned to facilitate insertion of the central bone screw having a diameter that is greater than a diameter of the coupling element of the first prosthetic component.

22. The implant of claim **21**, wherein the collet is dimensioned to engage the coupling element, the coupling element having a diameter that is less than a diameter of the central bone screw.

23. The implant of claim **21**, wherein the collet and the central bone screw are separate components, the collet being disposed within the throughbore of the baseplate proximal to the proximal head of the bone screw.

24. The implant of claim **23**, wherein the collet is disposed within the throughbore of the baseplate after the central bone screw is laterally inserted into the throughbore.

25. The implant of claim **21**, wherein the collet is coupled to the proximal head of the central bone screw.

26. The implant of claim **21**, wherein the proximal head of the central bone screw includes a shoulder portion that has at least one of a spherical shape and conical shape, and wherein an inner sidewall of the throughbore at the distal end of the post comprises a threaded sidewall portion configured to support the shoulder portion of the central bone screw.

27. The implant of claim **21**, wherein the distal threaded portion of the central bone screw extends through a threaded opening at the distal end of the post and is configured to secure the baseplate to bone.

28. A shoulder joint implant, comprising:

a first prosthetic component that includes a coupling element protruding from a distal bearing surface thereof;

a baseplate configured to secure the first prosthetic component to bone, the baseplate including a post protruding from a distal bearing surface thereof and defining a throughbore that extends along a proximal-distal axis of the post; and

a removable collet disposed within the throughbore and configured to engage the coupling element of the first prosthetic component such that the first prosthetic component is fixedly coupled to the baseplate,

wherein the first prosthetic component is a glenosphere component having an integrated locking screw protruding from a distal bearing surface thereof.

29. The implant of claim **28**, wherein the collet is dimensioned to engage the coupling element, the coupling element having a diameter that is less than a diameter of the throughbore of the baseplate.

30. The implant of claim **28**, wherein a plurality of screw holes are defined in the baseplate adjacent the throughbore and the implant further comprises a plurality of peripheral bone screws disposed through the plurality of screw holes and configured to secure the baseplate implant to bone.

31. The implant of claim **28**, wherein the collet comprises a plurality of proximally-extending arms that are radially compressible to facilitate at least one of insertion and removal of the collet in the throughbore of the baseplate.

32. A method of implanting a shoulder prosthetic implant in a scapula of a patient, comprising:

reaming a glenoid of a scapula such that a surface of the glenoid is complementary to a distal bearing surface of a baseplate of a prosthetic shoulder implant;

drilling a hole into the glenoid to receive a post that protrudes from the distal bearing surface of the baseplate;

disposing the post of the baseplate into the glenoid through the drilled hole;

securing a plurality of peripheral bone screws into the glenoid through one or more screw holes defined in the baseplate;

laterally inserting a removable collet into a throughbore defined in the baseplate, wherein the throughbore extends along a proximal-distal axis of the baseplate of the post; and

securing a first prosthetic component of the prosthetic shoulder implant onto a proximal bearing surface of the baseplate such that a coupling element protruding from a distal bearing surface of the first prosthetic component is secured to the collet within the throughbore of the baseplate,

wherein the throughbore of the baseplate is dimensioned to facilitate insertion of a central bone screw having a diameter that is greater than a diameter of the coupling element of the first prosthetic component.

33. The method of claim **32**, wherein the collet is dimensioned to engage the coupling element of the first prosthetic component having a diameter that is less than a diameter of the central bone screw.

34. A method of implanting a shoulder prosthetic implant in a scapula of a patient, comprising:

reaming a glenoid of a scapula such that a surface of the glenoid is complementary to a distal bearing surface of a baseplate of a prosthetic shoulder implant;

drilling a hole into the glenoid to receive a post that protrudes from the distal bearing surface of the baseplate;

disposing the post of the baseplate into the glenoid through the drilled hole;

securing a plurality of peripheral bone screws into the glenoid through one or more screw holes defined in the baseplate;

laterally inserting a removable collet into a throughbore defined in the baseplate, wherein the throughbore extends along a proximal-distal axis of the baseplate of the post; and

securing a first prosthetic component of the prosthetic shoulder implant onto a proximal bearing surface of the baseplate such that a coupling element protruding from a distal bearing surface of the first prosthetic component is secured to the collet within the throughbore of the baseplate,

wherein the first prosthetic component is a glenosphere component having an integrated locking screw protruding from a distal bearing surface thereof.

35. A method of implanting a shoulder prosthetic implant in a scapula of a patient, comprising:

reaming a glenoid of a scapula such that a surface of the glenoid is complementary to a distal bearing surface of a baseplate of a prosthetic shoulder implant;

drilling a hole into the glenoid to receive a post that protrudes from the distal bearing surface of the baseplate;

disposing the post of the baseplate into the glenoid through the drilled hole;

securing a plurality of peripheral bone screws into the glenoid through one or more screw holes defined in the baseplate;

laterally inserting a removable collet into a throughbore defined in the baseplate, wherein the throughbore extends along a proximal-distal axis of the baseplate of the post; and

securing a first prosthetic component of the prosthetic shoulder implant onto a proximal bearing surface of the baseplate such that a coupling element protruding from a distal bearing surface of the first prosthetic component is secured to the collet within the throughbore of the baseplate,

wherein the removable collet comprises a plurality of compressible arms, and the method further comprising:

removing the collet from within the throughbore of the baseplate using a tool by laterally inserting the tool into the throughbore of the baseplate, rotating a distal head of the tool to engage the threaded portion of the plurality of arms, continue rotating the distal head until the distal head radially compresses the plurality of arms away from a recessed sidewall portion of the throughbore, and proximally pulling the collet out of the throughbore.

* * * * *