US 20080306325A1

(19) United States

(12) Patent Application Publication

Burnett et al.

(10) Pub. No.: US 2008/0306325 A1

(43) Pub. Date: Dec. 11, 2008

(54) METHOD AND APPARATUS FOR MAGNETIC INDUCTION THERAPY

(75) Inventors: **Daniel R. Burnett**, San Francisco, CA (US); **Christopher Hermanson**, Santa Cruz, CA (US)

Correspondence Address:
Mitchell P. Brook
LUCE, FORWARD, HAMILTON & SCRIPPS LLP
11988 EL CAMINO REAL, SUITE 200
SAN DIEGO, CA 92130 (US)

(73) Assignee: **EMKinetics**, Santa Cruz, CA (US)

(21) Appl. No.: **11/866,329**

(22) Filed: **Oct. 2, 2007**

Related U.S. Application Data

(60) Provisional application No. 60/848,720, filed on Oct. 2, 2006.

Publication Classification

(51) **Int. Cl.**
A61N 2/02 (2006.01)

(52) **U.S. Cl.** **600/13**

(57) **ABSTRACT**

An energy emitting apparatus for providing a medical therapy includes one or more energy generators, a logic controller electrically connected to the one or more energy generators, and one or more sensors for detecting electric conduction in a target nerve that are connected to the logic controller. The one or more energy generators produce energy focused on the target nerve upon receiving a signal from the logic controller, and the energy is varied by the logic controller according to an input provided by the one or more sensors. In one embodiment, the energy emitting apparatus is an apparatus for magnetic induction therapy that includes one or more conductive coils disposed in an ergonomic housing that produce a magnetic field focused on the target nerve upon receiving an electric current from the logic controller based on an input provided by the one or more sensors.

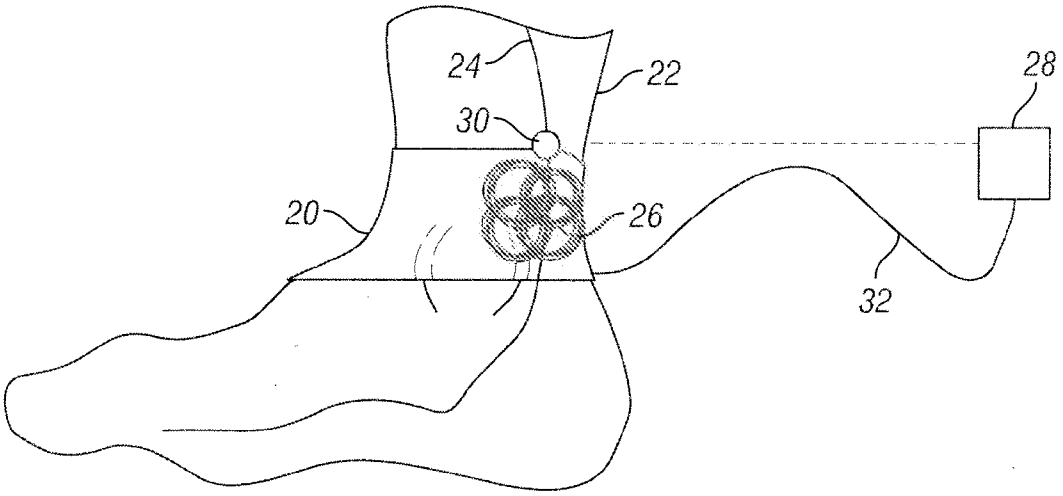

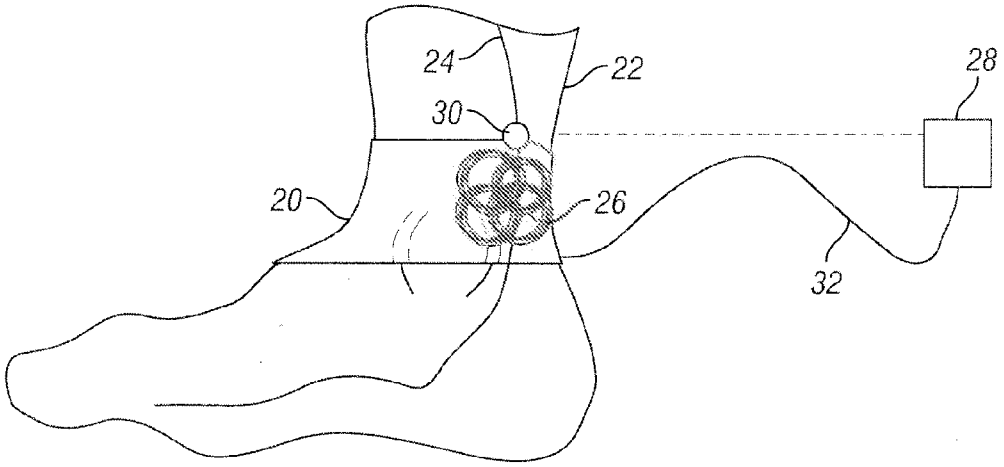

FIG. 1

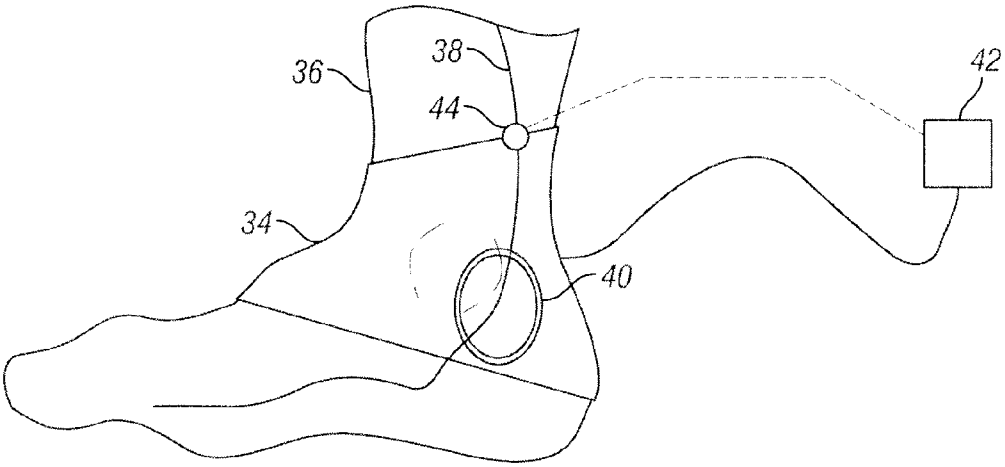

FIG. 2

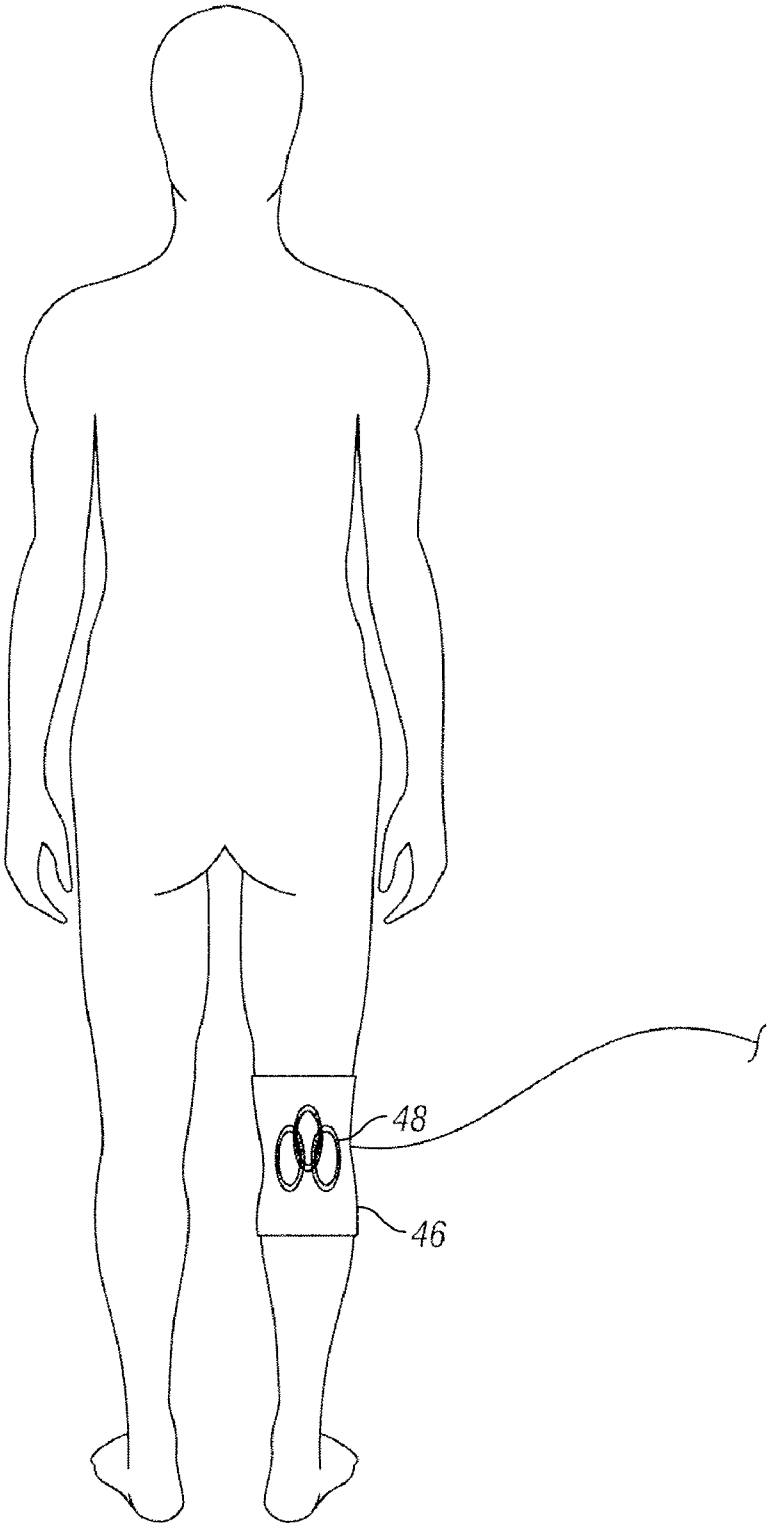

FIG. 3

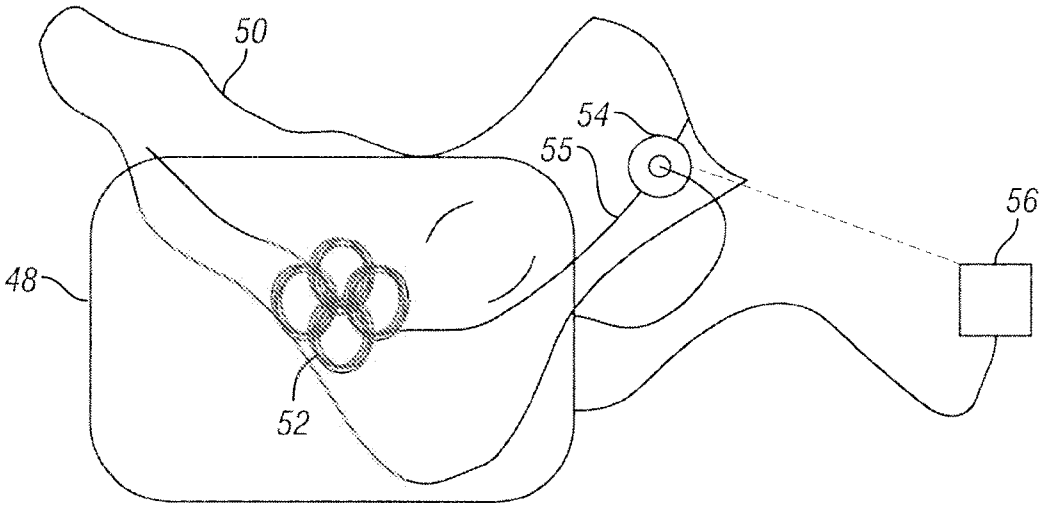

FIG. 4

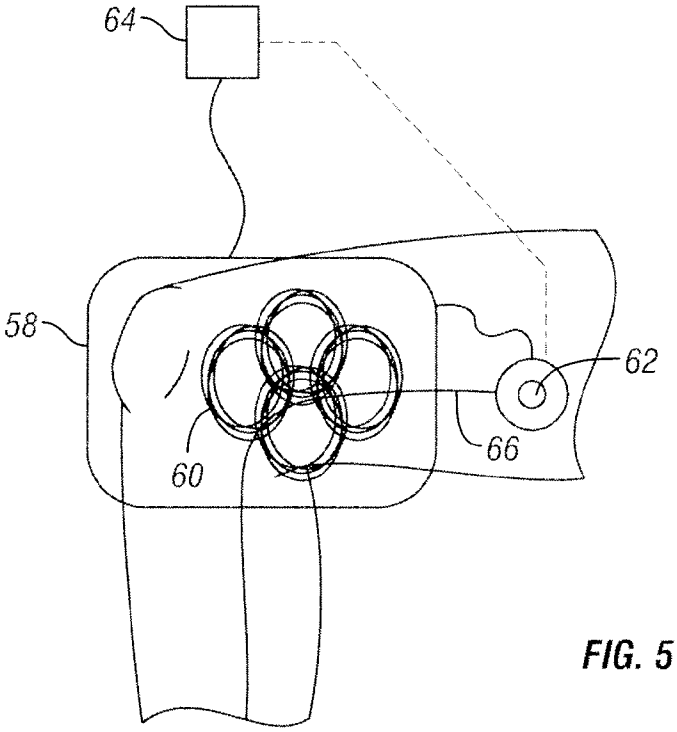

FIG. 5

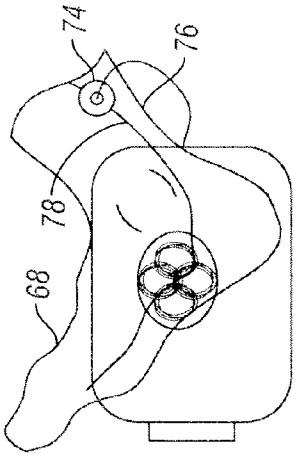

FIG. 6B

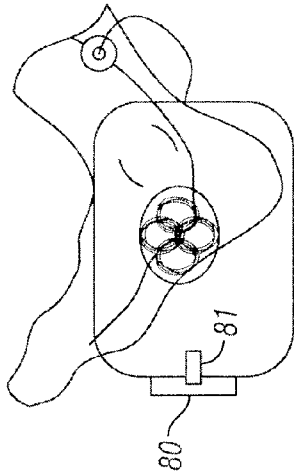

FIG. 6D

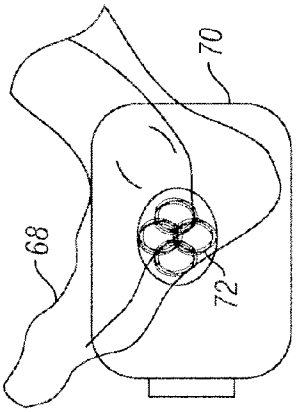

FIG. 6A

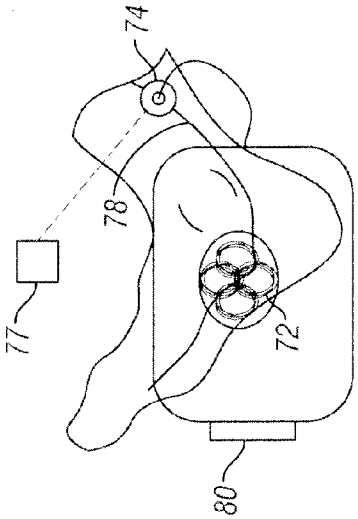

FIG. 6C

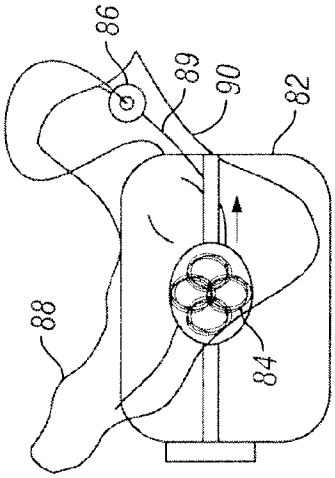

FIG. 7A

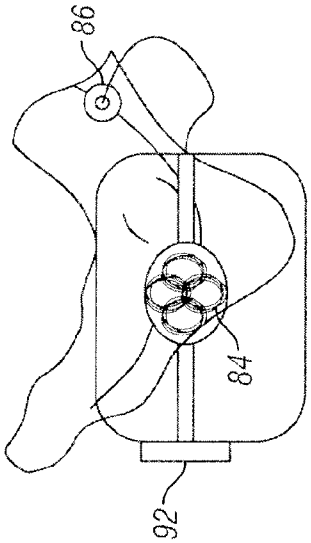

FIG. 7B

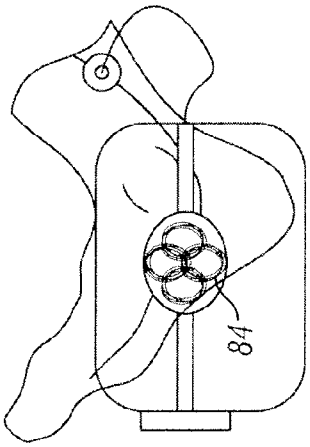

FIG. 7C

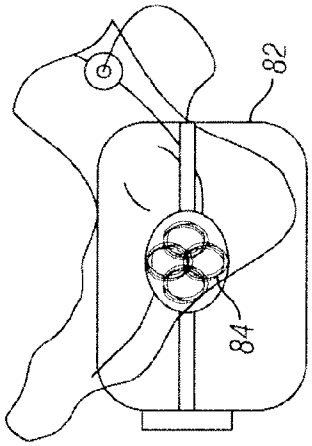

FIG. 7D

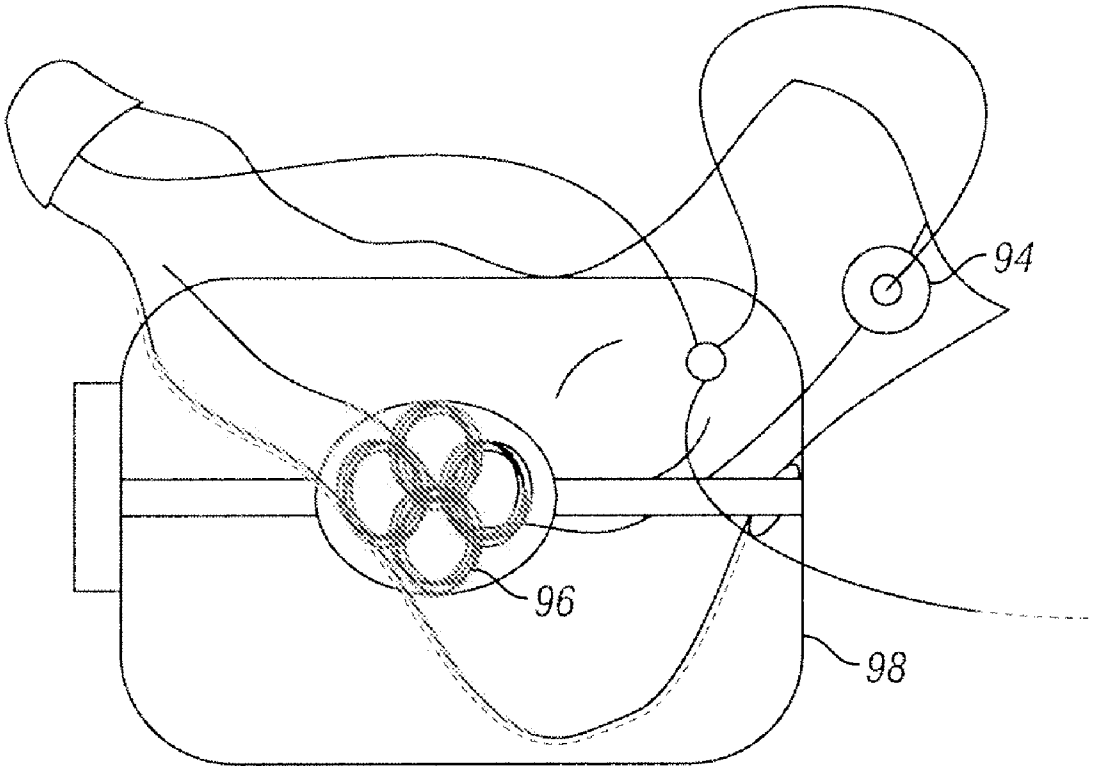

FIG. 8

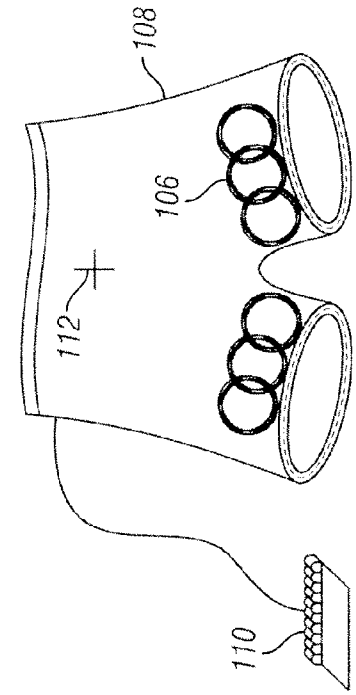

FIG. 9B

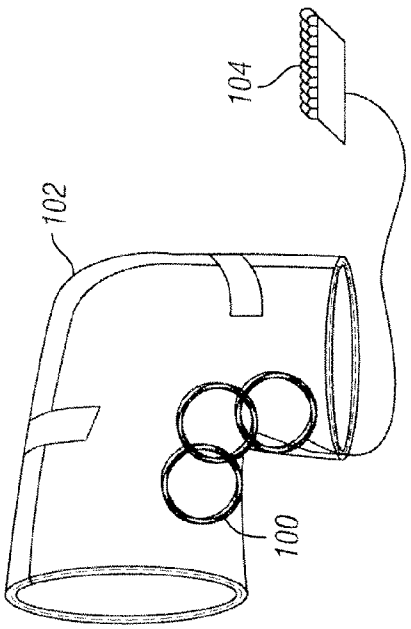

FIG. 9A

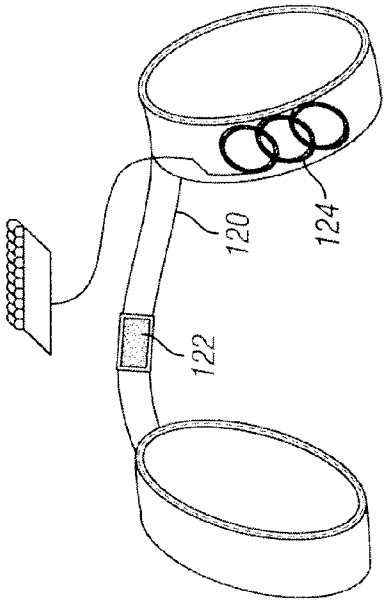

FIG. 9D

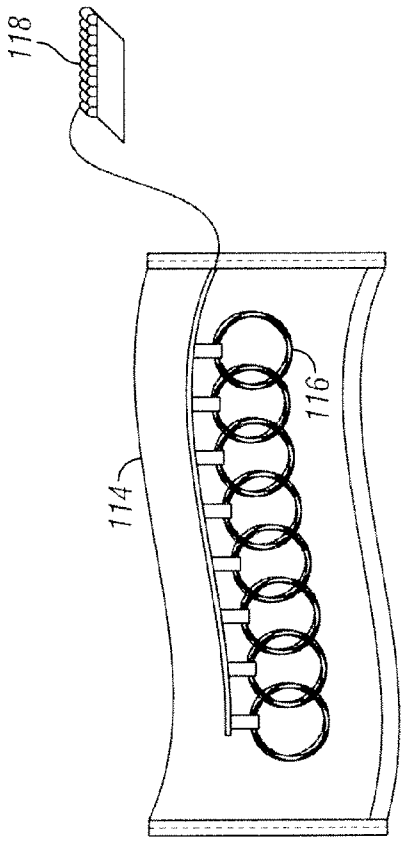

FIG. 9C

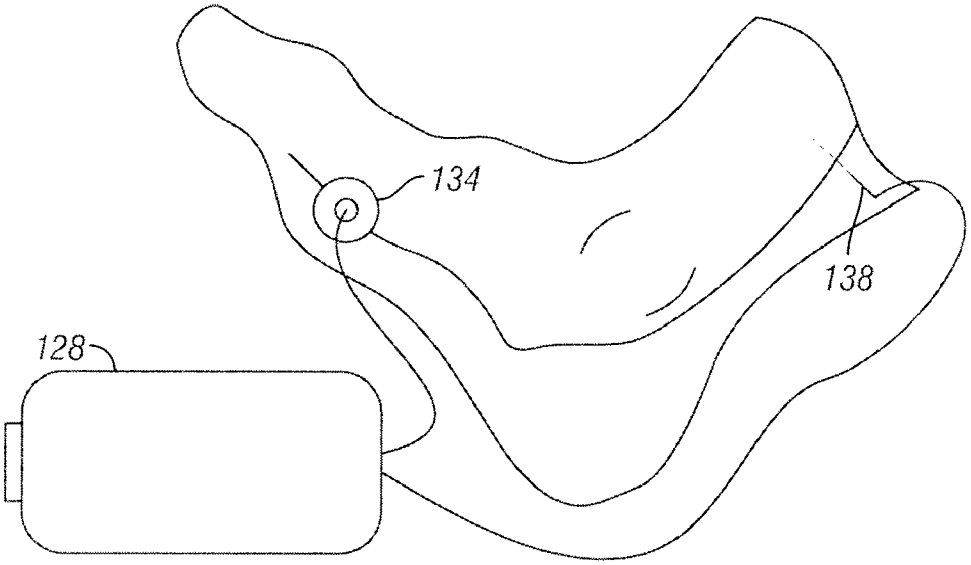

FIG. 10

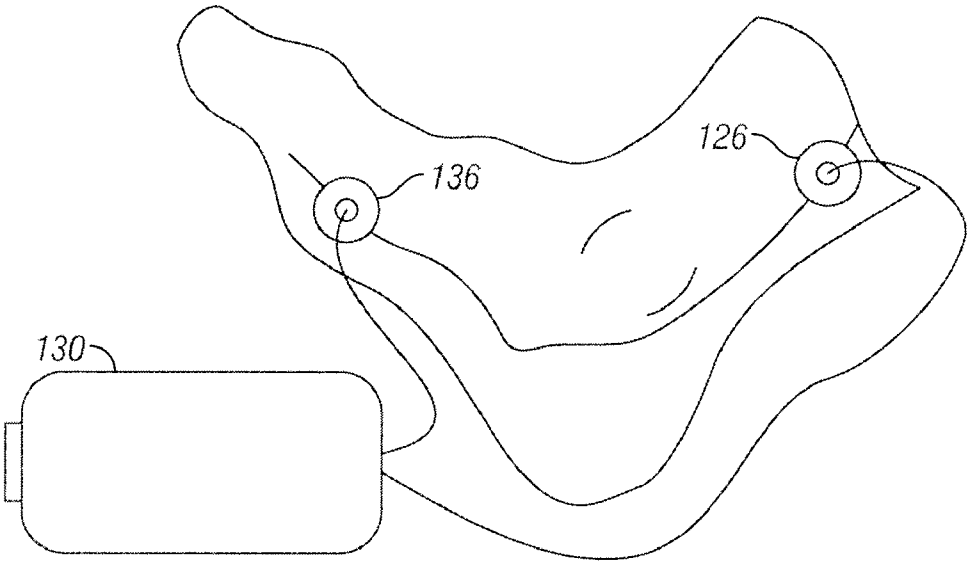

FIG. 11

METHOD AND APPARATUS FOR MAGNETIC INDUCTION THERAPY

CROSS-REFERENCE TO RELATED APPLICATIONS

[0001] The present application claims priority to U.S. Provisional Patent Application Ser. No. 60/848,720, filed on Oct. 2, 2006 and titled: "Method and Apparatus for Magnetic Induction Therapy."

FIELD OF THE INVENTION

[0002] The present invention relates to energy emitting apparatus and methods for providing a medical therapy. In one embodiment, the energy emitting apparatus is an ergonomic wrap or cradle that contains conductive coils generating a magnetic field directed to a target nerve.

BACKGROUND OF THE INVENTION

[0003] Overactive bladder ("OAB") and urinary incontinence ("UI") affect over 16% of the American population each year, or approximately 34 million men and women. Outside of the United States, OAB and UI affects over 46 million Europeans. The economic cost of OAB and UI is estimated to be in excess of $12 billion a year in the United States alone.

[0004] Due to the social stigmas attached to OAB and UI and to misunderstandings related to the symptoms associated with OAB and UI, only 40% of the affected individuals in the United States seek medical treatment. Of those 13.6 million Americans seeking medical treatment, nearly 30% or 4 million individuals are reportedly unsatisfied with their current therapy.

[0005] Known treatments for OAB and UI include exercise and behavioral modifications, pharmacological therapies, surgical intervention and neuromodulation, but each of these treatments exhibits severe limitations.

[0006] Exercise and behavioral modifications often require patients to adhere to stringent routines, including scheduled voiding, maintenance of a bladder diary, and intense exercise regimens. While this type of treatment may be a viable option for a small group of highly dedicated individuals, its daily impact on a person's life makes it unattractive for most patients.

[0007] Pharmacological intervention is the most widely prescribed therapy for OAB and UI. Unfortunately, patients often suffer from side effects related to their drug therapies. Such side effects are sometimes serious and are particularly pronounced in elderly patient populations that tend to use a plurality of medications. In addition, approximately 30% of all patients subjected to pharmacological therapies appear to be dissatisfied with the efficacy of their prescribed treatments.

[0008] Surgical intervention is extremely invasive and often results in a long-term requirement for catheterization that may become permanent in some instances. The negative impact of these procedures on the patient's quality of life and their high expense make surgical intervention a recommended option only when all other treatment options have been exhausted.

[0009] Neuromodulation is another available therapy for OAB and UI. In general, pulsed electromagnetic stimulation ("PES") has proven to have beneficial effects in a variety of medical applications. The related scientific principle is that an electric current passing through a coil generates an electromagnetic field, which induces a current within a conductive material placed inside the electromagnetic field.

[0010] More particularly, PES has been shown to be an effective method of stimulating a nerve positioned within the electromagnetic field, thereby affecting a muscle controlled by that nerve. For example, in the paper titled "Contactless Nerve Stimulation and Signal Detection by Inductive Transducer" presented at the 1969 Symposium on Application of Magnetism in Bioengineering, Maass et al. disclosed that a nerve threading the lumen of a toroid could be stimulated by a magnetic field of 0.7 Volt peak amplitude and a 50 μs duration in a monitor wire, and that such stimulation could generate a contraction of major leg muscles in anesthetized mammals.

[0011] Various attempts were made in the prior art to use PES for treating a variety of ailments. For example, U.S. Pat. No. 4,548,208 to Niemi discloses an apparatus for inducing bone growth by generating an electric current in the body through the external application of an electromagnetic field. Such apparatus includes opposing clamps disposed on a limb and may optionally include feedback coils and a microprocessor for sensing the magnetic field, so to avoid an overcurrent mode. Therefore, this apparatus optimizes the magnetic field on the basis of measurements of the generated magnetic field.

[0012] U.S. Pat. No. 4,940,453 to Cadwell discloses a method and apparatus for magnetically stimulating the neural pathways of a higher level organism. In this invention, a sinusoidally fluctuating current flow is created through a coil that overlies neurons to be stimulated, and frequency of the current flow and frequency of the magnetic field produced by the coil predetermined to correspond to the time constant of the neurons to be stimulated. Sensors for sensing coil conditions, such as coil temperature, may also be included.

[0013] U.S. Pat. No. 5,000,178 to Griffith discloses an electrical to electromagnetic transducer for applying electromagnetic energy to damaged parts of a living body by directing electromagnetic radiation to a certain damaged body part. Electromagnetic radiation is initially generated by a dipole consisting of a bar of high permeability material wrapped with an electrically conductive coil. Magnetic fields, which are generated away from the damaged body part, intersect a conductive shield and establish eddy currents, which in turn generate magnetic fields opposite and nearly equal to the magnetic fields generated by the electromagnetic source. The resultant electromagnetic fields reinforce the electromagnetic field directed towards the damaged body part and diminish the electromagnetic field directed away from the damaged body part.

[0014] U.S. Pat. No. 5,014,699 to Pollack et al. discloses a non-invasive, portable electromagnetic therapeutic method and apparatus for promoting the healing of damaged or diseased living tissue, including fractured bone. These method and apparatus involve generating a signal that has a series of substantially symmetric voltage cycles of bursted pulses with narrow pulse widths of 0.5 to 20 microseconds, and further involve converting the signal into an electromagnetic field extending into an area that contains tissue to be healed. This invention provides for no feedback on the efficiency of the applied stimulation.

[0015] In a paper titled "Selective Stimulation and Blocking of Sacral Nerves: Research Setup and Preliminary Results," published in Annual International Conference of the IEEE Engineering in Medicine and Biology Society, Vol. 13,

No. 2, 1991, Wijkstrda et al. used an external pulsed magnetic coil to stimulate a peripheral nerve for the treatment of urinary incontinence. The authors used a large magnetic field produced by a single coil to ensure that the nerve was fired and the resulting nerve conduction was frequently painful or intolerable. In addition, coil alignment was problematic because an internally implanted coil was utilized, which had to be aligned with the fully external magnetic field to stimulate the nerve. Due to the difficulty in positioning the device, the practical application of this therapy does not permit home healthcare usage without a preset alignment and monitoring of the nerve, and no provision was made to insure that the nerve was actually being stimulated or to adjust the device in response to commonly occurring physiologic and anatomic variations in nerve locations.

[0016] U.S. Pat. Nos. 5,181,902 Erickson et al. and 5,314,401 to Tepper disclose pulsed electromagnetic field ("PEMF") transducer systems usable to perform PEMF therapies (such as after spinal fusion) by generating flux-aided electromagnetic fields. The drive electronics includes a PEMF processor that executes a PEMF program for controlling the activation of the electromagnetic fields (field strength and cycle).

[0017] In a paper titled: "Magnetic Stimulation of the Bladder in Dogs" presented at the 1993 AAEM Annual Meeting, the abstract of which was published in the Muscle & Nerve issue of October 1993, Lin et al. disclosed that magnetic stimulation could be employed to stimulate the cortex, spinal nerves and peripheral nerves of dogs through direct trans-abdominal stimulation of the detrusor muscles or through stimulation of the lumbosacral roots.

[0018] As shown, the prior art makes no provision to measure the efficacy of PES treatment, causing patients to be treated improperly, either by an insufficient or excessive exposure to PES. Other attempts to monitor PES dosage in the prior art exhibit serious drawbacks. For example, U.S. Pat. No. 5,518,495 to Kot discloses an apparatus for the treatment of arthritis utilizing a magnetic field therapy, which includes an adjustable voltage source that is connected to a source of line voltage and a coil connected to the adjustable voltage source. This apparatus has no feedback system to advise a healthcare provider of the efficiency of the treatment.

[0019] U.S. Pat. No. 5,984,854 to Ishikawa et al. discloses a method for treating urinary incontinence based on delivering a train of current pulses through one or more magnetic stimulation coils so to induce a train of magnetic flux pulses, which then induce an eddy current within the body and stimulates a group of pelvic floor muscles, the pudendal nerve, the external urethral sphincter, or the tibial nerve. While this method includes the use of pulsed electromagnetic for treating urinary incontinence, no specific components are envisioned to facilitate the placement of the magnetic coils over a targeted region of the body or a system for monitoring the efficiency of the therapy being applied.

[0020] U.S. Pat. No. 6,086,525 to Davey et al. discloses a magnetic nerve stimulator that includes a core constructed from a material having a high field saturation having a coil winding disposed thereon. A thyrister capacitive discharge circuit pulses the device, and a rapidly changing magnetic field is guided by the core, preferably made from vanadium permendur.

[0021] U.S. Pat. No. 6,701,185 to Burnett et al. also discloses an electromagnetic stimulation device that includes a plurality of overlapping coils, which can be independently energized in a predetermined sequence such that each coil will generate its own independent electromagnetic field and significantly increase the adjacent field. Unfortunately, none of these patents provides a system for monitoring the efficiency of the therapy in progress, either with respect to the proper positioning of the winding over the area to be treated or of the intensity of the magnetic field to be applied.

[0022] Other PES therapies require the implantation of devices into the patient, with the consequent discomfort, risk and cost to the patient. For example, U.S. Pat. No. 6,735,474 to Loeb et al. discloses a method and system for treating UI and/or pelvic pain by injecting or laparoscopically implanting one or more battery- or radio frequency-powered microstimulators that include electrodes placed beneath the skin of the perineum and/or adjacent the tibial nerve.

[0023] U.S. Pat. No. 6,941,171 to Mann et al. describes a method and a system for treating incontinence, urgency, frequency, and/or pelvic pain that includes implantation of electrodes on a lead or a discharge portion of a catheter adjacent the perineal nerve(s) or tissue(s) to be stimulated. Stimulation pulses, either electrical or drug infusion pulses, are supplied by a stimulator implanted remotely through the lead or catheter, which is tunneled subcutaneously between the stimulator and stimulation site.

[0024] Other PES therapies in the prior art involve the use of electrodes placed on or beneath the skin of a patient. Recent data on invasive, needle-based PES of the posterior tibial nerve in individuals with OAB and UI indicates that PES can modulate bladder dysfunction through its action on the pudendal nerve and the sacral plexus, which provide the major excitatory input to the bladder.

[0025] In a paper titled "Percutaneous Tibial Nerve Stimulation via Urgent® PC Neuromodulation System—An Emerging Technology for managing Overactive Bladder," which was published in Business Briefing: Global Surgery 2004, CystoMedix, Inc. disclosed that peripheral tibial nerve stimulation ("PTNS") had been found effective in treating OAB. The disclosed procedure involved the use of electrode and generator components, including a small 34-gauge needle electrode, lead wires and a hand-held electrical generator. However, the procedure requires the permanent implantation of an electrical stimulation device in the patient. One estimate put the cost of treatment at nearly $14,000 with additional routine care costs of $593 per patient per year. Additionally, risks of battery failure, implant infection, and electrode migration led to a high re-operation rate and made this procedure unattractive.

[0026] U.S. Pat. No. 7,117,034 to Kronberg discloses a method for generating an electrical signal for use in biomedical applications that includes two timing-interval generators. In this invention, skin-contact electrodes may be placed over an area of interest and a microprocessor may direct timing and sequencing functions, although such timing and sequencing functions are not related to the actual efficacy of the treatment while treatment is being performed.

[0027] U.S. Patent Application Publication No. 2005/0171576 to Williams et al. discloses an electro-nerve stimulation apparatus that includes a pulse generator, a first electrically conductive, insulated lead wire, a second electrically conductive, insulated lead wire, an electrically conductive transcutaneous electrode and an electrically conductive percutaneous needle electrode. Connected to one end of the first and second lead wires is a connector for electrically coupling with the pulse generator. In this invention, a percutaneous

needle electrode is inserted through the skin in proximity to the desired internal stimulation site and electric stimulation is employed, rather than pulsed electromagnetic stimulation. Moreover, the Williams invention does not contemplate mechanisms for facilitating use of the device by an untrained user, nor a monitoring of the applied therapy.

[0028] A neuromodulation alternative is a posterior tibial nerve stimulator, often referred to as SANS, but as is the case with other forms of neuromodulation, this procedure is invasive in nature and requires the insertion of a needle five centimeters into the patient's ankle region to stimulate the posterior tibial nerve. This procedure also requires a minimum of twelve sessions for initial treatment, possibly with additional sessions required for maintenance.

SUMMARY OF THE INVENTION

[0029] It is an object of the present invention to provide apparatus and methods for magnetic induction therapy, in which dosage of magnetic energy can be regulated according conduction in a target nerve exposed to the magnetic field.

[0030] It is another object of the present invention to provide apparatus and methods for magnetic induction therapy, in which the flow of magnetic energy can be adjusted directionally by the patient or a healthcare provider without altering the position of a housing containing conductive coils that produce the magnetic field.

[0031] It is a further object of the present invention to provide apparatus and methods for treating a variety of ailments by providing energy to a target nerve, for example magnetic energy, electrical energy or ultrasound energy, at a location and in an amount optimized by detecting conduction in the target nerve.

[0032] These and other objects of the present invention are achieved by providing an energy emitting apparatus for delivering a medical therapy that includes one or more energy generators, a logic controller electrically connected to the one or more energy generators, and one or more sensors for detecting electric conduction in a target nerve, which are connected to the logic controller. The one or more energy generators produce energy focused on the target nerve upon receiving a signal from the logic controller, and the applied energy is varied by the logic controller according to an input provided by the one or more sensors based on electric conduction in the target nerve. The feedback provided by the sensors to the logic controller about the efficacy of the applied treatment causes the logic controller to modulate the current transmitted to the coils.

[0033] The applied energy may be a magnetic field, an electrical field, an ultrasound, a visible light, or an infrared or an ultraviolet energy. When a magnetic field is applied, the energy-emitting device is an apparatus that provides a magnetic induction therapy and that includes one or more conductive coils disposed in an ergonomic housing. A logic controller is electrically connected to the one or more coils, and one or more sensors detect electric conduction in the target nerve and are connected to the logic controller so to provide a feedback to the logic controller. The conductive coils receive an electric current from the logic controller and produce a magnetic field focused on a target nerve, and the electric current fed by the logic controller is varied by the logic controller according to an input provided by the sensors, thereby causing amplitude, frequency or direction of the magnetic field, or the firing sequence of the one or more coils, to be varied according to the efficiency of the treatment provided to the target nerve. In different embodiments of the invention, the housing containing the conductive coils may be a flexible wrap, a cradle or a garment, and the coils may be overlapping and/or be disposed in different positions within the housing, so to generate a magnetic field on different body parts with the desired direction and amplitude.

[0034] The one or more coils may be stationary or movable within the housing, making it possible to optimize the direction of magnetic flow to the target nerve by disposing the coils in the most effective direction. In different embodiments, the coils may be movable manually by acting on a knob, lever, or similar type of actuator, or may be translated automatically by the logic controller in response to the input provided by the sensors. When a preferred position for the coils has been established, the coils may be locked in position and maintain that position during successive therapy sessions. In other embodiments, the sensors may be incorporated within the housing, or instead may be disposed on a body part of interest independently of the housing.

[0035] In still other embodiments of the invention, the inductive coils are disposed in a housing that is situated externally to a patient's body, and additional inductive coils are implanted into the body of the patient and are magnetically coupled to the external inductive coils. With this coil arrangement, energy may be transmitted from the external coils to the internal coils either to recharge or to activate an implantable device. In yet other embodiments of the invention, the electric current may varied by the logic controller both on the basis of an input provided by the one or more sensors and also an input provided by the patient according to a muscular response she has perceived, for example, the twitching of a toe after application of the magnetic field.

[0036] In yet other embodiments of the invention, the source of energy for nerve stimulation may be electrical energy and nerve conduction may be detected at a site sufficiently distant from the site of stimulation, so to enable detection of nerve conduction despite the confounding interference from the direct electrical stimuli. In these embodiments, direct electrical stimulation of nerve and muscle may be tailored to provide optimal therapy and, in the case of electrode migration or other electrode malfunction, to report lack of stimulation of the bodily tissues. Furthermore, these embodiments enable a reduction in power requirement, because control of the signal is provided by the sensor to the signal generator loop.

[0037] Methods of use of the above apparatus are also described herein.

BRIEF DESCRIPTION OF THE DRAWINGS

[0038] The drawings constitute a part of this specification and include exemplary embodiments of the invention, which may be embodied in various forms. It is to be understood that in some instances various aspects of the invention may be shown exaggerated or enlarged to facilitate an understanding of the invention.

[0039] FIG. **1** is a schematic view of an apparatus for magnetic induction therapy according to a first embodiment of the invention.

[0040] FIG. **2** is a schematic view of an apparatus for magnetic induction therapy according to a second embodiment of the invention.

[0041] FIG. **3** is a schematic view of an apparatus for magnetic induction therapy according to a third embodiment of the invention.

[0042] FIG. **4** is a schematic view of an apparatus for magnetic induction therapy according to a fourth embodiment of the invention.

[0043] FIG. **5** is a schematic view of an apparatus for magnetic induction therapy according to a fifth embodiment of the invention.

[0044] FIGS. **6**A-**6**D are schematic illustrations depicting a first method of use of an apparatus for magnetic induction therapy. This method is based on adjusting the position of the conductive coils so to optimize a magnetic flow applied to a target nerve.

[0045] FIGS. **7**A-**7**D are schematic illustrations of a second method of use of an apparatus for magnetic induction therapy. This method is based on locking the conductive coils in position once electrical conduction in a target nerve has been detected.

[0046] FIG. **8** is a schematic view of an embodiment of the invention that includes a plurality of sensors.

[0047] FIGS. **9**A-**9**D are schematic representations of different garments adapted to operate as apparatus for magnetic induction therapy according to the principles of the present invention.

DETAILED DESCRIPTION OF EMBODIMENTS OF THE INVENTION

[0048] Detailed descriptions of embodiments of the invention are provided herein. It is to be understood, however, that the present invention may be embodied in various forms. Therefore, the specific details disclosed herein are not to be interpreted as limiting, but rather as a representative basis for teaching one skilled in the art how to employ the present invention in virtually any detailed system, structure, or manner.

[0049] Referring first to FIG. **1**, a first embodiment of the invention includes a coil wrap **20**, which is depicted as disposed over ankle **22** circumferentially to surround a portion of tibial nerve **24**. Because tibial nerve **24** is targeted, this embodiment is particularly suited for the treatment of OAB and UI. In other embodiments of the invention, coil wrap **20** may be configured to surround other body parts that contain a portion of tibial nerve **24** or of other nerves branching from or connected to tibial nerve **24**, still making these embodiments suitable for treating OAB and UI. In still other embodiments of the invention, coil wrap **20** may be configured for surrounding body parts that contain other nerves when treatments of other ailments are intended.

[0050] Coil wrap **20** may be manufactured from a variety of materials suitable for wearing over ankle **22**. Preferably, coil wrap is produced from a soft, body-compatible material, natural or synthetic, for example, cotton, wool, polyester, rayon, Gore-Tex , or other fibers or materials known to a person skilled in the art as non-irritating and preferably breathable when tailored into a garment. Coil wrap **22** may even be manufactured from a molded or cast synthetic material, such as a urethane gel, to add extra comfort to the patient by providing a soft and drapable feel. Additionally, coil wrap **20** may be produced from a single layer of material or from multiple material layers and may include padding or other filling between the layers.

[0051] Coil wrap **20** contains one or more conductive coils **26** arranged to produce a pulsed magnetic field that will flow across tibial nerve **24** and generate a current that will flow along tibial nerve **24** and spread along the length of tibial nerve **24** all the way to its sacral or pudendal nerve root origins. Coils **26** may be a single coil shaped in a simple helical pattern or as a figure eight coil, a four leaf clover coil, a Helmholtz coil, a modified Helmholtz coil, or may be shaped as a combination of the aforementioned coils patterns. Additionally, other coil designs beyond those mentioned hereinabove might be utilized as long as a magnetic field is developed that will encompass tibial nerve **24** or any other target nerve. When a plurality of coils is utilized, such coils may be disposed on a single side of ankle **22**, or may be disposed on more than one side, for example, on opposing sides, strengthening and directionalizing the flow of the magnetic field through tibial nerve **24** or other peripheral nerves of interest.

[0052] Coil wrap **20** is preferably configured as an ergonomic wrap, for example, as an essentially cylindrical band that can be pulled over ankle **22**, or as an open band that can be wrapped around ankle **22** and have its ends connected with a buckle, a hoop and loop system, or any other closing system known to a person skilled in the art. By properly adjusting the position of coil wrap **20** over ankle **22**, a patient or a health care provider may optimize the flow of the magnetic field through tibial nerve **24**, based on system feedback or on sensory perceptions of the patient, as described in greater detail below.

[0053] The electric current that produces the magnetic field by flowing through coils **26** is supplied by a programmable logic controller **28**, which is connected to coils **26**, for example, with a power cord **32**. A sensor **30** that feeds information to logic controller **28** is also provided, in order to tailor the strength of the magnetic field and control activation of coils **26** based on nerve conduction. The purpose of sensor **30** is to detect and record the firing of the target nerve and to provide related information to logic controller **28**, so to render the intended therapy most effective. For example, sensor input may cause logic controller **28** to alter the strength or pulse amplitude of the magnetic field based on sensor input, or fire the coils in a certain sequence.

[0054] In this embodiment, as well as in the other embodiments described hereinafter, sensor **30** may include one or more sensor patches and may be placed at different distances from the region of direct exposure to the magnetic field. For example, sensor **30** may be configured as a voltage or current detector in the form of an EKG patch and may be placed anywhere in the vicinity of the target nerve to detect its activation. For ease of description, the term "coils" will be used hereinafter to indicate "one or more coils" and "sensor" to indicate "one or more sensors," unless specified otherwise.

[0055] By virtue of the above described arrangement, coil wrap **20** provides a reproducibly correct level of stimulation during an initial therapy session and during successive therapy sessions, because the presence or absence of nerve conduction is detected and, in some embodiments, measured when coil wrap **20** is first fitted and fine-tuned on the patient. In addition to properly modulating the applied magnetic field, the positioning of coils **26** over ankle **22** may also be tailored according to the input provided by sensor **30**, so to fine-tune the direction of the magnetic field. Such an adjustment of the direction, amplitude, and level of the stimulation provided to the target nerve through the above described automated feedback loop, to ensure that peripheral nerve conduction is being achieved, is one of the key features in the present invention.

[0056] If the magnetic pulse does not substantially interfere with sensor **30**, sensor **30** may be placed directly within the field of stimulation, so that power supplied to the system may

be conserved. This is particularly important for battery-powered systems. Alternatively, sensor **30** may also be placed at a distance from the magnetic field and still properly detect neural stimulation.

[0057] In a method of use of coil wrap **20**, the amplitude and/or firing sequence of coils **26** may be ramped up progressively, so that the magnetic field is increased in strength and/or breadth until nerve conduction is detected, after which the applied stimulus is adjusted or maintained at its current level for the remainder of the therapy. The level of stimulation may be also controlled through a combination of feedback from sensor **30** and feedback based on perceptions of the patient. For example, the patient may activate a switch once she perceives an excessive stimulation, in particular, an excessive level of muscular stimulation. In one instance, the patient may be asked to push a button or turn a knob when she feels her toe twitching or when she experiences paresthesia over the sole of her foot. The patient will then continue pressing the button or keep the knob in the rotated position until she can no longer feel her toe twitching or paresthesia in her foot, indicating that that level of applied stimulation corresponds to an optimal therapy level. From that point on, the patient may be instructed to simply retain her foot, knee, or other limb within coil wrap **20** until therapy has been terminated while the system is kept at the optimal level. Adding patient input enables control of coil wrap **20** during outpatient treatments, because the patient is now able to adjust the intensity of the magnetic field herself beyond the signals provided to logic controller **28** by sensor **30**.

[0058] Detecting and, if the case, measuring conduction in one or more nerves along the conduction pathways of the stimulated nerve confirms that the target nerve has been stimulated, providing an accurate assessment of the efficiency of the applied therapy on the patient. A concomitant detection of muscle contraction may also confirm that the target nerve is being stimulated and provide an indication to the patient or to a healthcare provider as to whether stimulation has been applied at an excessive level in view of the anatomical and physiological characteristics of the patient.

[0059] Based on the foregoing, coil wrap **20** allows for a consistent, user-friendly targeting and modulation of the peripheral nerves via the posterior tibial nerve on an outpatient basis, in particular, the targeting and modulation of the pudendal nerve and of the sacral plexus. When multiple coils **26** are present, coils **26** may be activated simultaneously or differentially to generate the desired magnetic field. The direction and location of each of coils **26** may be reversibly or irreversibly adjusted by the healthcare provider or by the patient, customizing the location of the applied stimulation to the anatomy and therapy needs of each patient. After a healthcare provider has optimized position and firing sequence for each of coils **26**, the patient may be sent home with coil wrap **20** adjusted to consistently target the desired nerve. In one variant of the present embodiment, an automatic feedback system adjusts one or more of firing sequence, firing strength or position of coils **26** within coil wrap **20** during the initial setup and also during successive therapy sessions.

[0060] In summary, the teachings of the present invention include the creation of a loop consisting of feeding information on nerve conduction to logic controller **28** and on logic controller **28** tailoring the electrical current sent to coil wrap **20** according to the information received from sensor **26** based on whether or not the nerve is receiving the desired stimulation and, in some embodiments, the desired amount of stimulation. This arrangement offers an unparalleled level of therapy control and flexibility within a home care setting, because a consistent, repeatable stimulation of the target nerve can be attained. Aside from adjusting the position of coils **26** in accordance with the patient's anatomy and physiological variations, controlling pulse amplitude is also of great importance even during different therapy sessions with the same patient. For example, a patient with leg edema will encounter difficulties in properly adjusting coil wrap **20** based on whether her legs and ankles are swollen or not swollen, and the power required to penetrate to posterior tibial nerve **24** (in the case of a UI therapy) will vary greatly due to the variable depth of the nerve. Thus, having feedback provided by sensor **26** becomes a necessity for achieving an accurate dosage of the treatment rather than an option. Benchtop testing has demonstrated that a system constructed according to the present invention is capable of non-invasively generating electrical currents similar to those found in therapeutic electro-stimulation and to do so in different settings.

[0061] Referring now to FIG. **2**, a second embodiment of the invention will be described with reference to a coil wrap **34** disposed over ankle **36** for the purpose of treating UI by targeting tibial nerve **38**. In this second embodiment, one or more Helmholtz coils **40** are disposed within coil wrap **34** to create a more narrowly directed magnetic field over tibial nerve **38**. Like in the all other embodiments described herein, more than one coil (in the present embodiment, more than one Helmholtz coil **40**) may be placed within coil wrap **34** and be disposed in different positions within coil wrap **34**, in order to optimize magnetic flux over tibial nerve. For example, two Helmholtz coils may be disposed one opposite to the other within coil wrap **34**.

[0062] Having coil windings arranged along a common longitudinal axis, as required in a Helmholtz coil configuration, generates a more focused magnetic field and a more accurate targeting of tibial nerve **38** or of any other nerve. Like in the previous embodiment, the operation of coils **40** is controlled by a logic controller **42**, which is in turn connected to sensor **44** that monitors conduction in tibial nerve **44** and that generates a feedback to logic controller **42** about the efficiency of the therapy in progress. Therefore, like in the previous embodiment, the coupling of sensor **44** with logic controller **42** optimizes operation of coil wrap **34** according to results measured at the level of tibial nerve **38**. Also like in the previous embodiment, manual adjustments to the parameters of electric current provided by logic controller **42** to Helmholtz coil **40** may also be made manually by the patient or by a healthcare provider, and coil wrap **34** may be structured so that the position of Helmholtz coil **40** within coil wrap **34** is adjusted as desired either manually by the patient or by a healthcare provider, or automatically by logic controller **42**.

[0063] Referring now to FIG. **3**, a third embodiment of the invention includes a coil wrap **46** configured for wrapping over the popliteal fossa of a patient, in the region of the knee, to stimulate the posterior tibial nerve (not shown). The configuration and structure of coil wrap **46** reflect the body portion covered by coil wrap **46**, but the key system components of coil wrap **46**, such as the type, number and disposition of the coils (for example, the use of overlapping coils); the connections of the coils with a logic controller; and the use of one or more sensors (also not shown) to detect nerve conduction are all comparable to those in the previously described embodiments.

[0064] Referring now to FIG. **4**, a fourth embodiment of the invention includes a footrest or foot cradle **48**, which is structured to contain at least a portion of a foot **50**. One or more coils **52** are enclosed within cradle **48**, and a sensor **54** is disposed along the pathway of tibial nerve **55**, sensing conduction in tibial nerve **55**, and is also connected to a logic controller **56**. Coils **52**, sensor **54** and logic controller **56** may be arranged in different configurations, in the same manner as in the preceding embodiments.

[0065] Cradle **48** may be made from a variety of materials and may be monolithic, or have a hollow or semi-hollow structure to enable the movement of coils **52** within cradle **48**, as described in greater detail below. Preferably, cradle **48** has an ergonomically design allowing the ankle and heel of the patient to be retained within cradle **48**, in a position that matches the positions of stimulating coils **52** to the area of stimulation. The design of cradle **48** provides for a particularly comfortable delivery of therapy to patients that prefer to remain seated during their therapy, and enables the patient to perform the required therapy within a health care facility, or to take cradle **48** home, typically after an initial session and appropriate training in a health care facility. In that event, the patient will be trained to apply sensor **54** autonomously and to adjust stimulation to a comfortable level.

[0066] FIG. **4** shows coils **52** disposed as overlapping and the use of a single sensor patch **54** positioned proximally to the stimulation site. However, coil **52** may be configured as a single coil, a figure eight coil, a four leaf clover coil, a Helmholtz coil, a modified Helmholtz coil or a any combination of the aforementioned coils, or as any other coil design providing an effective stimulation to the target nerve. In addition, coils **52** may be fired individually, sequentially or simultaneously according to the feedback provided by sensor **54**.

[0067] In one variant of this embodiment, sensor **54** may include a conductive electrode patch that provides a feedback to logic controller **56** for adjusting, if necessary, the stimulation parameters of coils **52**. Alternatively, sensor **54** may be a sensor patch that is either applied to the skin of the patient or is incorporated within the structure of cradle **48**.

[0068] Referring now to FIG. **5**, a fifth embodiment of the invention includes a knee rest or knee cradle **58** that contains one or more conductive coils **60**, one or more sensors **62** and a logic controller **64**. The components of this embodiment are similar to those described with reference to the preceding embodiments, as regards the structure and materials of cradle **58**, the nature and disposition of coils **60**, the type and operation of sensor **62**, and the function and operation of logic controller **64**. Cradle **58** is configured to target the popliteal fossa of the patient, thus to target tibial nerve **66**. In that respect, the present embodiment is similar to the embodiment illustrated in FIG. **3**, but while the embodiment of FIG. **3** is configured as a wrap that may be worn while the patient is standing, the present embodiment is configured as a cradle that is more suited for treatment while the patient is sitting or laying down.

[0069] A method of use of the foot cradle depicted in FIG. **4** is described with reference to FIGS. **6**A-**6**D. During a first step illustrated in FIG. **6**A, foot **68** is disposed in cradle **70** that contains one or more conductive coils **72**, which are connected to a logic controller (not shown) that manages the flow of electric power to coils **72**.

[0070] During a second step illustrated in FIG. **6**B, a sensor **74** is disposed on foot **68** or on ankle **76** or on another appropriate portion of the patient's body, in order to detect conductivity in tibial nerve **78** or in another target nerve.

[0071] During a third step illustrated in FIG. **6**C, a healthcare provider analyzes conductivity measurements provided by sensor **74** (for example, by reading gauge **77**) and first adjusts the positioning of coils **72** until conduction in nerve **78** is detected. For example, the healthcare provider may rotate a knob **80**, slide a lever or actuate any other displacement system for coils **72** that is known in the art, so that coils **72** are translated until a magnetic field of the proper amplitude and intensity is applied to cause conduction in nerve **78**. The position of coils **72** is then fine-tuned manually until an optimal level of conduction in nerve **78** is attained, and the therapy is continued for a length of time as prescribed by the attending healthcare provider.

[0072] During a fourth, optional step illustrated in FIG. **6**D, settings for successive therapy sessions are set, for example by locking knob **80** (in one embodiment, with a pin **81**) so that the healthcare provider or the patient repeat the therapy using the predetermined settings. Alternatively, the patient may be trained to adjust the amplitude and/or strength of the applied magnetic field, as each therapy session requires.

[0073] While the present method has been described with regard to foot cradle **70**, the same method steps may be envisioned for coil wraps or cradles of different configurations, for example, for the coil wraps and cradles described with reference to the previous figures.

[0074] In an alternative embodiment, the logic controller (not shown) may automatically adjust coil positioning to optimize therapy during the initial and successive sessions. While this set-up may be more difficult to implement, it also provides for an accurate targeting of the target nerve during each therapy session, regardless of alterations in patient positioning or changes to the anatomy of the patient (for example, when a foot is swollen). In this embodiment, the device simply varies the orientation of coils **84** until stimulation has been sensed.

[0075] Further, coils **84** may be translated along a single direction (for example, horizontally) or along a plurality of directions, to provide for the most accurate positioning of coils **84** with respect to the target nerve.

[0076] A second method of use of the foot cradle depicted in FIG. **4** is described now with reference to FIG. **7**. While this second method is also described with reference to a foot cradle **82** employing one or more coils **84** that have a reversibly lockable, adjustable orientation, the present method may be equally implemented with a body-worn coil wrap, such as those described with reference to the previous figures, or to other embodiments of the invention. In this method, the patient or the healthcare provider adjusts the positioning of coils **84** to detect conductivity in target nerve **89**.

[0077] The position of coils **84** may be translated in different directions (in the illustrated embodiment, may be translated horizontally) and may be locked in an initial position once conduction in nerve **89** is detected by a sensor (for example, sensing patch **86**)

[0078] More particularly, FIG. **7**A illustrates the initial positioning of foot **88** into cradle **82** and of sensor patch **86** on ankle **90** or other appropriate body part of the patient. After proper positioning of foot **88** is attained, a knob **92** (or other equivalent device) may be employed to adjust the position of coils **84**, based on the signals (for example, nerve conduction signals) provided by sensor patch **86**, as shown in FIG. **7**B.

[0079] With reference to FIG. **7**C, after neural conduction is detected, coils **84** are locked in place, and, with further reference to FIG. **7**D, foot cradle **82** retains coils **84** locked in position for further use in a home or healthcare office environment. Therefore, in the present method, the patient or a healthcare provider simply adjusts coil position by sliding coils **84** back and along one axis until electric conduction in the target nerve is detected, although adjustments along all three axes may be possible in different variants of the present embodiment.

[0080] Referring now to FIG. **8**, a sixth embodiment of the invention relates to the use of multiple sensors. While FIG. **8** depicts an embodiment shaped as a foot cradle **98**, it should be understood that the following description also relates to any other design, whether shaped as a cradle or a wrap or otherwise. The plurality of sensors **94** described herein may detect a variety of physiologic changes, including neural impulses, muscular contraction, twitching, etc. that may occur with neural or muscular stimulation.

[0081] One or more of the illustrated sensors **94** may be employed over body regions being stimulated (for example, back, leg, arm, neck, head, torso, etc.) and may be either incorporated within an actual cradle or wrap or, otherwise, be applied separately from the cradle or the wrap.

[0082] Sensors **94** may be structured as disposable, single-use, EKG-type patches that are attached to the body outside of cradle **98** along the nerve conduction pathway and are then connected to the logic controller (not shown) before beginning therapy. This arrangement provides for an intimate body contact of sensors **94** without the risk of infection or other detrimental side effects that may be present with transcutaneous devices. Sensors **94** may be employed both for beginning and for monitoring the stimulation therapy; more specifically, sensors **94** may be employed during the beginning of the therapy to optimize the strength of the magnetic field and/or to adjust the positioning of coils **96** within the cradle **98**. Once therapy has begun, sensors **94** continue to monitor nerve conduction to ensure that the correct level of stimulation is being provided. In the event that for some reason nerve conduction decays during therapy, the logic controller can automatically adjust the magnetic field, ensuring that the appropriate therapy is delivered for the appropriate amount of time.

[0083] One or more of sensors **94** in this embodiment, or any of the embodiments described herein, may take the form of an inductive coil designed to receive impulses from the underlying nerves, so that inductive technologies may be used to both stimulate the nerve or tissues as well as to record the effect of the stimulation on nerves or tissues. Any of sensors **94** may be connected to the logic controller through one or more connection modes, including, but not limited to, wireless signals, wired signals, radio frequencies, Bluetooth, infrared, ultrasound, direct switching of the current circuit, etc., so long as communication between the sensor and the device is effective.

[0084] During implementation of the present method, a healthcare provider may simply elect to use sensors **94** to adjust the device, for example, to lock coils **96** into position, during the first therapy session and not require the use of sensors **94** during each successive therapy session.

[0085] Referring now to FIGS. **9**A-**9**D, there are shown different, non-limiting embodiments of the invention shaped as body worn ergonomic applicator garments. Each of these embodiments is shown with overlapping coils, although coils of any configurations may be used. Each of the wraps of FIGS. **9**A-**9**D corresponds to a coil wrap, into which a body part may be placed. These garments contain one or more sensors (not shown) that provide feedback to a logic controller (also not shown), or sensors may be applied separately from those garments. Systems may also be included for reversibly or irreversibly locking the coils within the applicator.

[0086] More particularly, FIG. **9**A illustrates an embodiment, in which coils **100** are embedded in a knee wrap **102** and are connected to a logic controller (not shown) by a connector **104**. FIG. **9**B instead illustrates an embodiment, in which coils **106** are disposed within an abdominal garment, for example shorts **108** and in which coils **106** are also connected to a logic controller (not shown) by a connector **110**. A marking **112** may be added on one side of shorts **108** to indicate wrap orientation. FIG. **9**C illustrates a coil wrap shaped like a band **114**, in which coils **116** are connected to a logic controller (not shown) by a connector **118**. When this embodiment is employed, band **114** may be wrapped around a body portion (for example, an arm) and be retained in place by a system known in the art, for example, a hook and loop system, a strap and buckle system, or simply a hook disposed at one end of band **114** for engaging fabric or other material in another portion of band **114**. FIG. **9**D illustrates an embodiment shaped as a shoulder strap **120**, the length of which may be adjusted by a buckle **122** and which has coils **124** disposed in one or more points, for example, at the joint between an arm and a shoulder as shown. Each of these embodiments includes one or ore sensors (not shown) that may coupled to the garment, or that may applied separately from the garment.

[0087] Other embodiments that are not illustrated include, bur are not limited to: a head worn garment, such as a cap; a neck worn garment, such as a neck brace; and a lower-back garment. Each garment and applicator may also utilize the locking, targeting coil feature described previously, without requiring the use of the any sensing components after a proper positioning of the coils in relation to the target nerve or nerves has been established.

[0088] Still other embodiments of the invention are depicted in FIGS. **10** and **11**. In these embodiments, the source of energy for nerve stimulation is electrical energy that is dispensed through a percutaneous stimulator, such as a percutaneous needle **124**, or a transcutaneous stimulator, such as an electrode **126**. As shown in FIG. **10**, an electrical pulse controller **128** is electrically connected both to percutaneous needle **124** and to sensor **134**, to provide the desired feedback and modulate the power to percutaneous needle **134**. In the embodiment of FIG. **11**, electrical pulse controller **130** is connected both to electrode **126** and to sensor **136**, and performs a function similar to that of electrical pulse controller **128**. With these embodiments, nerve conduction may be detected at a site sufficiently distant from the site of stimulation, so to enable detection of nerve conduction despite the confounding interference from the direct electrical stimuli. Further, direct electrical stimulation of nerve and muscle may be tailored to provide optimal therapy and, in the case of electrode migration or other electrode malfunction, to report lack of stimulation of the bodily tissues. Still further, these embodiments enable a reduction in power requirement, because control of the signal is provided by the sensor to the signal generator loop.

[0089] As shown, a device constructed according to the principles of the present invention provides a targeted and

precise stimulation of the posterior tibial nerve, or of other peripheral nerves, in a non-invasive manner by employing an ergonomic wrap or cradle that specifically targets the posterior tibial nerve in a consistent and repeatable manner. For example, in patients with OAB or UI, the novel, reversibly lockable movement of the coils and the use of a logic controller—sensor loop enables the application of a magnetic field that can be varied in location, amplitude and strength according to the amount of stimulation actually induced in one or more target nerves and of the response of the patient to the therapy. An apparatus according to the present invention may deliver any frequency of stimulation, including low frequencies, high frequencies, mid frequencies and ultrahigh frequencies, and overlapping and non-overlapping coils may be used to generate the desired field, although overlapping or Helmholtz coils are preferred due to their ability to target a broader region and achieve more thorough stimulation.

[0090] Ailments that may be treated through the use of apparatus and methods of the present invention include not only OAB and UI, but also obesity, depression, urinary incontinence, fecal incontinence, hypertension, pain, back pain, restless leg syndrome, Guillain Barre syndrome, quadriplegia, paraplegia, diabetic polyneuropthy, dyskinesias, paresthesias, dental procedure pain, knee osteoarthritis, anesthesia (pain relief during surgery), Alzheimer's disease, angina (chest pain from heart disease), ankylosing spondylitis, back pain, burn pain, cancer pain, chronic pain, dysmenorrhea (painful menstruation), headache, hemiplegia, hemiparesis (paralysis on one side of the body), labor pain, local anesthesia during gallstone lithotripsy, facial pain, trigeminal neuralgia, bruxism (tooth grinding) pain, myofascial pain, pregnancy-related nausea or vomiting, neck and shoulder pain, pain from broken bones, rib fracture or acute trauma, diabetic peripheral neuropathy, phantom limb pain, post-herpetic neuralgia (pain after shingles), postoperative ileus (bowel obstruction), irritable bowel syndrome, postoperative nausea or vomiting, postoperative pain, post-stroke rehabilitation, rheumatoid arthritis, skin ulcers, spinal cord injury, temporomandibular joint pain, detrusor instability, spinal muscular atrophy (in children), pain during hysteroscopy, gastroparesis, chronic obstructive pulmonary disease rehabilitation, carpal tunnel syndrome, soft tissue injury, multiple sclerosis, intermittent claudication, attention-deficit hyperactivity disorder (ADHD), cognitive impairment, knee replacement pain, achalasia, atopic eczema, bursitis, carpal tunnel syndrome, dementia, depression, dry mouth, dystonia, enhanced blood flow in the brain, enhanced blood perfusion of the uterus and placenta, esophageal spasm, fibromyalgia, fracture pain, Guillain-Barre syndrome, hemophilia, herpes, hip pain, interstitial cystitis, irritable bowel syndrome, pruritis, joint pain, labor induction, local anesthesia, menstrual cramps, muscle cramps, muscle spasticity, muscle strain or pain, musculoskeletal trauma, myofascial pain dysfunction syndrome, nerve damage, osteoarthritis, pain medication adjunct, pancreatitis, Raynaud's phenomenon, repetitive strain injuries, sacral pain, schizophrenia, shingles, shoulder subluxation, sickle cell anemia pain, Skin flap ischemia (during plastic surgery), sphincter of Oddi disorders, sports injuries, thrombophlebitis, tinnitus (ringing in the ear), restless legs, tremor, whiplash and neuralgias. In contrast to implantable nerve stimulators, this therapy is completely non-invasive and does not require a major surgery to implant a permanent nerve stimulation device. Moreover, this therapy can be controlled to optimize the level of therapy delivered according to power consumption and nerve stimulation requirements and need not be delivered by a professional healthcare provider.

[0091] In other embodiments of the invention, neural stimulation may be applied as electrical transcutaneous stimulation, for example, by inserting an invasive electrical needle into a target body part and by modulating stimulation is modulated on the basis of information sent back to the logic controller from the one or more sensors that are used to detect and/or maintain the correct level of stimulation. The transcutaneous electrical stimulation sensor may be placed in the body independently or be incorporated within the wrap and may provide, among other things, feedback as to the quality of the electrical connection to the skin, which is directly related to the burn risk inherently associated with this type of therapy. In fact, these methods of stimulation may not be optimal due to the resulting skin irritation and risk of potential burns, a very serious issue in the large percentage of patients that have neuropathies. Even when patches are applied to monitor transcutaneous stimulation very closely, the patches may still become displaced and allow a burn to occur. Moreover, potentially interfering electrical impulses may develop at the treatment site, creating a noisy environment for the detection of nerve conduction.

[0092] In still other embodiments of the invention, an external coil or coils may be inductively connected to an implanted coil or coils may be utilized. In these embodiments, an ergonomic applicator may be adjusted by the user or by a healthcare provider such to optimize inductive power transmission between the external and implanted coils. One or more sensors may be utilized to provide a feedback that the relative coil positions have been optimized, and the external coil may then be reversibly locked into position within the ergonomic applicator. Two applications of this embodiment relate to the transfer of power to recharge an implantable device, and to the transfer of power to activate an implantable device.

[0093] In the first application, when an implantable rechargeable device is utilized, the external coils may be used for recharging the implanted device by means of inductive fields generated by the external coils. The external coils may include circuitry that determines the amount of resistance encountered by the magnetic field or other electrical properties related to the quality and degree of the magnetic coupling that is being established. Based on this feedback, the position of the external coils may be adjusted manually or automatically to optimize the coupling achieved with during each recharging session. Alternatively, a sensor may be incorporated into the implantable device and may communicate the degree and quality of the magnetic coupling to the external coils and/or the connected circuitry via wireless communication, providing a feedback for the automatic or manual adjustment of the external recharging coils.

[0094] The coils within the ergonomic applicator may be reversibly locked into place for the duration of the recharge session, and the implantable device may also communicate to the external recharging unit that the implantable device has been fully recharged, terminating the recharging session has been completed. By providing for an intermittent recharging of an implanted device, an apparatus according to the present invention enables the implantable device to devote more power to performing its intended function optimally and with a lesser concern about protecting or extending battery life.

[0095] In the second application, the powering coils may contain circuitry to determine the amount of resistance

encountered by the applied magnetic field, or other electrical properties that may reflect the quality and degree of the magnetic coupling that is being achieved. Based on this feedback, the powering coils in the applicator may be adjusted manually or automatically to activate and optimize the coil coupling at the beginning of each therapy session. Alternatively, a sensor may be incorporated into the implantable device and communicate the degree and quality of the magnetic coupling externally via wireless communication, which may in turn provide feedback for the automatic or manual adjustment of the powering coil. In one variant of the present embodiment, the inductive coils may be magnetically coupled to a needle targeting the posterior tibial nerve.

[0096] An exemplary method of use of an apparatus according to the present invention on a patient suffering from UI and/or OAB includes the following steps:

[0097] The patient places a conductive wrap contained within a flexible material over a region of the ankle (or alternatively over the knee) to provide the required pulsed magnetic field. Alternatively, the patient may use an ergonomic foot/leg rest or cradle having embedded coils.

[0098] A sensor (for example, a sensor patch) is placed on the patient's body along the path of the nerve, ideally proximal to the stimulation site to ensure afferent nerve stimulation, and is connected to a logic controller.

[0099] A physician or healthcare provider adjusts the coils in the wrap or cradle until nerve conduction is achieved based on patient and sensor feedback. An optimal position is sought, and the coils may be reversibly locked into position within the conductive wrap or ergonomic cradle and remain in this position during subsequent use.

[0100] During the therapy session, the logic controller provides an electric current to the coils, generating an inductive magnetic field. In one embodiment, this field begins at low amplitude and slowly ramps up until nerve conduction exceeds a threshold level, as signaled by the sensor and possibly by the patient, who may feel motory conduction. Alternatively, one or more coils may also be activated to increase the covered area of stimulation in the event that stimulation does not occur with the initial coil configuration or is inadequate

[0101] The optimal stimulation may be determined in a variety of manners, for example, by measuring exposure to electromagnetic fields capable of generating a square wave electric signal at a frequency of 10-30 Hz at the targeted tissue depth. The square wave configuration of the signal may be generated via Fourier transformation or may be a ramped current generated in any manner.

[0102] The inductive magnetic pulses continue for an appropriate duration of use, for example, for 15-30 minutes. The sensor may remain in place during the entire therapy session to ensure that stimulation occurs consistently and to provide for appropriate corrections if nerve conduction deteriorated. The logic controller may be powered either by a portable power source such as a battery, or by or a fixed power source such as a traditional wall outlet.

[0103] The conductive wrap and/or ergonomic cradle is removed from the body when therapeutic stimulation is not being delivered, typically at the end of the therapy session.

[0104] The conductive wrap and/or ergonomic cradle is reapplied along with the sensor patch (ideally disposable) from time to time as indicated, for example, on a daily basis, and steps 4-8 are repeated.

[0105] The invention described herein may be applied to any body tissues, including nerve, muscle, skin, vasculature, or any other organ or tissue within the human body. Further, the devices and methods described herein may be used to treat any conditions suited for neuromodulation regardless of whether the stimulation source is an electromagnetic field, a direct electric current, a RF field, infrared energy, visible light, ultraviolet light, ultrasound, or other energy dispensing device.

[0106] While the invention has been described in connection with the above described embodiments, it is not intended to limit the scope of the invention to the particular forms set forth, but on the contrary, it is intended to cover such alternatives, modifications, and equivalents as may be included within the scope of the invention. Further, the scope of the present invention fully encompasses other embodiments that may become obvious to those skilled in the art and the scope of the present invention is limited only by the appended claims.

What is claimed is:

1. An apparatus for magnetic induction therapy comprising:

one or more conductive coils disposed in a housing;

a logic controller electrically connected to the one or more coils; and

one or more sensors connected to the logic controller for detecting electric conduction in a target nerve,

wherein the one or more conductive coils produce a magnetic field focused on the target nerve upon receiving an electric current from the logic controller, and

wherein the electric current is varied by the logic controller according to an input provided by the one or more sensors.

2. The apparatus of claim **1**, wherein the housing is a flexible wrap, a cradle, or a garment.

3. The apparatus of claim **1**, wherein the one or more coils are overlapping.

4. The apparatus of claim **1**, wherein the one or more coils are disposed in different positions in the housing, the different positions influencing the direction of the magnetic field.

5. The apparatus of claim **1**, wherein the one or more coils are movable within the housing to optimize magnetic flow to the target nerve.

6. The apparatus of claim **5**, wherein the one or more coils are movable manually by acting on an actuator, or are movable automatically by the logic controller according to the input provided by the one or more sensors.

7. The apparatus of claim **5**, wherein the one or more coils are movable and lockable in position.

8. The apparatus of claim **1**, wherein the one or more sensors are disposed within the housing.

9. The apparatus of claim **1**, wherein the one or more sensors are independent of the housing.

10. The apparatus of claim **1**, wherein the electric current is varied by the logic controller to control amplitude, frequency, or direction of the magnetic field, or firing sequence of the one or more coils.

11. The apparatus of claim **1**, wherein the one or more sensors are configured as one or more patches applied to a patient's skin.

12. The apparatus of claim **1**, wherein the one or more coils comprise one or more inductive coils that are external to a patient's body, and wherein comprising one or more inductive

coils are implanted into the patient's body and inductively coupled to the external inductive coils.

13. The apparatus of claim **12**, wherein power is transmitted from the external coils to the internal coils to recharge or activate an implantable device.

14. The apparatus of claim **1**, wherein the electric current is varied by the logic controller according to an input provided by the one or more sensors and is further varied according to a second input provided by a patient in response to a muscular response of the patient.

15. A method of magnetic induction therapy comprising the steps of:

providing one or more conductive coils disposed in a housing, a logic controller electrically connected to the one or more coils, and one or more sensors connected to the logic controller, the one or more sensors being capable of detecting electric conduction in a target nerve;

disposing the housing on a first portion of a patient's body;

disposing the one or more sensors on a second portion of the patient's body; and

causing the one or more conductive coils to produce a magnetic field focused on the target nerve upon receiving an electric current from the logic controller, the electric current being varied by the logic controller according to an input provided by the one or more sensors.

16. The method of claim **15**, wherein the first and second body portions are the same.

17. The method of claim **15**, further comprising the step of adjusting the disposition of the one or more coils in the housing, thereby optimizing the focusing of the magnetic field on the target nerve.

18. The method of claim **15**, further comprising the step of varying the electric current according to a muscular response in the patient.

19. The method of claim **15**, wherein providing the one or more conductive coils comprises providing the one or more conductive as one or more inductive coils external to a patient's body, further comprising the step of providing one or more inductive coils implanted into the patient's body and inductively coupled to the one or more external inductive coils.

20. The method of claim **15**, wherein the therapy is applied to a nerve selected to from the group consisting of the nerve that affects overactive bladder, urinary incontinence, fecal incontinence, obesity, depression, hypertension, pain, back pain, restless leg syndrome, Guillain Barre syndrome, quadriplegia, paraplegia, and neuralgia.

21. An energy emitting apparatus for providing a medical therapy, the apparatus comprising:

one or more energy generators;

a logic controller electrically connected to the one or more energy generators; and

one or more sensors connected to the logic controller, the one or more sensors being capable of detecting electric conduction in a target nerve,

wherein the one or more energy generators produce energy focused on the target nerve upon receiving a signal from the logic controller, and

wherein the energy is varied by the logic controller according to an input provided by the one or more sensors.

22. The energy emitting apparatus of claim **21**, wherein the energy is a magnetic energy, electrical energy, ultrasound energy, infrared energy, visible energy, or ultraviolet energy.

23. The energy emitting apparatus of claim **21**, wherein the one or more energy generators are movable and lockable in the housing for optimizing the focusing of the energy on the target nerve.

24. The energy emitting apparatus of claim **21**, wherein at least one energy generator is placed transcutaneously or transcutaneously.

25. The energy emitting apparatus of claim **21**, wherein the one or more energy generators comprise an electrical pulse controller.

* * * * *