US011307369B2

(12) **United States Patent**
Takano et al.

(10) **Patent No.: US 11,307,369 B2**
(45) **Date of Patent: Apr. 19, 2022**

(54) **ULTRA-SMALL FORM FACTOR OPTICAL CONNECTORS USED AS PART OF A RECONFIGURABLE OUTER HOUSING**

(71) Applicant: **Senko Advanced Components, Inc.**, Marlborough, MA (US)

(72) Inventors: **Kazuyoshi Takano**, Tokyo (JP); **Jimmy Jun-Fu Chang**, Worcester, MA (US)

(73) Assignee: **Senko Advanced Components, Inc.**, Marlborough (MA)

(*) Notice: Subject to any disclaimer, the term of this patent is extended or adjusted under 35 U.S.C. 154(b) by 0 days.

(21) Appl. No.: **17/370,057**

(22) Filed: **Jul. 8, 2021**

(65) **Prior Publication Data**

US 2021/0373262 A1 Dec. 2, 2021

Related U.S. Application Data

(63) Continuation of application No. 17/327,197, filed on May 21, 2021, which is a continuation of application
(Continued)

(51) **Int. Cl.**
G02B 6/42 (2006.01)
G02B 6/38 (2006.01)

(52) **U.S. Cl.**
CPC ***G02B 6/4292*** (2013.01); ***G02B 6/387*** (2013.01); ***G02B 6/3825*** (2013.01);
(Continued)

(58) **Field of Classification Search**
None
See application file for complete search history.

(56) **References Cited**

U.S. PATENT DOCUMENTS

681,132 A 8/1901 Norton
3,721,945 A 3/1973 Hults
(Continued)

FOREIGN PATENT DOCUMENTS

CA 2495693 A1 4/2004
CA 2495693 A1 4/2004
(Continued)

OTHER PUBLICATIONS

International Search Report and Written Opinion; Application No. PCT/US2018/042202, dated Dec. 7, 2018, pp. 17.
(Continued)

Primary Examiner — Tina M Wong

(57) **ABSTRACT**

An optical connector holding one or more optical ferrule assembly is provided. The optical connector includes an outer body, an inner front body accommodating the one or more optical ferrule assembly, ferrule springs for urging the optical ferrules towards a mating receptacle, and a back body for supporting the ferrule springs. The outer body and the inner front body are configured such that four optical ferrule assembly are accommodated in a small form-factor pluggable (SFP) transceiver footprint or eight optical ferrule assembly are accommodated in a quad small form-factor pluggable (QSFP) transceiver footprint. A receptacle can hold one or more connector inner bodies forming a single boot for all the optical fibers of the inner bodies.

40 Claims, 82 Drawing Sheets

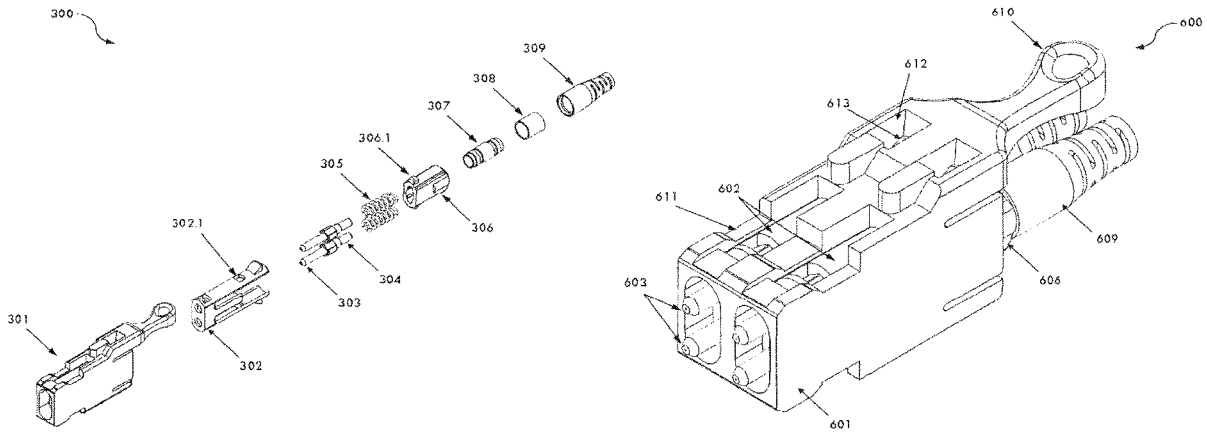

Related U.S. Application Data

No. 17/090,855, filed on Nov. 5, 2020, which is a continuation of application No. 16/414,546, filed on May 16, 2019, now Pat. No. 10,859,778, which is a continuation of application No. 16/388,053, filed on Apr. 18, 2019, now Pat. No. 11,169,338, which is a continuation of application No. 16/035,691, filed on Jul. 15, 2018, now Pat. No. 10,281,668.

(60) Provisional application No. 62/588,276, filed on Nov. 17, 2017, provisional application No. 62/549,655, filed on Aug. 24, 2017, provisional application No. 62/532,710, filed on Jul. 14, 2017.

(52) **U.S. Cl.**
CPC ***G02B 6/3893*** (2013.01); *G02B 6/3873* (2013.01); *G02B 6/3878* (2013.01); *G02B 6/4228* (2013.01)

(56) **References Cited**

U.S. PATENT DOCUMENTS

4,150,790 A 4/1979 Potter
4,240,695 A 12/1980 Evans
4,327,964 A 5/1982 Haesley et al.
4,478,473 A 10/1984 Frear
4,762,388 A 8/1988 Tanaka et al.
4,764,129 A 8/1988 Jones et al.
4,840,451 A 6/1989 Sampson et al.
4,872,736 A 10/1989 Myers et al.
4,979,792 A 12/1990 Weber
5,026,138 A 6/1991 Boudreau
5,031,981 A 7/1991 Peterson
5,011,025 A 8/1991 Haitmanek
5,041,025 A 8/1991 Haitmanek
5,073,045 A 12/1991 Abendschein
D323,143 S 1/1992 Ohkura et al.
5,101,463 A 3/1992 Cubukciyan
5,146,813 A 9/1992 Stanfill, Jr.
5,159,652 A 10/1992 Grassin D'Alphonse
5,212,752 A 5/1993 Stephenson et al.
5,265,181 A 11/1993 Chang
5,289,554 A 2/1994 Cubukciyan et al.
5,315,679 A 5/1994 Baldwin
5,317,663 A 5/1994 Beard et al.
5,321,784 A 6/1994 Cubukciyan et al.
5,335,301 A 8/1994 Newman et al.
5,348,487 A 9/1994 Marazzi et al.
5,418,875 A 5/1995 Nakano
5,444,806 A 8/1995 de Marchi et al.
5,481,634 A 4/1996 Anderson et al.
5,506,922 A 4/1996 Grois et al.
5,521,997 A 5/1996 Rovenolt et al.
5,570,445 A 10/1996 Chou et al.
5,588,079 A 12/1996 Tanabe et al.
5,602,951 A 2/1997 Shiota
5,684,903 A 11/1997 Kyomasu et al.
5,687,268 A 11/1997 Stephenson et al.
5,781,681 A 7/1998 Manning
5,845,036 A 12/1998 De Marchi
5,862,282 A 1/1999 Matsuura
5,915,987 A 6/1999 Reed
5,930,426 A 7/1999 Harting
5,937,130 A 8/1999 Amberg et al.
5,953,473 A 9/1999 Shimotsu
5,956,444 A 9/1999 Duda et al.
5,971,626 A 10/1999 Knodell et al.
6,041,155 A 3/2000 Anderson et al.
6,049,040 A 4/2000 Biles et al.
6,095,862 A 8/2000 Doye
6,134,370 A 10/2000 Childers et al.
6,178,283 B1 1/2001 Weigel
RE37,080 E 3/2001 Stephenson et al.
6,206,577 B1 3/2001 Hall, III et al.
6,206,581 B1 3/2001 Driscoll et al.
6,227,717 B1 5/2001 Ott et al.
6,238,104 B1 5/2001 Yamakawa et al.
6,240,228 B1 5/2001 Chen
6,247,849 B1 6/2001 Liu
6,250,817 B1 6/2001 Lampert et al.
6,276,840 B1 8/2001 Weiss
6,318,903 B1 11/2001 Andrews
6,364,537 B1 4/2002 Maynard
6,379,052 B1 4/2002 de Jong
6,422,759 B1 7/2002 Kevern
6,450,695 B1 9/2002 Matsumoto
6,461,054 B1 10/2002 Iwase
6,471,412 B1 10/2002 Belenkiy et al.
6,478,472 B1 11/2002 Anderson et al.
6,485,194 B1 11/2002 Shirakawa
6,527,450 B1 3/2003 Miyachi
6,530,696 B1 3/2003 Ueda
6,551,117 B2 4/2003 Poplawski et al.
6,565,262 B2 5/2003 Childers
6,572,276 B1 6/2003 Theis
6,579,014 B2 6/2003 Melton et al.
6,585,194 B1 7/2003 Brushwood
6,634,796 B2 10/2003 de Jong
6,634,801 B1 10/2003 Waldron et al.
6,648,520 B2 11/2003 McDonald et al.
6,668,113 B2 12/2003 Togami
6,682,228 B2 1/2004 Ralhnam et al.
6,685,362 B2 2/2004 Burkholder et al.
6,695,486 B1 2/2004 Falkenberg
6,811,321 B1 11/2004 Schmalzigaug et al.
6,817,272 B2 11/2004 Holland
6,854,894 B1 2/2005 Yunker et al.
6,869,227 B2 3/2005 Del Grosso
6,872,039 B2 3/2005 Baus et al.
6,935,789 B2 8/2005 Gross, III et al.
7,036,993 B2 5/2006 Luther
7,052,186 B1 5/2006 Bates
7,077,576 B2 7/2006 Luther
7,090,407 B2 8/2006 Melton et al.
7,091,421 B2 8/2006 Kukita et al.
7,111,990 B2 9/2006 Melton et al.
7,113,679 B2 9/2006 Melton et al.
D533,504 S 12/2006 Lee
D534,124 S 12/2006 Taguchi
7,150,567 B1 12/2006 Luther et al.
7,153,041 B2 12/2006 Mine et al.
7,198,409 B2 4/2007 Smith et al.
7,207,724 B2 4/2007 Gurreri
D543,146 S 5/2007 Chen et al.
7,258,493 B2 8/2007 Milette
7,261,472 B2 8/2007 Suzuki et al.
7,264,402 B2 9/2007 Theuerkorn
7,281,859 B2 10/2007 Mudd et al.
7,284,912 B2 10/2007 Suzuki et al.
D558,675 S 1/2008 Chien et al.
7,315,682 B1 1/2008 En Lin et al.
7,325,976 B2 2/2008 Gurreri et al.
7,325,980 B2 2/2008 Pepe
7,329,137 B2 2/2008 Martin et al.
7,347,634 B2 3/2008 Gunther et al.
7,354,291 B2 4/2008 Caveney et al.
7,331,718 B2 5/2008 Yazaki et al.
7,371,082 B2 5/2008 Zimmel et al.
7,387,447 B2 6/2008 Mudd et al.
7,390,203 B2 6/2008 Murano et al.
D572,661 S 7/2008 En Lin et al.
7,431,604 B2 10/2008 Waters et al.
7,463,803 B2 12/2008 Cody et al.
7,465,180 B2 12/2008 Kusuda et al.
7,473,124 B1 1/2009 Briant
7,510,335 B1 3/2009 Su et al.
7,513,695 B1 4/2009 Lin et al.
7,534,128 B2 5/2009 Caveney et al.
7,540,666 B2 6/2009 Luther
7,561,775 B2 7/2009 Lin et al.
7,588,373 B1 9/2009 Sato
7,591,595 B2 9/2009 Lue et al.
7,594,766 B1 9/2009 Sasser et al.

(56) **References Cited**

U.S. PATENT DOCUMENTS

7,641,398 B2 1/2010 O'Riorden et al.
7,695,199 B2 4/2010 Teo et al.
7,699,533 B2 4/2010 Milette
7,712,970 B1 5/2010 Lee
7,717,625 B2 5/2010 Margolin
7,824,113 B2 11/2010 Wong et al.
7,837,395 B2 11/2010 Lin et al.
D641,708 S 7/2011 Tammauchi
8,083,450 B1 12/2011 Smith et al.
8,152,385 B2 4/2012 de Jong
8,186,890 B2 5/2012 Lu
8,192,091 B2 6/2012 Hsu et al.
8,202,009 B2 6/2012 Lin et al.
8,221,007 B2 7/2012 Peterhans
8,251,733 B2 8/2012 Wu
8,267,595 B2 9/2012 Lin et al.
8,270,796 B2 9/2012 Nhep
8,408,815 B2 4/2013 Lin et al.
8,414,196 B2 4/2013 Lu
8,465,317 B2 6/2013 Gniadek et al.
8,534,928 B2 9/2013 Cooke
8,550,728 B2 10/2013 Takahashi
8,556,645 B2 10/2013 Crain
8,559,781 B2 10/2013 Childers
8,622,634 B2 1/2014 Arnold
8,636,424 B2 1/2014 Kuffel et al.
8,651,749 B2 2/2014 Clovis et al.
8,676,022 B2 3/2014 Jones
8,678,670 B2 3/2014 Takahashi
8,727,638 B2 5/2014 Lee
8,757,894 B2 6/2014 Katoh
8,764,308 B2 7/2014 Irwin
8,770,863 B2 7/2014 Cooke et al.
8,869,661 B2 10/2014 Opstad
9,052,474 B2 6/2015 Jiang
9,063,296 B2 6/2015 Dong
9,250,399 B2 2/2016 Margolin et al.
9,250,402 B2 2/2016 Ishii et al.
9,310,569 B2 4/2016 Lee
9,366,829 B2 6/2016 Czosnowski
9,411,110 B2 8/2016 Barnette, Jr. et al.
9,448,370 B2 9/2016 Xue et al.
9,465,172 B2 10/2016 Shih
9,494,744 B2 11/2016 de Jong
9,548,557 B2 1/2017 Liu
9,551,842 B2 1/2017 Theuerkorn
9,557,495 B2 1/2017 Raven et al.
9,568,686 B2 2/2017 Fewkes et al.
9,581,768 B1 2/2017 Baca et al.
9,599,778 B2 3/2017 Wong et al.
9,658,409 B2 5/2017 Gniadek
9,678,283 B1 6/2017 Chang et al.
9,684,130 B2 6/2017 Veatch et al.
9,684,136 B2 6/2017 Cline et al.
9,684,313 B2 6/2017 Chajec
9,709,753 B1 8/2017 Chang et al.
9,778,425 B2 10/2017 Nguyen
9,829,644 B2 11/2017 Nguyen
9,829,645 B2 11/2017 Good
9,829,653 B1 11/2017 Nishiguchi
9,869,825 B2 1/2018 Bailey et al.
9,880,361 B2 1/2018 Childers
9,946,035 B2 4/2018 Gustafson
9,971,103 B2 5/2018 de Jong et al.
9,989,711 B2 6/2018 Ott et al.
10,031,296 B2 7/2018 Good
10,067,301 B2 9/2018 Murray
10,107,972 B1 10/2018 Gniadek et al.
10,114,180 B2 10/2018 Suzic
10,146,011 B2 12/2018 Nhep
10,281,668 B2 5/2019 Takano et al.
10,281,669 B2 5/2019 Takano et al.
10,859,778 B2 * 12/2020 Takano G02B 6/4292
11,181,701 B2 * 11/2021 Wong G02B 6/3821
2002/0168148 A1 11/2002 Gilliland
2002/0172467 A1 11/2002 Anderson et al.
2002/0191919 A1 12/2002 Nolan
2003/0053787 A1 3/2003 Lee
2003/0063862 A1 4/2003 Fillion
2003/0157825 A1 8/2003 Kane
2004/0052473 A1 3/2004 Seo
2004/0109646 A1 6/2004 Anderson
2004/0161958 A1 6/2004 Togami et al.
2004/0136657 A1 7/2004 Ngo
2004/0141693 A1 7/2004 Szilagvi et al.
2004/0234209 A1 11/2004 Cox et al.
2004/0247252 A1 12/2004 Ehrenreich
2005/0036744 A1 2/2005 Caveney et al.
2005/0111796 A1 5/2005 Matasek et al.
2005/0135755 A1 6/2005 Kiani et al.
2005/0141817 A1 6/2005 Yazaki et al.
2006/0013539 A1 1/2006 Thaler
2006/0076061 A1 4/2006 Bush
2006/0089049 A1 4/2006 Sedor
2006/0127025 A1 6/2006 Haberman
2006/0153503 A1 7/2006 Suzuki
2006/0160429 A1 7/2006 Dawiedczyk et al.
2006/0193562 A1 8/2006 Theuerkorn
2006/0269194 A1 11/2006 Luther et al.
2006/0274411 A1 12/2006 Yamauchi
2007/0025665 A1 2/2007 Dean
2007/0028409 A1 2/2007 Yamada
2007/0079854 A1 4/2007 You
2007/0098329 A1 6/2007 Shimoji et al.
2007/0149028 A1 6/2007 Yu et al.
2007/0149062 A1 6/2007 Long et al.
2007/0230874 A1 10/2007 Lin
2007/0232115 A1 10/2007 Burke et al.
2007/0243749 A1 10/2007 Wu
2008/0008430 A1 1/2008 Kewitsch
2008/0013896 A1 1/2008 Salzberg et al.
2008/0044137 A1 2/2008 Luther et al.
2008/0056647 A1 3/2008 Margolin et al.
2008/0064334 A1 3/2008 Hamadi
2008/0069501 A1 3/2008 Mudd et al.
2008/0101757 A1 5/2008 Lin et al.
2008/0226237 A1 9/2008 O'Rioreden et al.
2008/0267566 A1 10/2008 En Lin
2009/0028507 A1 1/2009 Jones et al.
2009/0047818 A1 2/2009 Irwin et al.
2009/0092360 A1 4/2009 Lin et al.
2009/0176401 A1 7/2009 Gu
2009/0196555 A1 8/2009 Lin et al.
2009/0214162 A1 8/2009 O'Riorden et al.
2009/0220197 A1 9/2009 Gniadek
2009/0220200 A1 9/2009 Wong et al.
2009/0222457 A1 9/2009 Gallant
2009/0290839 A1 11/2009 En Lin
2009/0290938 A1 11/2009 Asaoka
2010/0034502 A1 2/2010 Lu et al.
2010/0054668 A1 3/2010 Nelson
2010/0061069 A1 3/2010 Cole
2010/0092136 A1 4/2010 Nhep
2010/0220961 A1 9/2010 de Jong et al.
2010/0247041 A1 9/2010 Szilagyi
2010/0284656 A1 11/2010 Morra
2010/0322561 A1 12/2010 Lin et al.
2011/0044588 A1 2/2011 Larson et al.
2011/0058773 A1 3/2011 Peterhans
2011/0131801 A1 6/2011 Nelson et al.
2011/0155810 A1 6/2011 Taniguichi
2011/0177710 A1 7/2011 Tobey
2011/0239220 A1 9/2011 Gibson
2012/0099822 A1 4/2012 Kuffel et al.
2012/0155810 A1 6/2012 Nakagawa
2012/0189260 A1 7/2012 Kowalczyk et al.
2012/0237177 A1 9/2012 Minota
2012/0269485 A1 10/2012 Haley et al.
2012/0301080 A1 11/2012 Gniadek
2012/0308183 A1 12/2012 Irwin
2012/0328248 A1 12/2012 Larson
2013/0019423 A1 1/2013 Srutkowski
2013/0071067 A1 3/2013 Lin
2013/0089995 A1 4/2013 Gniadek et al.

(56) **References Cited**

U.S. PATENT DOCUMENTS

2013/0094816	A1	4/2013	Lin et al.	
2013/0101258	A1	4/2013	Hikosaka	
2013/0121653	A1	5/2013	Shitama et al.	
2013/0170797	A1	7/2013	Ott	
2013/0183012	A1	7/2013	Lopez et al.	
2013/0216185	A1	8/2013	Klavuhn	
2013/0259429	A1	10/2013	Czosnowski et al.	
2013/0308915	A1	11/2013	Buff	
2013/0322825	A1*	12/2013	Cooke	G02B 6/3831 385/59
2014/0016901	A1	1/2014	Lambourn et al.	
2014/0023322	A1	1/2014	Gniadek	
2014/0050446	A1	2/2014	Chang	
2014/0056562	A1	2/2014	Limbert	
2014/0133808	A1	5/2014	Hill et al.	
2014/0169727	A1	6/2014	Veatch et al.	
2014/0219621	A1	8/2014	Barnette, Jr. et al.	
2014/0226946	A1	8/2014	Cooke et al.	
2014/0241644	A1	8/2014	Kang	
2014/0241678	A1	8/2014	Bringuier et al.	
2014/0241688	A1	8/2014	Isenhour et al.	
2014/0334780	A1	11/2014	Nguyen et al.	
2014/0348477	A1	11/2014	Chang	
2015/0003788	A1	1/2015	Chen	
2015/0111417	A1	4/2015	Vanderwoud	
2015/0177463	A1	6/2015	Lee	
2015/0198766	A1	7/2015	Takahashi	
2015/0212282	A1	7/2015	Lin	
2015/0241644	A1	8/2015	Lee	
2015/0301294	A1	10/2015	Chang et al.	
2015/0331201	A1	11/2015	Takano et al.	
2015/0355417	A1	12/2015	Takano et al.	
2015/0370021	A1	12/2015	Chan	
2015/0378113	A1	12/2015	Good et al.	
2016/0131849	A1	5/2016	Takano et al.	
2016/0139343	A1	5/2016	Dean, Jr. et al.	
2016/0161681	A1	6/2016	Banal, Jr. et al.	
2016/0172852	A1	6/2016	Tamura	
2016/0178852	A1	6/2016	Takano	
2016/0195682	A1	6/2016	Takano	
2016/0291262	A1	6/2016	Chang et al.	
2016/0231512	A1	8/2016	Seki	
2016/0259135	A1	9/2016	Gniadek et al.	
2016/0266326	A1	9/2016	Gniadek	
2016/0320572	A1	11/2016	Gniadek	
2016/0349458	A1	12/2016	Murray	
2016/0370545	A1	12/2016	Jiang	
2017/0003458	A1	1/2017	Gniadek	
2017/0205587	A1	7/2017	Chang et al.	
2017/0205590	A1	7/2017	Bailey	
2017/0205591	A1	7/2017	Takano et al.	
2017/0212313	A1	7/2017	Elenabaas	
2017/0212316	A1	7/2017	Takano	
2017/0254961	A1	9/2017	Kamada et al.	
2017/0276275	A1	9/2017	Beemer et al.	
2017/0276887	A1	9/2017	Allen	
2017/0277059	A1	9/2017	Miura et al.	
2017/0343740	A1*	11/2017	Nguyen	G02B 6/4246
2018/0128988	A1	5/2018	Chang	
2018/0156988	A1	6/2018	Gniadek	
2018/0172923	A1	6/2018	Bauco	
2018/0252872	A1	9/2018	Chen	
2018/0341069	A1	11/2018	Takano	
2019/0064447	A1	2/2019	Chang et al.	
2019/0204513	A1	7/2019	Davidson et al.	

FOREIGN PATENT DOCUMENTS

CN	2836038	Y	11/2006
CN	2836038	Y	11/2006
CN	201383588	Y	1/2010
CN	201383588	Y	1/2010
CN	2026500189	U	12/2013
CN	106997078		8/2017
DE	19507669	A1	9/1996
DE	202006011910	U1	3/2007
DE	102006019335	U1	10/2007
EP	1074868	A1	2/2001
EP	1074868	A1	7/2001
EP	1211537	A2	6/2002
EP	1211537	A3	6/2002
EP	1245980	A1	10/2002
EP	1566674	A2	8/2005
GB	2111240	A	6/1983
JP	2000089059	A	3/2000
JP	03752331	B2	3/2006
JP	2009229545	A	10/2009
JP	2009276493	A	11/2009
JP	04377820	B2	12/2009
JP	2011027876	A	2/2011
JP	2012053375	A	3/2012
KR	20040028409	A	4/2006
KR	2009005382	A	1/2009
KR	200905382	U	6/2009
KR	1371686	B1	3/2014
TW	200821653	A	5/2008
WO	200179904	A2	10/2001
WO	WO2001079904	A2	10/2001
WO	2004027485	A1	4/2004
WO	WO2006007120	A1	1/2006
WO	2008112986	A1	9/2008
WO	2009135787	A1	11/2009
WO	2010024851	A2	3/2010
WO	2012136702	A1	10/2012
WO	2012162385	A1	11/2012
WO	WO2012162385	A1	11/2012
WO	2014028527	A1	2/2014
WO	2014182351	A1	11/2014
WO	WO2015103783	A1	7/2015
WO	2015191024	A1	12/2015
WO	2016019993	A1	2/2016
WO	2016148741	A1	9/2016
WO	WO2019126333	A1	6/2019

OTHER PUBLICATIONS

International Search Report and Written Opinion, Application No. PCT/US2019/013861, dated Apr. 8, 2019, pp. 15.
Fiber Optic Connectors Tutorial, 2018, pp. 20.
Fiber Optic Glossary, Feb. 29, 2016, pp. 93.
"Fiber Optic Interconnect Solutions, Tactical Fiber Optical Connectors, Cables and Termini" 2006, Glenair, Inc., Glendale, California, www.mps-electronics.de, pp. 232.
"Fiber Optic Products Catalog" Nov. 2007, Tyco Electronics Corporation, Harrisburg, Pennsylvania, www.ampnetconnect.com, pp. 204.
"Fiber Optic Connectors and Assemblies Catalog" 2009, Huber & Suhner Fiver Optics, Herisau, Switzerland, www.hubersuhner.com, pp. 104.
PCT/US2018/062406 International Search Report dated Mar. 18, 2019.
PCT/US2018/062406 The written Opinion dated Mar. 18, 2019.
PCT/US2018/062405 International Search Report dated Apr. 3, 2019.
PCT/US2018/062405 The written Opinion dated Apr. 3, 2019.
PCT/IB2018/056133 Written Opinion dated Jan. 3, 2019.
PCY/IB/056133 Search Report dated Jan. 3, 2019.
Final Office Action, U.S. Appl. No. 16/035,691, dated Feb. 11, 2019, pp. 8.
Non-Final Office Action, U.S. Appl. No. 16/035,695, dated Sep. 28, 2018, pp. 7.
International Search Report and Written Opinion, Application No. PCT/US/2018/042202, pp. 17, dated Dec. 7, 2018.
International Search Report and Written Opinion, Application No. PCT/US19/24718, dated Jun. 26, 2019, pp. 7.
ISR for PCT/US2019/013861, dated Apr. 8, 2019, 3 pages.
WO for PCT/US2019/013861, dated Apr. 8, 2019, 11 pages.
International Search Report and Written Opinion for Application No. PCT/US2018/62406 dated Mar. 18, 2019, 12, pages, United States.

(56) **References Cited**

OTHER PUBLICATIONS

International Search Report and Written Opinion for Application No. PCT/US2019/40700 dated Sep. 27, 2019, 12, pages, United States.
International Search Report and Written Opinion for Application No. PCT/US2019/50895 dated Jan. 6, 2020, 12, pages, United States.
International Search Report and Written Opinion for Application No. PCT/US2019/50909 dated Dec. 17, 2019, 11, pages, United States.
International Search Report and Written Opinion for Application No. PCT/US2019/56564 dated Jan. 14, 2020, 14, pages, United States.
International Search Report and Written Opinion, Application No. PCT/US19/46397, dated Nov. 12, 2019, pp. 6.
International Search Report; PCT/US2018/042202 filed Jul. 16, 2018; Applicant: Senko Advanced Components, Inc.
International Preliminary Report on Patentability for PCT/US2019/022940 dated Oct. 1, 2020, 11 pages.
Extended European Search Report and Written Opinion, Application No. 18832246.5, dated Mar. 15, 2021, pp. 6.

* cited by examiner

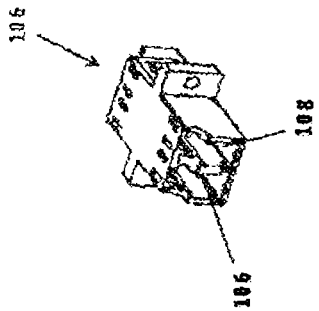

FIG. 1B
(Prior Art)

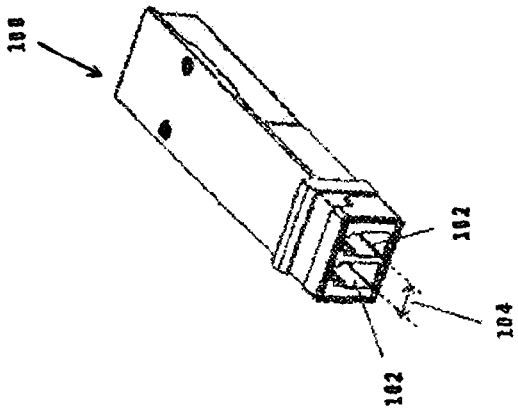

FIG. 1A
(Prior Art)

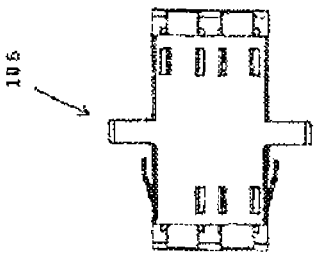

FIG. 1C
(Prior Art)

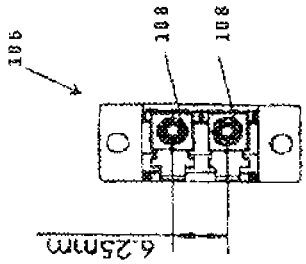

FIG. 1D
(Prior Art)

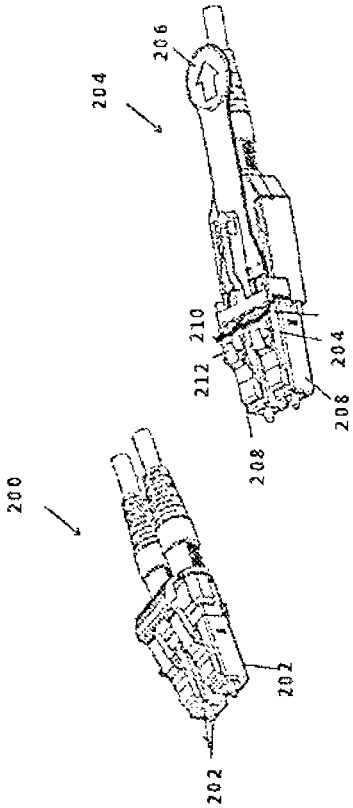

FIG. 2A
(Prior Art)

FIG. 2B
(Prior Art)

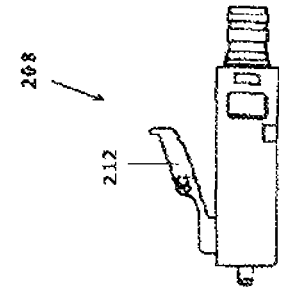

FIG. 2D
(Prior Art)

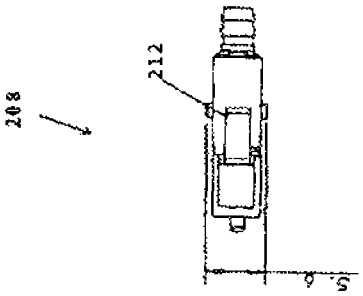

FIG. 2C
(Prior Art)

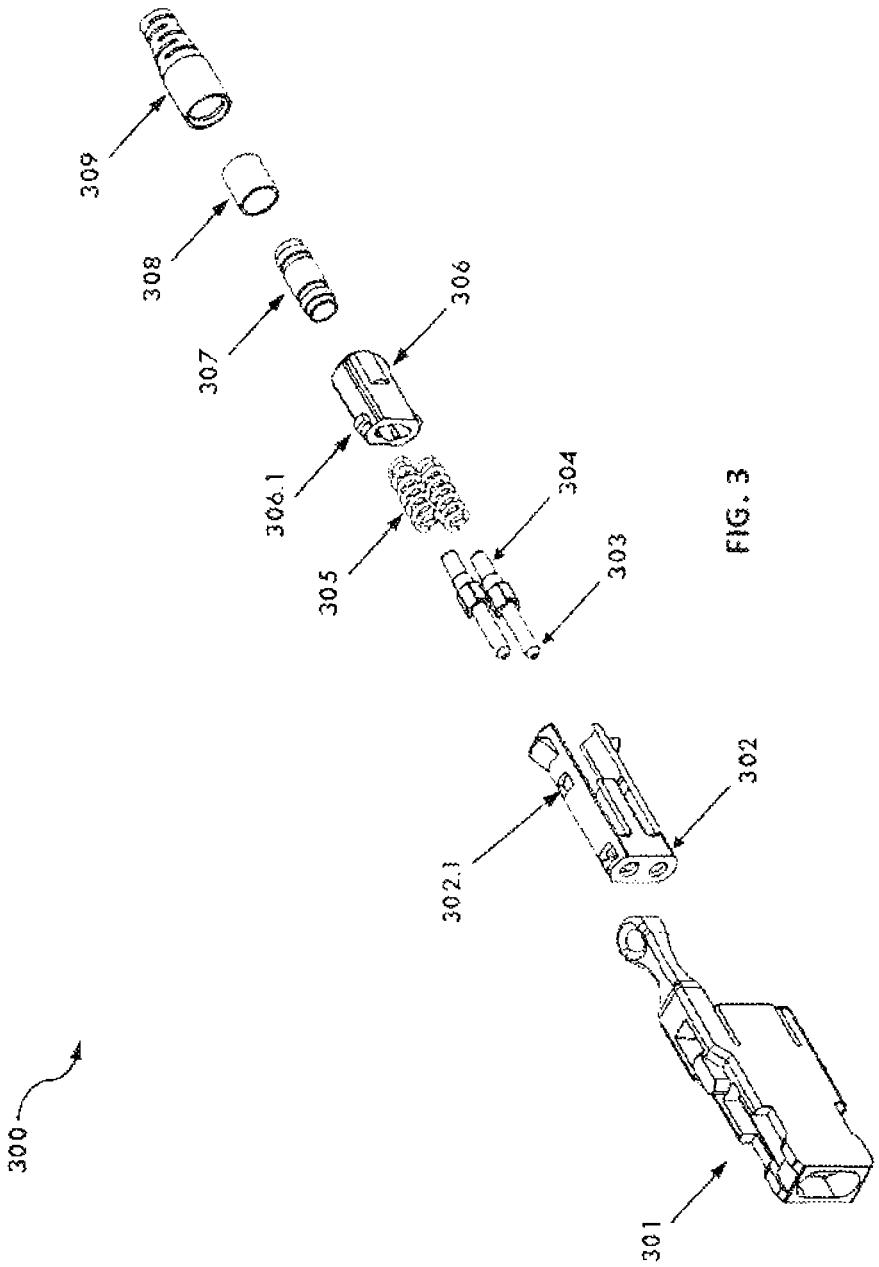

FIG. 3

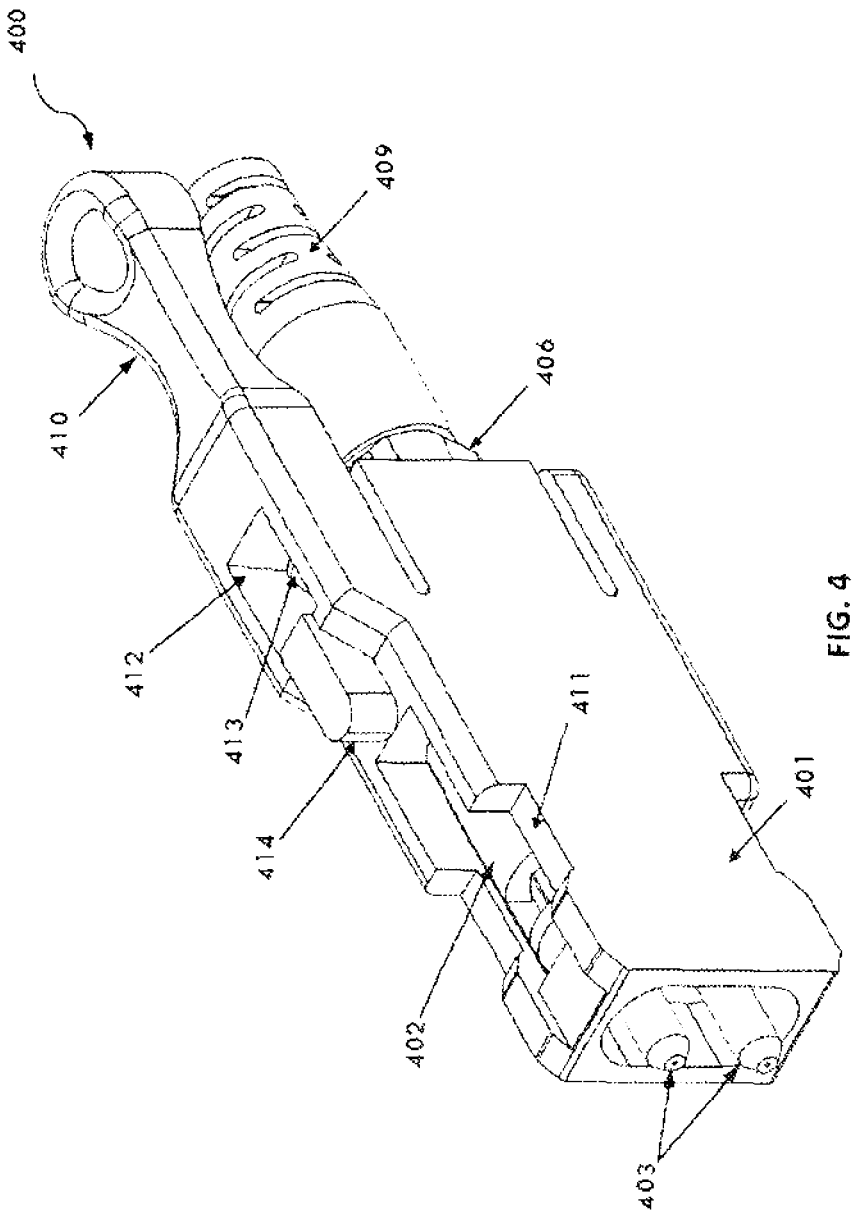

FIG. 4

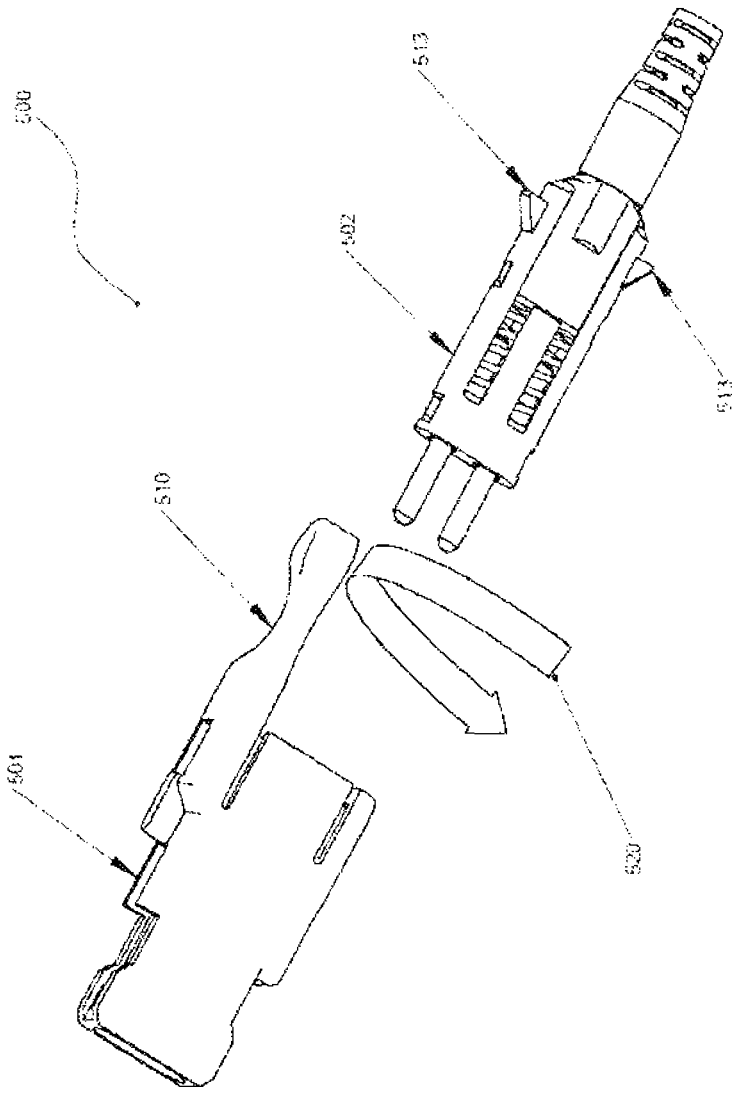

FIG. 5

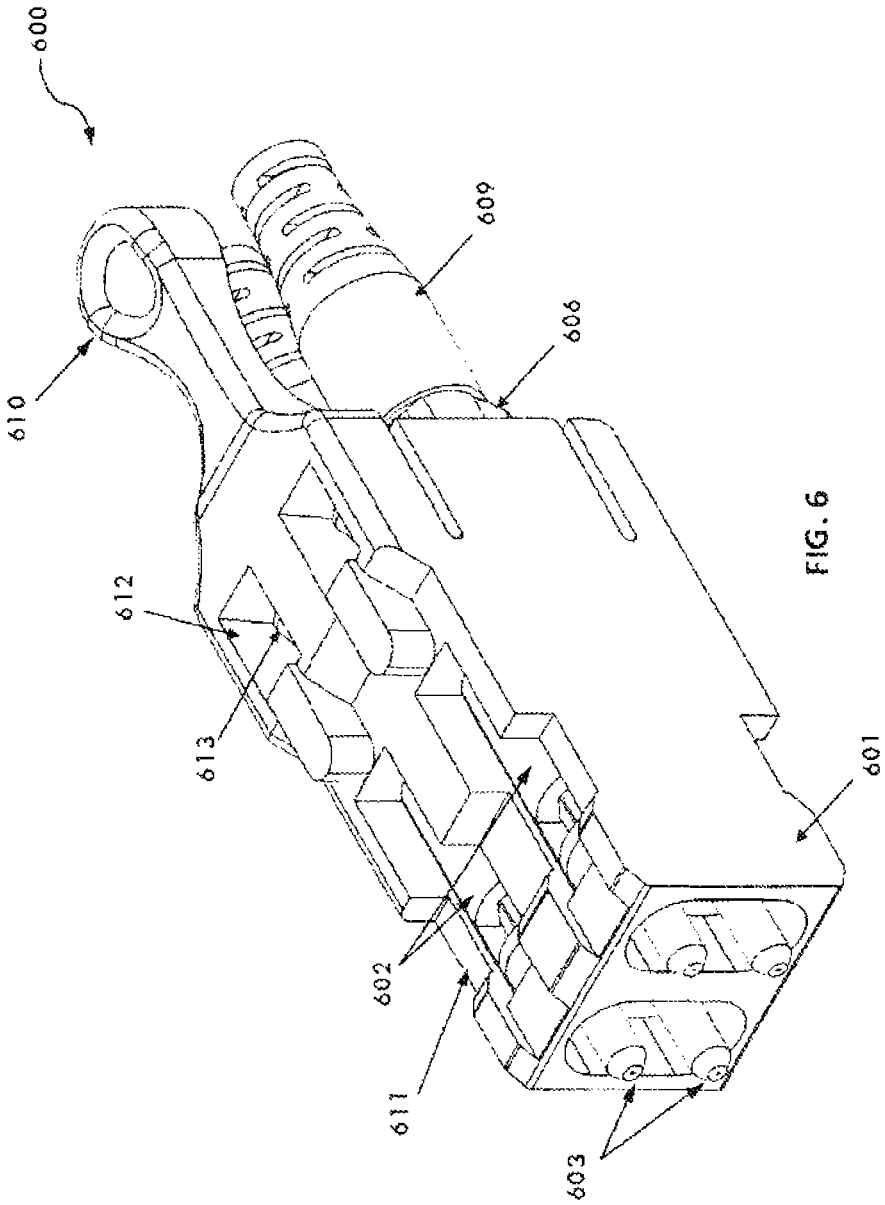

FIG. 6

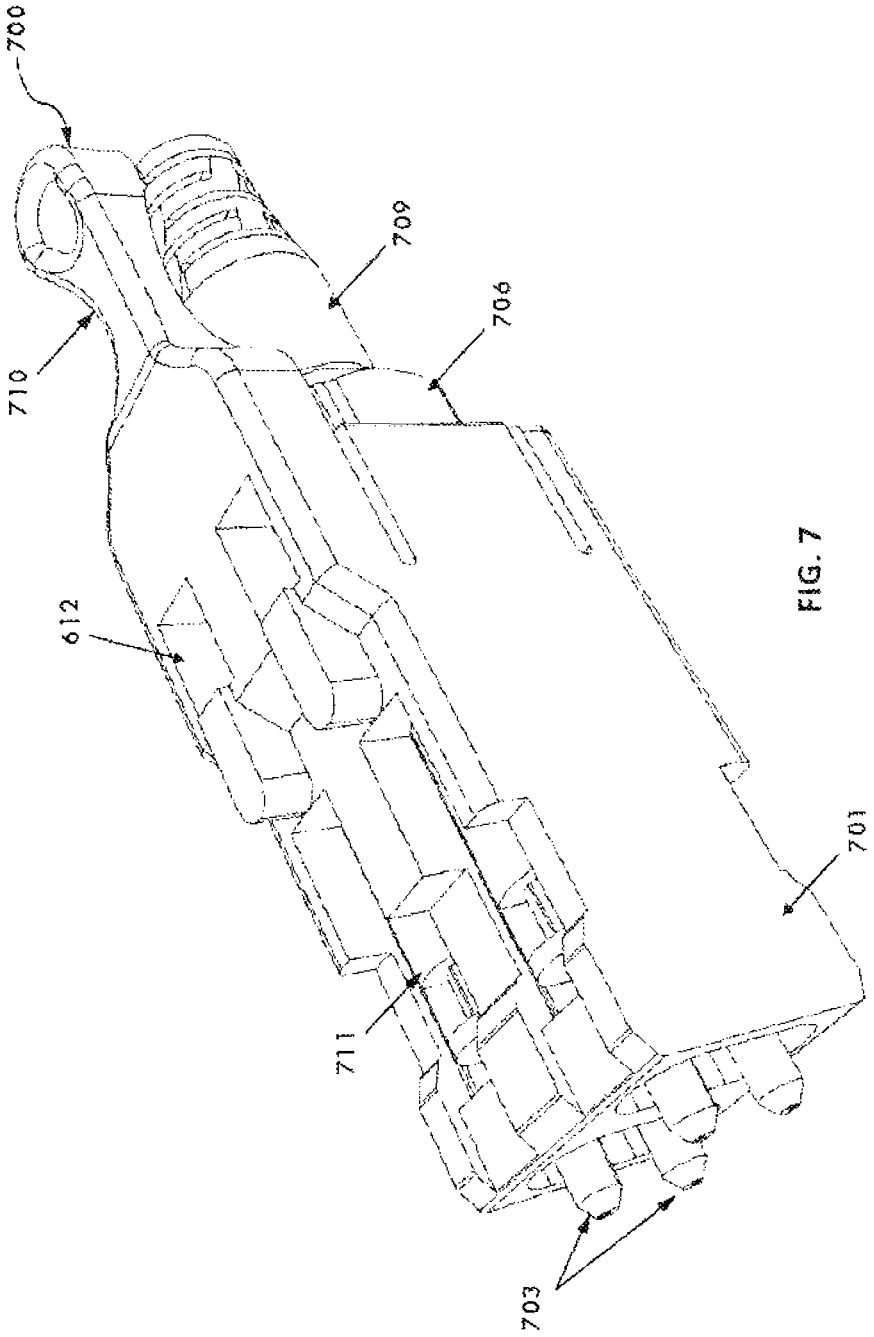

FIG. 7

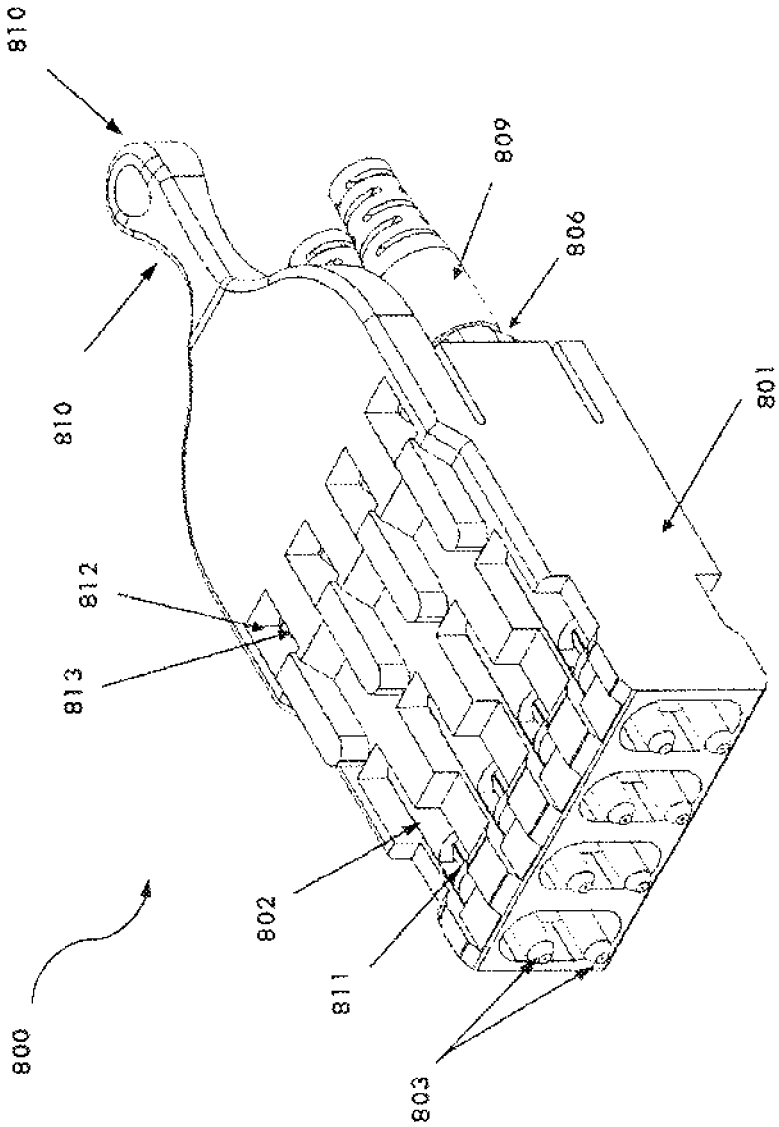

FIG. 8

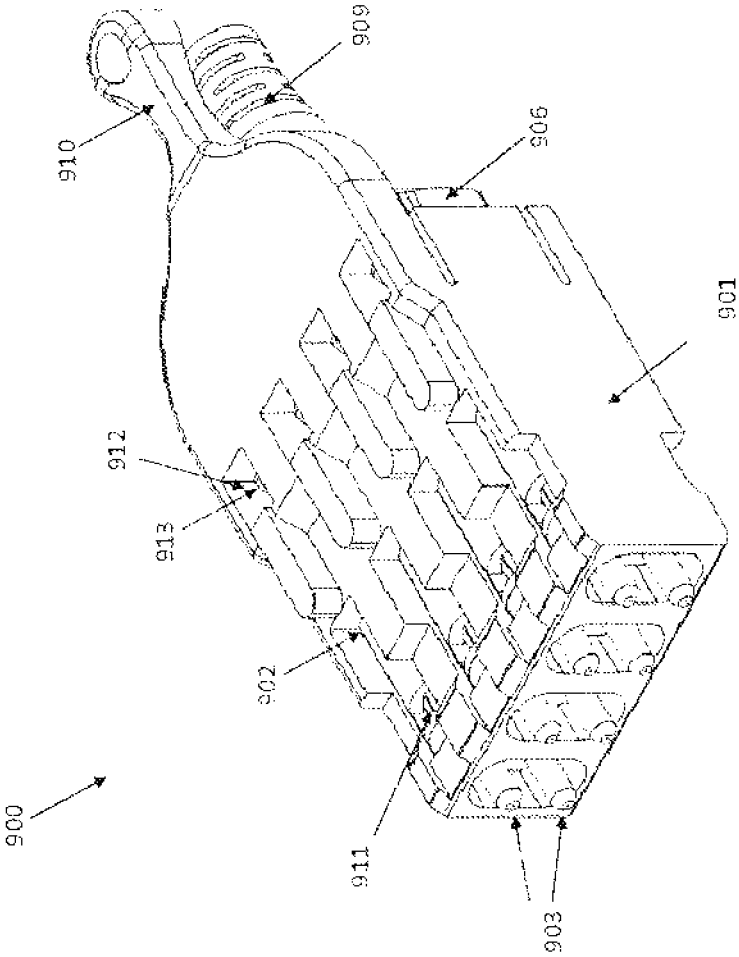

FIG. 9

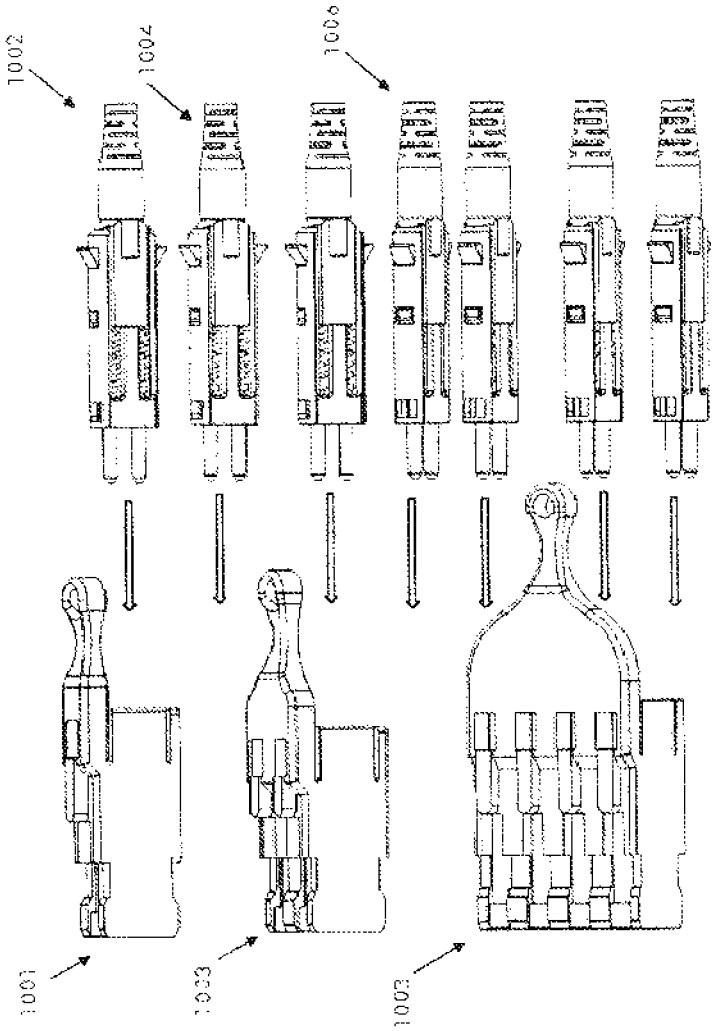

FIG. 10

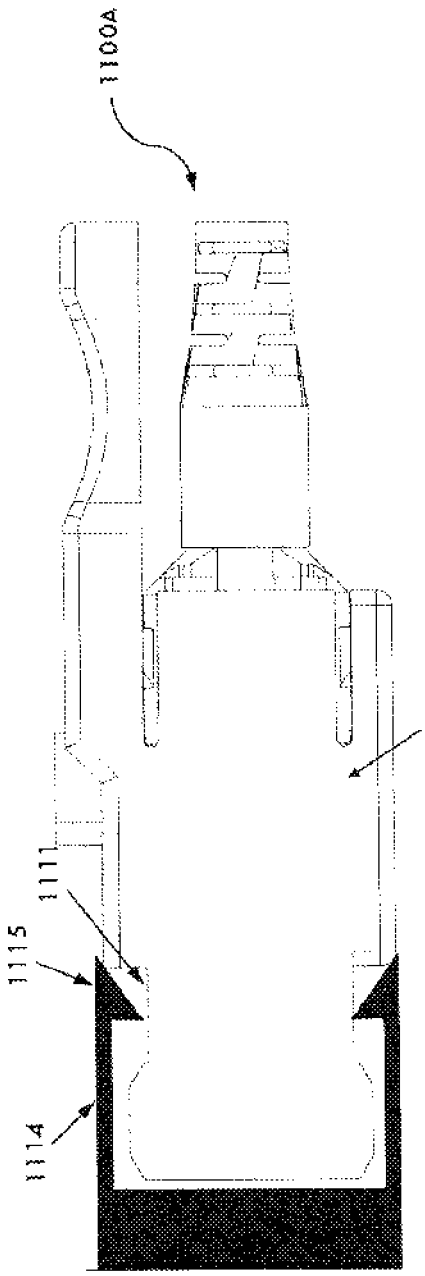

FIG. 11A

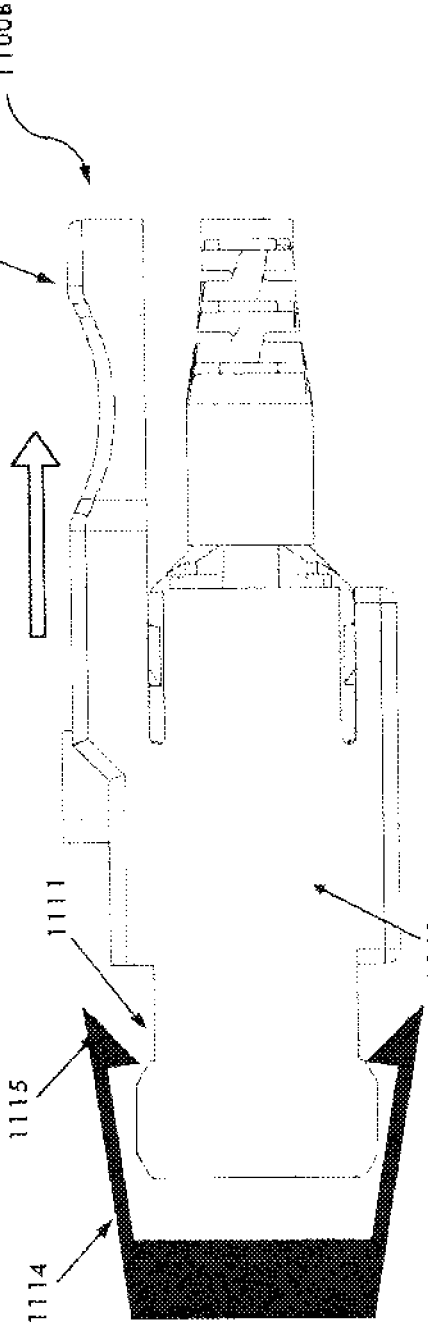

FIG. 11B

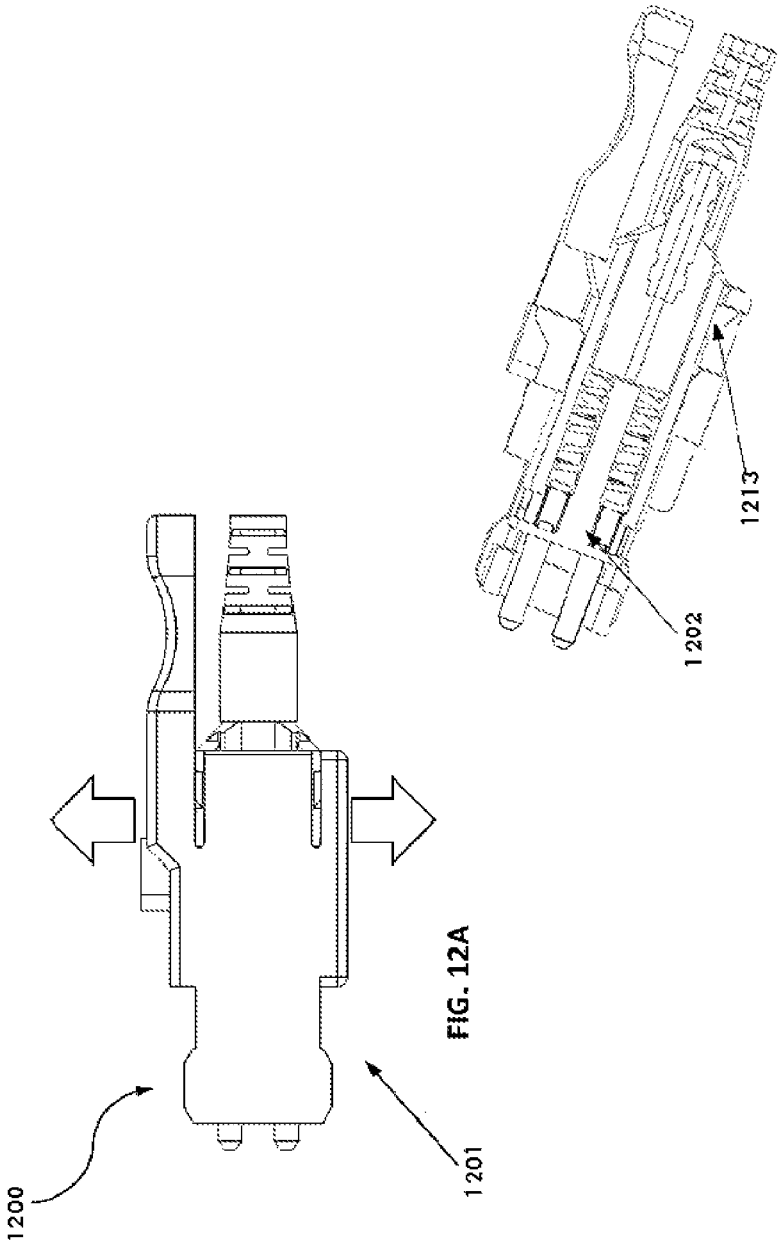

FIG. 12A

FIG. 12B

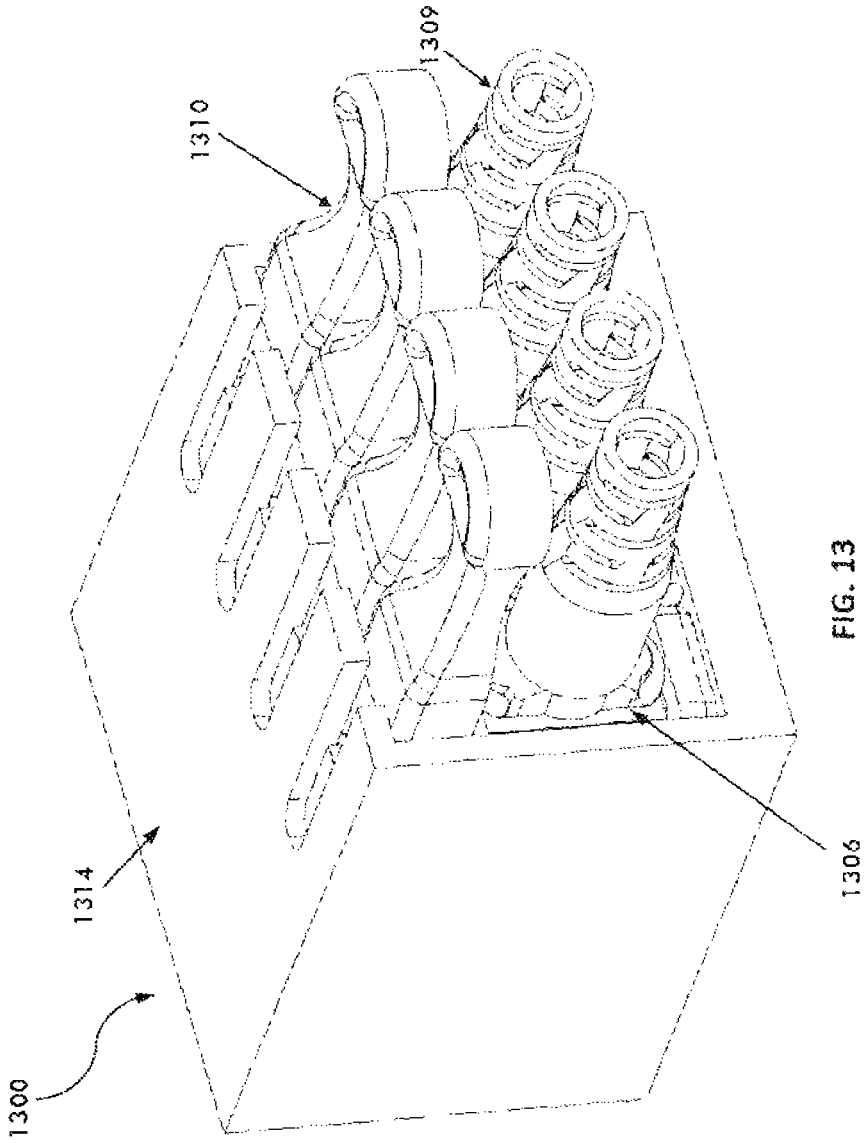

FIG. 13

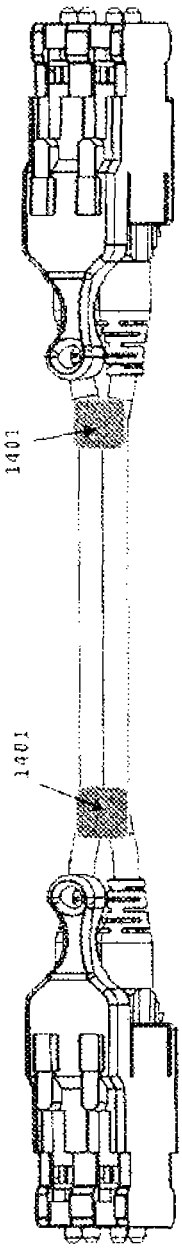

FIG. 14A

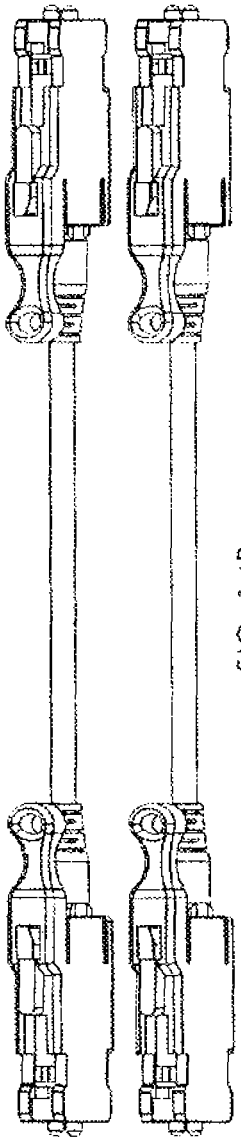

FIG. 14B

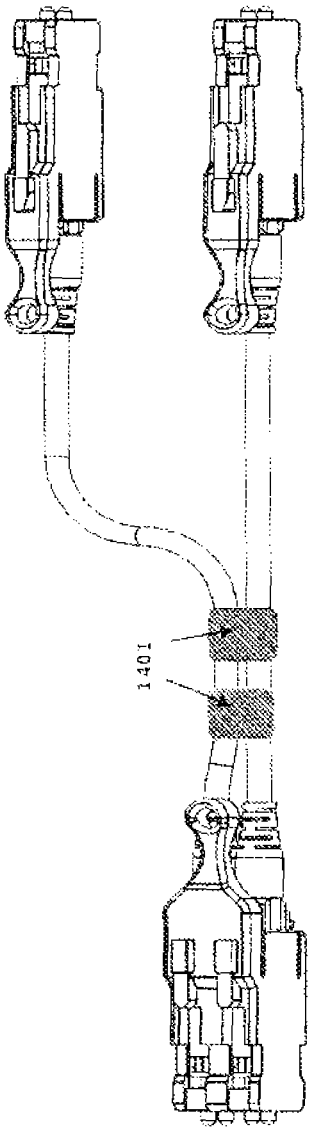

FIG. 14C

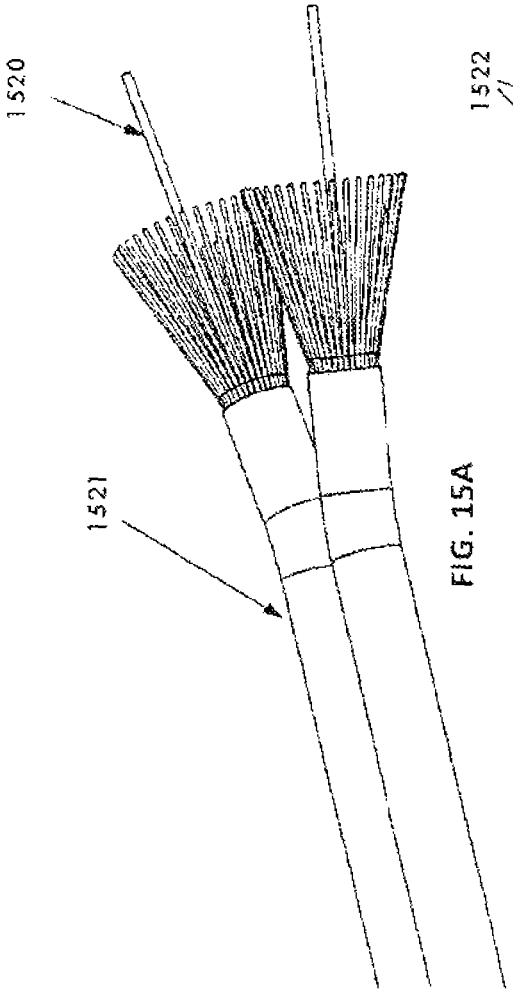

FIG. 15A

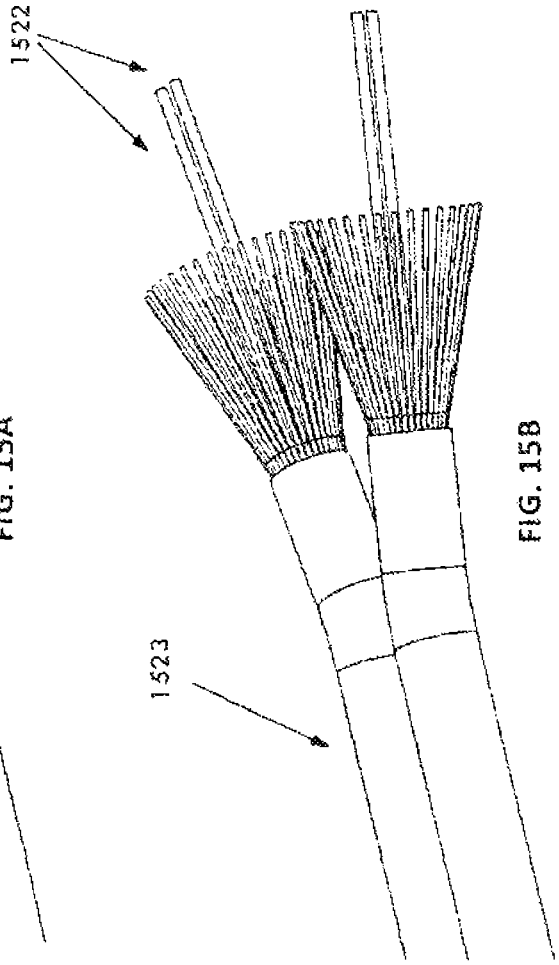

FIG. 15B

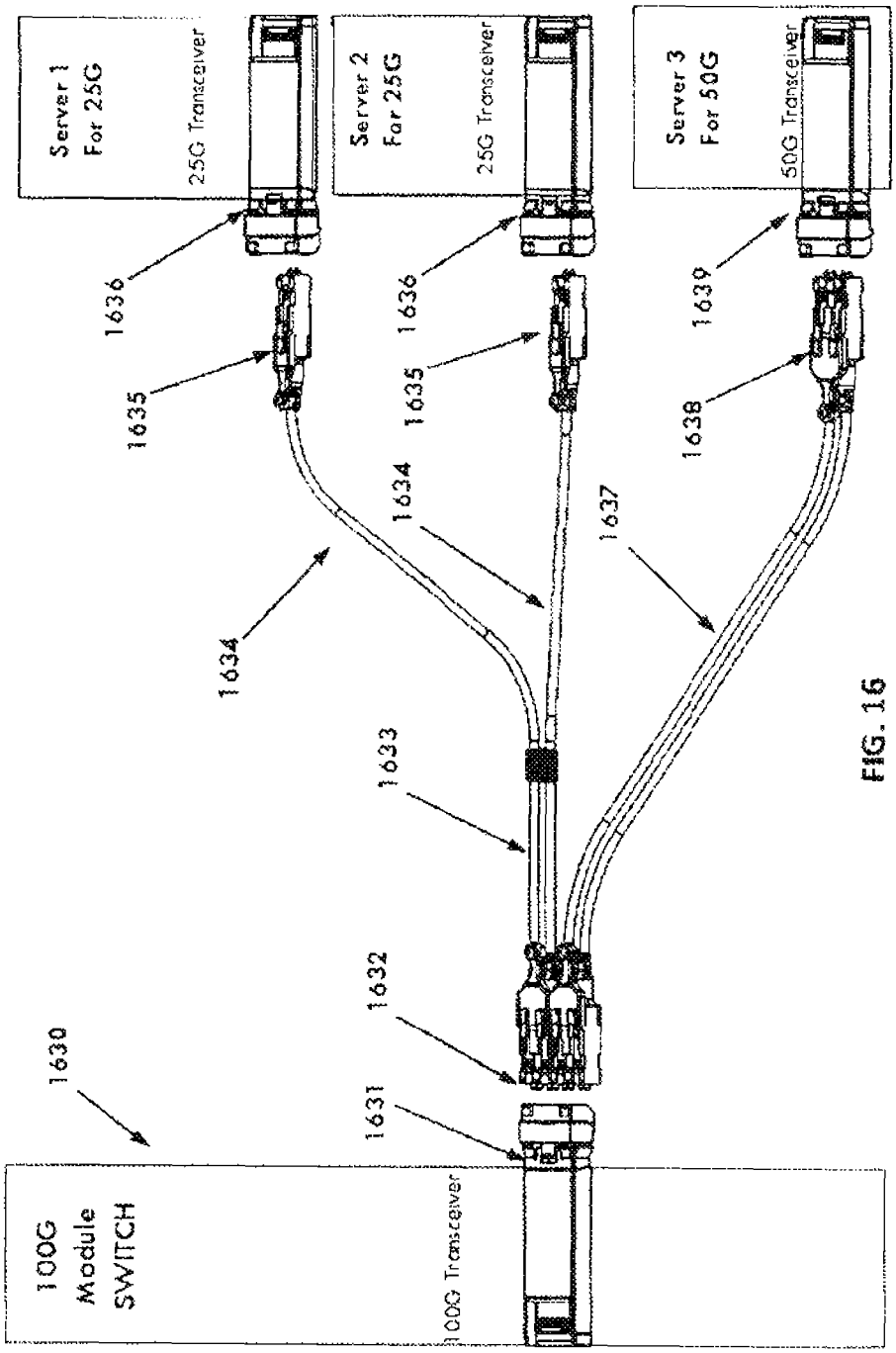
Server 1
For 25G
25G Transceiver
Server 2
For 25G
25G Transceiver
Server 3
For 50G
50G Transceiver
1636
1636
1639
1635
1635
1638
1634
1634
1637
1633
1632
1630
1631
100G
Module
SWITCH
100G Transceiver

FIG. 16

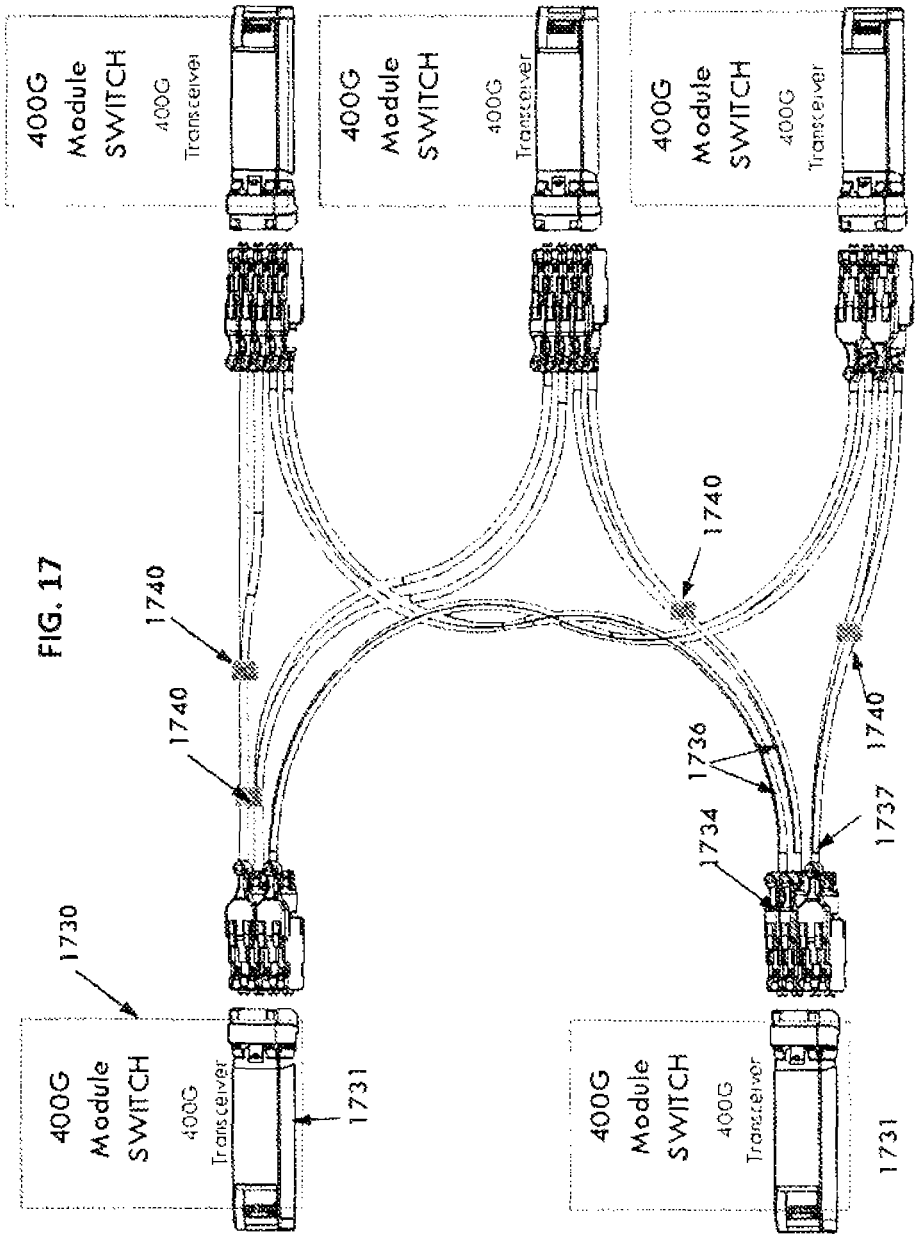
400G
Module
SWITCH
400G
Transceiver
1730
1731
1740
1736
1734
1737

FIG. 17

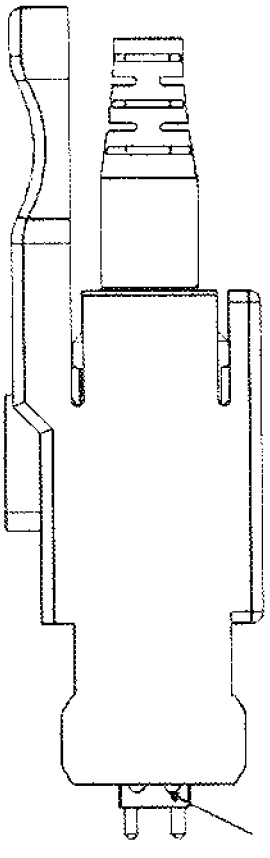

FIG. 18A

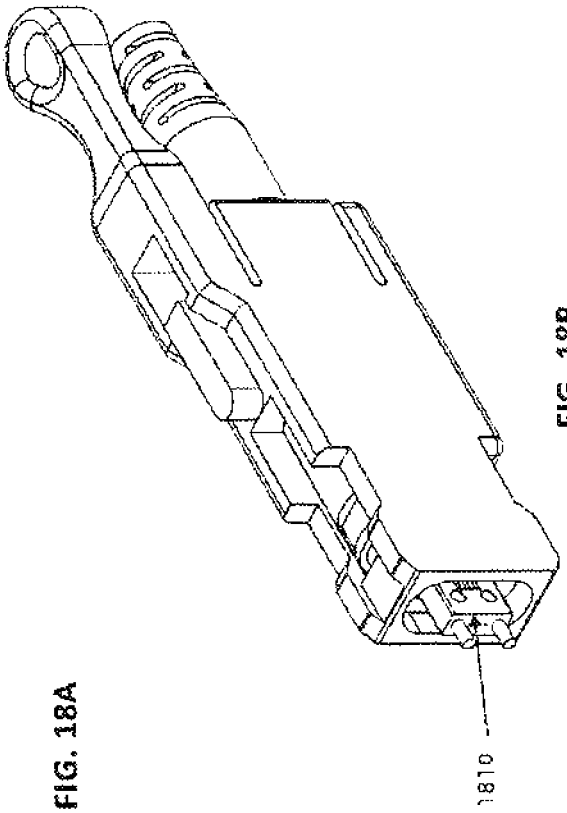

FIG. 18B

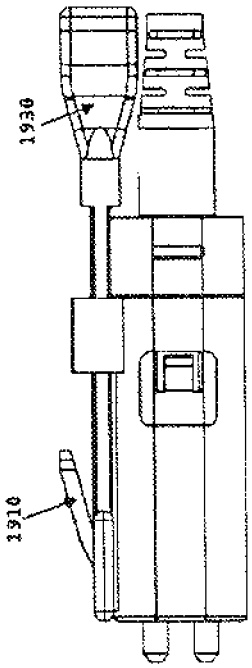

FIG. 19A

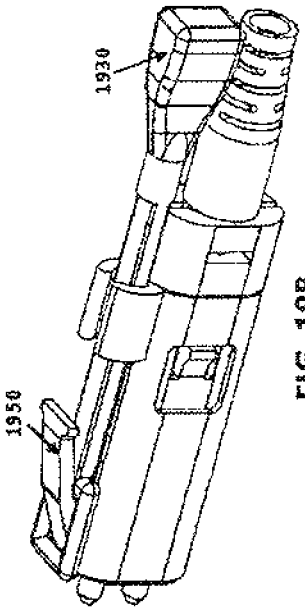

FIG. 19B

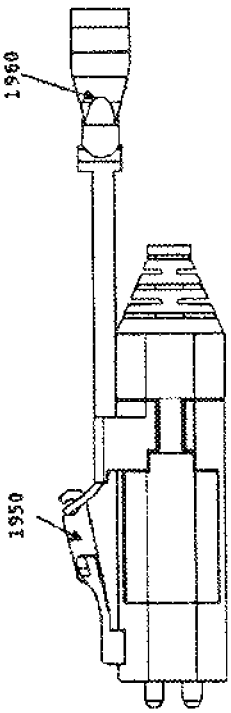

FIG. 19C

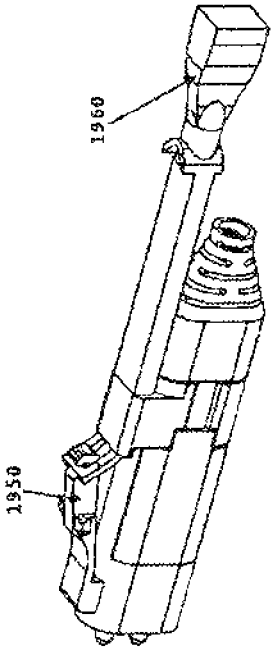

FIG. 19D

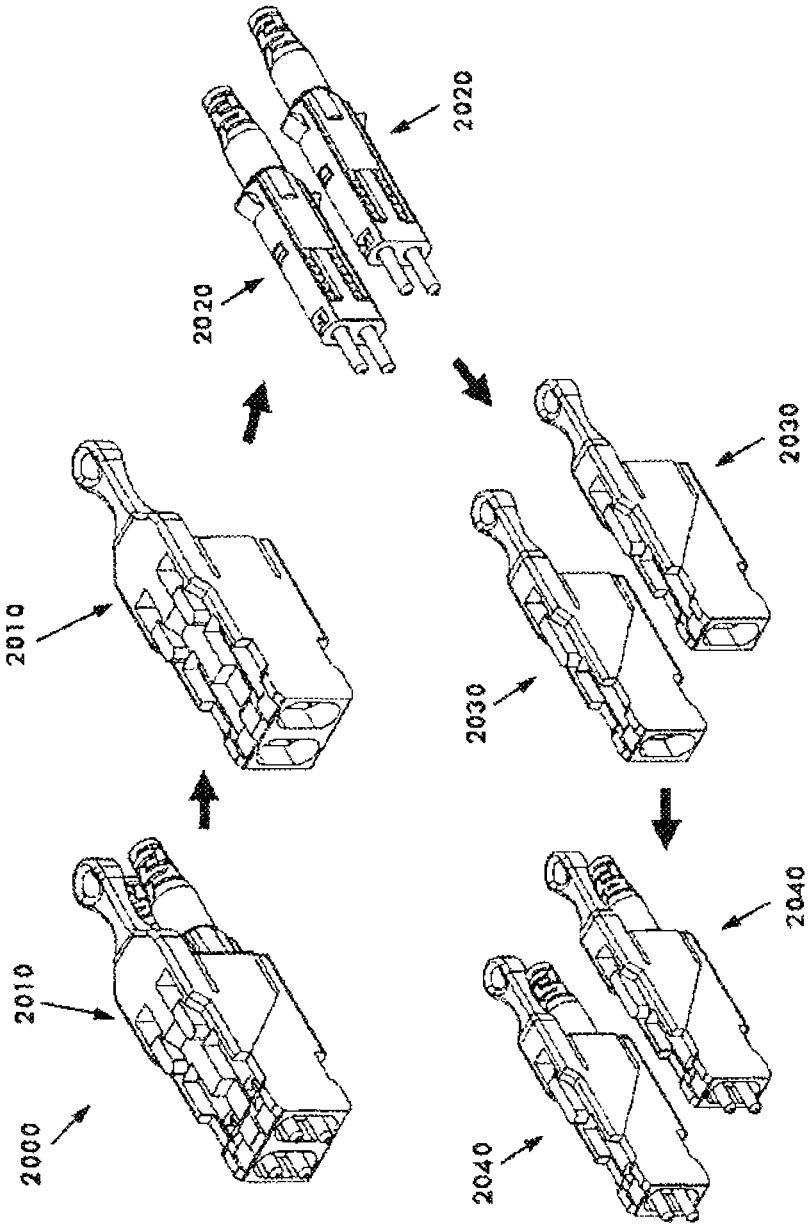

FIG. 20

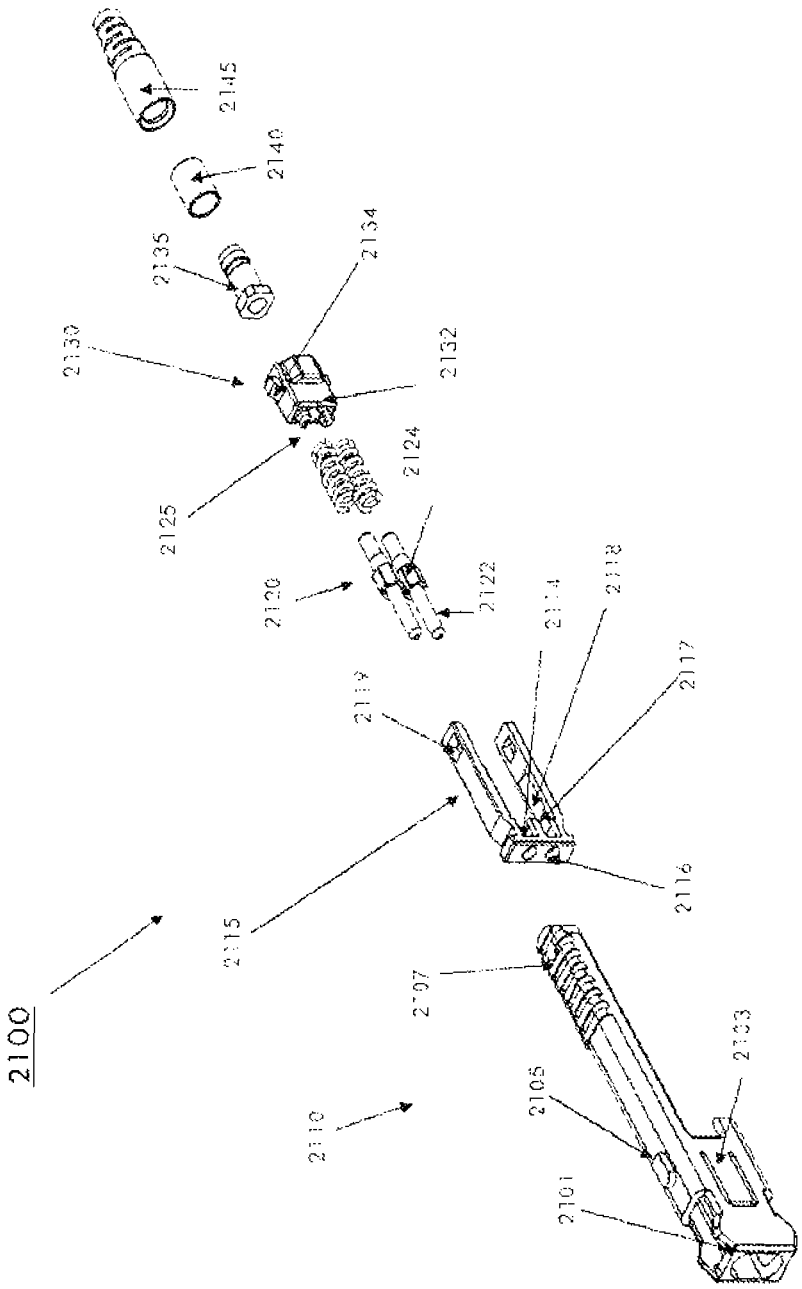
2100
2145
2140
2135
2130
2134
2132
2125
2124
2120
2122
2119
2114
2118
2117
2115
2116
2107
2110
2105
2103
2101

FIG. 21A

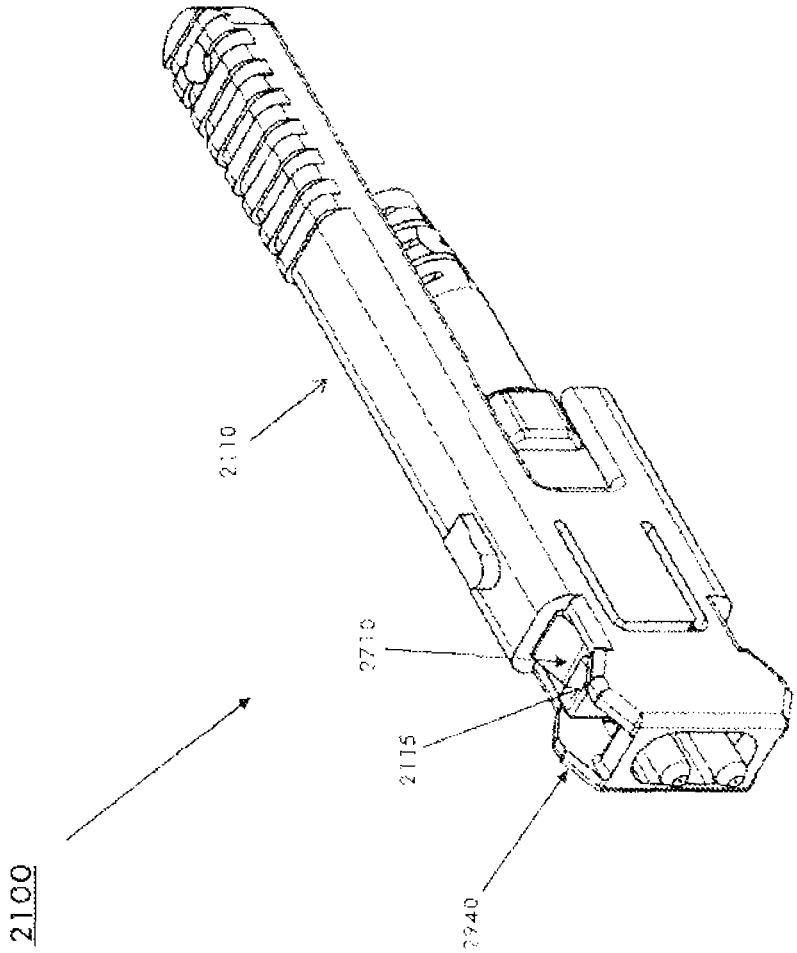

FIG. 21B

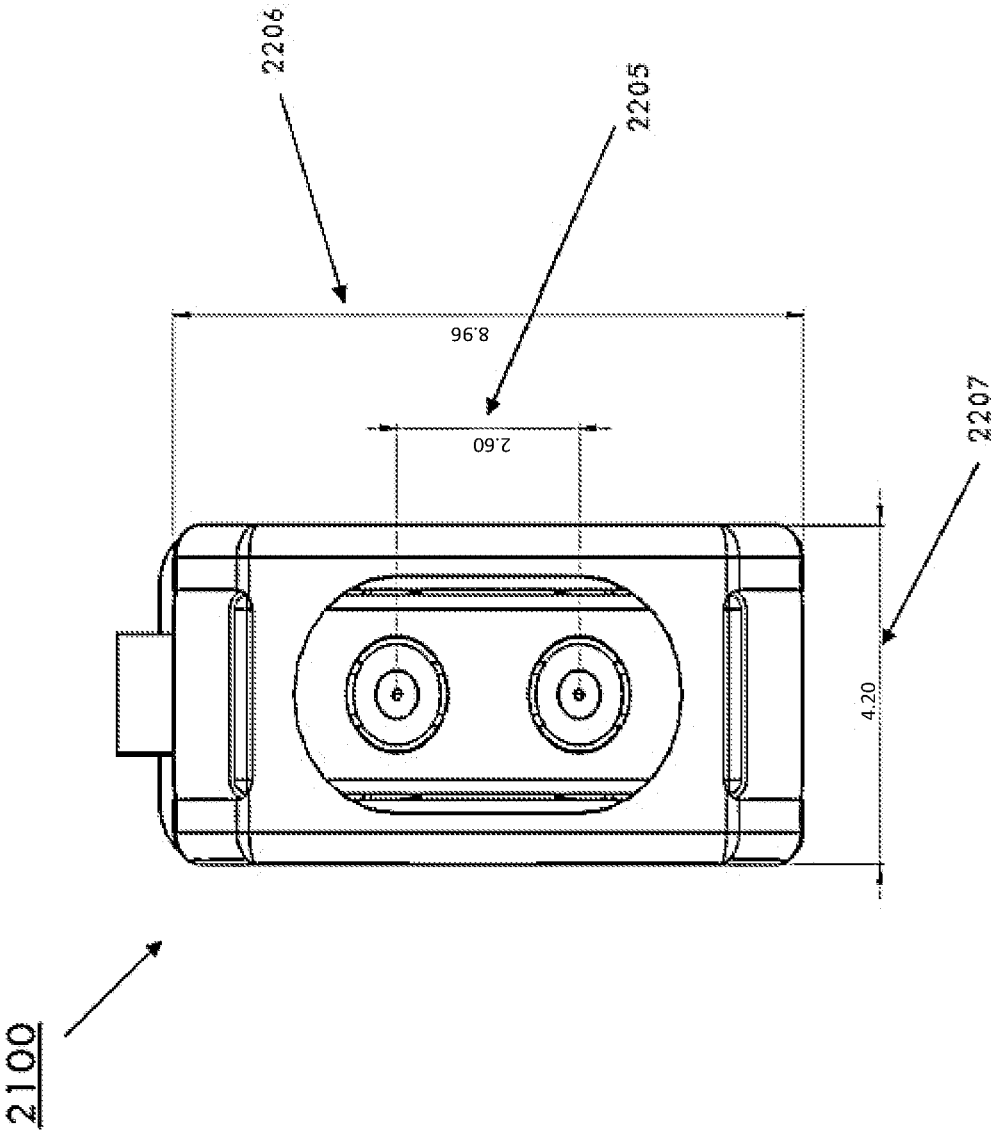

FIG. 22

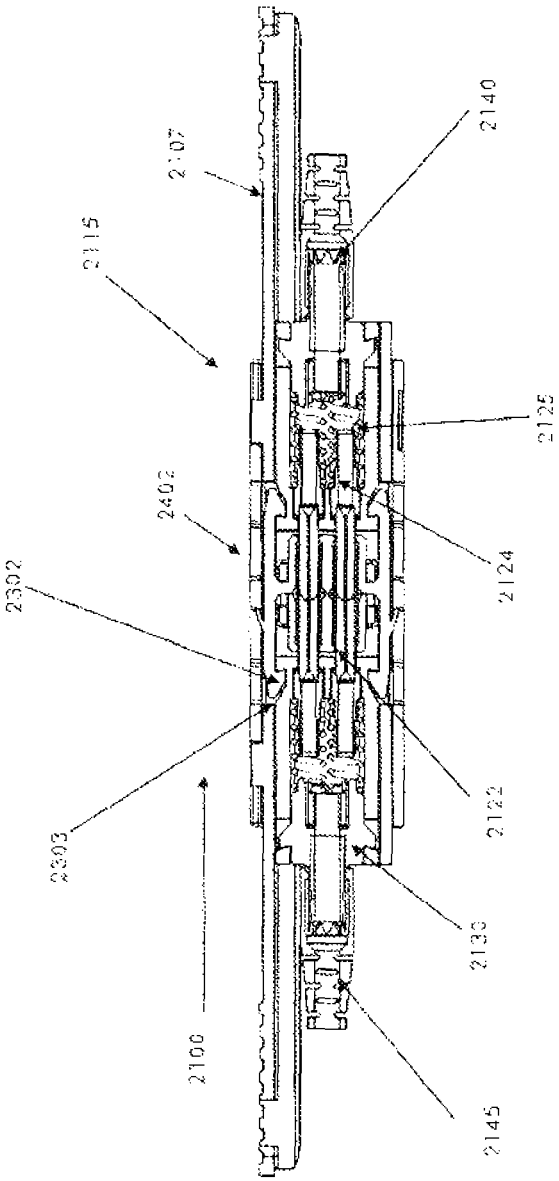

FIG. 23A

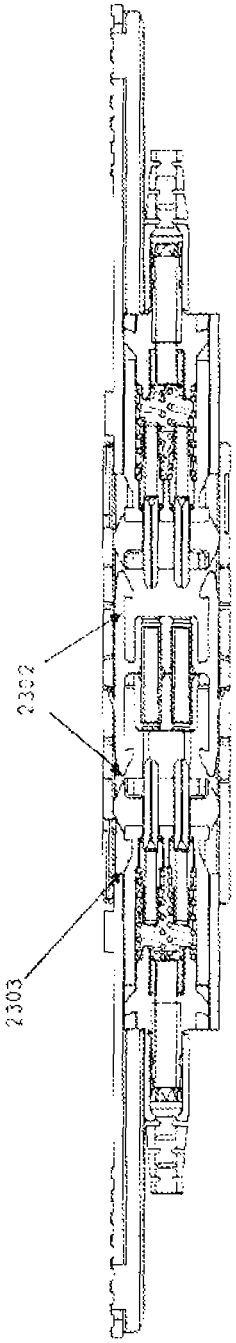

FIG. 23B

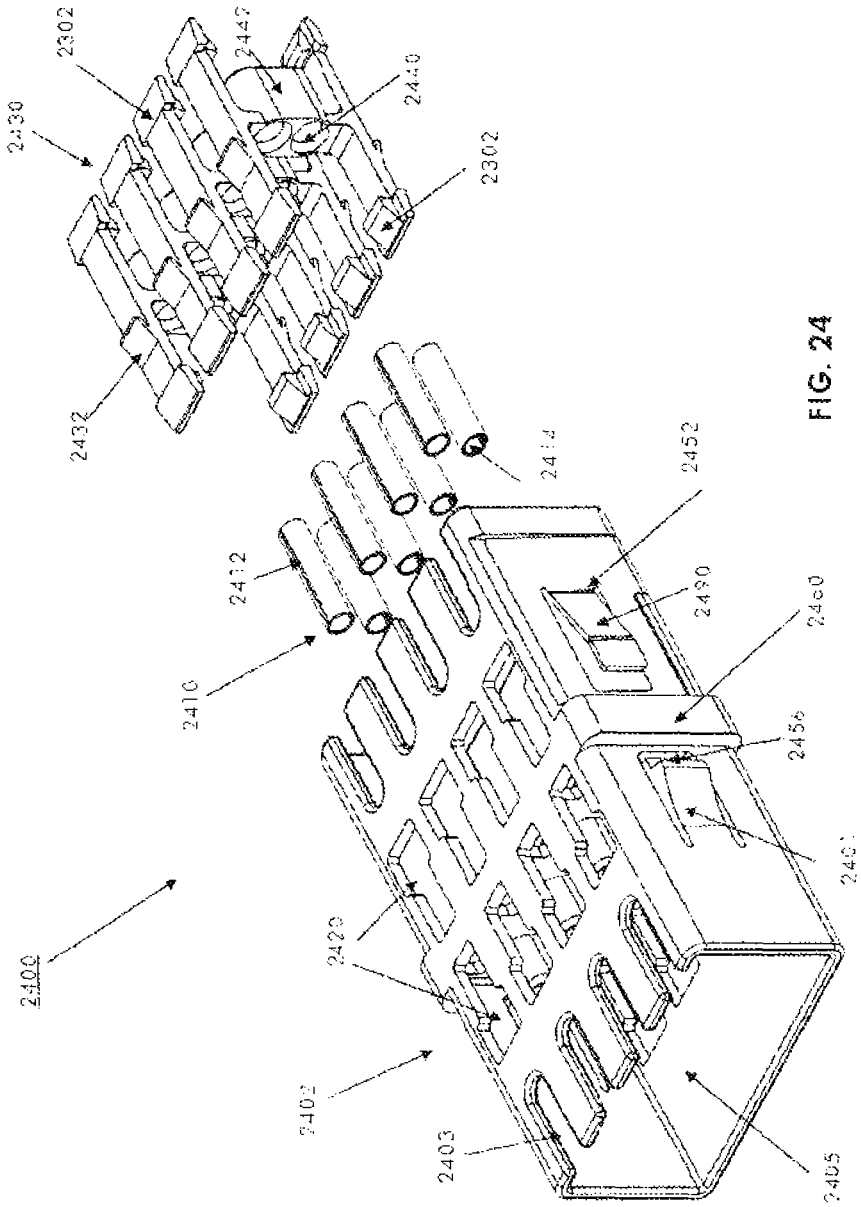
2400
2402
2403
2405
2410
2412
2414
2420
2430
2432
2440
2452
2456
2460
2490
2302
2302

FIG. 24

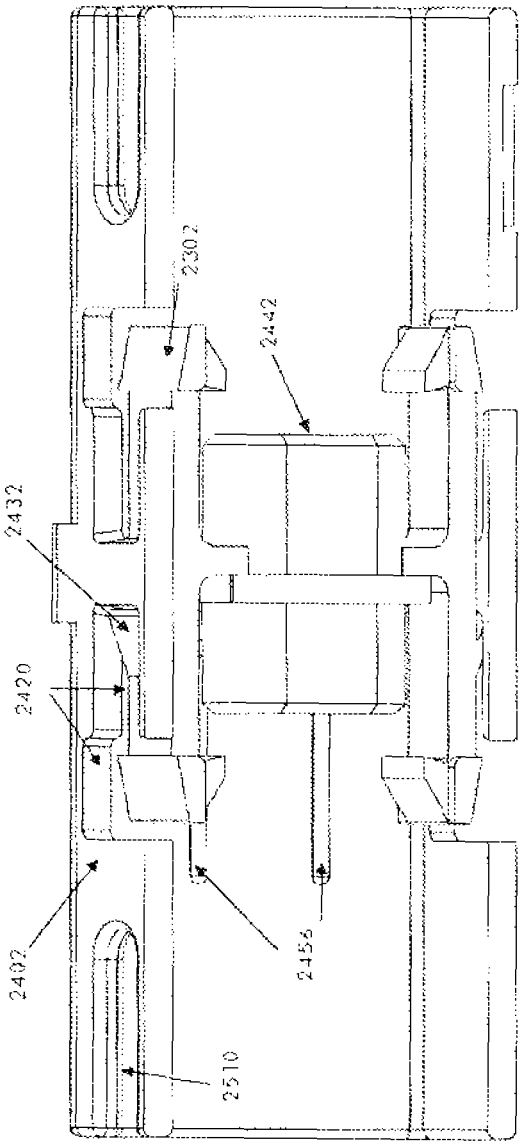

FIG. 25A

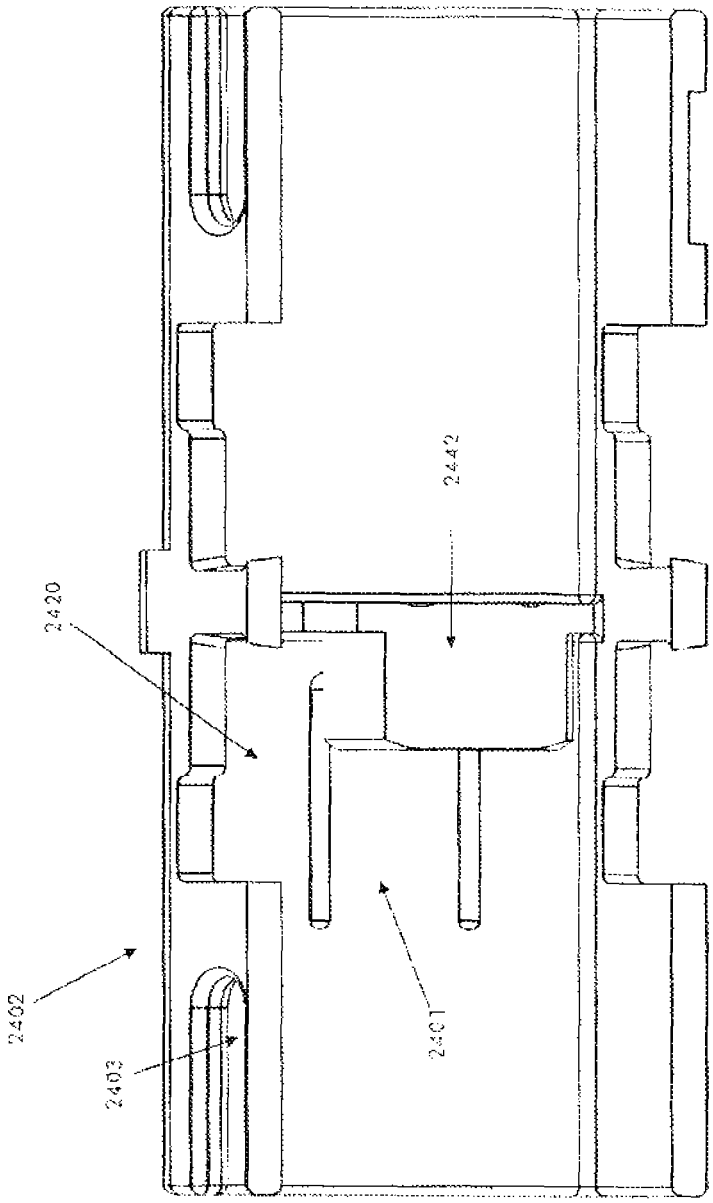

FIG. 25B

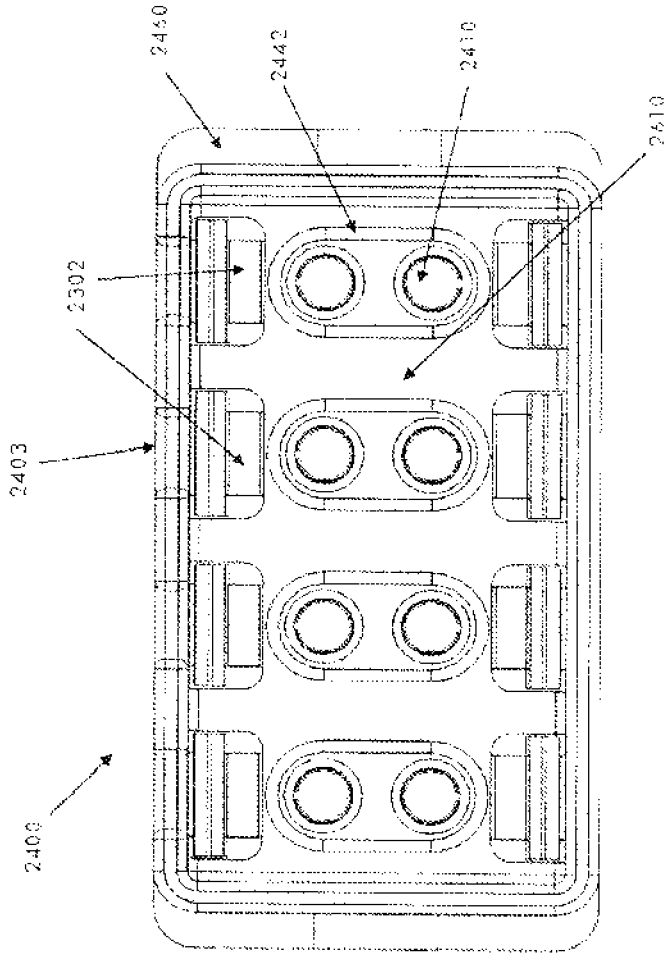

FIG. 26

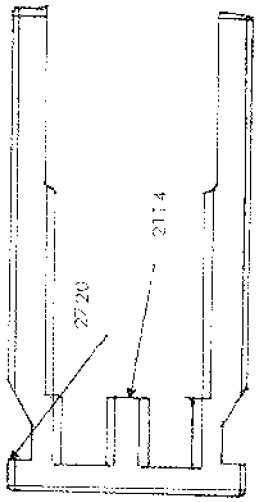

FIG. 27B

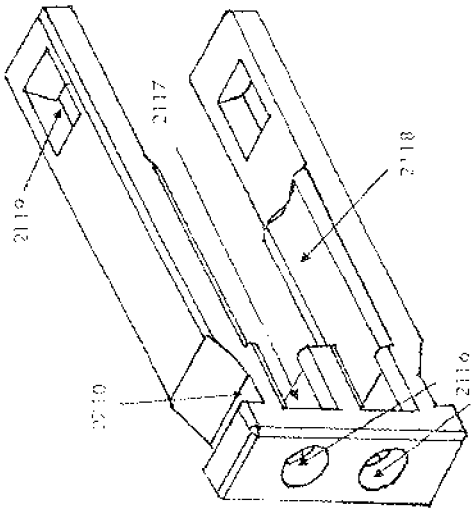

FIG. 27A

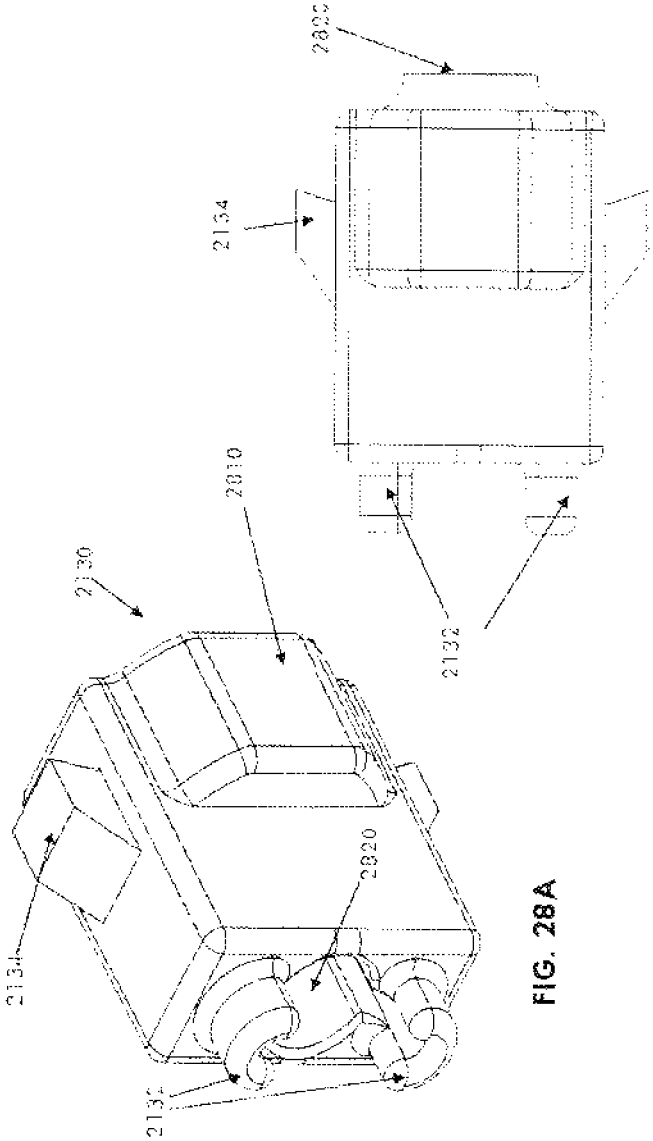

FIG. 28B

FIG. 28A

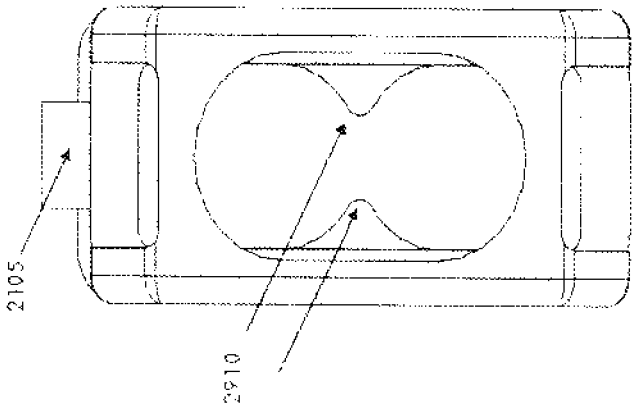

FIG. 29B

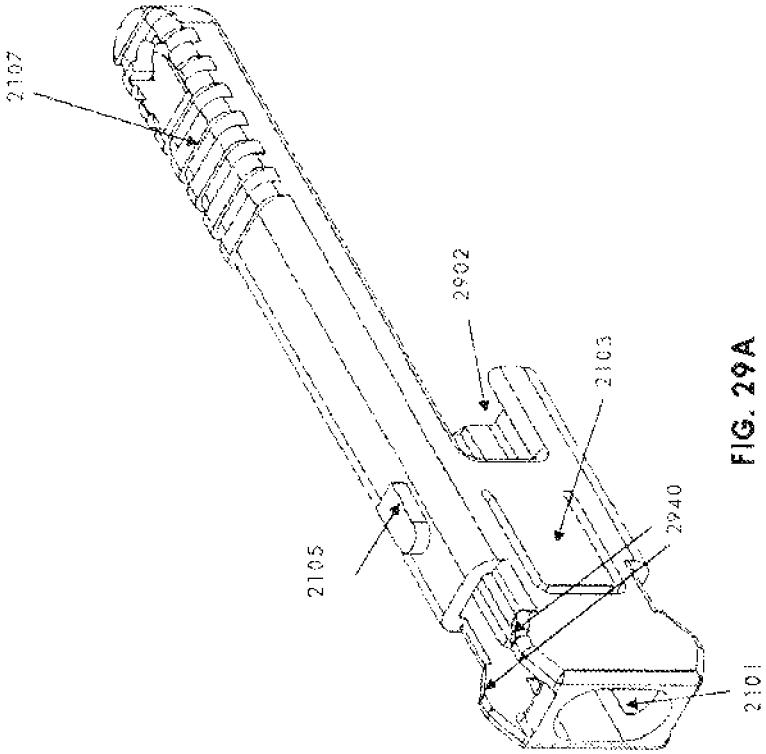

FIG. 29A

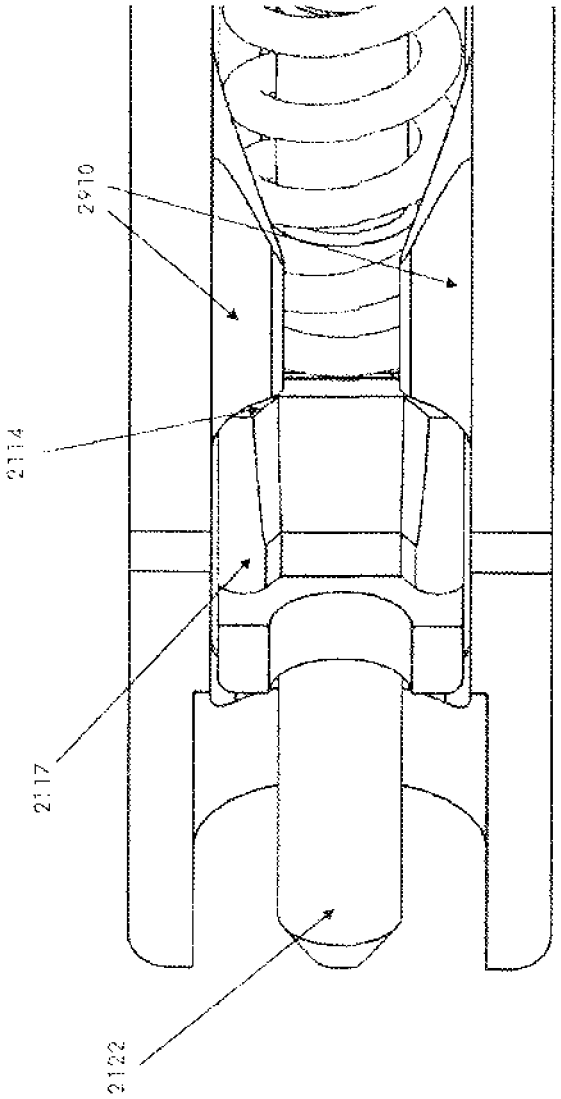

FIG. 29C

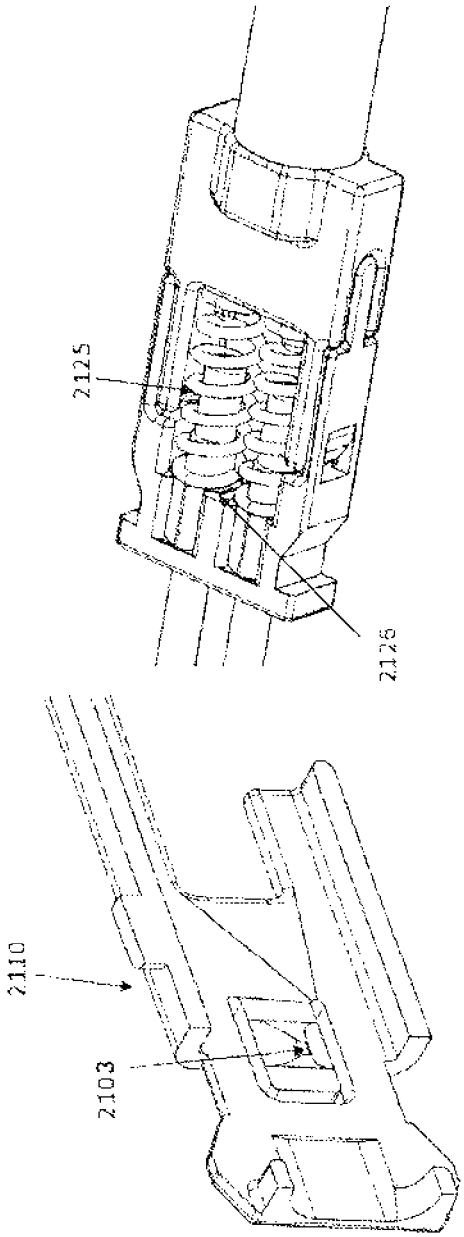

FIG. 29D

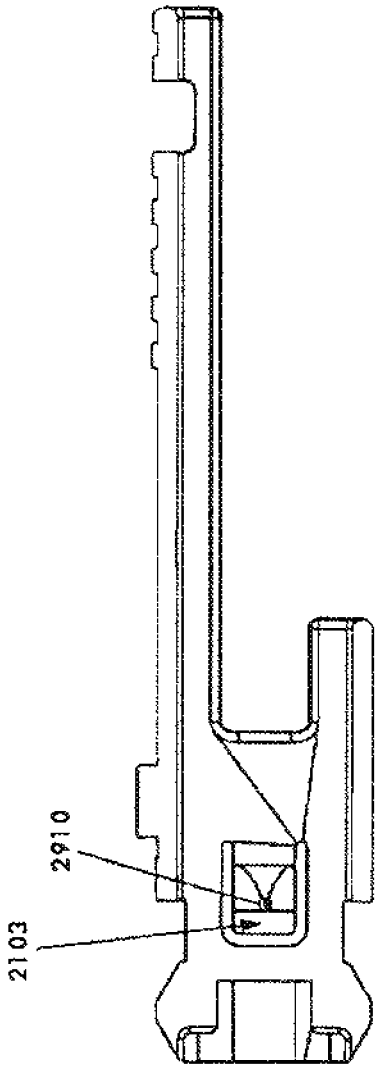

FIG. 29E

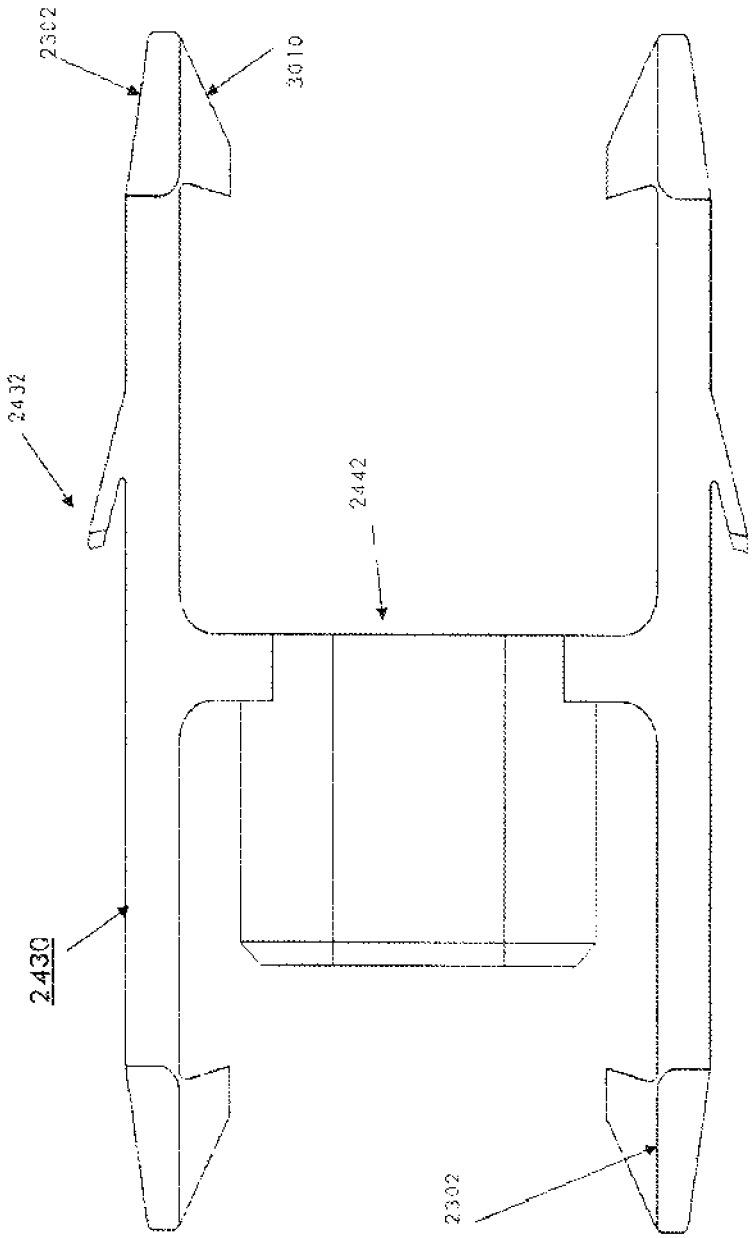

FIG. 30

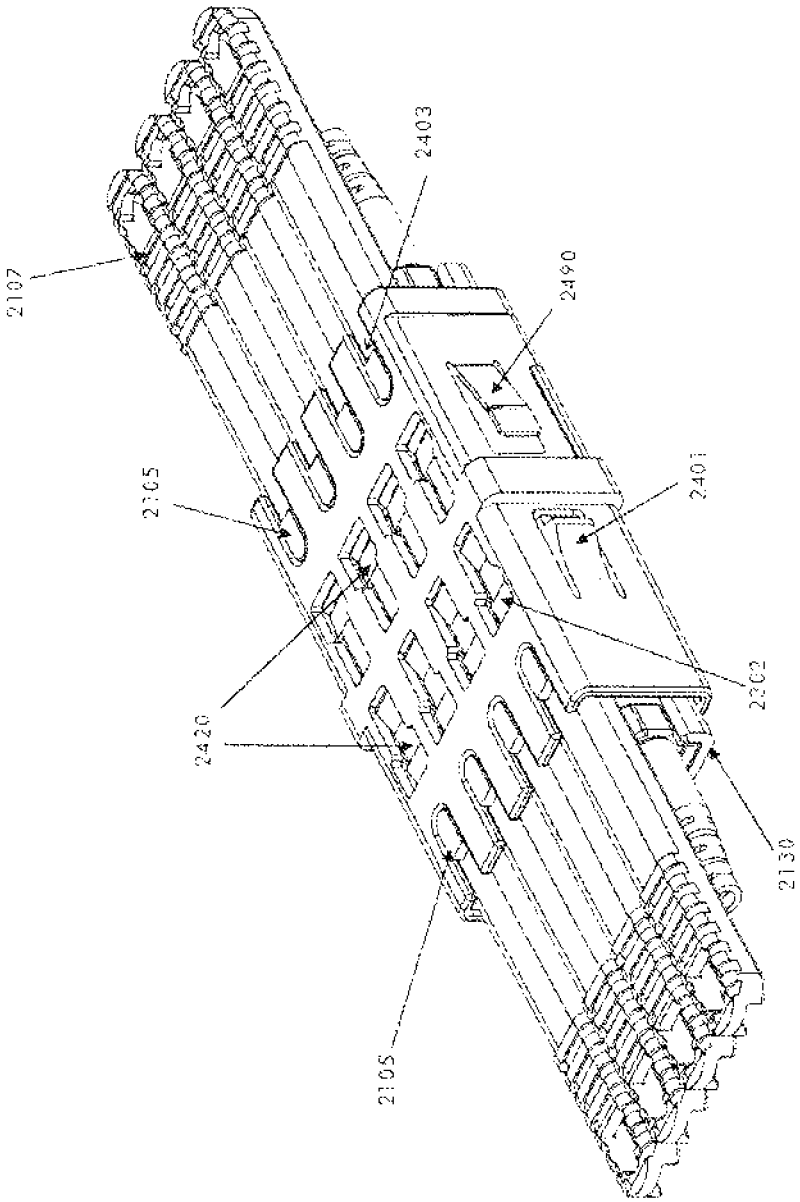

FIG. 31

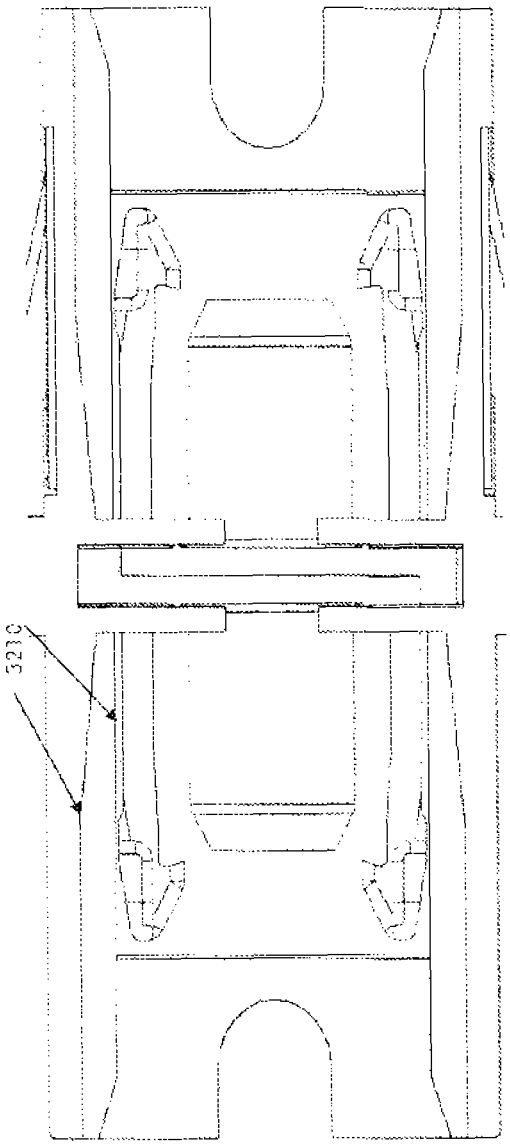

FIG. 32A

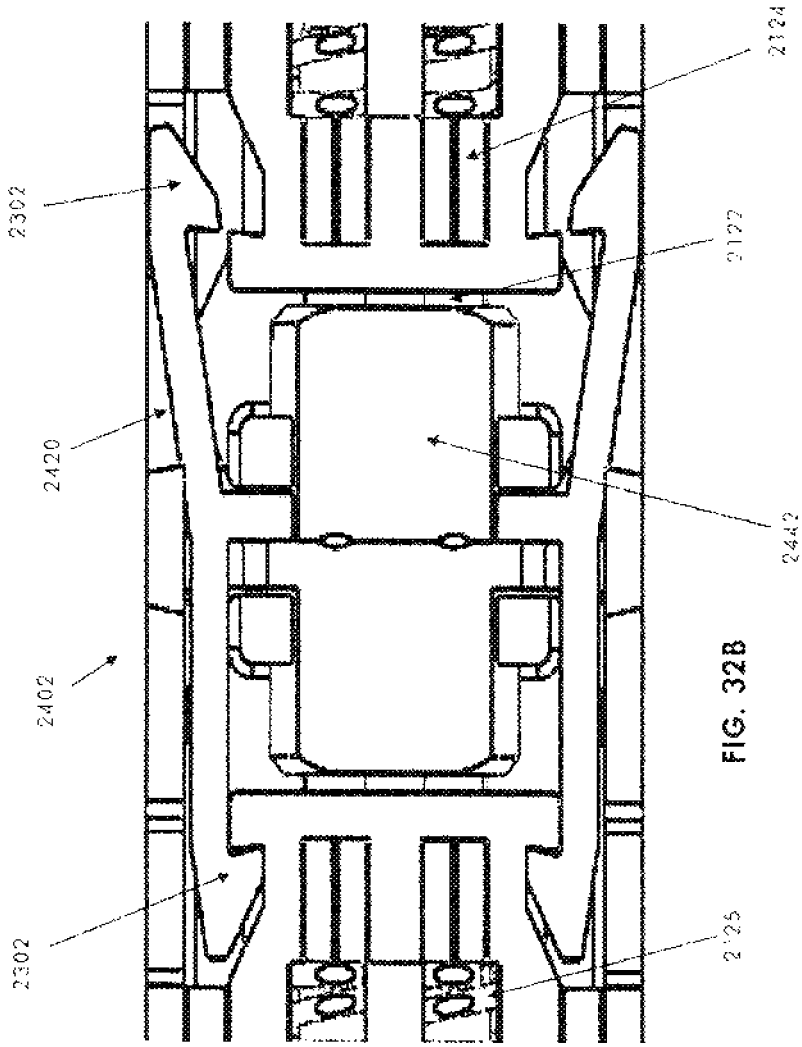

FIG. 32B

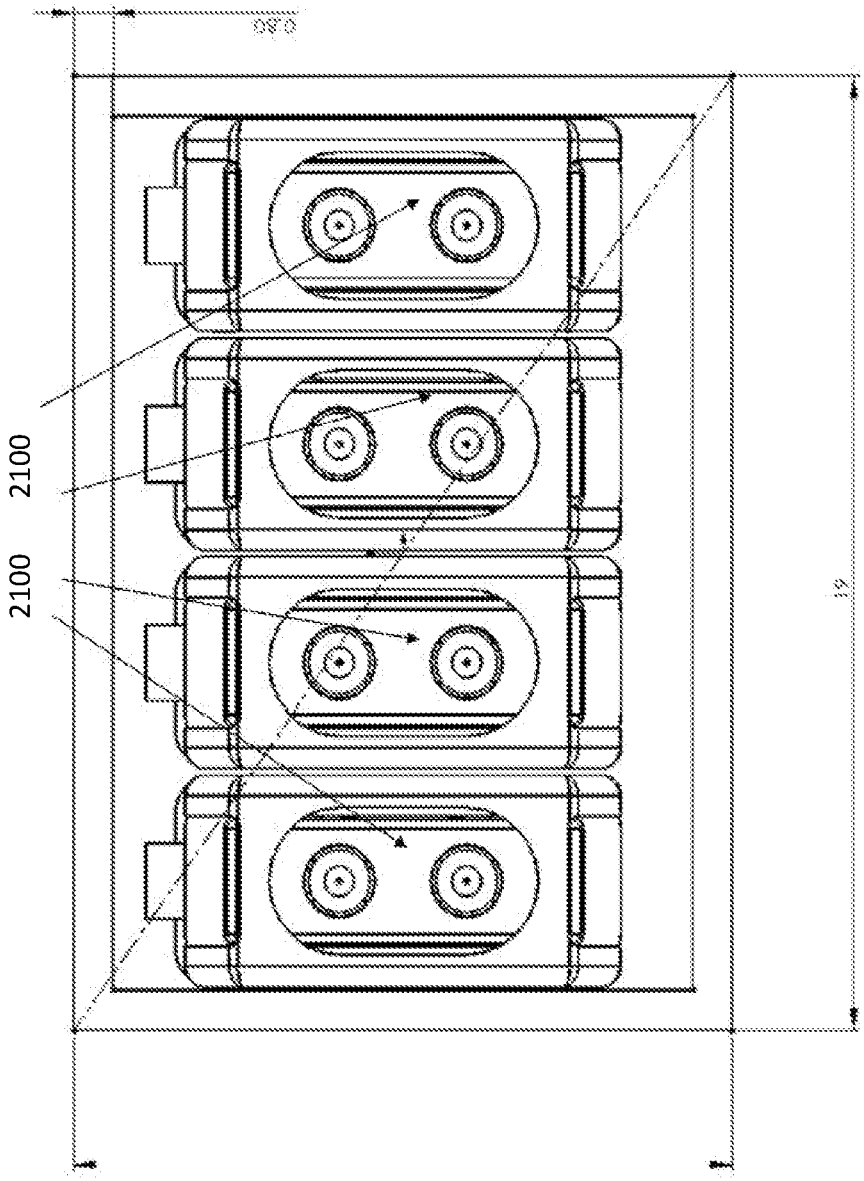

FIG. 33A

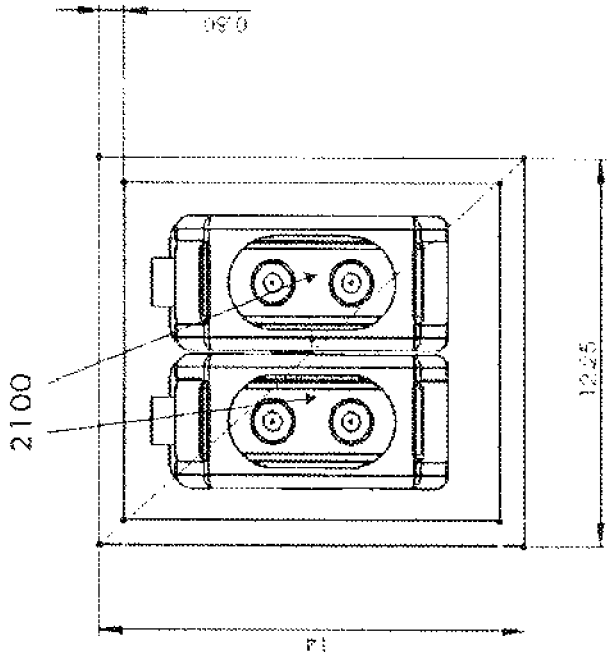

FIG. 33B

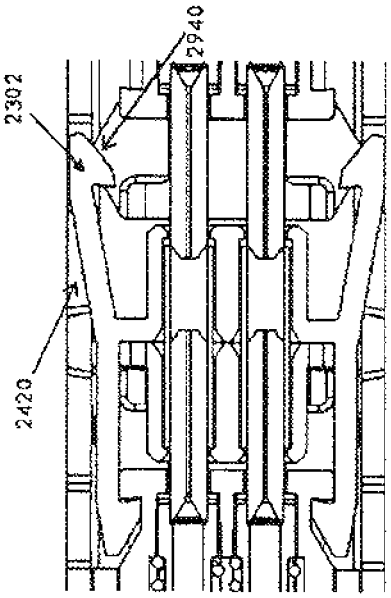

FIG. 34B

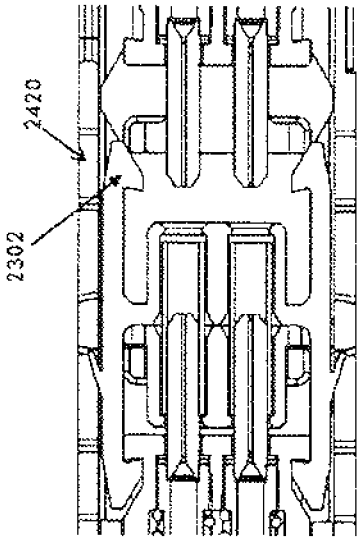

FIG. 34A

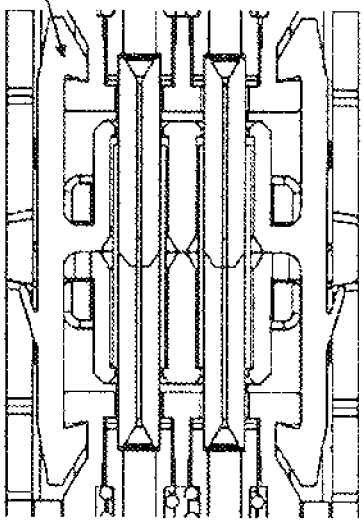

FIG. 34C

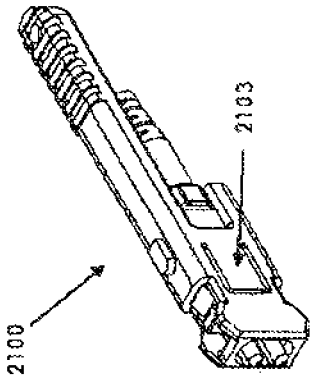

FIG. 35A

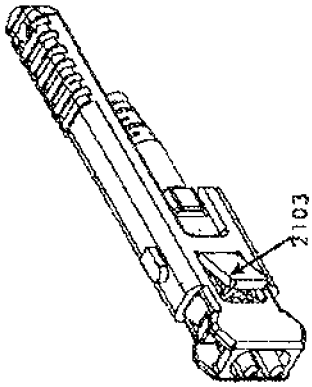

FIG. 35B

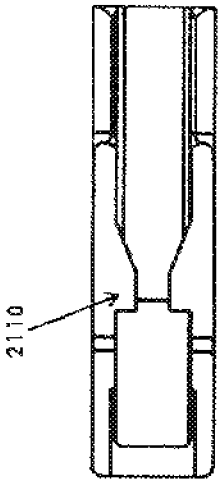

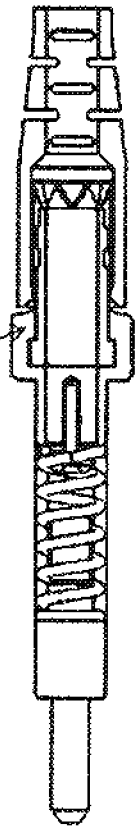

FIG. 35C

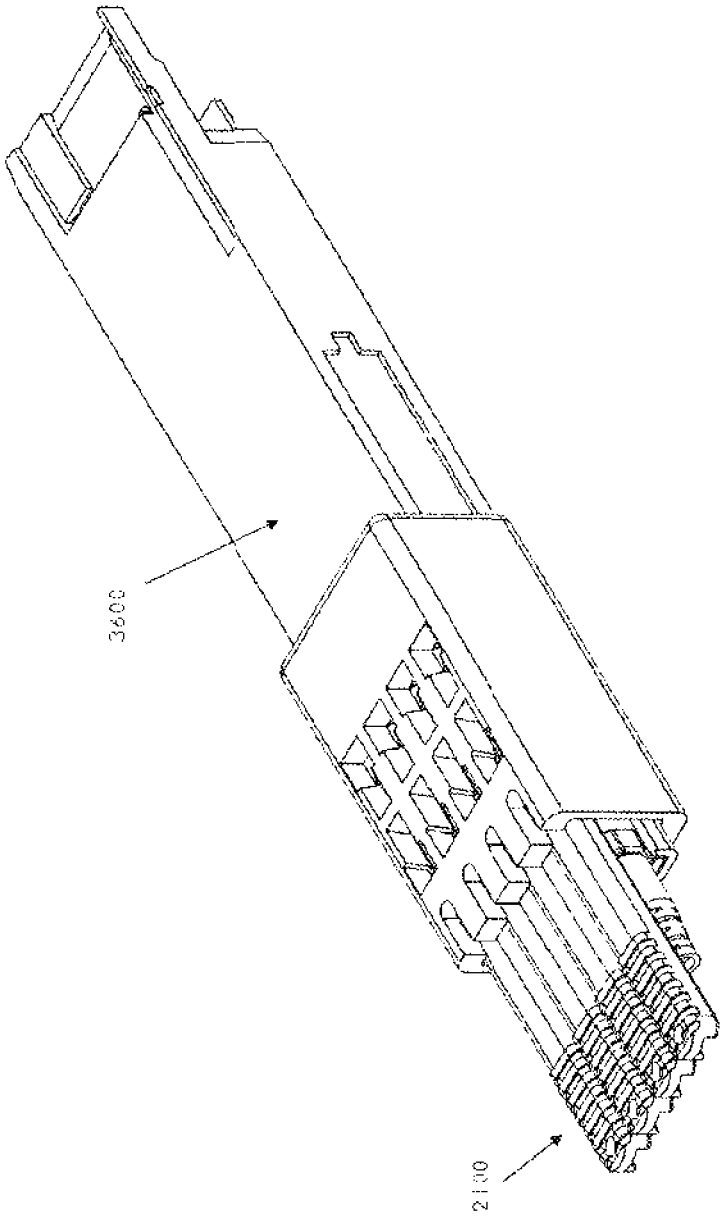

FIG. 36A

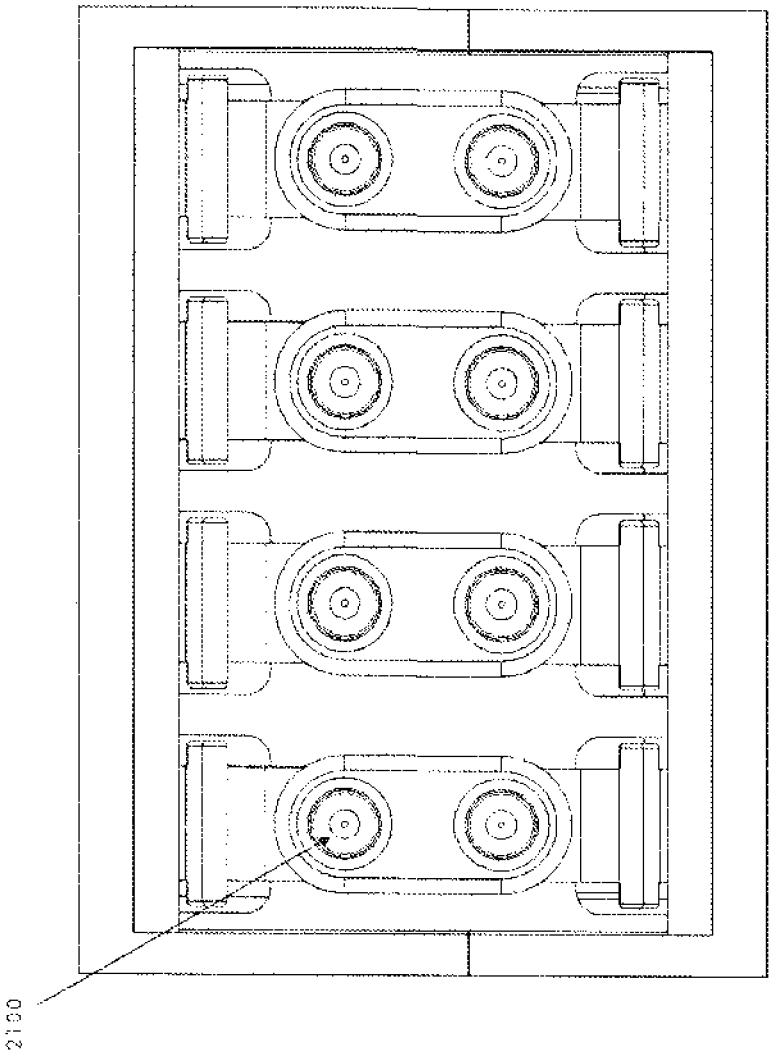

FIG. 36B

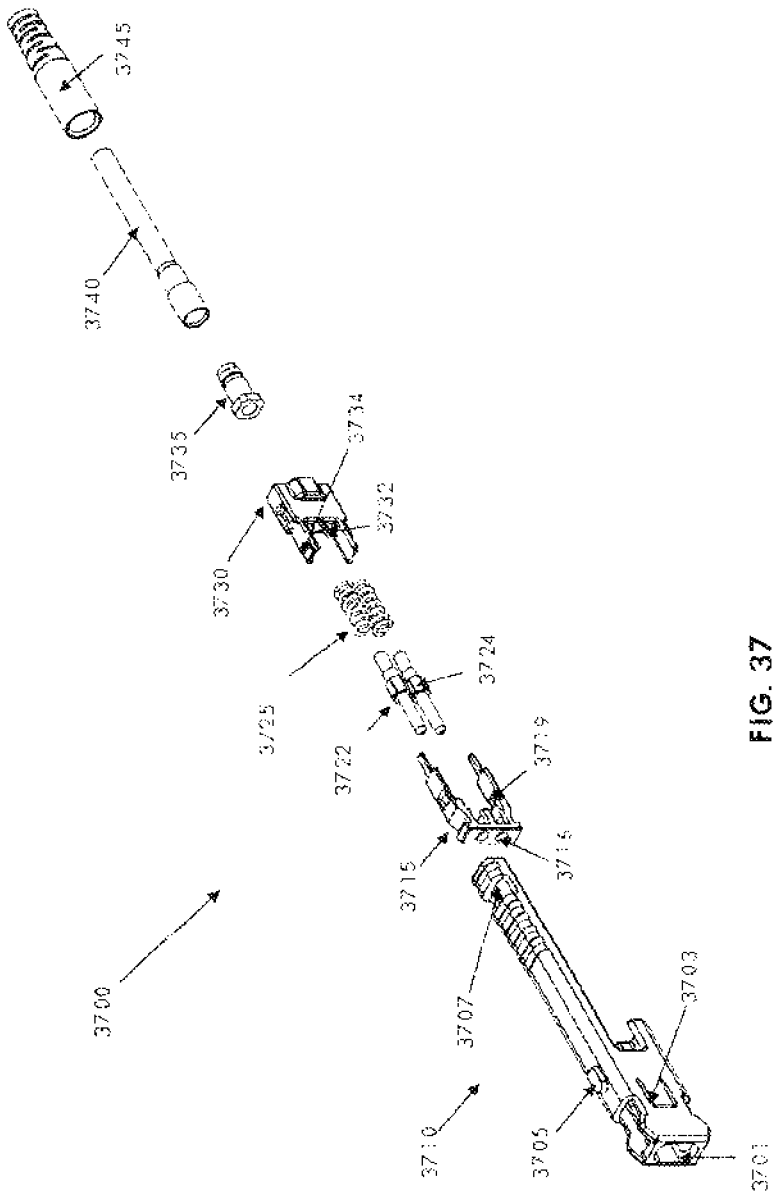
3745
3740
3735
3734
3732
3730
3725
3724
3722
3719
3715
3716
3700
3707
3703
3710
3705
3701

FIG. 37

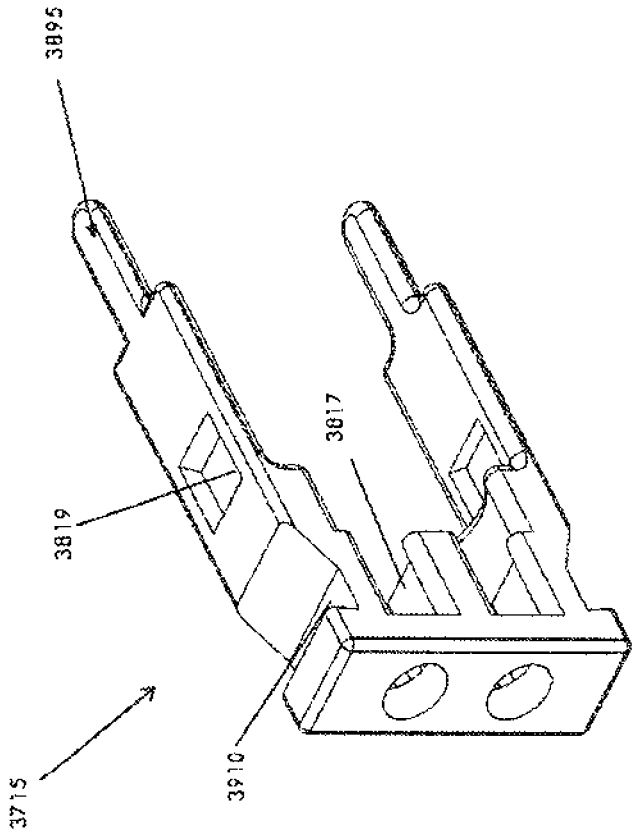

FIG. 38

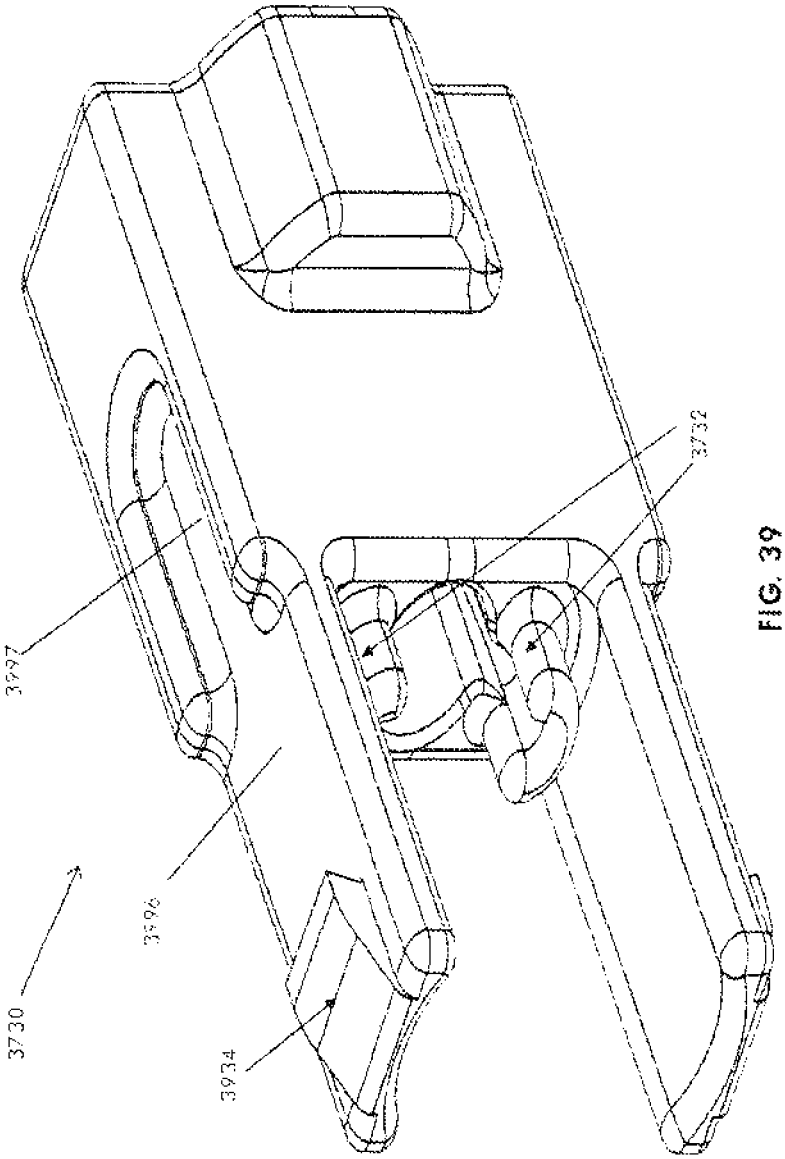

FIG. 39

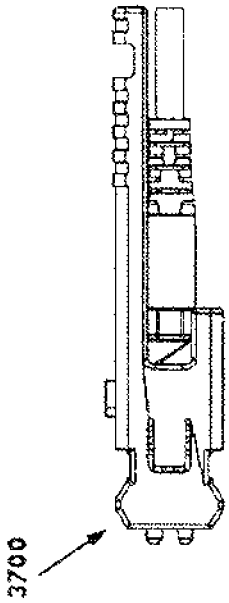

FIG. 40A

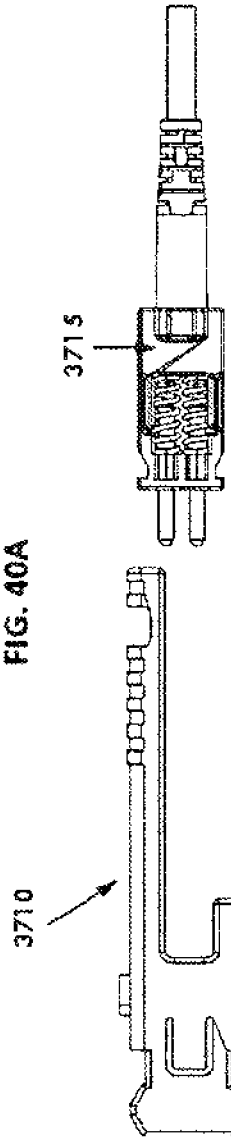

FIG. 40B

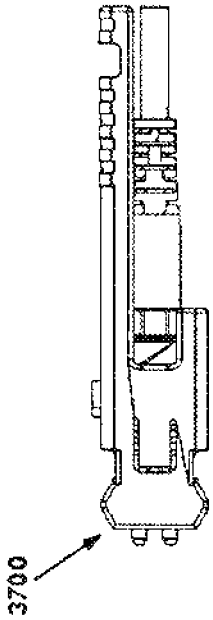

FIG. 40C

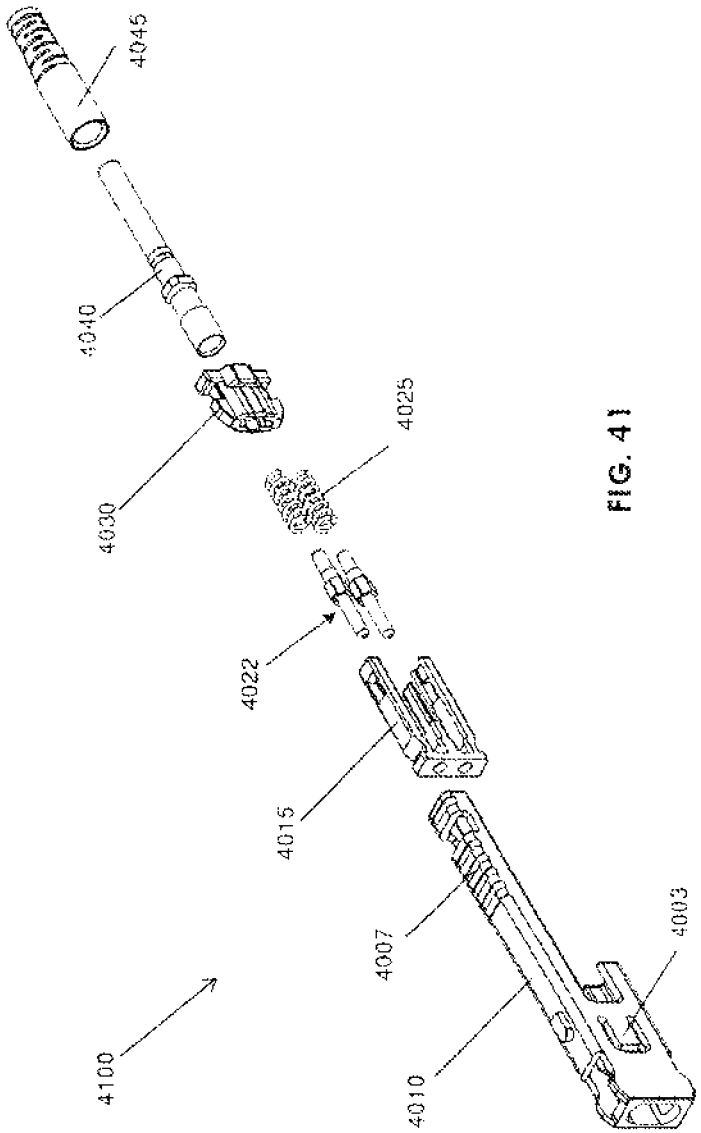

FIG. 41

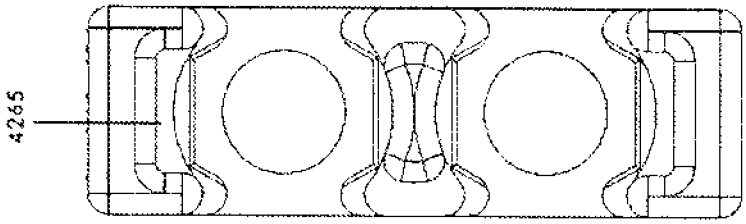

FIG. 42B

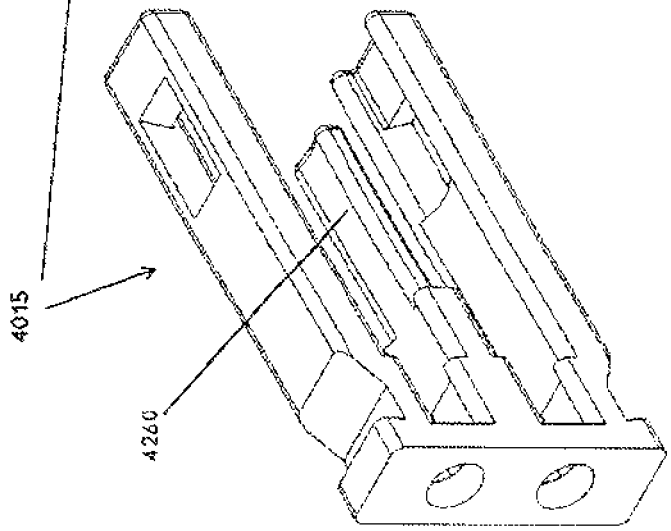

FIG. 42A

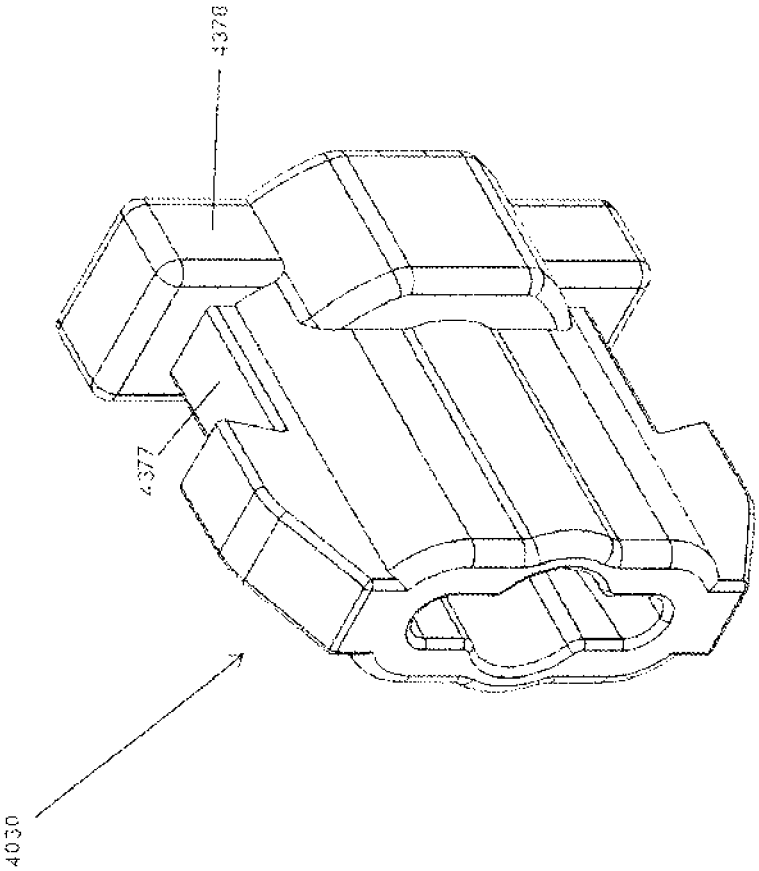

FIG. 43

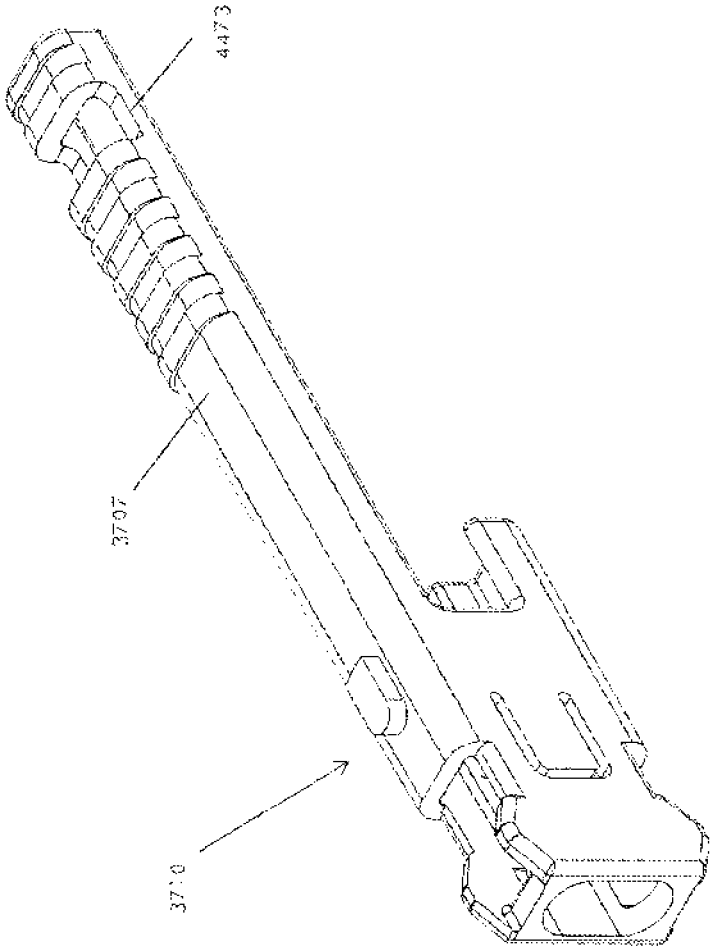

FIG. 44A

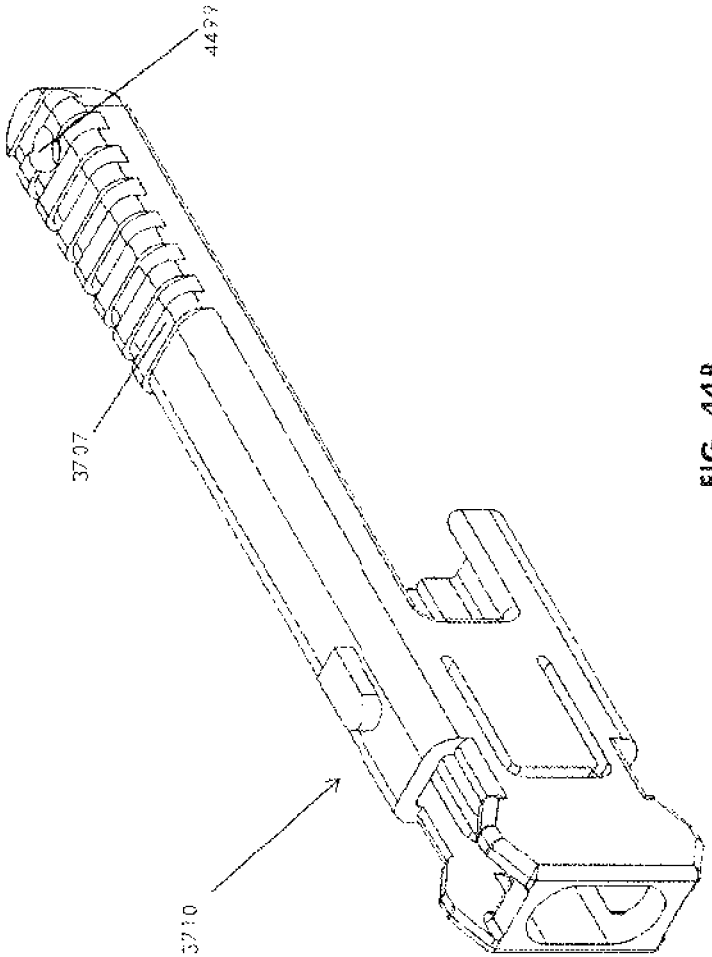

FIG. 44B

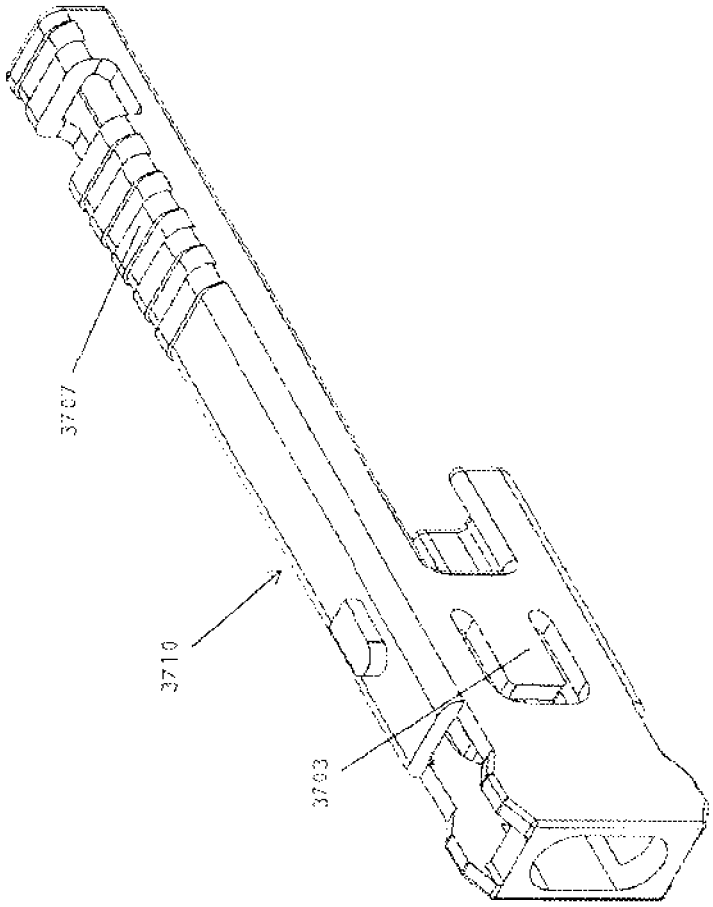

FIG. 44C

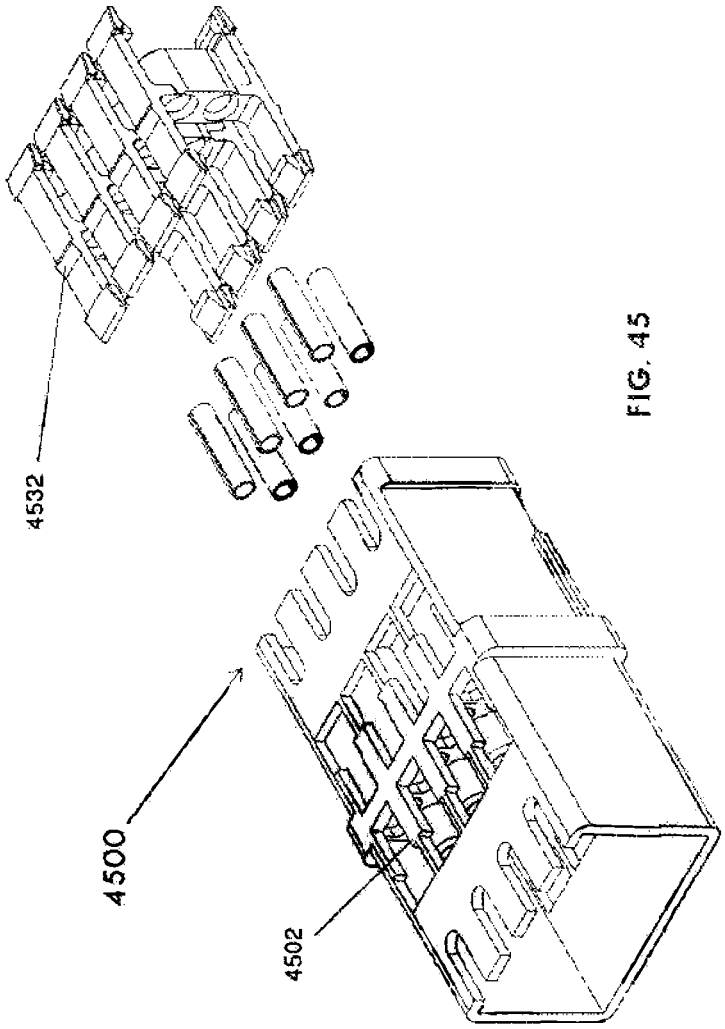

FIG. 45

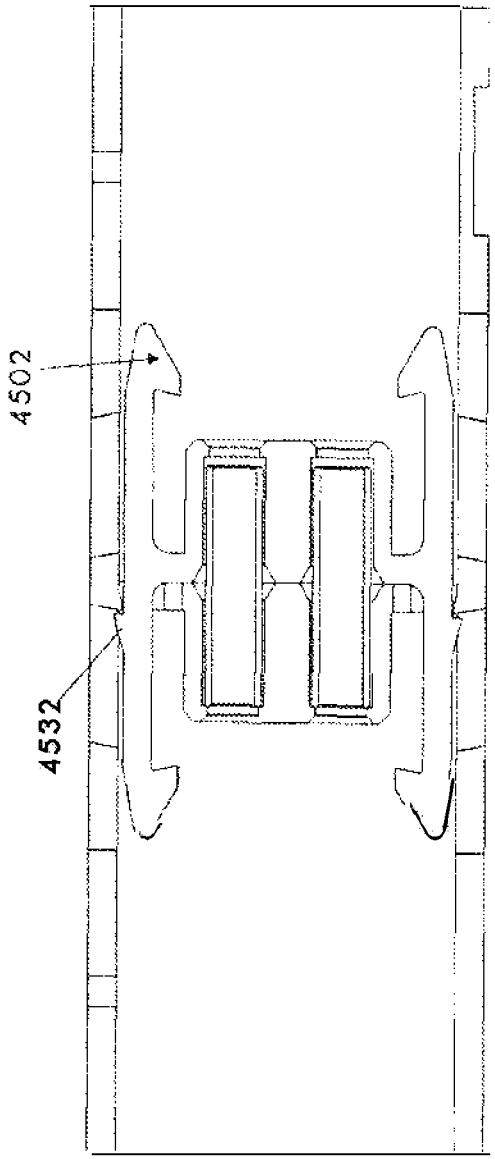

FIG. 46

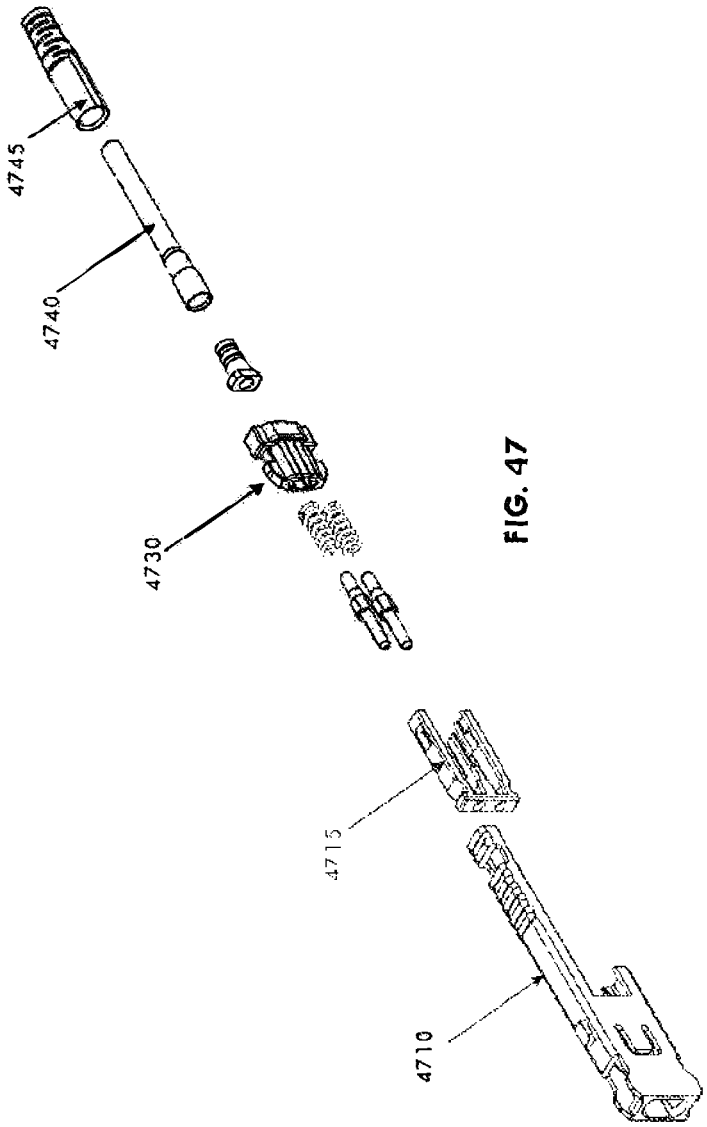

FIG. 47

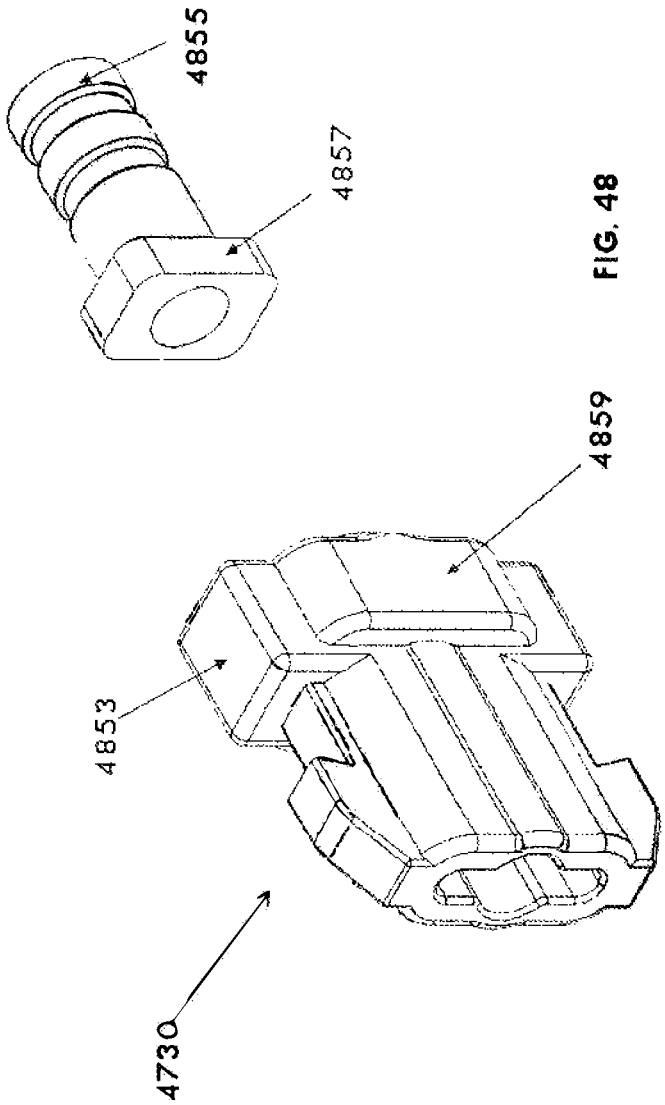

FIG. 48

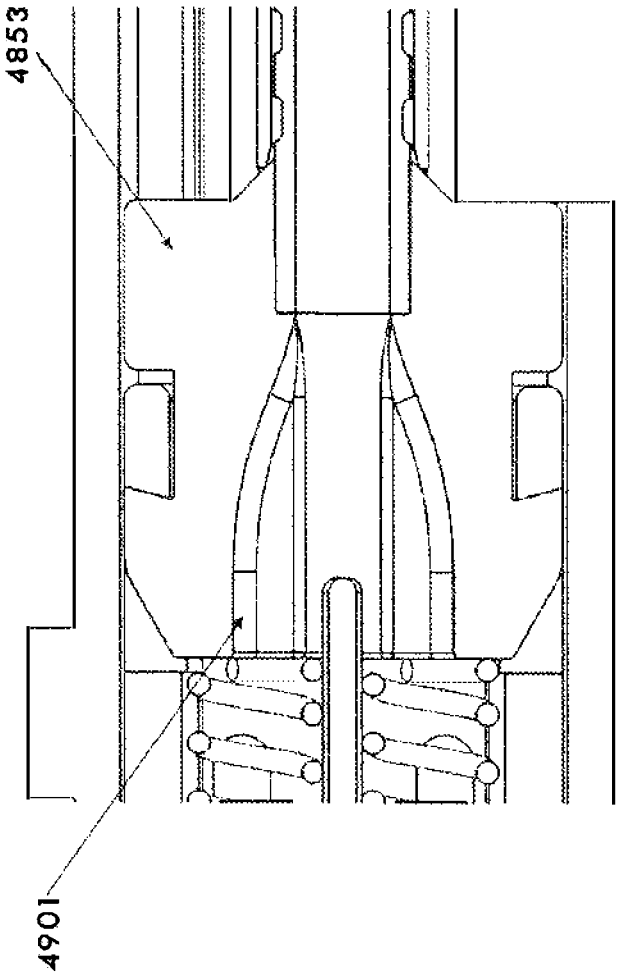

FIG. 49

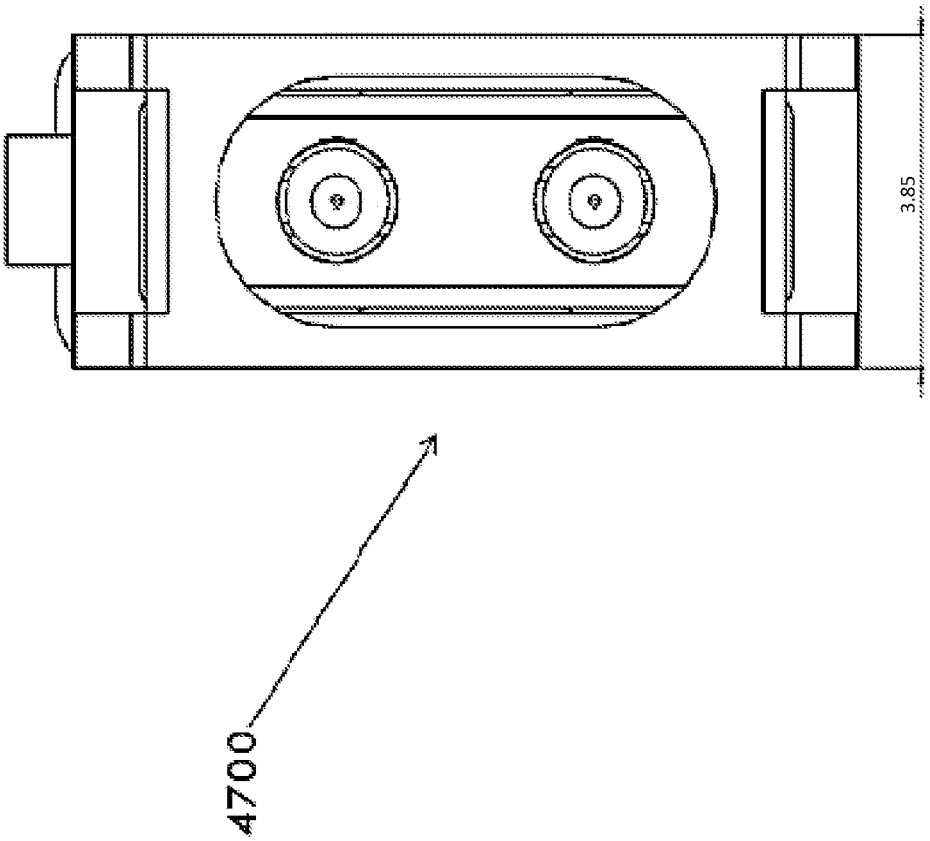

FIG. 50

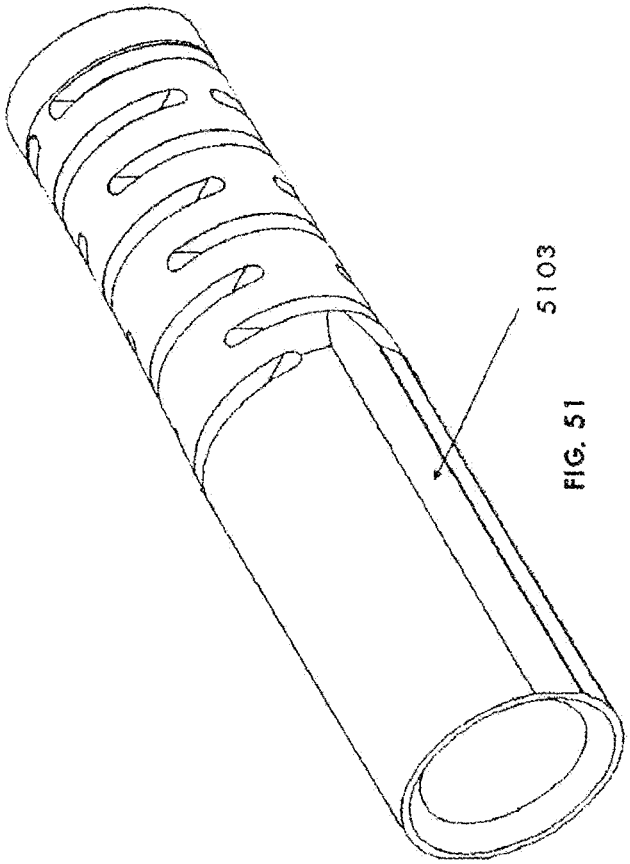

FIG. 51

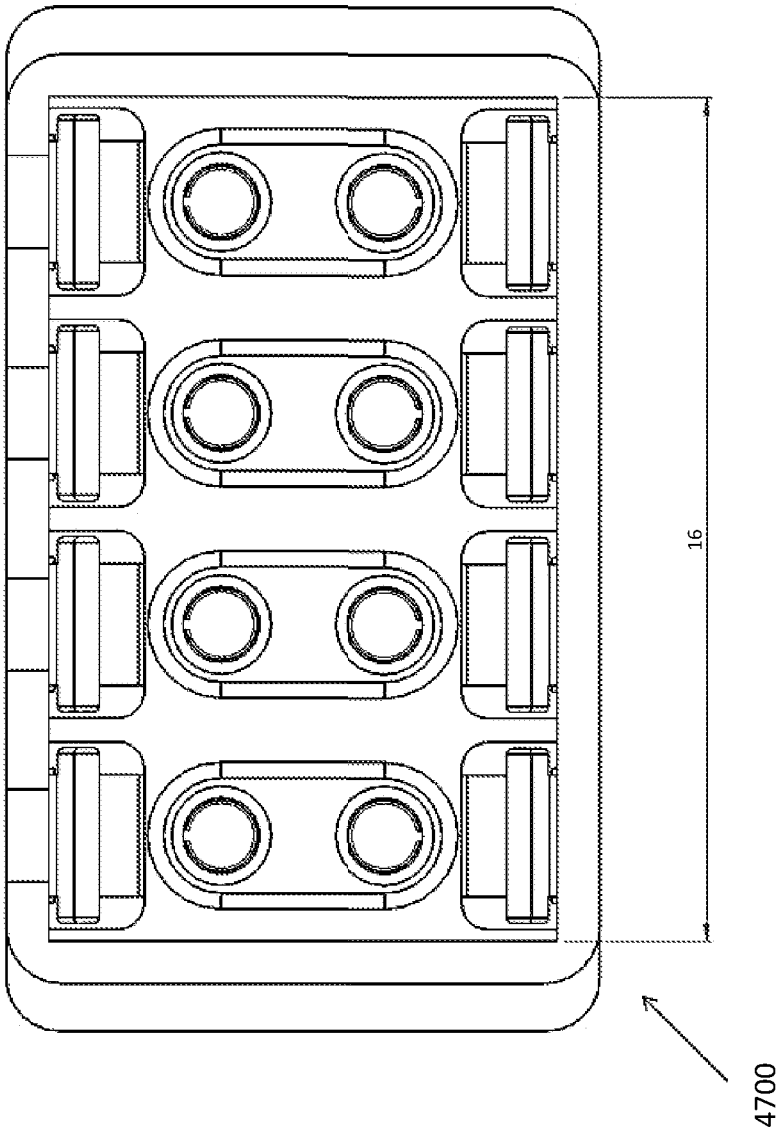

FIG. 52

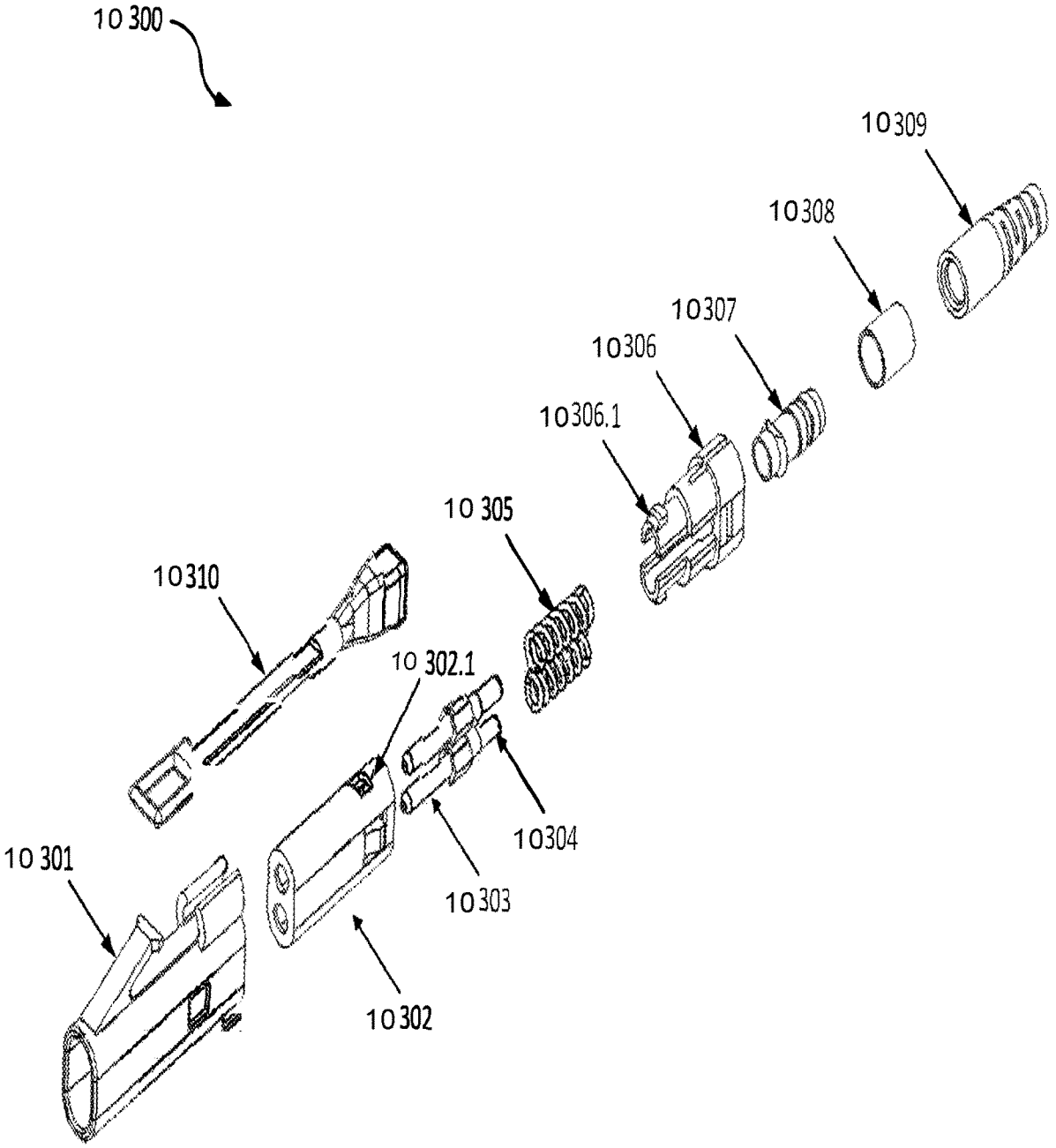
10 300
10309
10308
10307
10306
10306.1
10 305
10310
10 302.1
10304
10 301
10303
10302

FIG. 53

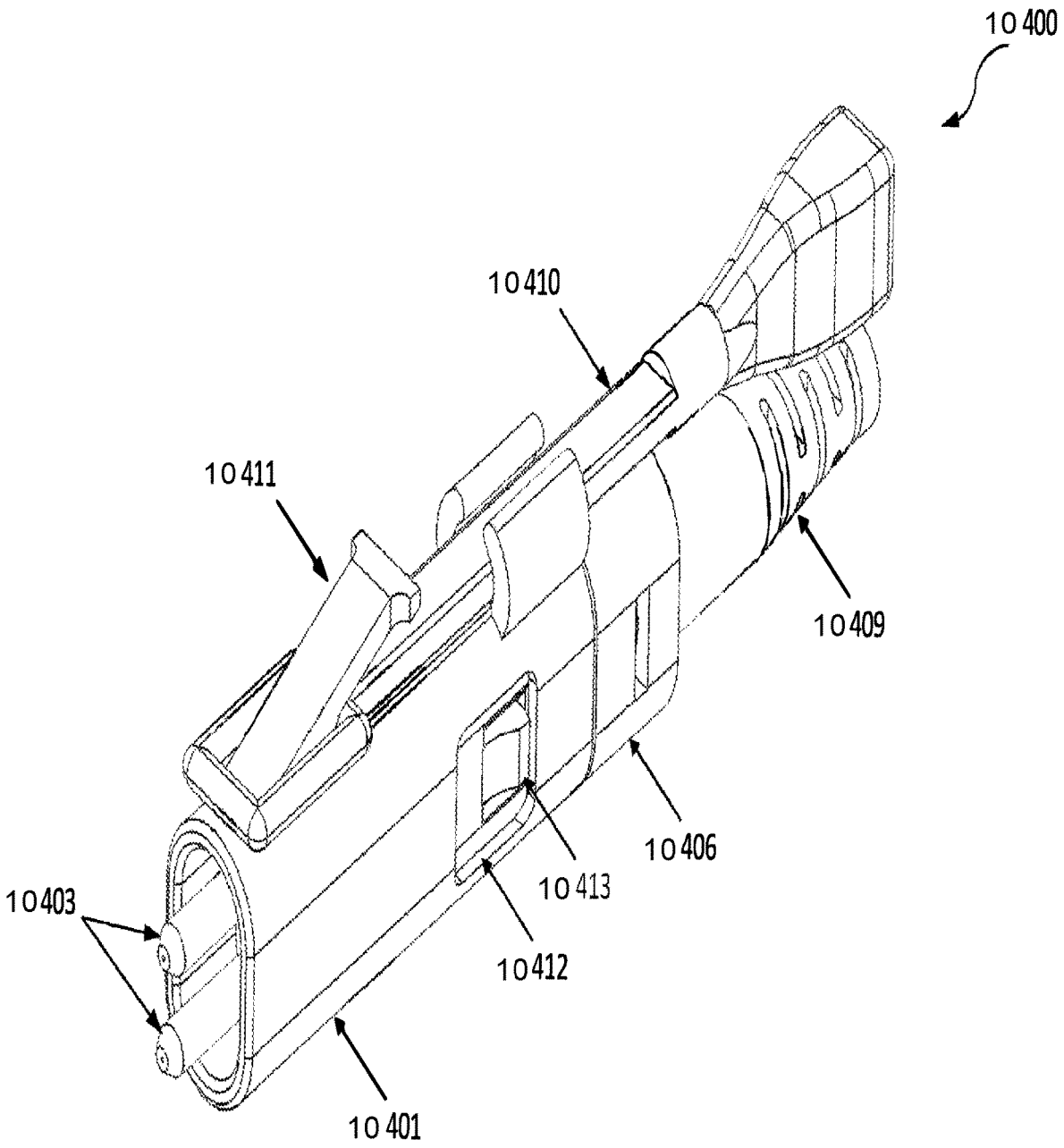

FIG. 54

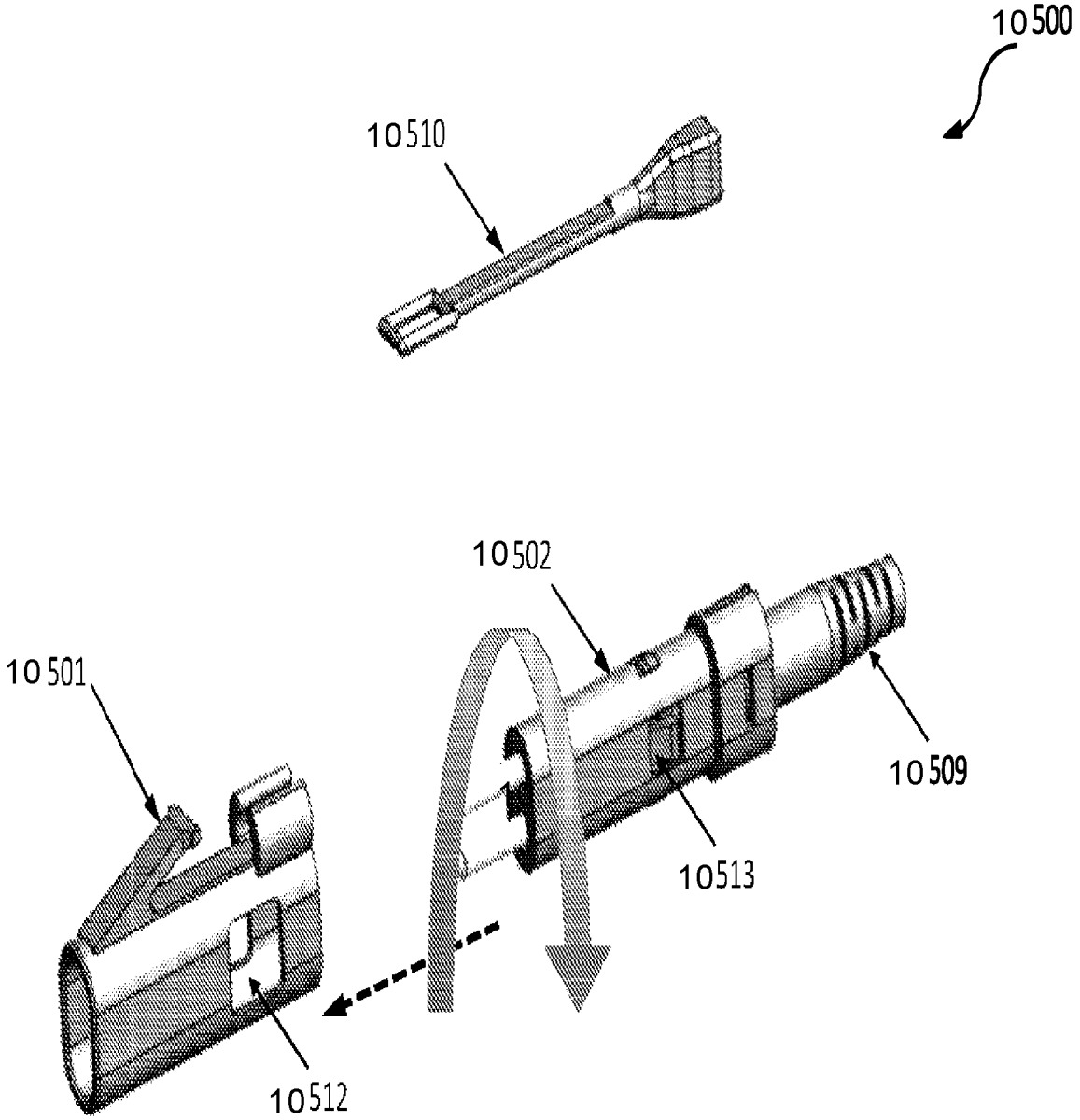

FIG. 55

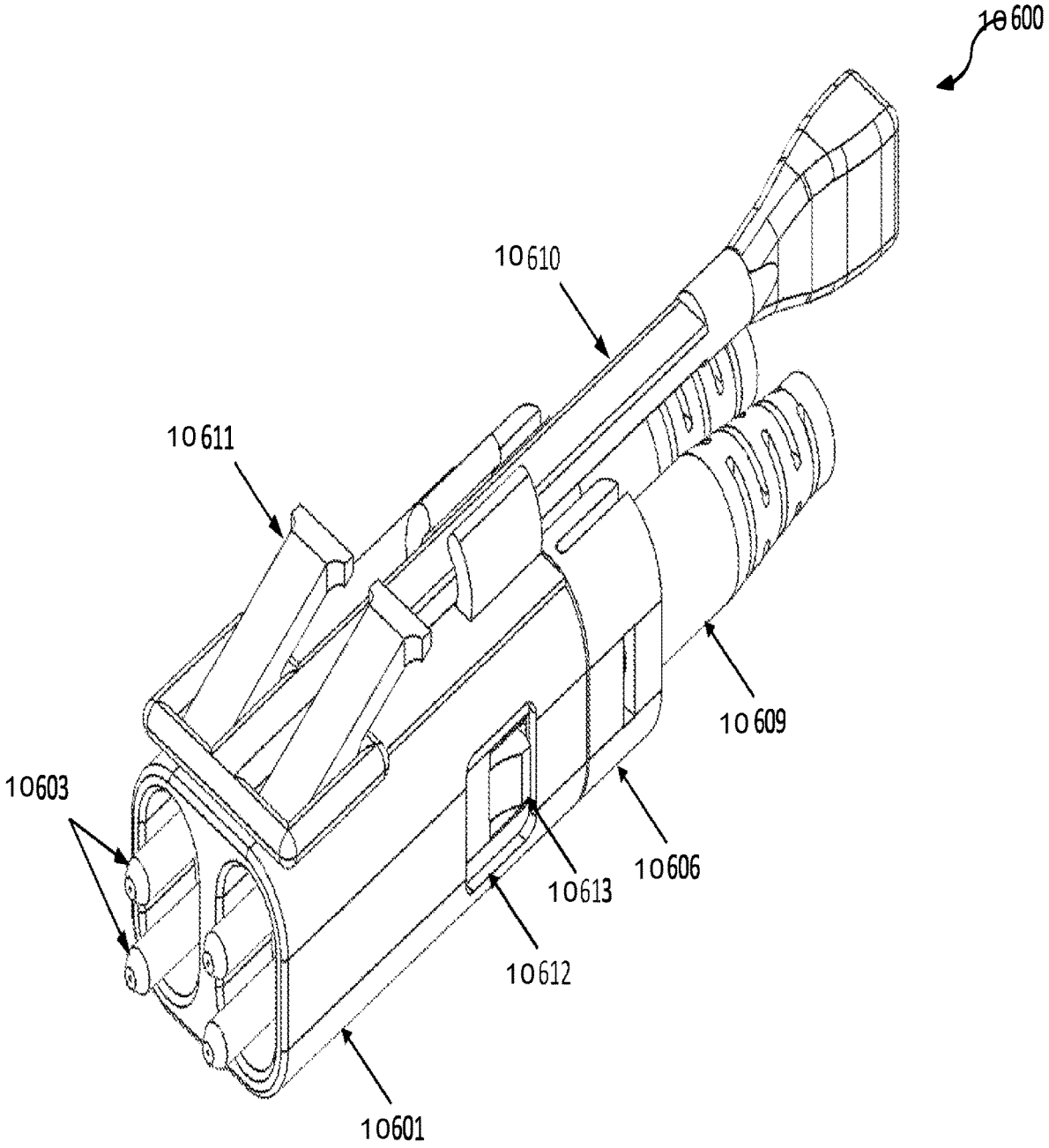

FIG. 56

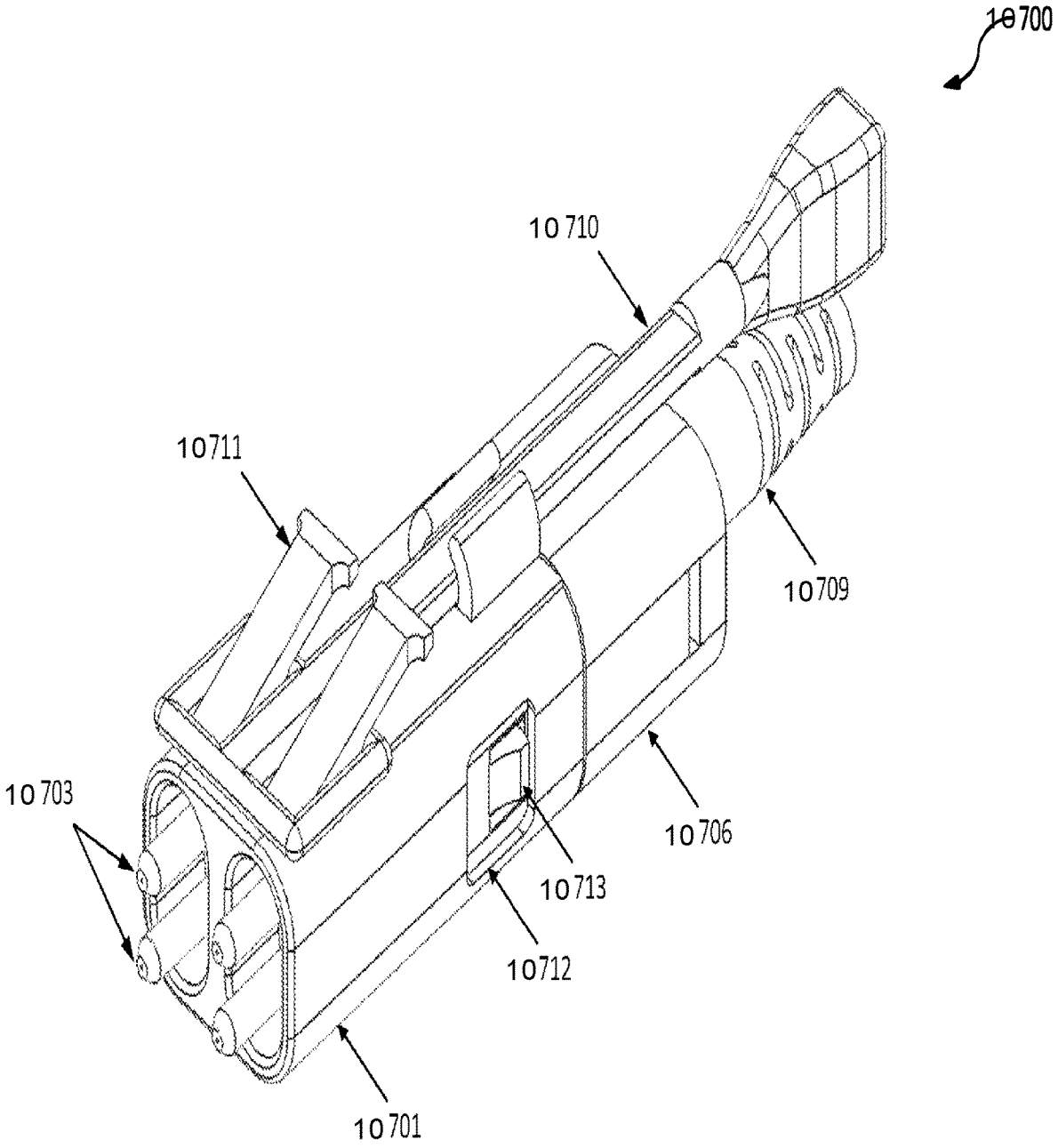

FIG. 57

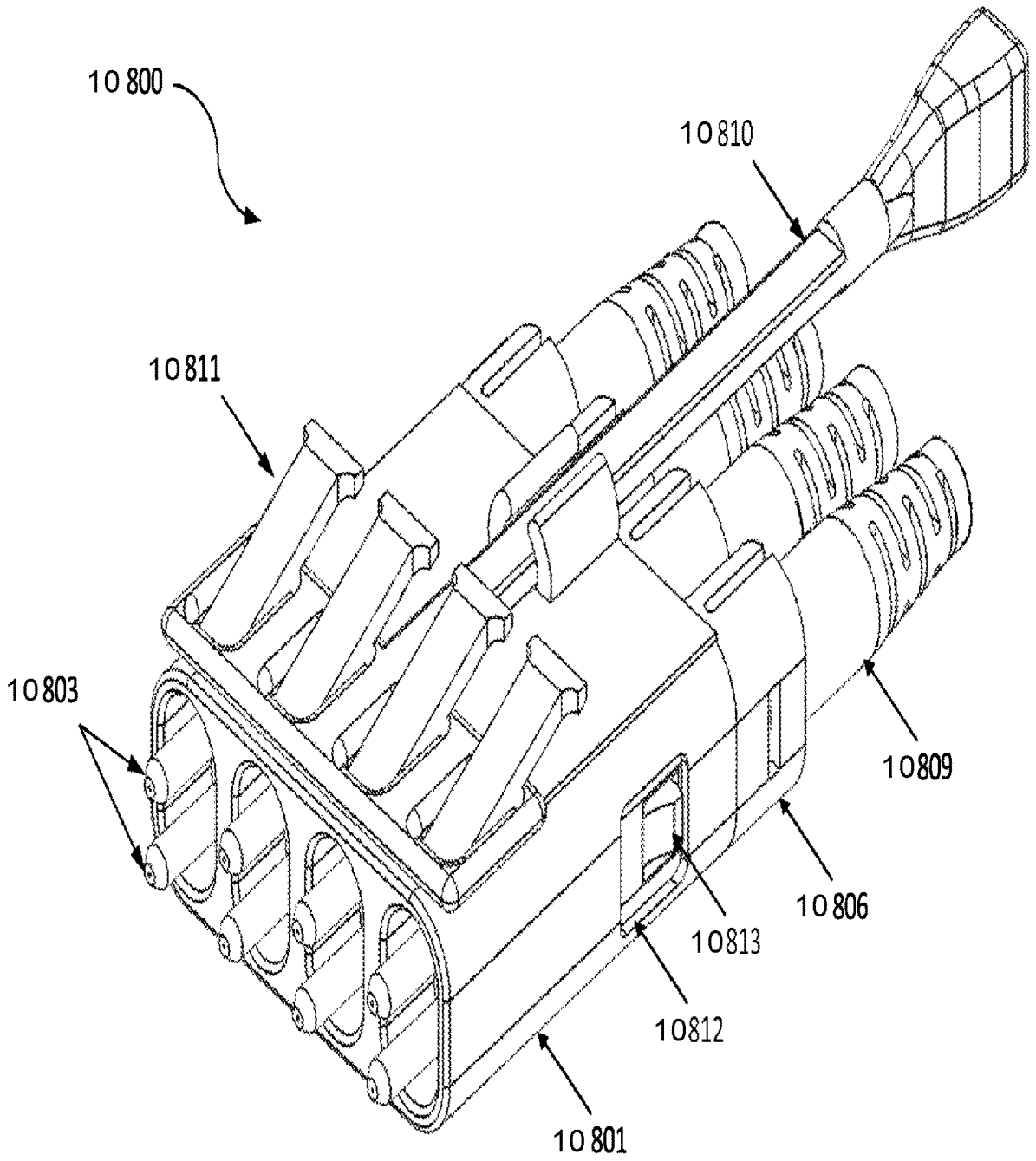

FIG. 58

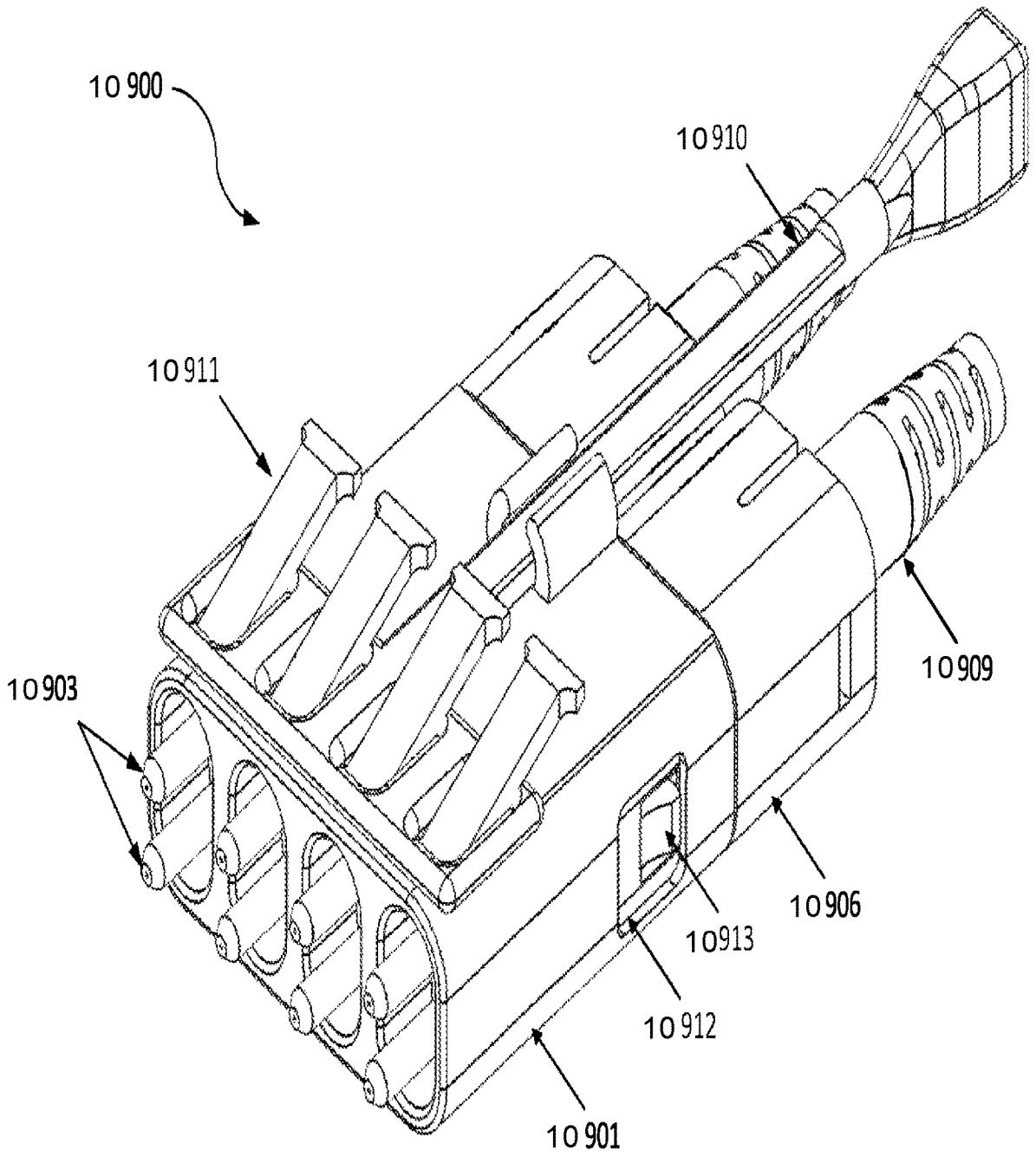

FIG. 59

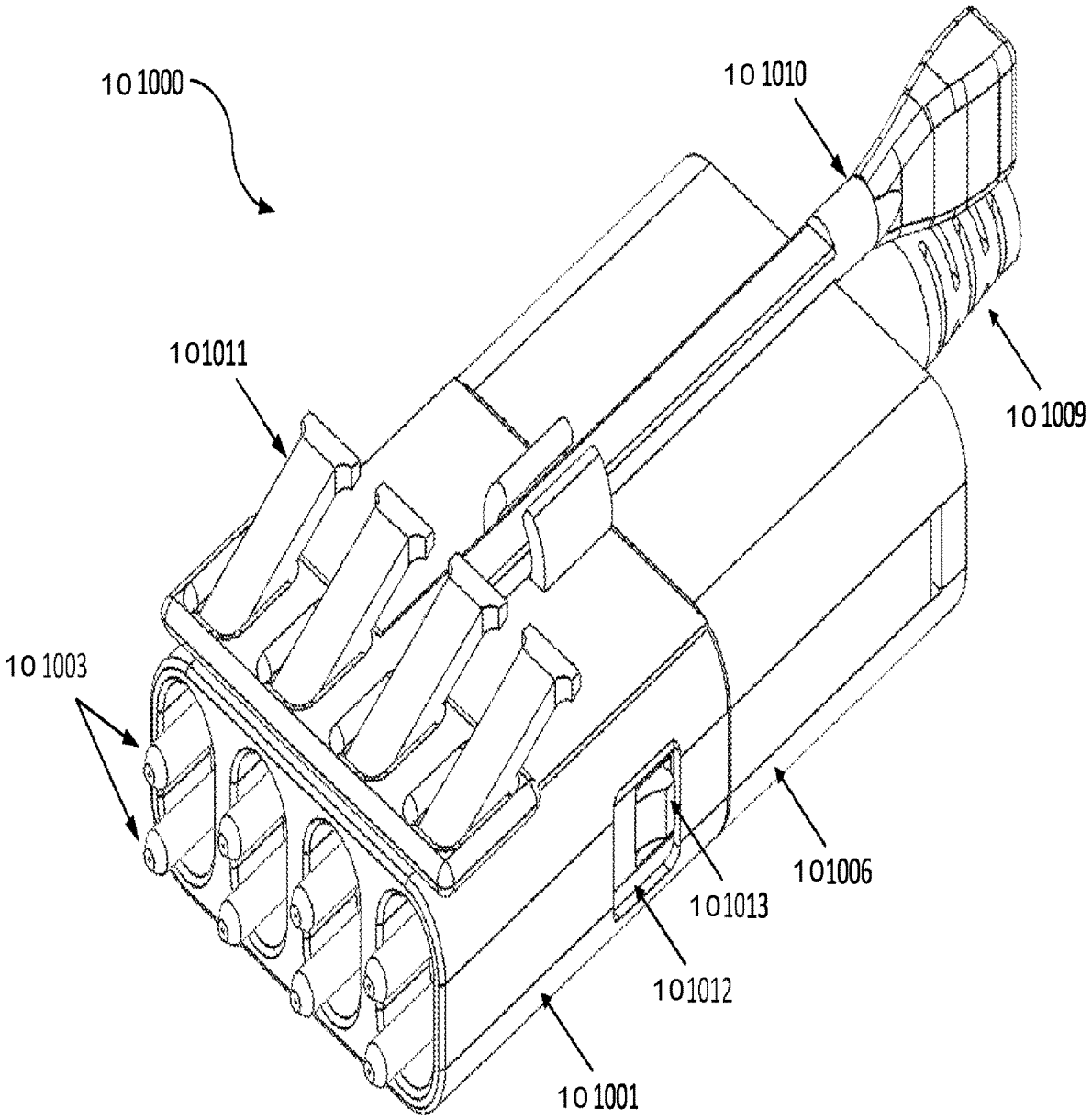
10 1000
10 1010
101011
10 1009
10 1003
101006
101013
101012
10 1001

FIG. 60

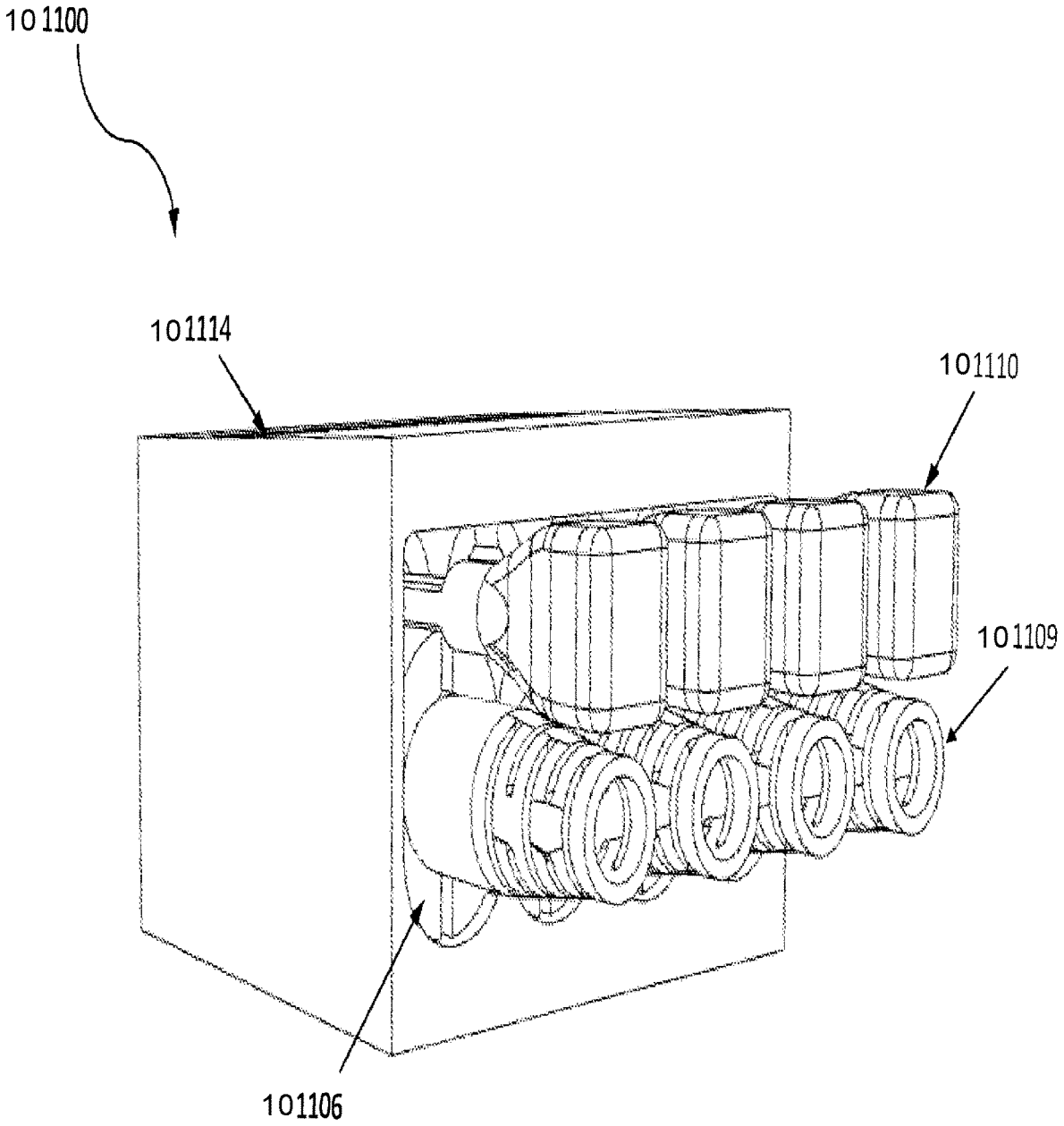

FIG. 61

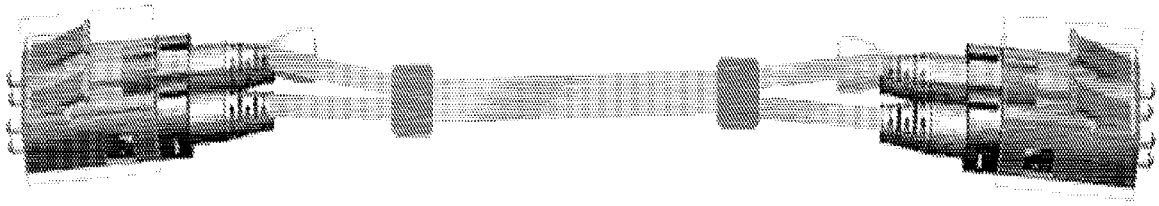

FIG. 62A

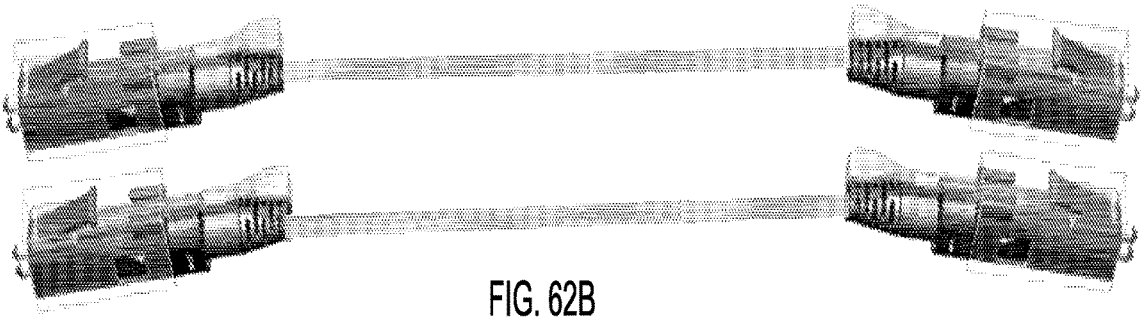

FIG. 62B

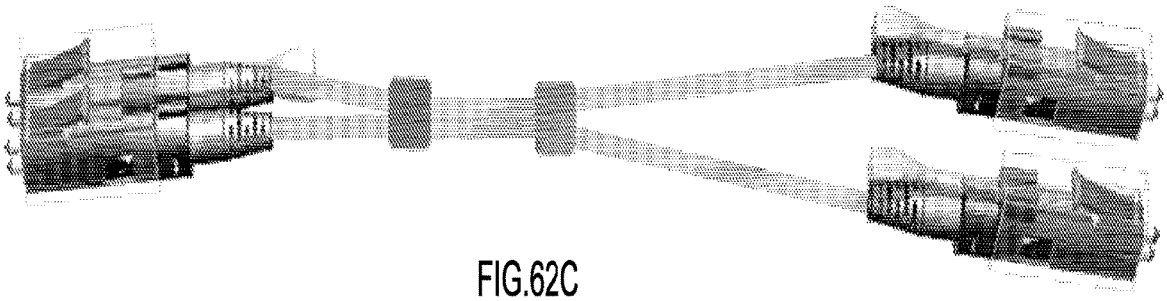

FIG.62C

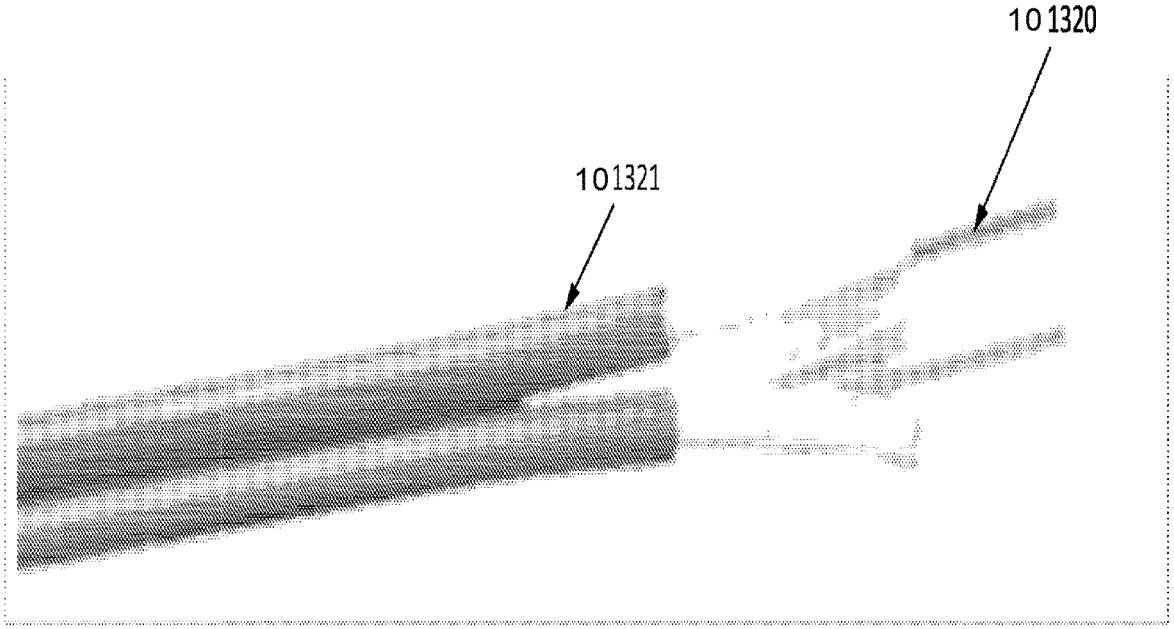

FIG. 63A

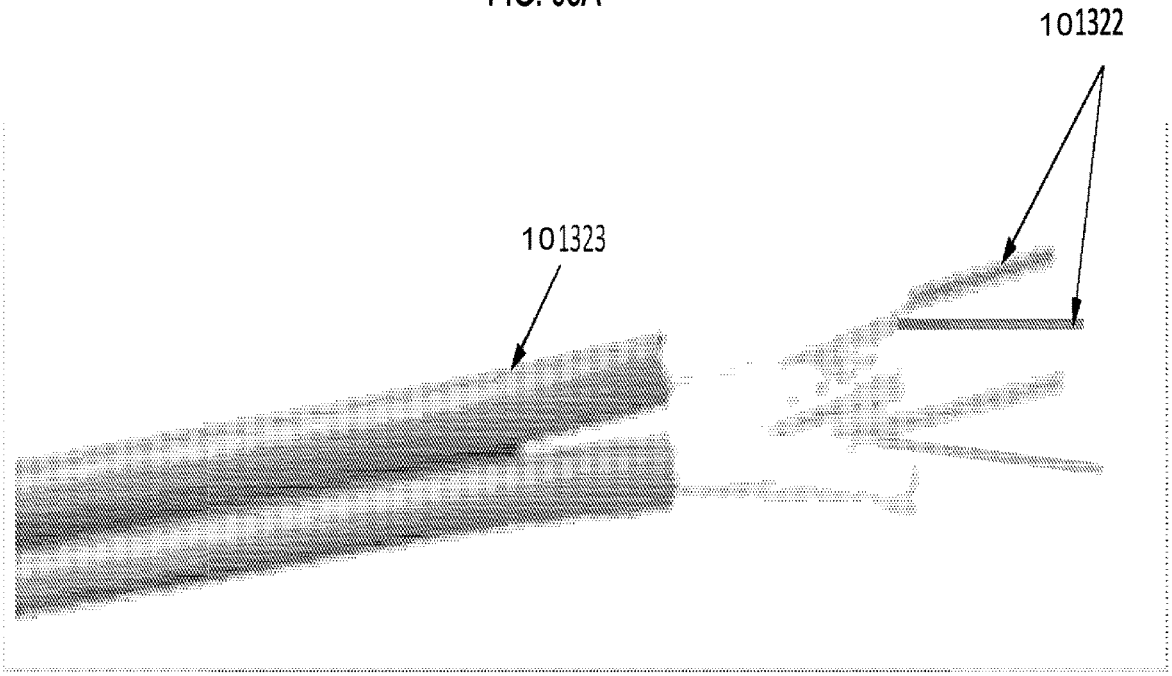

FIG. 63B

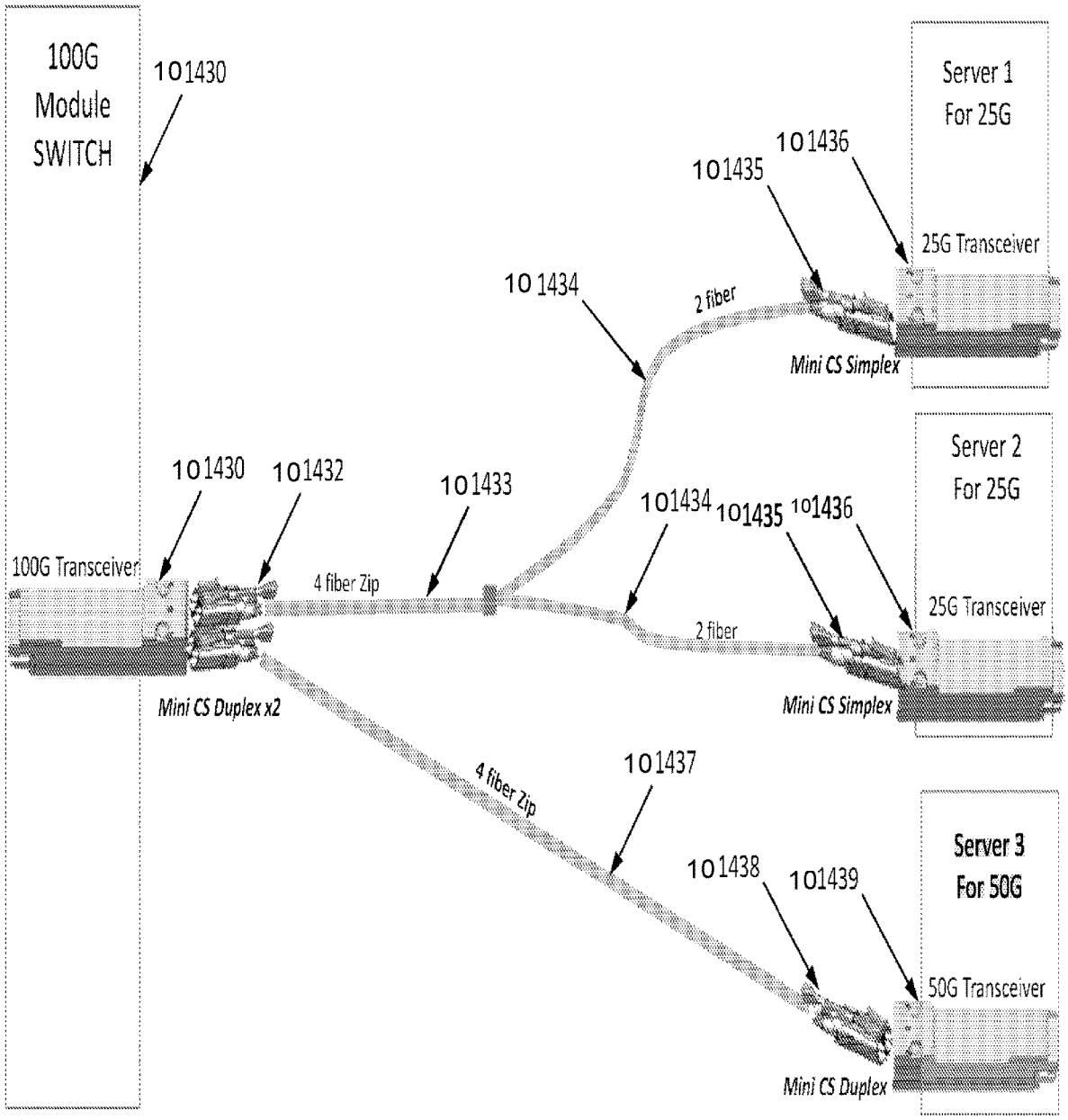
100G
Module
SWITCH
101430
Server 1
For 25G
101436
101435
25G Transceiver
101434
2 fiber
Mini CS Simplex
Server 2
For 25G
101430
101432
101433
101434
101435
101436
100G Transceiver
4 fiber Zip
25G Transceiver
2 fiber
Mini CS Duplex x2
Mini CS Simplex
101437
4 fiber Zip
Server 3
For 50G
101438
101439
50G Transceiver
Mini CS Duplex

FIG. 64

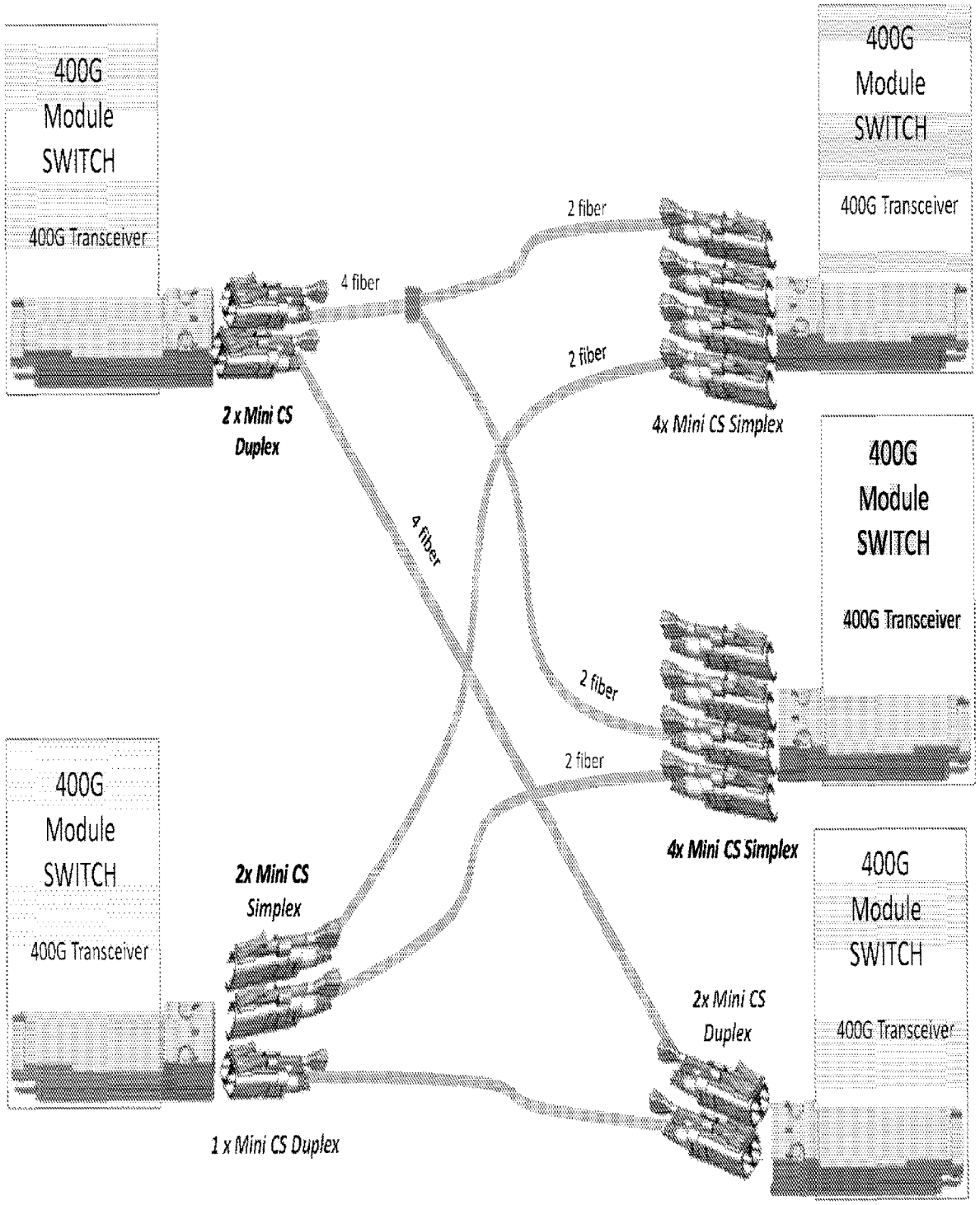
400G
Module
SWITCH
400G Transceiver
400G
Module
SWITCH
400G Transceiver
2 fiber
4 fiber
2 fiber
2 x Mini CS
Duplex
4x Mini CS Simplex
400G
Module
SWITCH
400G Transceiver
4 fiber
2 fiber
2 fiber
400G
Module
SWITCH
400G Transceiver
4x Mini CS Simplex
2x Mini CS
Simplex
400G
Module
SWITCH
400G Transceiver
2x Mini CS
Duplex
1 x Mini CS Duplex

FIG. 65

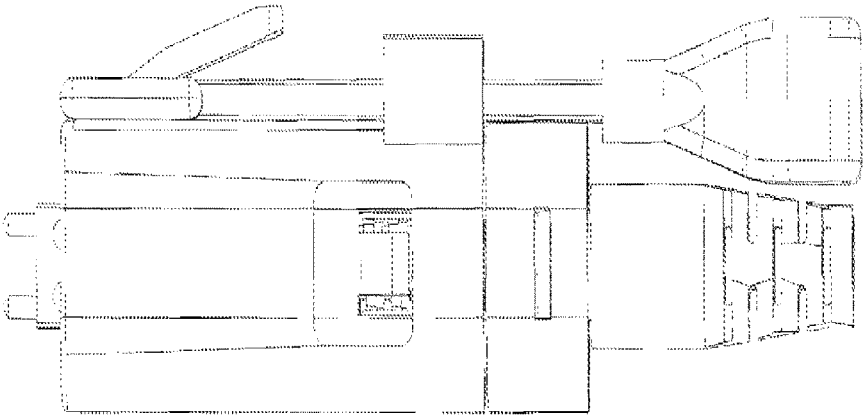

FIG. 66A

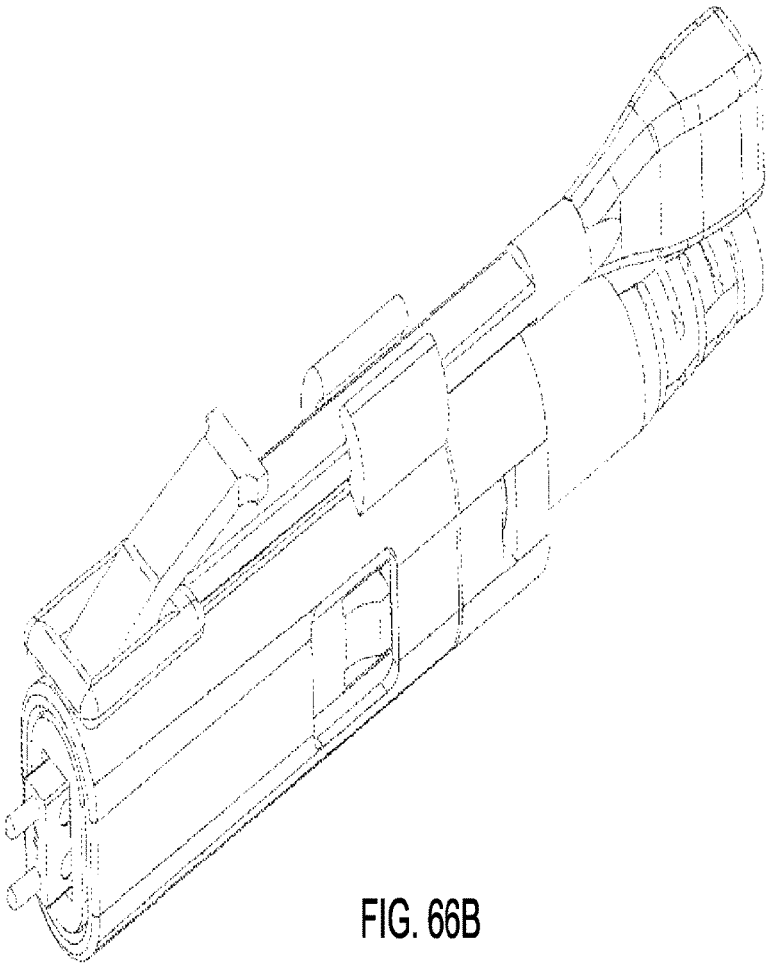

FIG. 66B

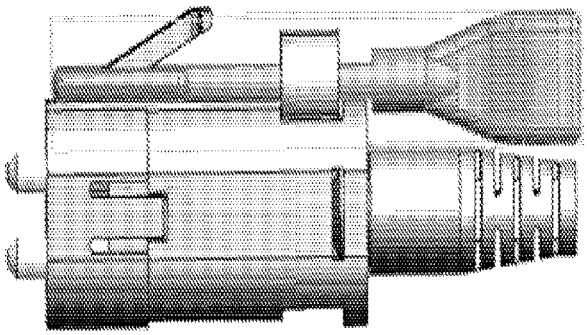

FIG. 67A

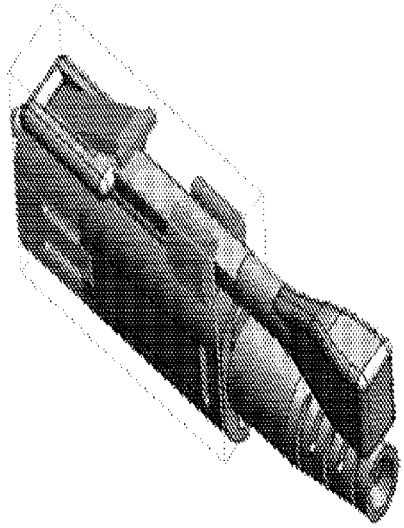

FIG. 67B

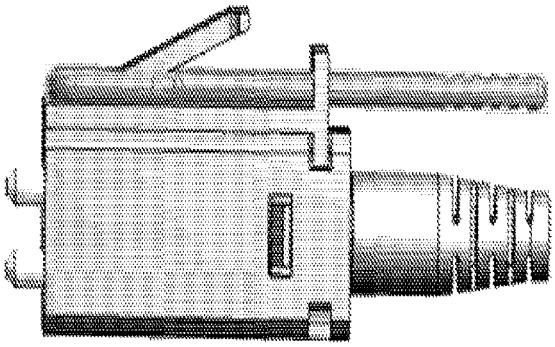

FIG. 67C

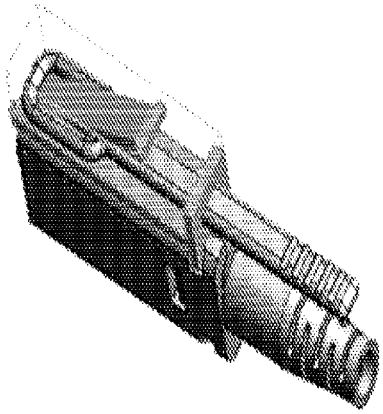

FIG. 67D

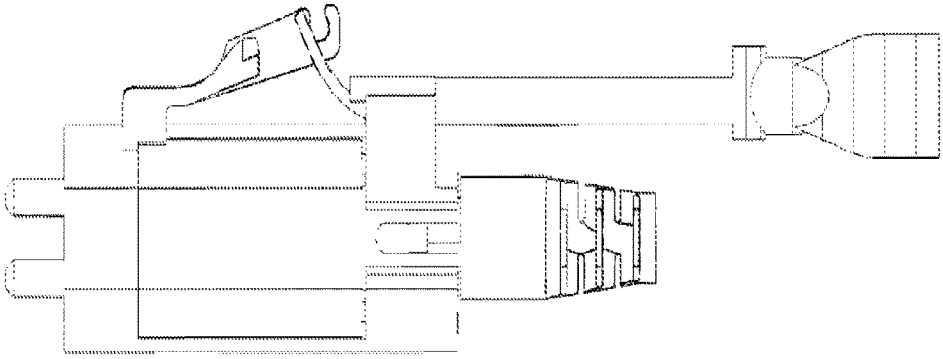

FIG. 68A

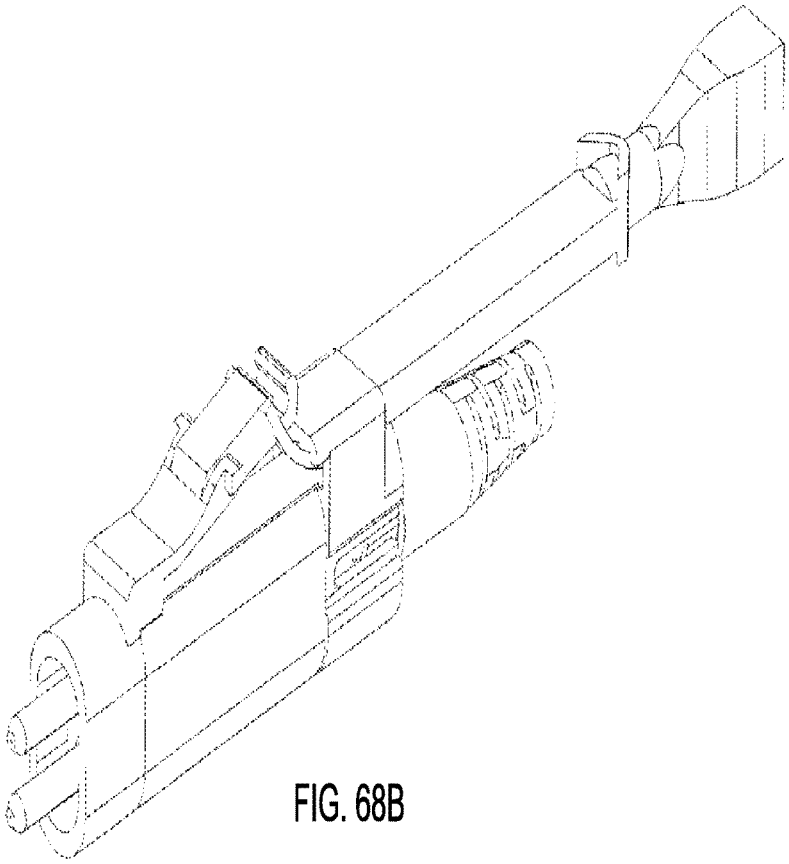

FIG. 68B

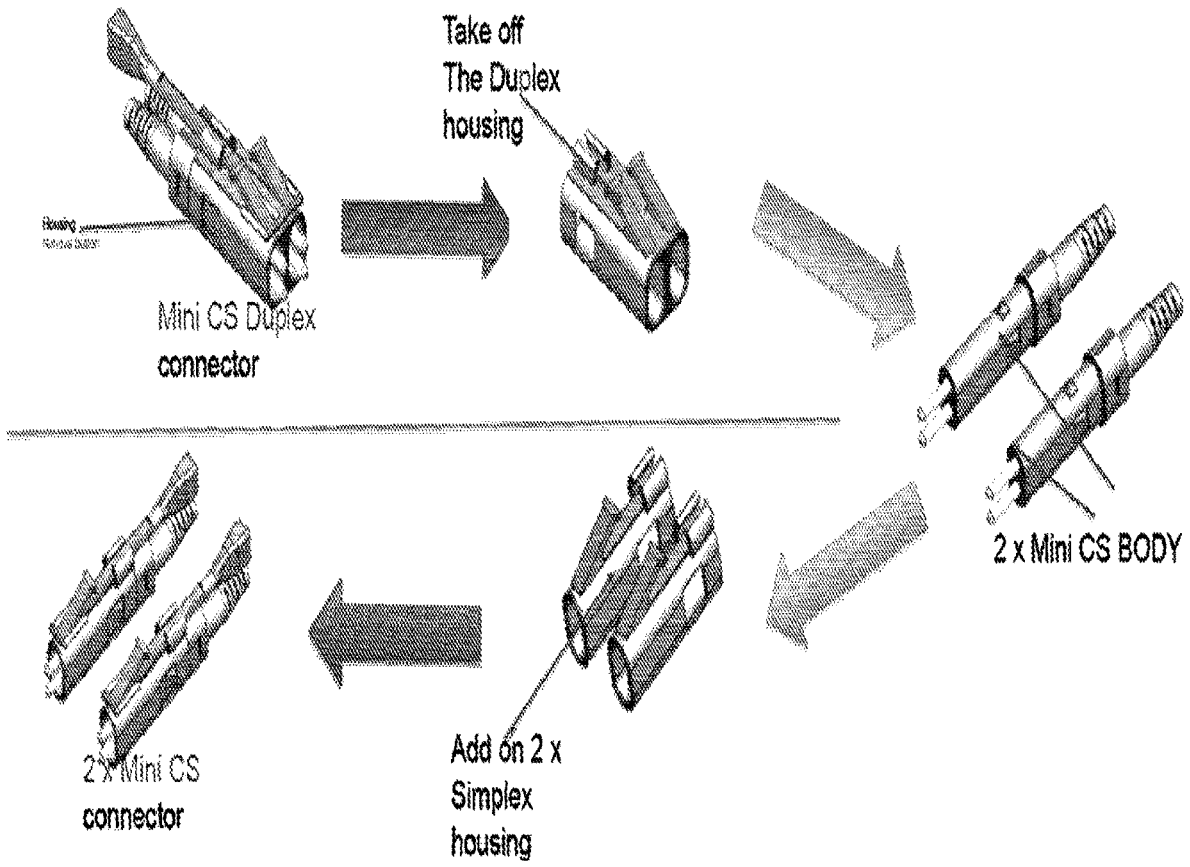
Take off
The Duplex
housing
Mini CS Duplex
connector
2 x Mini CS BODY
2 x Mini CS
connector
Add on 2 x
Simplex
housing

FIG. 69

ULTRA-SMALL FORM FACTOR OPTICAL CONNECTORS USED AS PART OF A RECONFIGURABLE OUTER HOUSING

CROSS-REFERENCE TO RELATED APPLICATIONS

This application claims priority as continuation of U.S. patent application Ser. No. 17/327,197 filed on May 21, 1921 entitled "ULTRA-SMALL FORM FACTOR OPTICAL CONNECTORS USED AS PART OF A RECONFIGURABLE OUTER HOUSING" which is a continuation of Ser. No. 17/090,855 filed Nov. 5, 1920 entitled "ULTRA-SMALL FORM FACTOR OPTICAL CONNECTORS USED AS A PART OF A RECONFIGURABLE OUTER HOUSING" which is a continuation of U.S. patent application Ser. No. 16/414,546 filed May 16, 2019 entitled "ULTRA-SMALL FORM FACTOR OPTICAL CONNECTORS USED AS PART OF A RECONFIGURABLE OUTER HOUSING" which is a continuation of U.S. patent application Ser. No. 16/388,053 filed Apr. 18, 2019 entitled "Ultra-Small Form Factor Optical Connectors", which is a continuation of U.S. patent application Ser. No. 16/035,691, filed Jul. 15, 2018 entitled "Ultra-Small Form Factor Optical Connectors" now U.S. Pat. No. 10,281,668 granted May 7, 2019, which claims priority to the following: U.S. Provisional Patent Application Ser. Nos. 62/532,710 filed Jul. 14, 2017, 62/549,655 filed Aug. 24, 2017, and 62/588,276 filed Nov. 17, 2017, all the disclosures of which are incorporated by reference herein.

FIELD OF THE INVENTION

The present disclosure relates generally to ultra-small form factor optical connectors and related connections within adapters and optical transceivers.

BACKGROUND

The prevalence of the Internet has led to unprecedented growth in communication networks. Consumer demand for service and increased competition has caused network providers to continuously find ways to improve quality of service while reducing cost.

Certain solutions have included deployment of high-density interconnect panels. High-density interconnect panels may be designed to consolidate the increasing volume of interconnections necessary to support the fast-growing networks into a compacted form factor, thereby increasing quality of service and decreasing costs such as floor space and support overhead. However, room for improvement in the area of data centers, specifically as it relates to fiber optic connections, still exists. For example, manufacturers of connectors and adapters are always looking to reduce the size of the devices, while increasing ease of deployment, robustness, and modifiability after deployment. In particular, more optical connectors may need to be accommodated in the same footprint previously used for a smaller number of connectors in order to provide backward compatibility with existing data center equipment. For example, one current footprint is known as the small form-factor pluggable transceiver footprint (SFP). This footprint currently accommodates two LC-type ferrule optical connections. However, it may be desirable to accommodate four optical connections (two duplex connections of transmit/receive) within the same footprint. Another current footprint is the quad small form-factor pluggable (QSFP) transceiver footprint. This footprint currently accommodates four LC-type ferrule optical connections. However, it may be desirable to accommodate eight optical connections of LC-type ferrules (four duplex connections of transmit/receive) within the same footprint.

In communication networks, such as data centers and switching networks, numerous interconnections between mating connectors may be compacted into high-density panels. Panel and connector producers may optimize for such high densities by shrinking the connector size and/or the spacing between adjacent connectors on the panel. While both approaches may be effective to increase the panel connector density, shrinking the connector size and/or spacing may also increase the support cost and diminish the quality of service.

In a high-density panel configuration, adjacent connectors and cable assemblies may obstruct access to the individual release mechanisms. Such physical obstructions may impede the ability of an operator to minimize the stresses applied to the cables and the connectors. For example, these stresses may be applied when the user reaches into a dense group of connectors and pushes aside surrounding optical fibers and connectors to access an individual connector release mechanism with his/her thumb and forefinger. Overstressing the cables and connectors may produce latent defects, compromise the integrity and/or reliability of the terminations, and potentially cause serious disruptions to network performance.

While an operator may attempt to use a tool, such as a screwdriver, to reach into a dense group of connectors and activate a release mechanism, adjacent cables and connectors may obstruct the operator's line of sight, making it difficult to guide the tool to the release mechanism without pushing aside the adjacent cables. Moreover, even when the operator has a clear line of sight, guiding the tool to the release mechanism may be a time-consuming process. Thus, using a tool may not be effective at reducing support time and increasing the quality of service.

SUMMARY OF THE INVENTION

An optical connector holding two or more LC-type optical ferrules is provided. The optical connector includes an outer body, an inner front body accommodating the two or more LC-type optical ferrules, ferrule springs for urging the optical ferrules towards a mating receptacle, and a back body for supporting the ferrule springs. The outer body and the inner front body are configured such that four LC-type optical ferrules are accommodated in a small form-factor pluggable (SFP) transceiver footprint or eight LC-type optical ferrules are accommodated in a quad small form-factor pluggable (QSFP) transceiver footprint. A mating receptacle (transceiver or adapter) includes a receptacle hook and a housing with an opening that accommodates the receptacle hook in a flexed position as the optical connector makes connection with the mating receptacle by introducing the receptacle hook into an optical receptacle hook recess.

BRIEF DESCRIPTION OF THE DRAWINGS

FIG. **1**A is a perspective view of a prior art standard 6.25 mm pitch LC connector SFP;

FIG. **1**B is a perspective view of a prior art standard 6.25 mm pitch LC adapter;

FIG. **1**C is a top view of the prior art adapter of FIG. **1**B;

FIG. **1**D is a front view of the prior art adapter of FIG. **1**B, showing the 6.25 mm pitch;

FIG. **2**A is a perspective view of a prior art LC duplex connector;

FIG. **2**B is a perspective view of a prior art LC duplex connector with a remote release pull tab;

FIG. **2**C is a top view of a prior art LC connector used in the embodiments shown in FIGS. **2**A and **2**B;

FIG. **2**D is a side view of the prior art LC connector of FIG. **2**C;

FIG. **3** is an exploded view of one embodiment of a connector;

FIG. **4** is a perspective view of one embodiment of a connector;

FIG. **5** is a perspective view of one embodiment of a connector with the outer housing removed from the front body.

FIG. **6** is a perspective view of one embodiment of a duplex connector;

FIG. **7** is a perspective view of another embodiment of a duplex connector;

FIG. **8** is a perspective view of one embodiment of a quad connector;

FIG. **9** is another perspective view of one embodiment of a quad connector;

FIG. **10** shows various embodiments of adapter types;

FIG. **11**A is a side view of a connector connected to an adapter;

FIG. **11**B is a side view of a connector being removed from an adapter;

FIG. **12**A is a side view of the outer housing of a connector being removed;

FIG. **12**B is a perspective view of a transparent outer housing of a connector showing the front body;

FIG. **13** is a perspective view of one embodiment of a quad connector inserted into a corresponding adapter;

FIGS. **14**A-C are illustrative examples of cable management using various embodiments of connectors;

FIG. **15**A-B are illustrative examples of cable management using multiple fiber strands per jacket;

FIG. **16** is an illustrative example of using a cable management system using multiple fiber strands per jacket.

FIG. **17** is another illustrative example of using a cable management system using multiple fiber strands per jacket.

FIGS. **18**A-B are various views of one embodiment of a MT connector.

FIGS. **19**A-D are illustrative examples of possible alternative connector designs.

FIG. **20** shows moving two connectors from a duplex connector to two simplex connectors.

FIG. **21**A is an exploded view of a micro optical connector according to an embodiment.

FIG. **21**B is a perspective view of the assembled micro optical connector of FIG. **21**A.

FIG. **22** is a front view of the micro optical connector of FIG. **21**B showing overall connector dimensions and ferrule pitch.

FIG. **23**A is a cross-sectional view of the micro optical connector of FIG. **21**B latched into the adapter of FIG. **24**.

FIG. **23**B is a cross-sectional view of the micro optical connectors of FIG. **21**B unlatched from the adapter of FIG. **24**.

FIG. **24** is an exploded view of an adapter for the micro optical connectors of FIG. **21**B.

FIG. **25**A is a cross-sectional view of the adapter of FIG. **24**, assembled.

FIG. **25**B is a cross-sectional side view of the adapter housing of FIG. **24**.

FIG. **26** is a front view of the assembled adapter of FIG. **24**.

FIG. **27**A is an isometric view of the front body of the micro optical connector of FIG. **21**A.

FIG. **27**B is a right side view of the front body of FIG. **27**A.

FIG. **28**A is an isometric view of the back body of the micro optical connector of FIG. **21**A.

FIG. **28**B is a side view of the back body of FIG. **28**A.

FIG. **29**A is an isometric view of the outer housing of the micro optical connector of FIG. **21**A.

FIG. **29**B is a front view of the outer housing of FIG. **29**A.

FIG. **29**C is a cross-sectional view of the outer housing of FIG. **29**A showing the top of an orientation protrusion.

FIG. **29**D is an inner view of the outer housing of FIG. **29**A;

FIG. **29**E is an inner view of the outer housing of FIG. **29**A.

FIG. **30** is a side view of an adapter hook of the adapter of FIG. **24**.

FIG. **31** is an isometric view of the adapter of FIG. **24** assembled with the micro optical connectors of FIG. **21**B.

FIG. **32**A is cross-sectional view of a prior art connector showing a latch gap.

FIG. **32**B is a cross-sectional view of the micro optical connector of FIG. **21**B latched (left) and unlatched (right) within the adapter of FIG. **24**, assembled.

FIG. **33**A depicts the micro optical connector of FIG. **21**B in a QSFP footprint, depicting dimensions in millimeters.

FIG. **33**B depicts the micro optical connectors of FIG. **21**B in an SFP footprint, depicting dimensions in millimeters.

FIG. **34**A-**34**C depicts adapter hooks interacting with the micro optical connectors of FIG. **21**B before (FIG. **34**A), during (FIG. **34**B), and after (FIG. **34**C) latching.

FIG. **35**A-FIG. **35**C depicts the micro optical connector of FIG. **21**B side flap operation before (FIG. **35**A), during (FIG. **35**B), and after (FIG. **35**C) latching.

FIG. **36**A depicts plural micro optical connectors in a transceiver.

FIG. **36**B is a front view of the transceiver of FIG. **36**A.

FIG. **37** is an exploded view of a micro optical connector according to a further embodiment.

FIG. **38** is an isometric view of a front body of the micro optical connector of FIG. **37**.

FIG. **39** is an isometric view of a back body of the micro optical connector of FIG. **37**.

FIGS. **40**A, **40**B, and **40**C depict a technique for reversing polarity of the optical connector of FIG. **37**.

FIG. **41** is an exploded view of a micro optical connector according to a further embodiment.

FIG. **42**A is an isometric view of the front body of the micro optical connector of FIG. **41**.

FIG. **42**B is a side view of the front body of FIG. **42**A.

FIG. **43** is an isometric view of the back body of the micro optical connector of FIG. **41**.

FIGS. **44**A, **44**B, and **44**C are isometric views of the outer housings that may be used with any of the micro optical connectors of FIGS. **21**A, **37**, and **41**.

FIG. **45** is an exploded view of an adapter according to a further embodiment.

FIG. **46** is a cross-section of the adapter of FIG. **45**, assembled.

FIG. **47** is an exploded view of a connector according to another embodiment.

FIG. **48** is an isometric view of the back body and the back post of the connector of FIG. **47**.

FIG. **49** is a cross-section of the back post of FIG. **47** assembled with optical fibers.

FIG. **50** is a front view of the connector of FIG. **47**.

FIG. **51** is an isometric view of the boot of the connector of FIG. **47**.

FIG. **52** is a front view of the adapter of FIG. **45**.

FIG. **53** is a exploded view of one embodiment of a connector;

FIG. **54** is a perspective view of one embodiment of a connector;

FIG. **55** is a perspective view of one embodiment of a connector with the outer housing removed from the front body

FIG. **56** is a perspective view of one embodiment of a duplex connector;

FIG. **57** is a perspective view of another embodiment of a duplex connector;

FIG. **58** is a perspective of one embodiment of a quad connector;

FIG. **59** is a perspective of another embodiment of a quad connector;

FIG. **60** is a perspective of another embodiment of a quad connector;

FIG. **61** is a perspective of one embodiment of a quad connector inserted into a corresponding adapter;

FIGS. **62**A-C are illustrative examples of cable management using various embodiments of connectors;

FIG. **63**A-B are illustrative examples of cable management using multiple fiber strands per jacket;

FIG. **64** is an illustrative example of using a cable management system using multiple fiber strands per jacket.

FIG. **65** is another illustrative example of using a cable management system using multiple fiber strands per jacket;

FIG. **66**A-B are various views of one embodiment of a MT connector.

FIGS. **67** A-D are illustrative examples of possible alternative connector designs.

FIGS. **68**A-B are illustrative examples of additional possible alternative connector designs.

FIG. **69** is an illustrative example of a method of switching modes of operation of one or more connectors.

DETAILED DESCRIPTION

This disclosure is not limited to the particular systems, devices and methods described, as these may vary. The terminology used in the description is for the purpose of describing the particular versions or embodiments only, and is not intended to limit the scope.

As used in this document, the singular forms "a," "an," and "the" include plural references unless the context clearly dictates otherwise. Unless defined otherwise, all technical and scientific terms used herein have the same meanings as commonly understood by one of ordinary skill in the art. Nothing in this disclosure is to be construed as an admission that the embodiments described in this disclosure are not entitled to antedate such disclosure by virtue of prior invention. As used in this document, the term "comprising" means "including, but not limited to."

The following terms shall have, for the purposes of this application, the respective meanings set forth below.

A connector, as used herein, refers to a device and/or components thereof that connects a first module or cable to a second module or cable. The connector may be configured for fiber optic transmission or electrical signal transmission. The connector may be any suitable type now known or later developed, such as, for example, a ferrule connector (FC), a fiber distributed data interface (FDDI) connector, an LC connector, a mechanical transfer (MT) connector, a square connector (SC) connector, a CS connector, or a straight tip (ST) connector. The connector may generally be defined by a connector housing body. In some embodiments, the housing body may incorporate any or all of the components described herein.

A "fiber optic cable" or an "optical cable" refers to a cable containing one or more optical fibers for conducting optical signals in beams of light. The optical fibers can be constructed from any suitable transparent material, including glass, fiberglass, and plastic. The cable can include a jacket or sheathing material surrounding the optical fibers. In addition, the cable can be connected to a connector on one end or on both ends of the cable.

Various embodiments described herein generally provide a remote release mechanism such that a user can remove cable assembly connectors that are closely spaced together on a high density panel without damaging surrounding connectors, accidentally disconnecting surrounding connectors, disrupting transmissions through surrounding connectors, and/or the like. Various embodiments also provide narrow-pitch LC duplex connectors and narrow-width multi-fiber connectors, for use, for example, with future narrow-pitch LC SFPs and future narrow width SFPs. The remote release mechanisms allow use of the narrow-pitch LC duplex connectors and narrow-width multi-fiber connectors in dense arrays of narrow-pitch LC SFPs and narrow-width multi-fiber SFPs.

FIG. **1**A shows a perspective view of a prior art standard 6.25 mm pitch LC connector SFP **100**. The SFP **100** is configured to receive a duplex connector and provides two receptacles **102**, each for receiving a respective LC connector. The pitch **104** is defined as the axis-to-axis distance between the central longitudinal axes of each of the two receptacles **102**. FIG. **1**B shows a perspective view of a prior art standard 6.25 mm pitch LC adapter **106**. The adapter **106** is also configured to receive a duplex connector, and provides two receptacles **108**, each for receiving a respective LC connector. FIG. **1**C is a top view of the adapter **106** of FIG. **1**B. The pitch of the adapter **106** is defined similarly to that of the SFP **100**, as the axis-to-axis distance between the central longitudinal axes of each of the two receptacles **108**, as illustrated in FIG. **1**D, which shows a front view of the adapter **106**.

FIG. **2**A shows a prior art LC duplex connector **200** that may be used with the conventional SFP **100** and the conventional adapter **106**. The LC duplex connector **200** includes two conventional LC connectors **202**. FIG. **2**B shows another prior art LC duplex connector **204** having a remote release pull tab **206**, and including two conventional LC connectors **208**. As shown, the remote release pull tab includes two prongs **210**, each configured to couple to the extending member **212** of a respective LC connector **208**. FIGS. **2**C and **2**D show top and side views, respectively, of the conventional LC connector **208**, having a width of 5.6 mm, and further showing the extending member **212**.

As discussed herein, current connectors may be improved by various means, such as, for example, reducing the footprint, increasing the structural strength, enabling polarity changes, etc. Various embodiments disclosed herein offer improvements over the current state of the art, as will be further discussed below.

In some embodiments, as shown in FIG. **3**, a connector **300** may comprise various components. Referring to FIG. **3**, an illustrative embodiment of a connector **300** is shown in an exploded view to display detail. In some embodiments, and

as discussed further herein, a connector **300** may have an outer housing **301**, a front body **302**, one or more ferrules **303**, one or more ferrule flanges **304**, one or more springs **305**, a back body **306**, a back post **307**, a crimp ring **308**, and a boot **309**. In some embodiments, the back body **306** may comprise one or more protrusions **306.1** which may interlock with a window/cutout **302.1** in the front body **302**. This may allow for the back body **306** and the front body **302** to be securely fastened together around the ferrule(s) **303**, ferrule flange(s) **304**, and the spring(s) **305**. The elements of FIG. **3** are configured such that two optical connectors having four LC-type optical ferrules may be accommodated in a small form-factor pluggable (SFP) transceiver footprint or at least two optical connectors having a total of eight LC-type optical ferrules may be accommodated in a quad small form-factor pluggable (QSFP) transceiver footprint.

Referring now to FIG. **4**, an embodiment is shown wherein the connector **400** is assembled. In some embodiments, the assembled connector may have an outer housing **401**, a front body **402** positioned within the outer housing, one or more ferrules **403**, one or more ferrule flanges (not shown), one or more springs (not shown), a back body **406**, a back post (not shown), a crimp ring (not shown), a boot **409**, and a push-pull tab **410**. In some embodiments, the connector may have one or more latching mechanisms made up of a window **412** on the outer housing **401** near the push-pull tab **410** and a protrusion **413** on the front body. The latching mechanism made up of the window **412** and protrusion **413** securely attaches the outer housing **401** to the front body **402**. In a further embodiment, the outer housing **401** may have a recess **411** to receive a locking tab or locking mechanism from an adapter (depicted in FIG. **13**, below). The recess **411** of the outer housing **401** is used to interlock with an adapter (depicted in FIG. **13**, below) or transceiver receptacle to secure the connector into the adapter. As would be understood by one skilled in the art, the push-pull tab **410** enables removal of the connector from a receptacle without requiring additional tools. Alternatively, the push-pull tab may be eliminated and the connector removed manually. In one or more further embodiments, the outer housing **401** may also have a key **414**. The key **414** may keep the connector in a given orientation when inserted into a receptacle such as an adapter or transceiver.

FIG. **5** depicts a procedure for changing the polarity of the optical connectors of the present disclosure. As shown in FIG. **5**, in some embodiments, the latching mechanism of the connector **500** may be made up of two main parts: a window (not visible) and one or more protrusions **513**. As illustrated in FIG. **5**, the outer housing **501** can slide on to or be removed from the front body **502** by disengaging the latching mechanisms formed by the protrusion **513** exiting through the window, whereby it contacts a rear wall of the window (refer to FIG. **4** for an illustrated example of the outer housing being attached to the front body via the latching mechanism). In some embodiments, the push-pull tab **510** may be permanently attached to the outer housing **501**, as shown.

The front body **502** may be removed from the outer housing **501**, rotated 180° as indicated by arrow **520**, and re-inserted into the outer housing. This allows for a change in the polarity of the front body **502**, as shown by the arrow diagram in FIG. **5**, and therefore the ferrules can switch quickly and easily without unnecessarily risking the delicate fiber cables and ferrules.

In some embodiments, it may be beneficial to connect two or more connectors together to increase structural integrity, reduce the overall footprint, and cut manufacturing costs. Accordingly, as shown in FIG. **6**, a connector **600** may in some embodiments, utilize an outer housing **601** that is capable of holding two front bodies **602**. Various other embodiments are disclosed herein, and it should be noted that the embodiments disclosed herein are all non-limiting examples shown for explanatory purposes only.

Accordingly, although the embodiment shown in FIG. **6** utilizes a duplex outer housing **601**, additional or alternative embodiments may exist with more capacity, for example, six or eight optical connectors within a single outer housing. As shown in FIG. **6**, in some embodiments, the outer housing **601** may accept two front bodies **602**, each with two separate ferrules **603**. As shown, the front body(s) **602** may securely fasten to the outer housing **601** via the latching mechanism **612** and **613**. In additional embodiments, the push-pull tab **610** may be modified, as shown, such that a single tab can be used to free the two or more connectors from an adapter. As illustrated in FIG. **6**, the uni-body push-pull tab **610** and the outer housing **601** may have two windows **612** with which to receive multiple protrusions **613** of the front body(s) **602**. As discussed herein the recesses **611** of the outer housing **601** are used to secure the connectors to an adapter (depicted in FIG. **13** below). In one or more further embodiments, the connectors may have individual back bodies **606** and boots **609** (i.e., one back body/boot per front body) as shown.

Alternatively, in some embodiments, such as that shown in FIG. **7**, the connector **700** may have a single boot **709** and a duplex (i.e., uni-body) back body **706** instead of individual back bodies (e.g., such as shown in FIG. **6**). In some embodiments, the duplex back body **706** may have different dimensions than that of the individual back bodies of FIG. **6**, such as, for example, they may be longer to accommodate the need for routing the fiber after it exits the boot **709**. As with other embodiments discussed herein, the connector shown in FIG. **7** may also include an outer housing (e.g., duplex outer housing) **701**, one or more ferrules **703**, at least one latching mechanism formed by the protrusion (not shown) exiting through one or more windows **712**, and a push-pull tab **710**.

As stated, it may be beneficial to connect two or more connectors together to increase structural integrity, reduce the overall footprint, and cut manufacturing costs. Accordingly, similar to FIG. **6**, FIG. **8** shows a connector **800** that may, in some embodiments, utilize an outer housing **801** that is capable of holding multiple (e.g., four) front bodies **802**.

As shown in FIG. **8**, some embodiments may have an outer housing **801** able to accept up to four front bodies **802**, each with one or more ferrules **803**. As shown, each front body **802** may securely fasten to the outer housing **801** via the latching mechanism **812** and **813**. In additional embodiments, the push-pull tab **810** may be modified such that a single tab can be used to remove the up to four connectors from an adapter. As illustrated in FIG. **8**, the push-pull tab **810** may include four recesses **811**, which as discussed herein are used to secure the connector to a receptacle such as an adapter (shown in FIG. **13**, below) or the front receptacle portion of a transceiver. In one or more further embodiments, the connectors may have individual back bodies **806** and boots **809** (i.e., one back body/boot per front body) as shown.

Similar to FIG. **8**, FIG. **9** shows an embodiment where the outer housing **901** is able to accept up to four front bodies **902**, each with one or more ferrules **903**. As shown, each front body **902** may securely fasten to the outer housing **901** via the latching mechanism **912** and **913**. In additional embodiments, the push-pull tab **910** may be modified such

that a single tab can be used to remove the up to four CS connectors from an adapter. As illustrated in FIG. **9**, the push-pull tab **910** may include four recesses **911**, which as discussed herein are used to secure the connector to an adapter (shown in FIG. **13**, below) or the optical receptacle portion of a transceiver. The FIG. **9** embodiment may utilize a single back body **906** and a single boot **909**. In one or more further embodiments, the connectors may have individual back bodies **906** and boots **909** (i.e., one back body/boot for all four front bodies) as shown.

In another aspect, the present disclosure provides method for reconfiguring optical cables in which the outer housings of the connectors may be removed and the remaining portion of the assembled connector is inserted into a housing having a larger or smaller capacity.

For example, the outer housings of plural two-ferrule capacity housings may be removed and the connector inner body and associated components inserted into a second outer housing that has either a four-ferrule or eight-ferrule capacity. Alternatively, an outer housing with a four-ferrule capacity may be removed and the inner bodies and associated components are inserted into two second outer housings, each of the two second housings having a two-ferrule capacity. Similarly, an outer housing with an eight-ferrule capacity may be removed and replaced by two four-ferrule capacity housing or a four-ferrule capacity and two two-ferrule capacity housings. In this manner, cables may be flexibly reconfigured to match the capacity of a mating optical-electrical component such as a transceiver. This aspect of the present disclosure is demonstrated in connection with FIG. **10**.

Referring now to FIG. **10**, various embodiments may exist such as a single housing **1001** which receives a single connector **1002**. Additional embodiments may also exist, such as a duplex housing **1003** which receives two connectors **1004** and/or a quad housing **1005** which may receive up to four connectors **1006**. It should be understood by one skilled in the art that various other embodiments may exist that are not explicitly shown. For example, a housing with the capacity for 5, 6, 7, 8, 9, 10 or more connectors may be utilized for various embodiments disclosed herein. As shown below, it is desirable to have flexible housing configurations so that connectors may be grouped and ungrouped between optical and optoelectronic components such as adapters and transceivers.

Alternatively, in some embodiments the connector may utilize one or more duplex back bodies with a single boot, similar to that shown in FIG. **7**. Thus, similar to FIG. **7**, an embodiment may allow for a further reduced footprint, less cabling, and easier maintenance of the connector. Accordingly, one or more embodiments may have an outer housing that may accept up to four front bodies, each with one or more ferrules. In some embodiments, each front body may securely fasten to the outer housing via a latching mechanism. In additional embodiments, the push-pull tab may be modified such that a single tab can be used to free the up to four front bodies from an adapter. The push-pull tab may include four openings with which to receive multiple locking tabs of the outer housing. As discussed herein the locking tabs of the outer housing are used to secure the connectors to an adapter (shown in FIG. **13**) or the optical receptacle portion of a transceiver.

In further embodiments, the connector may utilize a single uni-body back body with a single boot (i.e., as shown in FIG. **9**). Thus, an embodiment may allow for a further reduced foot print, less cabling, and easier maintenance of the connector. Accordingly, one or more embodiments may have an outer housing that may accept up to four front bodies, each with one or more ferrules. Each front body may securely fasten to the outer housing via the latching mechanism as discussed herein. In additional embodiments, the push-pull tab may be modified such that a single tab can be used to remove up to four connectors from an adapter. The push-pull tab may include four openings with which to receive multiple locking tabs of the outer housing. As discussed herein the locking tabs of the outer housing are used to secure the connectors to an adapter.

The optical connectors of the present disclosure are all configured to be received in a receptacle. As used herein, the term "receptacle" relates generically to a housing that receives an optical connector. A receptacle includes both optical adapters, that is, components that mate two or more optical connectors, and transceivers, which include an optical receptacle to hold connectors that are to communicate with an optoelectronic component (e.g., a component that converts optical signals to electrical signals). As shown in FIG. **11**A, in one embodiment **1100**A, the outer housing **1101** may comprise one or more recesses **1111**. As discussed and shown herein, the one or more recesses may allow for a receptacle **1114** to securely connect to the connector **1100**A. Accordingly, in some embodiments, the receptacle **1114** may have a receptacle hook **1115**, which is flexible and can secure the connector **1100**A into the receptacle via latching onto the wall of the recess **1111**, as shown. This latching takes place when the outer housing **1101** is pushed forward into the receptacle. The sloped portions of the outer housing **1101** allow the receptacle hook **1115** to slide up and over the front of the outer housing thereby securing the connector **1100**A into the receptacle.

Additionally or alternatively, in some embodiments, such as that shown in FIG. **11**B, a connector **1100**B may be removed from a receptacle **1114** by pulling the connector away from the adapter as indicated by the directional arrow. In some embodiments, the force may be applied by a user via the push-pull tab **1110**. Alternatively, when a push-pull tab is not present, the connector may still be manually removed from a receptacle. As shown in FIG. **11**B, as the connector **1100**B is removed from the receptacle **1114**, the flexible receptacle hooks **1115** separate and slide up the slope of the end of the connector and allow for removal of the connector from the receptacle.

Referring now to FIGS. **12**A and **12**B, as discussed herein and previously shown in FIG. **5**, the front body **1202** can be removed from the outer housing **1201**. In some embodiments, a portion of the outer body **1201** can be flexibly extended away from the front body **1202** as shown by the arrows in FIG. **12**A. As discussed herein, in some embodiments, the front body **1202** may comprise a protrusion **1213** which interlocks with a window (not shown) on the outer housing **1201**. Accordingly, when force is applied to the outer housing **1201** in a manner that removes the one or more protrusions **1213** from the one or more windows (not shown, see FIG. **4**), the front body **1202** may be removed from the outer housing.

Referring now to FIG. **13**, an embodiment **1300** is shown in which the connector (not shown in its entirety) is inserted into a receptacle such as adapter **1314**. In this specific non-limiting example, the connector is similar to that shown in FIG. **8** (i.e., comprising four front bodies each with their own back body **1306** and boot **1309**). However, unlike FIG. **8**, the embodiment shown here utilizes four individual push-pull tabs **1310** instead of a duplex push-pull tab system which manipulates two latching tabs per push-pull tab to allow the connector to be removed from the adapter **1314**.

Various benefits and details have been discussed herein with regard to the connectors and their modular ability (e.g., to include multiple connectors into a single housing). In addition to the reduced footprint, structural improvements, and cost reduction, various embodiments herein may also be beneficial with regard to reducing the burden of cabling in a data center environment. Illustrative embodiments shown in FIGS. **14**A through **14**C depict cable configurations that may be used to reduce the complexity of optical cables in a compact environment. Note that any of the optical connectors described in this disclosure may be used in these embodiments, including the optical connectors of FIGS. **21**B, **37**, and **41**, to be discussed in detail below. FIG. **14**A shows two duplex cables similar to the cable shown in FIG. **6**. In some embodiments, one or more detachable clips **1401** may be attached to two or more zip cables to prevent the zip cables from detaching. This allows for two or more cables to be bundled and reduce the risk of entanglement with additional cables. FIG. **14**B is an illustrative example of how easily an embodiment can separate into two individual connectors by unbinding the cables and thus quickly and easily creating two independent fiber optic channels that can move and be connected independently. FIG. **14**C shows an embodiment in which a duplex connector like that of FIGS. **6** and **14**A is connected to two separate individual connectors. Through the variable housing configurations depicted above in FIG. **10**, the cable of FIG. **14**A can be reconfigured as the cables of either **14**B or FIG. **14**C.

In addition to binding existing fiber cables, some embodiments herein may utilize a new four fiber zip cable. Referring now to FIG. **15**A, a conventional zip cable (i.e., one with a single fiber strand **1520** per jacket **1521**) is shown in comparison with an embodiment in which two fibers **1522** per jacket **1523** are utilized. It should be understood that this is merely a non-limiting example. In some embodiments, multiple fibers may be included per jacket, such as, for example, four fibers per jacket in order to utilize the single boot **909** and uni-body rear body **906** of the connector shown in FIG. **9**.

A specific example using multi-strand cables is shown in FIG. **16** for illustrative purposes only. It should be understood that numerous alternatives and modifications are possible, such as, for example, that shown in FIGS. **18**A-**18**B and FIGS. **19**A-**19**D. As shown, a switch (e.g., 100G switch) **1630** is shown with a transceiver (e.g., 100G transceiver) **1631**. The transceiver **1631** has a receptacle to receive duplex connectors **1632**. From each of the two duplex connectors **1632**, a four fiber cable **1633** extends to connect to various other connectors and transceivers. In some embodiments, as discussed herein, a clip (e.g., detachable clip) **1640** may connect two or more cables (e.g., **1633**) to ensure the zip cables do not come apart. As shown, one four fiber cable **1633** is split into two two-fiber cables **1634**, which are then each attached to a single simplex connector **1635** and placed into a transceiver (e.g., 25G transceiver) **1636**. As further shown, one of the four fiber cables **1637** is connected to a single duplex connector **1638**, which is then inserted into another transceiver (e.g., 50G transceiver) **1639**.

An additional or alternative embodiment is shown in FIG. **17**. As shown, one or more switches (e.g., 400G switches) **1730** and **1732** are shown each with a transceiver (e.g., 400G transceiver) **1731** and **1733**. The first transceiver **1731** has a receptacle that is receiving two simplex (single) connectors **1734** and one duplex (dual) connector **1735**. From each of the two simplex connectors **1734**, a two fiber cable **1736** extends to connect to various other connectors and transceivers. Similar to FIGS. **14** and **16**, some embodiments may have a clip (e.g., detachable clip) **1740** that may connect two or more cables (e.g., **1736**, **1738**, etc.) to ensure the zip cables do not come apart. From the duplex connector **1735** a four-fiber cable **1737** is split into two two-fiber cables **1738**, which are then each attached to a single simplex connector each and placed into a transceiver (e.g., 400G transceiver).

Accordingly, embodiments described herein allow for improvements over the current state of the art. By way of specific example, connectors generally have three types of fixed cables. Moreover, some cables may be bifurcated. As such, the cable cannot be split once installed and the polarity of the cables cannot be changed. Alternatively, the embodiments discussed herein may allow a user to change from a four-way to a 2-Duplex, to a 4-simplex connector, etc. (e.g., FIG. **20**). Moreover, as discussed herein, the individual connectors can be split into individual connectors anytime, even after deployment. Additionally, the polarity can be changed within the connectors easily in a manner that does not risk damage to the one or more ferrules and fibers, as discussed above. It should also be noted that the depicted connectors are used herein merely for illustrative purposes, and that various other connectors may be used in any embodiment (e.g., an MT connector, such as that shown in FIGS. **18**A-**18**B, and the optical connectors of FIGS. **21**, **37**, and **41**).

FIGS. **18**A-**18**B depict an optical connector including an MT ferrule **1810** in a housing that is substantially similar to the housing **301** of FIG. **3**. As with the embodiment of FIG. **3**, the various features of the connector are configured such that two optical connectors having two MT-type optical ferrules may be accommodated in a small form-factor pluggable (SFP) transceiver footprint or at least four optical connectors having a total of four MT-type optical ferrules may be accommodated in a quad small form-factor pluggable (QSFP) transceiver footprint.

FIGS. **19**A-**19**D show alternative embodiments of the optical connectors of FIG. **3** in which the push-pull tabs are not integrated with the optical connector housing. As seen in FIGS. **19**A-**19**B, a push-pull tab **1930** is a separable element from a connector housing. The push-pull tab **1930** actuates a latch **1910** for inserting and extracting the connector from an adapter or transceiver. An alternative latching mechanism is depicted in FIGS. **19**C-**19**D. Latch **1950** includes a notch that is actuated by push-pull tab **1960**.

FIG. **20** depicts the disassembly of a four-connector housing (two duplex connectors in a single housing) into two duplex connectors. This may be performed in changing, for example, a connector as shown in FIG. **14**A to a connector as shown in FIG. **14**C. In FIG. **20**, an optical connector **2000** is depicted including a housing **2010** that houses two duplex connectors (four optical fibers). The housing **2010** is removed, leaving the two duplex connectors **2020**. Two housings **2030** are then provided and two individual duplex connectors **2040** are then created from the initial single housing connector **2000**. This reconfigurable housing simplifies cable management, for example, when optical cables are interconnected between lower-speed transceivers and higher-speed transceivers as seen in FIG. **16**.

FIG. **21**A depicts an embodiment of an optical connector **2100**, shown in exploded view while **21**B depicts the optical connector **2100** in an assembled view. Optical connector **2100** may include an outer housing **2110**, a front body **2115**, one or more ferrules **2122**, one or more ferrule flanges **2124**, one or more springs **2125**, a back body **2130**, a back post **2135**, a crimp ring **2140**, and a boot **2145**. The outer housing

2110 may include a longitudinal bore for accommodating the front body 2115 and a ferrule assembly 2120, a connector alignment key 2105 used during interconnection, a connector flap 2103 and an optional pull tab 2107 to facilitate removal of the connector 2100 when connected in a dense array of optical connectors. Optionally, the ferrules may be LC-type ferrules having an outer diameter of 1.25 mm.

In prior art optical connectors, an inner enclosed housing was used in place of open front body 2115. Front body 2115 includes top and bottom portions but no sidewalls, termed "open sidewalls" in this embodiment. By using front body 2115, space occupied by the prior art inner housing sidewalls becomes available to increase the density of optical connectors within a given footprint, an advantage over prior art connectors. It was determined that the outer housing 2110, combined with the front body 2115, provided sufficient mechanical strength and ferrule protection, advantageously providing the space for additional optical connectors. Removal of sidewalls increases available space by 1-2 millimeters.

Note that, in this embodiment, the outer housing is configured to hold two optical ferrules 2122. Typically, two optical ferrules may be used in a "transmit" and "receive" pairing of optical fibers, called a duplex connector. However, the outer housing may be configured to hold more or fewer optical ferrules including a single optical ferrule, multiples of single optical ferrules, or multiple pairs of optical ferrules, depending upon the application. Further, the front body 2115 may be removed from the outer housing 2110 and the front body placed in a larger outer housing with other front bodies to form a larger optical connector in a manner to be discussed in more detail below. In particular, two front bodies may be used with a four-ferrule outer housing or four front bodies may be used with an eight-ferrule outer housing.

Turning to FIGS. 29A and 29B, isometric and front views of the outer housing 2110 are shown. As seen in the front view of FIG. 29B and the cross-sectional view of FIG. 29C, connector orientation protrusions 2910 are provided within the interior of the outer housing 2110. Connector protrusion 2910 is further seen in the inner view of the housing, FIG. 29E. When the front body is inserted within the longitudinal bore 2101 of outer housing 2110, the outer housing connector flap 2103 locks the outer housing 2110 to the front body 2115 in the following manner. As the front body 2115 is inserted into the outer housing 2110, the outer housing locking surface 2114, best seen in FIG. 27C, engages the connector orientation protrusion 2910, seen in an inside view of the outer housing in FIG. 29D, labelled as "Flap A", flexing the connector flap 2103 outwardly from the outer housing body 2110, depicted in the inset of FIG. 29C. The flap protrusion mating location is indicated as "mating place B" in FIG. 29D. Once the locking surface 2114 passes beyond the orientation protrusion, the connector flap returns to its original position (FIG. 29A), and the protrusion 2910 engages locking surface 2114 and any withdrawal of the front body assembly from the outer housing 2110 is prevented as the proximal end face of the connector flap 2103 is stopped by protrusion 2910.

FIGS. 35A-35C depict the sequence of operations to remove an assembled front body from the outer housing in order to reverse polarity or to aggregate plural connectors in a multi-connector housing. To separate the front body from the outer housing, the connector flap 2103 is flexed outward using a finger or a tool, as depicted in FIG. 35B. Flexing the connector flap 2103 outwardly causes the protrusion 2910 to disengage from the front body's outer housing locking surface 2114, permitting the front body/ferrule assembly 2115 to be removed from the outer housing. This may be performed when it is desired to reverse the polarity of the connector (to be discussed below) or when desiring to aggregate plural connectors into a larger connector housing as discussed above. The separated components are depicted in FIG. 35C, that is, front body 2115 with the ferrule assembled therein and outer housing 2110.

In some embodiments, the back body 2130 may comprise one or more protrusions or hooks 2134, best seen in FIGS. 28A and 28B, which may interlock with a back body hook window/cutout 2119 in the front body 2115. This may allow for the back body 2130 and the front body 2115 to be securely fastened together around the ferrule(s) 2122, ferrule flange(s) 2124, and the spring(s) 2125. The back body 2130 includes a cable bore 2820, spring guides 2132, and side protrusions 2810.

During assembly, the ferrule flanges 2124 fit into ferrule flange alignment slots 2117 (see FIGS. 27A and 27B) adjacent the ferrule openings 2116 of the front body 2115, compressing the springs 2125 (preload) which are positioned along front body spring holders 2118. The ends of the springs 2125 are secured on spring guides 2132 (FIGS. 28A, 28B) of back body 2130 by spring tension. As seen in the assembled cross-sectional views of FIGS. 23A and 23B, the springs 2125 are positioned to urge the ferrules 2122 into contact with mating connectors or transceiver optics, ensuring minimum insertion loss. As further seen in FIGS. 27A and 27B, the front body includes a receptacle hook recess 2710 with a receptacle hook retainer surface 2720 the receiver a receptacle hook when mating with an adapter or with a transceiver receptacle, as shown in further detail below.

Further reductions in connector size may be obtained by reducing the size of springs 2125, see FIG. 21. By using a maximum spring outer diameter of 2.5 mm, the pitch of the ferrules, that is to say, the spacing between adjacent ferrules, may be reduced to 2.6 mm when coupled with the removal of inner housing walls and walls separating adjacent ferrules. This advantage is best seen in FIG. 22 which depicts the front of connector 2100 showing overall connector dimensions and ferrule pitch. The connector size 4.2×8.96×30.85 mm (excluding optional pull tab 2107 and connector alignment key 2105) with a ferrule pitch of 2.6 mm.

As best seen in FIG. 21B, the outer housing 2110 and the front body 2115 together provide a receptacle hook ramp 2940 (on the outer housing) used to guide a receptacle hook into a receptacle hook recess 2170 (in the front body 2115), also shown in FIGS. 27A and 27B (receptacle hook recess 2710 and receptacle hook retainer surface 2720). The receptacle hook, to be discussed in more detail below, may be from an adapter or a transceiver to secure the optical connector 2100 thereto.

The optical connectors 2100 may be used in a variety of connection environments. In some applications, the optical connectors 2100 will mate with other optical connectors. Typically, this mating will occur with a receptacle such as an adapter or optical transceiver receptacle. An exemplary adapter 2400 depicted in FIG. 24 in an exploded view and depicted in FIG. 31 having four mating pairs of optical connectors 2100 latched therein. In other applications, as when an optical signal is to be converted to an electrical signal, the micro optical connectors 2100 will mate with an optical receptacle in a transceiver 3600 as shown in FIG. 36. Typically, transceiver 3600 may be found in a data center, switching center, or any other location where optical signals

are to be converted to electrical signals. Transceivers are often a part of another electrical device such as a switch or a server, as is known in the art. Although much of the connection operation of this embodiment will be described with respect to an adapter, **2400**, it is understood that substantially similar mechanical retention mechanisms are positioned within the receptacle of transceiver **3600** so that any description of connector retention in adapter **2400** applies in a substantially similar way to retention of an optical connector within transceiver **3600**. An example of a transceiver optical receptacle is depicted in FIG. **36**B (holding optical connectors **2100**); as seen in FIG. **36**B, the connection environment is substantially similar to one-half of an adapter **2400**.

Turning to FIG. **24**, further size reductions in the overall optical assembly of connectors plus adapter or connectors plus transceiver may be obtained through various connection mechanisms to be described with respect to the adapter **2400** but also apply to optical connection features within the front end of transceiver **3600**. The adapter **2400** includes an adapter housing **2402** having an adapter alignment assembly **2430** positioned therein. The adapter alignment assembly **2430** includes alignment sleeves **2410** positioned within alignment sleeve openings **2440** of alignment sleeve holders **2442**. The adapter alignment assembly further includes receptacle hooks **2302** that will grip optical connectors **2100** through front body connector hook recess **2710** of FIG. **21**B. As seen in FIG. **30**, receptacle hooks **2302** include an inner surface **3110**. The adapter housing **2402** further includes connector alignment slots **2403** that mate with connector alignment key **2105** of FIG. **21**A. The connectors **2100** are received through connector opening **2405** of the adapter housing **2402** which also includes flex tab **2401**, cutout **2456**, mount plate **2452** and panel hook **2490**. To assemble the adapter alignment assembly **2430** in the adapter housing **2402**, adapter housing hooks **2432** are provided. Adapter housing hooks **2432** are received in housing adapter hook openings.

It should be understood that above description of connection mechanisms with respect to adapter **2400** may be applied in a substantially similar way with respect to the receptacle of transceiver **3600**. Particularly, the receptacle of transceiver **3600** may include a receptacle housing having a receptacle alignment assembly positioned therein. The receptacle alignment assembly includes alignment sleeves positioned within alignment sleeve openings of alignment sleeve holders. The receptacle alignment assembly further includes receptacle hooks that will grip optical connectors **2100** through front body connector hook recess **2710** of FIG. **21**B. As seen in FIG. **30**, receptacle hooks **2302** include an inner surface **3110**. The receptacle housing further includes connector alignment slots that mate with connector alignment key of FIG. **21**A. The connectors **2100** are received through connector opening of the receptacle housing which also includes flex tab, cutout, mount plate and panel hook. To assemble the receptacle alignment assembly in the receptacle housing, receptacle housing hooks are provided. Receptacle housing hooks are received in housing receptacle hook openings.

To further reduce the size of optical connectors and associated mating components, the adapter housing **2402** includes receptacle hook openings **2420**, seen in FIGS. **25**A and **25**B. Receptacle hook openings **2420** accommodate the clearance required by receptacle hooks **2302** when they flex upwards prior to latching with connectors **2100**. The interaction of the receptacle hooks **2302**, having slanted inner surfaces **3110**, with the receptacle hook openings **2420** is best seen in FIGS. **32**B and **34**A-C. Prior to latching (FIG. **34**A), the receptacle hook **2302** is in an unflexed condition within the receptacle (adapter or transceiver). As the connector **2100** is inserted into the adapter housing **2402** or the transceiver, the receptacle ramp **2490** pushes against the receptacle hook inner surfaces **3110**, flexing receptacle hook **2302** into the receptacle hook opening **2420**. Without providing the opening, additional clearance would need to be provided to accommodate the flexing of the receptacle hook **2302**. This additional required clearance is depicted in the prior art connector/adapter of FIG. **32**A. As seen in FIG. **32**A, a connector latch gap **3210** must be provided in the prior art to accommodate the prior art connector hooks, increasing the overall footprint of the prior art connector/adapter assembly. By providing receptacle hook openings **2420** in the present disclosure, approximately 2.25 mm of valuable footprint real estate is obtained which may be used to increase connector density.

Another improvement in adapter size is obtained by removing prior art adapter walls between adjacent connectors. This is best seen in the front view of an assembled adapter **2400** shown in FIG. **26**. As seen, pairs of ferrule alignment sleeves **2410** are separated only by connector gap **2610** with a 4.35 mm pitch between adjacent connectors. The adapter size is 19.0×10.71×32.5 mm (excluding the adapter flange **2460**). Also seen in FIG. **26** is the connector alignment slot **2403**, alignment sleeve holder **2442**, and a front view of receptacle hooks **2302**.

FIG. **31** depicts an assembled adapter **2400** with four pairs of mating connectors **2100** latched therein. Note that in the latched position, receptacle hooks **2302** do not extend into receptacle hook openings **2420**. This is further visible in the cross-sectional view of an assembled adapter **2400** of FIG. **25**A. Connector alignment keys **2105** are positioned within connector alignment slots **2403**. As seen in the cross-sectional view of FIG. **23**A, the push-pull tab **2017** may extend beyond the connector boot **2145** providing clearance to easily grip the tab and remove a connector. Also seen in FIG. **31** is adapter flex tab **2401** and panel hook **2490** for interaction with racks or other equipment.

Through the various features described above, the density of optical connectors **2100** that may be provided in the standard transceiver footprint connector spaces may be doubled. For example, in a small form factor pluggable (SFP) footprint of 14×12.25 mm, two connectors **2100** having four LC-type ferrules **2122** of 1.25 mm outer diameter may be accommodated as seen in FIG. **33**B. Similarly, in a quad small form factor pluggable (QSFP) footprint of 13.5×19 mm, four connectors **2100** having a total of eight LC-type ferrules **2122** may be accommodated as seen in FIG. **33**A. Further, by providing the connectors in transmit and receive pairs, greater flexibility in optical routing is obtained, as demonstrated by previous FIGS. **16** and **17**.

Turning to FIG. **37**, another embodiment of an optical connector is depicted. In this embodiment, the last two digits of each element correspond to the similar elements in the optical connector of FIG. **21**A et seq. In FIG. **37**, connector **3700** may include an outer housing **3710**, a front body **3715**, one or more ferrules **3722**, one or more ferrule flanges **3724**, one or more springs **3725**, a back body **3730**, a back post **3735**, a crimp ring **3740** (depicted with an optional heat shrink tube extending therefrom), and a boot **3745**. The outer housing **3710** may include a longitudinal bore **3701** for accommodating the front body **3715** and ferrules **3722**, a connector alignment key **3705** used during interconnection, a connector flap **3703** and an optional pull tab **3707** to facilitate removal of the connector **3700** when connected in

a dense array of optical connectors. Optionally, the ferrules may be LC-type ferrules having an outer diameter of 1.25 mm.

In FIG. **38** an isometric view of the front body **3715** is depicted. In this embodiment, the back body hook cutout **3819** has been moved forward, advantageously strengthening the assembled connector in side load environments. An alignment tab **3895** is provided for mating with a receiving recess on the back body. The receptacle hook recess **3910** operates in a substantially similar manner to the recess of FIG. **21**A, described above. A ferrule flange alignment slot **3817** is also provided.

In FIG. **39**, the back body **3730** is depicted, showing alignment tab recess **3997** for receiving alignment tab **3895**. The front body hook **3934**, for interconnecting in back body hook cutout **3819**, extends outwardly from the main portion of the back body through extended hook arm **3996**. Through the extended hook arm **3996** and the alignment tab **3895**, breakage during side loads is reduced as the load is redistributed more evenly across the entire connector, reducing stress on the backpost.

As seen in FIGS. **40**A-**40**C, the assembled front body **3715** may be removed from the outer housing **3710**, rotated 180° as indicated by the arrow (FIG. **40**B), and re-inserted into the outer housing (FIG. **40**C). This allows for a change in the polarity of the front body **3715**, and therefore the ferrules can switch quickly and easily without unnecessarily risking the delicate fiber cables and ferrules. As described previously with respect to FIGS. **35**A-**35**C, connector flap **3703** is flexed outward to release the front body from the outer housing.

Turning to FIG. **41**, another embodiment of an optical connector is depicted. In this embodiment, the last two digits of each element correspond to the similar elements in the micro optical connectors of FIG. **21**A and FIG. **37**. In FIG. **41**, connector **4100** may include an outer housing **4110**, a front body **4115**, one or more ferrules **4122**, one or more springs **4125**, a back body **4130**, a crimp ring **4140**, and a boot **4145**. The outer housing **4110** may include a connector flap **4103** and an optional pull tab **4107** to facilitate removal of the connector **4100** when connected in a dense array of optical connectors. Optionally, the ferrules may be LC-type ferrules having an outer diameter of 1.25 mm.

As seen in FIG. **42**A, the front body **4015** in this embodiment includes a middle wall **4260** interposed between the ferrules and springs when the front body is assembled. This middle wall reduces the possibility of the springs becoming entangled with each other, binding the connector and breaking the optical fibers. The front body **4015** also includes an alignment cut out guide **4625**, seen in the side view of FIG. **42**B. The alignment cut out guides the back body **4030** into the front body **4015** during assembly of the connecter, and also further reduces the side load that leads to connector breakage or disconnection of the front body and the back body **4030**.

Back body **4030**, depicted in an enlarged view in FIG. **43**, includes an alignment guide **4377** that fits into the alignment cut out guide **4265** of FIG. **42**B. The wall structure **4378** also stops the front body to prevent over-compressing the springs and provides strength under a side load.

Various modifications to the outer housing, depicted in FIGS. **44**A-**44**C, may be used with any of the optical connectors depicted in FIGS. **21**, **37**, and **41** or earlier embodiments. In FIG. **44**A, the push-pull tab **3707** may include a release recess **4473**. Release recess **4473** permits insertion of a tool or fingernail to remove the connector from an adapter or transceiver, without disturbing adjacent connectors. Similarly, FIG. **44**B depicts a release hole **4499** in push-pull tab **3707** to permit insertion of an extraction tool to remove the connector from an adapter or transceiver. FIG. **44**C shows a modified connector flap **3703** with an increased cutout size of 1 mm to make it easier to insert a tool or a finger to flex the flap **3703** and remove the front body assembly when making a polarity change or aggregating the front body with other front bodies in a larger outer housing.

Another embodiment of an adapter/transceiver receptacle is depicted in FIG. **45**. Unlabeled elements are substantially similar to elements depicted in FIG. **24**. In this FIG., adapter housing hooks **4532** can be seen along with receptacle hooks **4502**. Turning to the cross-sectional view of the assembled adapter in FIG. **46**, the engagement of these elements may be seen.

Another embodiment of an optical connector **4700** is depicted in FIG. **47**. The optical connector of FIG. **47** includes outer housing **4710**, front body **4715**, ferrules **4722**, springs **4725**, back body **4730**, backpost **4735**, crimp ring **4740**, and boot **4745**. Here, the emphasis is on the back body, **4730**. A more detailed view of the back body **4730** is presented in FIG. **48**. In this embodiment, the backpost flange has a substantially rectangular shape in order to narrow the overall connector profile by approximately 0.5 mm. Back post overmolding **4859** accommodates the back post flange **4857** and reduces the potential for back post breakage. The back wall **4853** is extended in length to 3 mm from 1.5 mm to improve the sideload strength of the overall connector. The crimp ring positioning **4855** is inversed from earlier embodiments to improve holding of aramid fiber from an optical fiber cable, improving cable retention of the back post.

Many advantages are achieved by the backpost of FIG. **48**. In addition to increased connector strength, a longer fiber path **4901** is provided as shown in FIG. **49**. This longer fiber path, approximately 1.5 mm longer than in previous embodiments, allows for a gentler curve as the fibers are split from the fiber optic cable, improving insertion and return loss of the fibers. In FIG. **49**, the back wall **4853** can be seen as a portion of the back body **4730**.

In view of the various modifications of this embodiment, FIG. **50** depicts a connector **4700** front view showing overall reduced connector width of 3.85 mm. Such a size reduction permits **4** optical connectors (a total of 8 ferrules) to be accommodated in a transceiver or connector footprint of 16 mm (including tolerances). Thus, the connectors of the present invention may be used to connect 8 LC-ferrule-housed fibers in a QSFP footprint.

To further decrease the space required by the optical connectors, a side thickness reduction may be carried out on the boot of connector **4700**. Side thickness reduction **5103**, depicted in FIG. **51**, narrows the thickness of the boot on either side, reducing the space required by the boot to the 3.85 mm profile of connector **4700**. Thus four connectors will fit in the QSFP transceiver footprint. This footprint is shown in the adapter front view of FIG. **52**—as noted above, the front view of an adapter and that of a transceiver are substantially similar from the optical perspective. In FIG. **52**, the adapter inner wall is reduced from 17.4 mm to 16 mm. All of the modifications set forth in the FIG. **47** et seq. embodiment make it possible for the four connectors to fit in the profile of FIG. **52**.

In some embodiments, as shown in FIG. **53**, a connector **10300** may comprise various components. Referring to FIG. **53**, an illustrative embodiment of a connector **10300** is shown in an exploded view to display detail. In some embodiments, and as discussed further herein, a connector

10300 may have an outer housing **10301**, a front body **10302**, one or more ferrules **10303**, one or more ferrule flanges **10304**, one or more springs **10305**, a back body **10306**, a back post **10307**, a crimp ring **10308**, a boot **10309**, and a push-pull tab **10310**. In some embodiments, the back body **10306** may comprise one or more protrusions **10306.1** which may interlock with a window/cutout **10302.1** in the front body **10302**. This may allow for the back body **10306** and the front body **10302** to be securely fastened together around the ferrule(s) **10303**, ferrule flange(s) **10304**, and the spring(s) **10305**.

Referring now to FIG. **54**, an embodiment is shown wherein the connector **10400** is assembled. In some embodiments, the assembled connector may have an outer housing **10401**, a front body (not shown, see FIGS. **53** and **55**.), one or more ferrules **10403**, one or more ferrule flanges (not shown), one or more springs (not shown), a back body **10406**, a back post (not shown), a crimp ring (not shown), a boot **10409**, a push-pull tab **10410**, and one or more latching mechanisms made up of a window **10412** on the outer housing and a protrusion **10413** on the front body. The latching mechanism **10412** and **10413** securely attaches the outer housing **10401** to the front body. In a further embodiment, the push-pull tab **10410** may have an opening to receive a locking tab **10411**. The locking tab **10411** of the outer housing **10401** is used to interlock with an adapter (not shown) to secure the connector into the adapter. As would be understood by one skilled in the art, the push-pull tab **10410** enables easy manipulation of the locking tab **10411** to allow for removal of the connector from the adapter without requiring additional tools.

As shown in FIG. **55**, in some embodiments, the latching mechanism of the connector **10500** may be made up of two parts: a window **10512** and a protrusion **10513**. As illustrated in FIG. **55**, the outer housing **10501** can slide on to or be removed from the front body **10502** by disengaging the latching mechanisms formed by the protrusion **10513** exiting through the window **10512**, whereby it contacts a side wall of the window (refer to FIG. **54** for an illustrated example of the outer housing being attached to the front body via the latching mechanism). In some embodiments, the push-pull tab **10510** may also be detached from the outer housing **10501**, as shown.

In a further embodiment, the front body **10502** may be removed from the outer housing **10501**, rotated 180°, and re-inserted into the outer housing. This allows for a change in the polarity of the front body **10502**, as shown by the arrow diagram in FIG. **55**, and therefore the ferrules can switch quickly and easily without unnecessarily risking the delicate fiber cables and ferrules.

In some embodiments, it may be beneficial to connect two or more connectors together to increase structural integrity, reduce the overall footprint, and cut manufacturing costs. Accordingly, as shown in FIG. **56**, a connector **10600** may in some embodiments, utilize an outer housing **10601** that is capable of holding two front bodies (not shown). Various other embodiments are disclosed herein, and it should be noted that the embodiments disclosed herein are all non-limiting examples shown for explanatory purposes only.

Accordingly, although the embodiment shown in FIG. **56** utilizes a duplex outer housing **10601**, additional or alternative embodiments may exist with more capacity. As shown in FIG. **56**, in some embodiments, the outer housing **10601** may accept two front bodies (not shown), each with two separate ferrules **10603**. As shown, the front body (not shown) may securely fasten to the outer housing **10601** via the latching mechanism **10612** and **10613**. In additional embodiments, the push-pull tab **10610** may be modified, as shown, such that a single tab can be used to free the two or more connectors from an adapter. As illustrated in FIG. **56**, the push-pull tab **10610** may include two openings with which to receive multiple locking tabs **10611** of the outer housing **10601**. As discussed herein the locking tabs **10611** of the outer housing **10601** are used to secure the connectors to an adapter (not shown). In one or more further embodiments, the connectors may have individual back bodies **10606** and boots **10609** (i.e., one back body/boot per front body) as shown.

Alternatively, in some embodiments, such as that shown in FIG. **57**, the connector **10700** may have a single boot **10709** and a duplex (i.e., uni-body) back body **10706** instead of individual back bodies (e.g., such as shown in FIG. **56**). In some embodiments, the duplex back body **10706** may have different dimensions than that of the individual back bodies of FIG. **56**, such as, for example, they may be longer to accommodate the need for routing the fiber after it exits the boot **10709**. As with other embodiments discussed herein, the connector shown in FIG. **57** may also include an outer housing (e.g., duplex outer housing) **10701**, one or more ferrules **10703**, at least one latching mechanism formed by the protrusion **10713** exiting through the window **10712**, and push-pull tab **10710**.

As stated, it may be beneficial to connect two or more connectors together to increase structural integrity, reduce the overall footprint, and cut manufacturing costs. Accordingly, similarly to FIG. **56**, FIG. **58** shows an connector **10800** that may, in some embodiments, utilize an outer housing **10801** that is capable of holding multiple (e.g., four) front bodies (not shown).

As shown in FIG. **58**, some embodiments may have an outer housing **10801** able to accept up to four front bodies, each with one or more ferrules **10803**. As shown, each front body (not shown) may securely fasten to the outer housing **10801** via the latching mechanism **10812** and **10813**. In additional embodiments, the push-pull tab **10810** may be modified, as shown, such that a single tab can be used to free the up to four connectors from an adapter. As illustrated in FIG. **58**, the push-pull tab **10810** may include four openings with which to receive multiple locking tabs **10811** of the outer housing **10801**. As discussed herein the locking tabs **10811** of the outer housing **10801** are used to secure the connectors to an adapter (not shown). In one or more further embodiments, the connectors may have individual back bodies **10806** and boots **10809** (i.e., one back body/boot per front body) as shown.

Alternatively, in some embodiments, such as that shown in FIG. **59**, the connector **10900** may utilize one or more duplex back bodies **10906** with a single boot **10909**, similar to that shown in FIG. **57**. Thus, similar to FIG. **57**, the embodiment shown in FIG. **59** may allow for a further reduced foot print, less cabling, and easier maintenance of the connector. Accordingly, one or more embodiments may have an outer housing **10901** may accept up to four front bodies, each with one or more ferrules **10903**. As shown, each front body (not shown) may securely fasten to the outer housing **10901** via the latching mechanism **10912** and **10913**. In additional embodiments, the push-pull tab **10910** may be modified, as shown, such that a single tab can be used to free the up to four front bodies from an adapter. As illustrated in FIG. **59**, the push-pull tab **10910** may include four openings with which to receive multiple locking tabs **10911** of the outer housing **10901**. As discussed herein the locking tabs **911** of the outer housing **10901** are used to secure the connectors to an adapter (not shown).

In further embodiments, such as that shown in FIG. **60**, the connector **101000** may utilize a single uni-body back body **101006** with a single boot **101009**. Thus, the embodiment shown in FIG. **59** may allow for a further reduced foot print, even less cabling, and easier maintenance of the connector. Accordingly, one or more embodiments may have an outer housing **101001** that may accept up to four front bodies, each with one or more ferrules **101003**. As shown, each front body (not shown) may securely fasten to the outer housing **101001** via the latching mechanism **101012** and **101013**. In additional embodiments, the push-pull tab **101010** may be modified, as shown, such that a single tab can be used to free up to four connectors from an adapter. As illustrated in FIG. **60**, the push-pull tab **101010** may include four openings with which to receive multiple locking tabs **101011** of the outer housing **101001**. As discussed herein the locking tabs **101011** of the outer housing **101001** are used to secure the connectors to an adapter (not shown).

Referring now to FIG. **61**, an embodiment **101100** is shown in which the connector (not shown in its entirety) is inserted into an adapter **101114**. In this specific non-limiting example, the connector is similar to that shown in FIG. **58** (i.e., comprising four front bodies each with their own back body **101106** and boot **101109**). However, unlike FIG. **58**, the embodiment shown here utilizes four individual push-pull tabs **101110** instead of a single push-pull tab which manipulates four latching tabs to allow the connector to be removed from the adapter **101114**.

Various benefits and details have been discussed herein with regard to the connectors and their modular ability (e.g., to include multiple connectors into a single unit). In addition to the reduced footprint, structural improvements, and cost reduction, various embodiments herein may also be beneficial with regard to reducing the burden of cabling in a data center environment. Illustrative embodiments shown in FIGS. **62**A through **62**C depict cable configurations that can be used to reduce the complexity of optical cables in a compact environment. FIG. **62**A shows two duplex cables similar to the cable shown in FIG. **56**. This allows for two or more cables to be bundled and reduce the risk of entanglement with additional cables. FIG. **62**B is an illustrative example, of how easily an embodiment can separate into two individual connectors by unbinding the cables and thus quickly and easily creating two independent fiber optic channels that can move independently. FIG. **62**C shows an embodiment in which a duplex connector like that of FIGS. **56** and **62**A is connected to two separate individual connectors.

In addition to binding existing fiber cables, some embodiments herein may utilize a new four fiber zip cable. Referring now to FIG. **63**A, a conventional zip cable (i.e., one with a single fiber strand **101320** per jacket **101321**) is shown in comparison with an embodiment where two fibers **101322** per jacket **101323** may be utilized. It should be understood that this is merely a non-limiting example. In some embodiments, multiple fibers may be included per jacket, such as, for example, four fibers per jacket in order to utilize the single boot **101009** and uni-body read body **101006** of the connector shown in FIG. **60**.

A specific example using multi-strand cables is shown in FIG. **64** for illustrative purposes only. It should be understood that numerous alternatives and modifications are possible, such as, for example, that shown in FIG. **66**A-**66**B, FIGS. **67**A-**67**D, and **68**A-**68**B. As shown, a switch (e.g., 100G switch) **101430** is shown with a transceiver (e.g., 100G transceiver) **101431**. The transceiver **101431** has an adapter to receive two mini duplex connectors **101432**. From each of the two duplex connectors **1432**, a four fiber cable **101433** extends to connect to various other connectors and transceivers. As shown, one four fiber cable **101433** is split into two two-fiber cables **101434**, which are then attached to a single simplex connector **101435** and placed into a transceiver (e.g., 25G transceiver) **101436**. As further shown, one of the four fiber cables **101437** is connected to a single mini duplex connector **101438**, which is then inserted into another transceiver (e.g., 50G transceiver) **101439**.

Accordingly, embodiments described herein allow for improvements over the current state of the art. By way of specific example, ROX connectors generally have three types of fixed cables: ROX 1, ROX 2, and ROX 4. Moreover, ROX cables are bifurcated. As such, the cable cannot be split once installed and the polarity of the cables cannot be changed. Alternatively, the embodiments discussed herein may allow a user to change from a four way to a 2-Duplex, to a 4-simplex connector, etc. (e.g., FIG. **69**). Moreover, as discussed herein, the individual connectors can be split into individual connectors anytime, even after deployment. Additionally, as discussed herein, the polarity can be changed within the connectors in an easy manner that does not risk damage to the one or more ferrules. It should also be noted, as discussed herein that connectors are used herein merely for simplicity purposes, and that various other connectors may be used in any embodiment (e.g., an MT connector, such as that shown in FIG. **66**A-**66**B).

In the above detailed description, reference is made to the accompanying drawings, which form a part hereof. In the drawings, similar symbols typically identify similar components, unless context dictates otherwise. The illustrative embodiments described in the detailed description, drawings, and claims are not meant to be limiting. Other embodiments may be used, and other changes may be made, without departing from the spirit or scope of the subject matter presented herein. It will be readily understood that the aspects of the present disclosure, as generally described herein, and illustrated in the Figures, can be arranged, substituted, combined, separated, and designed in a wide variety of different configurations, all of which are explicitly contemplated herein.

The present disclosure is not to be limited in terms of the particular embodiments described in this application, which are intended as illustrations of various aspects. Many modifications and variations can be made without departing from its spirit and scope, as will be apparent to those skilled in the art. Functionally equivalent methods and apparatuses within the scope of the disclosure, in addition to those enumerated herein, will be apparent to those skilled in the art from the foregoing descriptions. Such modifications and variations are intended to fall within the scope of the appended claims. The present disclosure is to be limited only by the terms of the appended claims, along with the full scope of equivalents to which such claims are entitled. It is to be understood that this disclosure is not limited to particular methods, reagents, compounds, compositions or biological systems, which can, of course, vary. It is also to be understood that the terminology used herein is for the purpose of describing particular embodiments only, and is not intended to be limiting.

With respect to the use of substantially any plural and/or singular terms herein, those having skill in the art can translate from the plural to the singular and/or from the singular to the plural as is appropriate to the context and/or application. The various singular/plural permutations may be expressly set forth herein for sake of clarity.

It will be understood by those within the art that, in general, terms used herein, and especially in the appended claims (for example, bodies of the appended claims) are generally intended as "open" terms (for example, the term "including" should be interpreted as "including but not limited to," the term "having" should be interpreted as "having at least," the term "includes" should be interpreted as "includes but is not limited to," et cetera). While various compositions, methods, and devices are described in terms of "comprising" various components or steps (interpreted as meaning "including, but not limited to"), the compositions, methods, and devices can also "consist essentially of" or "consist of" the various components and steps, and such terminology should be interpreted as defining essentially closed-member groups. It will be further understood by those within the art that if a specific number of an introduced claim recitation is intended, such an intent will be explicitly recited in the claim, and in the absence of such recitation no such intent is present. For example, as an aid to understanding, the following appended claims may contain usage of the introductory phrases "at least one" and "one or more" to introduce claim recitations. However, the use of such phrases should not be construed to imply that the introduction of a claim recitation by the indefinite articles "a" or "an" limits any particular claim containing such introduced claim recitation to embodiments containing only one such recitation, even when the same claim includes the introductory phrases "one or more" or "at least one" and indefinite articles such as "a" or "an" (for example, "a" and/or "an" should be interpreted to mean "at least one" or "one or more"); the same holds true for the use of definite articles used to introduce claim recitations. In addition, even if a specific number of an introduced claim recitation is explicitly recited, those skilled in the art will recognize that such recitation should be interpreted to mean at least the recited number (for example, the bare recitation of "two recitations," without other modifiers, means at least two recitations, or two or more recitations). Furthermore, in those instances where a convention analogous to "at least one of A, B, and C, et cetera" is used, in general such a construction is intended in the sense one having skill in the art would understand the convention (for example, "a system having at least one of A, B, and C" would include but not be limited to systems that have A alone, B alone, C alone, A and B together, A and C together, B and C together, and/or A, B, and C together, et cetera). In those instances where a convention analogous to "at least one of A, B, or C, et cetera" is used, in general such a construction is intended in the sense one having skill in the art would understand the convention (for example, "a system having at least one of A, B, or C" would include but not be limited to systems that have A alone, B alone, C alone, A and B together, A and C together, B and C together, and/or A, B, and C together, et cetera). It will be further understood by those within the art that virtually any disjunctive word and/or phrase presenting two or more alternative terms, whether in the description, claims, or drawings, should be understood to contemplate the possibilities of including one of the terms, either of the terms, or both terms. For example, the phrase "A or B" will be understood to include the possibilities of "A" or "B" or "A and B."

In addition, where features or aspects of the disclosure are described in terms of Markush groups, those skilled in the art will recognize that the disclosure is also thereby described in terms of any individual member or subgroup of members of the Markush group.

As will be understood by one skilled in the art, for any and all purposes, such as in terms of providing a written description, all ranges disclosed herein also encompass any and all possible subranges and combinations of subranges thereof. Any listed range can be easily recognized as sufficiently describing and enabling the same range being broken down into at least equal halves, thirds, quarters, fifths, tenths, et cetera As a non-limiting example, each range discussed herein can be readily broken down into a lower third, middle third and upper third, et cetera As will also be understood by one skilled in the art all language such as "up to," "at least," and the like include the number recited and refer to ranges which can be subsequently broken down into subranges as discussed above. Finally, as will be understood by one skilled in the art, a range includes each individual member. Thus, for example, a group having 1-3 cells refers to groups having 1, 2, or 3 cells. Similarly, a group having 1-5 cells refers to groups having 1, 2, 3, 4, or 5 cells, and so forth.

Various of the above-disclosed and other features and functions, or alternatives thereof, may be combined into many other different systems or applications. Various presently unforeseen or unanticipated alternatives, modifications, variations or improvements therein may be subsequently made by those skilled in the art, each of which is also intended to be encompassed by the disclosed embodiments.

The invention claimed is:

1. An optical fiber connector comprising:

first and second optical fiber ferrules;

a connector housing having a front end portion and a rear end portion spaced apart along a longitudinal axis, the connector housing comprising a top portion and a bottom portion spaced apart along a transverse axis perpendicular to the longitudinal axis, the connector housing holding the first and second optical fiber ferrules such that the first and second optical fiber ferrules are exposed through the front end portion for making an optical connection and the first and second optical fiber ferrules are spaced apart from one another along the transverse axis,

a depressible latch above the top portion of the connector housing; and

an elongate arm connected to the connector housing above the top portion and configured to be pulled to actuate the depressible latch;

wherein the connector housing comprises a guide connecting the elongate arm to the optical fiber connector.

2. The optical fiber connector as set forth in claim **1**, wherein the guide defines a groove extending along the longitudinal axis.

3. The optical fiber connector as set forth in claim **2**, wherein the elongate arm is slidably received in the groove.

4. The optical fiber connector as set forth in claim **1**, wherein the elongate arm comprises a front end portion and a rear end portion spaced apart along the longitudinal axis.

5. The optical fiber connector as set forth in claim **4**, wherein the front end portion of the elongate arm defines an opening.

6. The optical fiber connector as set forth in claim **5**, wherein the depressible latch is received in the opening.

7. The optical fiber connector as set forth in claim **6**, wherein the depressible latch has a front end portion and rear end portion spaced apart along the longitudinal axis and wherein the depressible latch extends upward along the transverse axis as the depressible latch extends along the longitudinal axis from the front end portion to the rear end portion of the depressible latch.

8. The optical fiber connector as set forth in claim 7, wherein the rear end portion of the depressible latch is spaced apart above the top portion of the connector housing along the transverse axis.

9. The optical fiber connector as set forth in claim 8, wherein the front end portion of the elongate arm includes an edge defining a front end of the opening.

10. The optical fiber connector as set forth in claim 9, wherein the depressible latch has an upper surface, the edge opposing the upper surface.

11. The optical fiber connector as set forth in claim 1, wherein the connector housing includes a front body and a back body.

12. The optical fiber connector as set forth in claim 11, further comprising a single cable boot extending rearward from the back body.

13. The optical fiber connector as set forth in claim 1, further comprising a single cable boot extending rearward from the connector housing.

14. The optical fiber connector as set forth in claim 10, wherein the elongate arm is configured to be pulled rearward along the longitudinal axis with respect to the connector housing whereby the edge slides longitudinally along the upper surface to depress the depressible latch.

15. The optical fiber connector as set forth in claim 14, wherein the guide defines a groove extending along the longitudinal axis.

16. The optical fiber connector as set forth in claim 15, wherein the elongate arm is slidably received in the groove.

17. The optical fiber connector as set forth in claim 15, wherein the connector housing includes a front body and a back body.

18. The optical fiber connector as set forth in claim 17, wherein the front body includes a recess and the back body includes a protrusion received in the recess to connect the back body to the front body.

19. The optical fiber connector as set forth in claim 18, further comprising a single cable boot extending rearward from the connector housing.

20. An optical fiber connector comprising:

first and second optical fiber ferrules;

a connector housing having a front end portion and a rear end portion spaced apart along a longitudinal axis, the connector housing comprising a top portion and a bottom portion spaced apart along a transverse axis perpendicular to the longitudinal axis, the connector housing holding the first and second optical fiber ferrules such that the first and second optical fiber ferrules are exposed through the front end portion for making an optical connection and the first and second optical fiber ferrules are spaced apart from one another along the transverse axis,

a depressible latch above the top portion of the connector housing; and

an elongate arm connected to the connector housing above the top portion and configured to be pulled to actuate the depressible latch;

wherein the elongate arm comprises a front end portion and a rear end portion spaced apart along the longitudinal axis;

wherein the front end portion of the elongate arm defines an opening;

wherein the depressible latch is received in the opening;

wherein the depressible latch has a front end portion and rear end portion spaced apart along the longitudinal axis and wherein the depressible latch extends upward along the transverse axis as the depressible latch extends along the longitudinal axis from the front end portion to the rear end portion of the depressible latch;

wherein the rear end portion of the depressible latch is spaced apart above the top portion of the connector housing along the transverse axis;

wherein the front end portion of the elongate arm includes an edge defining a front end of the opening;

wherein the depressible latch has an upper surface, the edge opposing the upper surface;

wherein the elongate arm is configured to be pulled rearward along the longitudinal axis with respect to the connector housing whereby the edge slides longitudinally along the upper surface to depress the depressible latch.

21. An optical fiber connector comprising:

first and second optical fiber ferrules;

a connector housing having a front end portion and a rear end portion spaced apart along a longitudinal axis, the connector housing comprising a top portion and a bottom portion spaced apart along a transverse axis perpendicular to the longitudinal axis, the connector housing holding the first and second optical fiber ferrules such that the first and second optical fiber ferrules are exposed through the front end portion for making an optical connection and the first and second optical fiber ferrules are spaced apart from one another along the transverse axis,

a depressible latch above the top portion of the connector housing; and

an elongate arm connected to the connector housing above the top portion and configured to be pulled to actuate the depressible latch;

wherein the elongate arm comprises a front end portion and a rear end portion spaced apart along the longitudinal axis;

the optical fiber connector further comprising a push/pull tab extending from the rear end portion of the elongate arm.

22. An optical fiber connector comprising:

first and second optical fiber ferrules;

a connector housing having a front end portion and a rear end portion spaced apart along a longitudinal axis, the connector housing comprising a top portion and a bottom portion spaced apart along a transverse axis perpendicular to the longitudinal axis, the connector housing holding the first and second optical fiber ferrules such that the first and second optical fiber ferrules are exposed through the front end portion for making an optical connection and the first and second optical fiber ferrules are spaced apart from one another along the transverse axis,

a depressible latch above the top portion of the connector housing; and

an elongate arm connected to the connector housing above the top portion and configured to be pulled to actuate the depressible latch;

wherein the connector housing includes a front body and a back body;

wherein the front body includes a recess and the back body includes a protrusion received in the recess to connect the back body to the front body.

23. An optical fiber connector comprising:

a multi-fiber ferrule configured to terminate a plurality of optical fibers;

a connector housing having a front end portion and a rear end portion spaced apart along a longitudinal axis, the connector housing comprising a top portion and a

bottom portion spaced apart along a transverse axis perpendicular to the longitudinal axis, the connector housing being configured to hold the multi-fiber ferrule such that the multi-fiber ferrule is exposed through the front end portion for making an optical connection and the plurality of optical fibers are spaced apart from one another in a row extending parallel to the transverse axis,

a depressible latch above the top portion of the connector housing; and

an elongate arm connected to the connector housing above the top portion and configured to be pulled to actuate the depressible latch;

wherein the connector housing comprises a guide connecting the elongate arm to the optical fiber connector.

24. The optical fiber connector as set forth in claim **23**, wherein the guide defines a groove extending along the longitudinal axis.

25. The optical fiber connector as set forth in claim **24**, wherein the elongate arm is slidably received in the groove.

26. The optical fiber connector as set forth in claim **23**, wherein the elongate arm comprises a front end portion and a rear end portion spaced apart along the longitudinal axis.

27. The optical fiber connector as set forth in claim **26**, wherein the front end portion of the elongate arm defines an opening.

28. The optical fiber connector as set forth in claim **27**, wherein the depressible latch is received in the opening.

29. The optical fiber connector as set forth in claim **28**, wherein the depressible latch has a front end portion and rear end portion spaced apart along the longitudinal axis and wherein the depressible latch extends upward along the transverse axis as the depressible latch extends along the longitudinal axis from the front end portion to the rear end portion of the depressible latch.

30. The optical fiber connector as set forth in claim **29**, wherein the rear end portion of the depressible latch is spaced apart above the top portion of the connector housing along the transverse axis.

31. The optical fiber connector as set forth in claim **30**, wherein the front end portion of the elongate arm includes an edge defining a front end of the opening.

32. The optical fiber connector as set forth in claim **31**, wherein the depressible latch has an upper surface, the edge opposing the upper surface.

33. The optical fiber connector as set forth in claim **32**, wherein the elongate arm is configured to be pulled rearward along the longitudinal axis with respect to the connector housing whereby the edge slides longitudinally along the upper surface to depress the depressible latch.

34. The optical fiber connector as set forth in claim **33**, wherein the guide defines a groove extending along the longitudinal axis.

35. The optical fiber connector as set forth in claim **34**, wherein the elongate arm is slidably received in the groove.

36. The optical fiber connector as set forth in claim **34**, wherein the connector housing includes a front body and a back body.

37. The optical fiber connector as set forth in claim **36**, wherein the front body includes a recess and the back body includes a protrusion received in the recess to connect the back body to the front body.

38. The optical fiber connector as set forth in claim **37**, further comprising a single cable boot extending rearward from the connector housing.

39. An optical fiber connector comprising:

a multi-fiber ferrule configured to terminate a plurality of optical fibers;

a connector housing having a front end portion and a rear end portion spaced apart along a longitudinal axis, the connector housing comprising a top portion and a bottom portion spaced apart along a transverse axis perpendicular to the longitudinal axis, the connector housing being configured to hold the multi-fiber ferrule such that the multi-fiber ferrule is exposed through the front end portion for making an optical connection and the plurality of optical fibers are spaced apart from one another in a row extending parallel to the transverse axis,

a depressible latch above the top portion of the connector housing; and

an elongate arm connected to the connector housing above the top portion and configured to be pulled to actuate the depressible latch;

wherein the elongate arm comprises a front end portion and a rear end portion spaced apart along the longitudinal axis;

wherein the front end portion of the elongate arm defines an opening;

wherein the depressible latch is received in the opening;

wherein the depressible latch has a front end portion and rear end portion spaced apart along the longitudinal axis and wherein the depressible latch extends upward along the transverse axis as the depressible latch extends along the longitudinal axis from the front end portion to the rear end portion of the depressible latch;

wherein the rear end portion of the depressible latch is spaced apart above the top portion of the connector housing along the transverse axis;

wherein the front end portion of the elongate arm includes an edge defining a front end of the opening;

wherein the depressible latch has an upper surface, the edge opposing the upper surface:

wherein the elongate arm is configured to be pulled rearward along the longitudinal axis with respect to the connector housing whereby the edge slides longitudinally along the upper surface to depress the depressible latch.

40. An optical fiber connector comprising:

a multi-fiber ferrule configured to terminate a plurality of optical fibers;

a connector housing having a front end portion and a rear end portion spaced apart along a longitudinal axis, the connector housing comprising a top portion and a bottom portion spaced apart along a transverse axis perpendicular to the longitudinal axis, the connector housing being configured to hold the multi-fiber ferrule such that the multi-fiber ferrule is exposed through the front end portion for making an optical connection and the plurality of optical fibers are spaced apart from one another in a row extending parallel to the transverse axis,

a depressible latch above the top portion of the connector housing; and

an elongate arm connected to the connector housing above the top portion and configured to be pulled to actuate the depressible latch;

wherein the elongate arm comprises a front end portion and a rear end portion spaced apart along the longitudinal axis;

further comprising a push/pull tab extending from the rear end portion of the elongate arm.

* * * * *