US 20180224608A1

(19) United States

(12) Patent Application Publication

(10) Pub. No.: US 2018/0224608 A1

(43) Pub. Date: Aug. 9, 2018

LIU et al.

(54) **FIBER OPTIC CONNECTOR AND METHOD OF ASSEMBLING THE SAME**

(71) Applicant: **ADC Telecommunications (Shanghai) Distribution Co., Ltd.**, Shanghai (CN)

(72) Inventors: **Lei LIU**, Hangzhou City (CN); **Zhaoyang TONG**, Shanghai (CN)

(21) Appl. No.: **15/875,199**

(22) Filed: **Jan. 19, 2018**

Related U.S. Application Data

(63) Continuation of application No. 15/118,932, filed on Aug. 15, 2016, now Pat. No. 9,910,224, filed as application No. PCT/IB2015/050901 on Feb. 6, 2015.

(30) **Foreign Application Priority Data**

Feb. 14, 2014 (CN) 2014100516706

Publication Classification

(51) **Int. Cl.**
G02B 6/38 (2006.01)

(52) **U.S. Cl.**
CPC ***G02B 6/3821*** (2013.01); ***G02B 6/3887*** (2013.01); ***G02B 6/3869*** (2013.01); ***G02B 6/3851*** (2013.01); ***G02B 6/3849*** (2013.01)

(57) **ABSTRACT**

The present invention discloses a fiber optic connector comprises: a ferrule assembly; a spring seat provided behind the ferrule assembly; and a spring provided between the ferrule assembly and the spring seat. The spring seat has a receiving chamber having an insertion port through which a portion of the ferrule assembly is inserted into the receiving chamber; wherein the ferrule assembly is pre-assembled into the receiving chamber of the spring seat in a way that the ferrule assembly is held to be movably engaged with the spring seat. The to spring is fitted and compressed in the receiving chamber. As a result, the ferrule assembly, the spring seat and the spring are pre-assembled into an integral assembly before being inserting into a connector housing. All components of the connector except for the housing may be smoothly pulled through a small long pipe as a whole. After being pulled through the pipe, all components of the connector except for the housing may be easily and quickly inserted into the housing as a whole at one time.

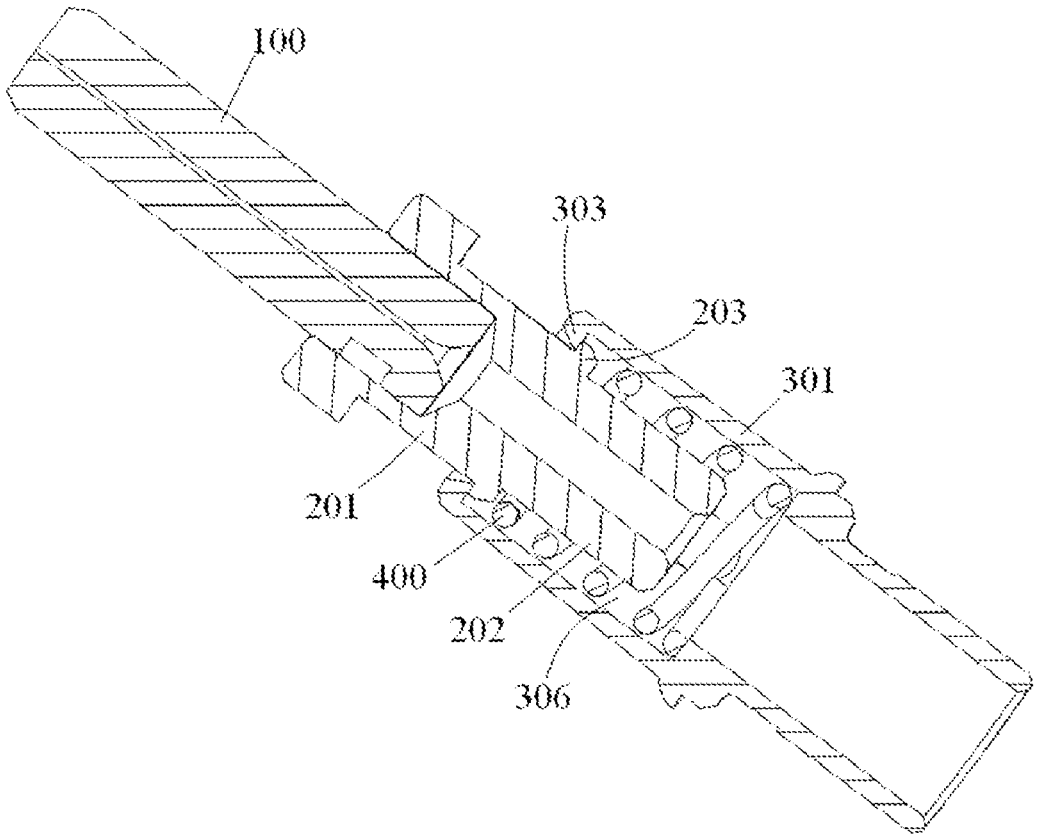

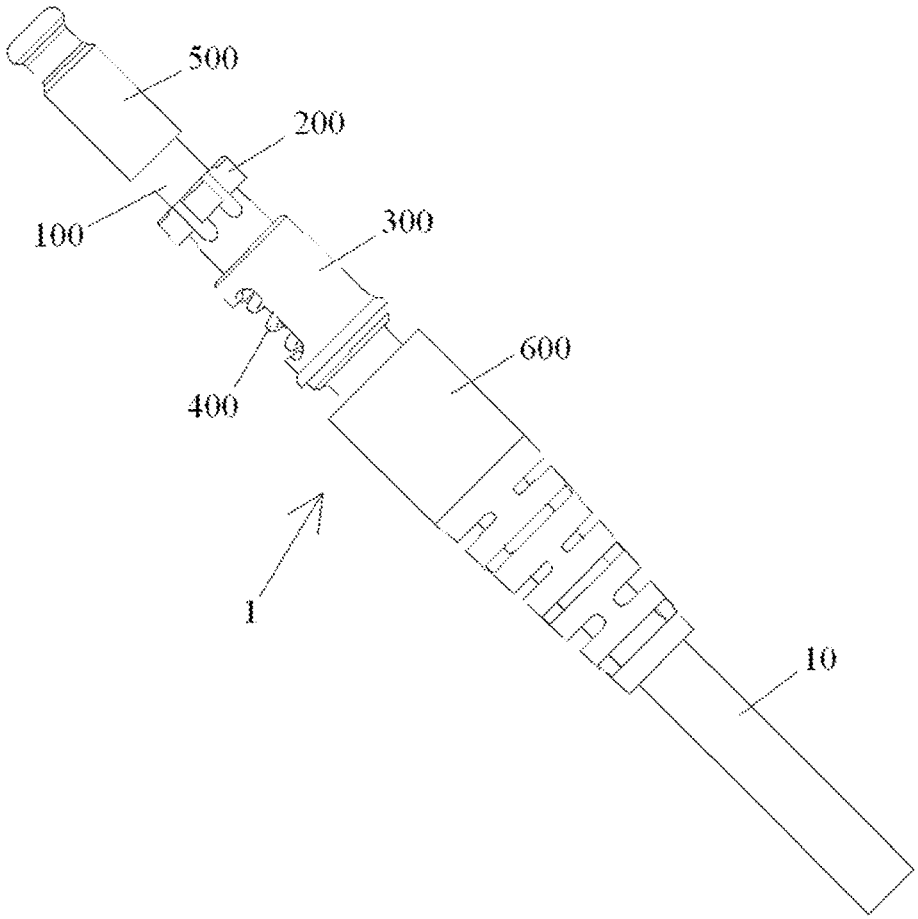

Fig.1

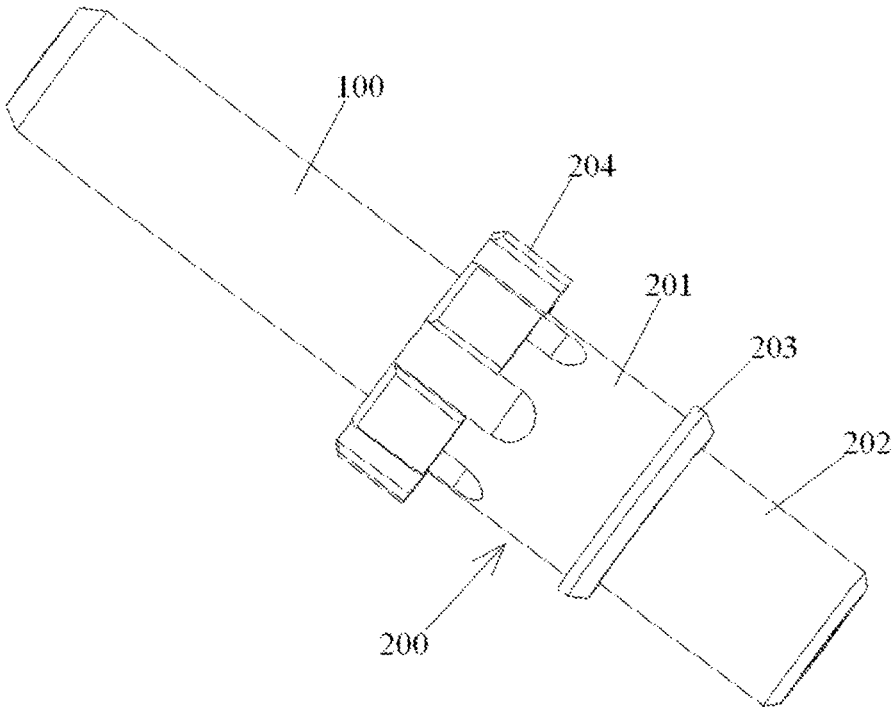

Fig.2

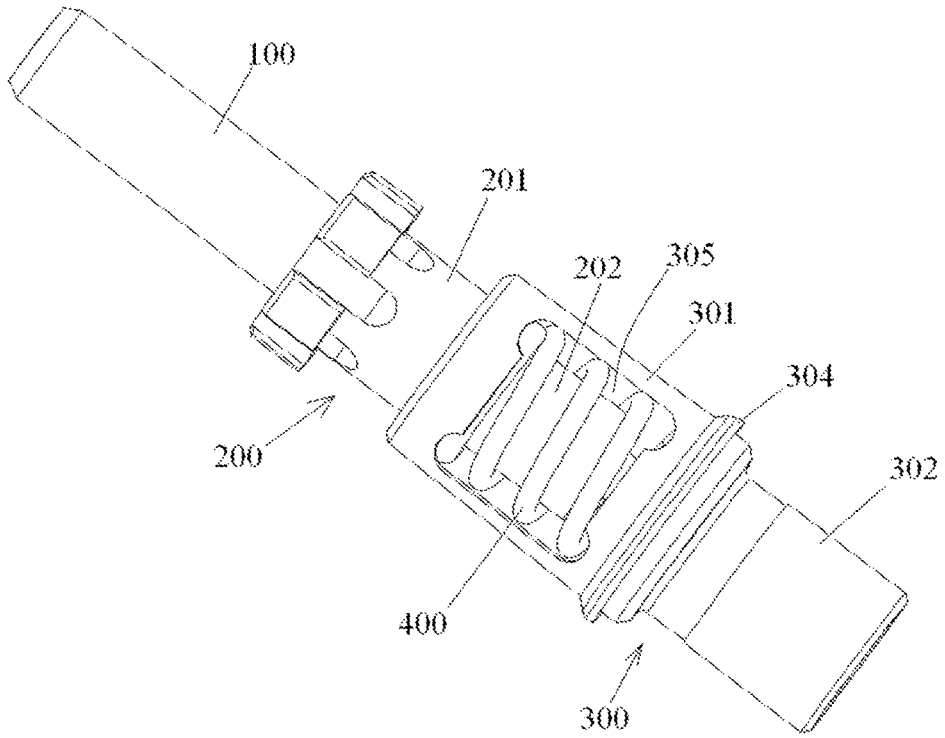
100
201
202
305
301
304
200
302
400
300

Fig.3

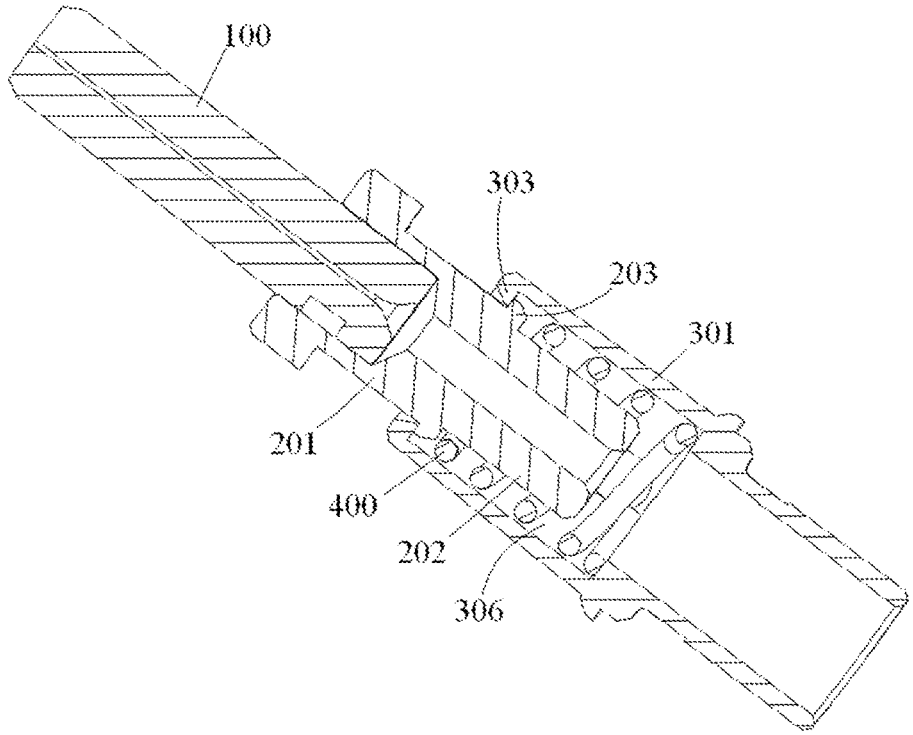
100
303
203
301
201
400
202
306

Fig.4

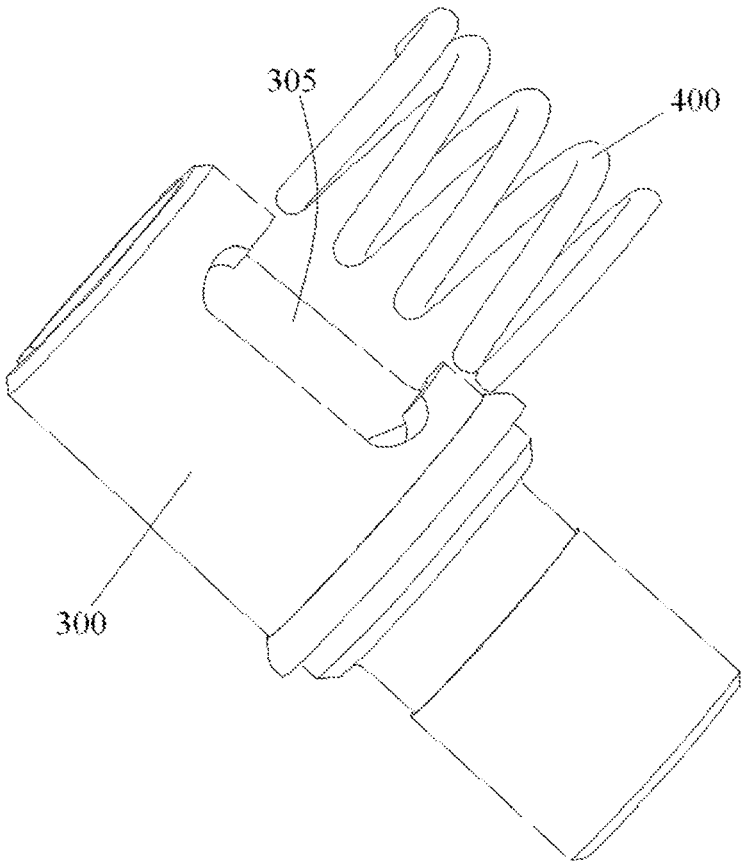

Fig.5

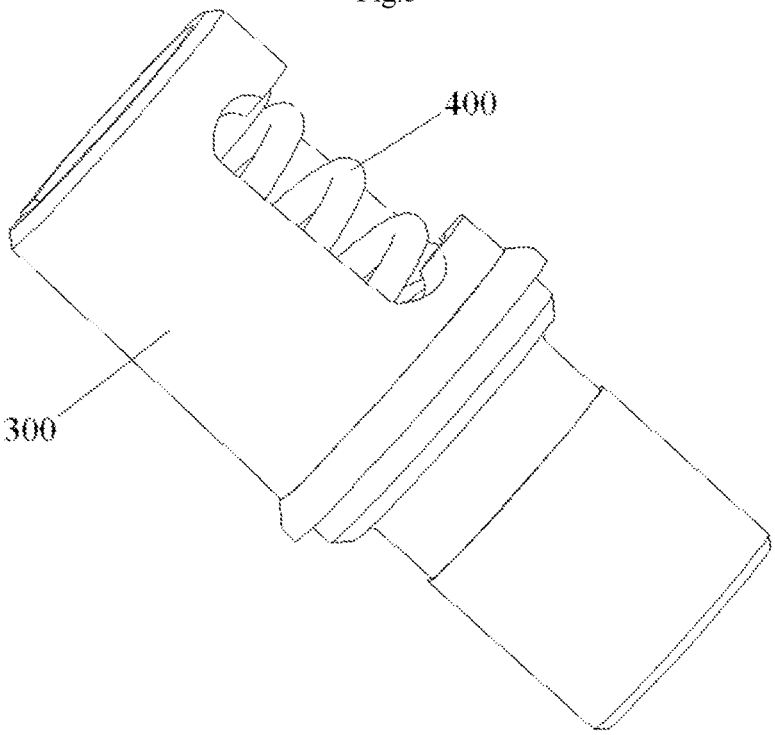

Fig.6

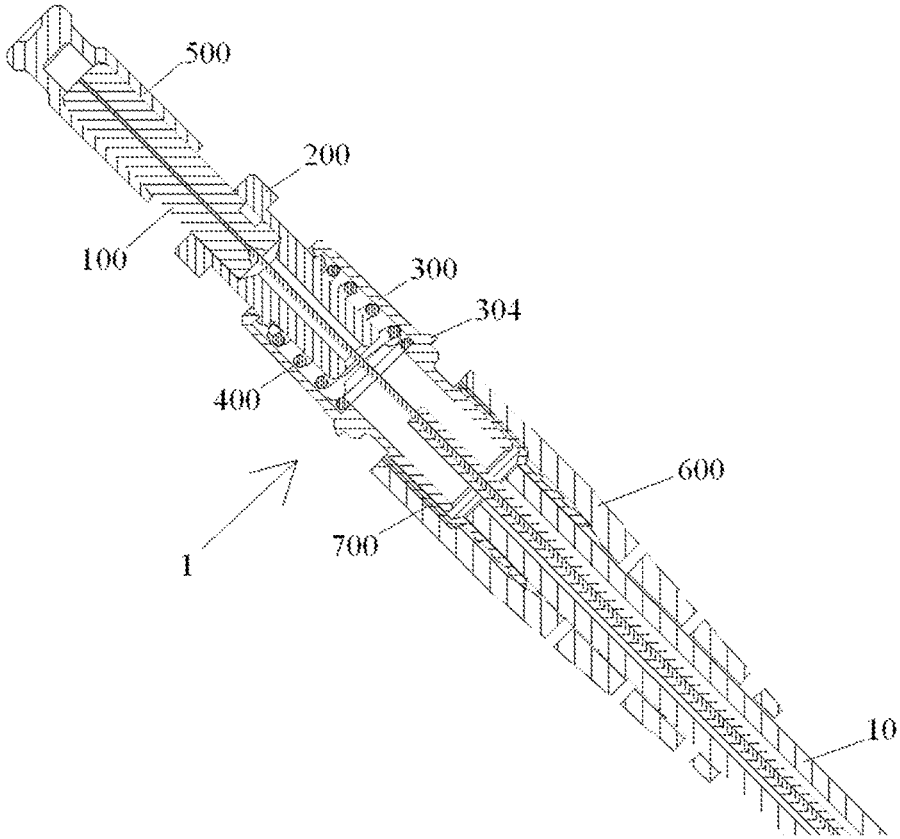

Fig.7

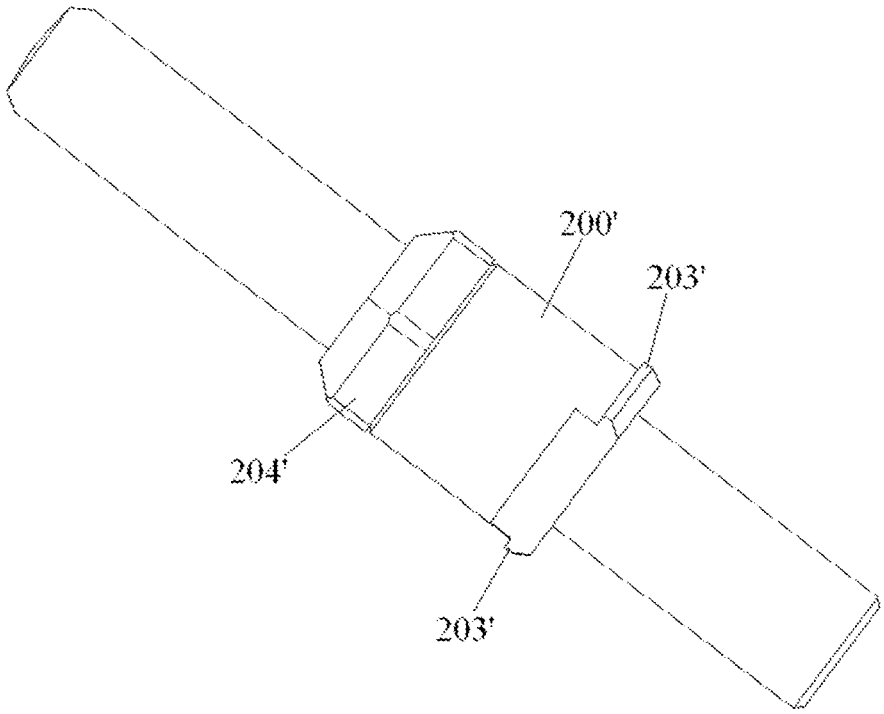

Fig.8

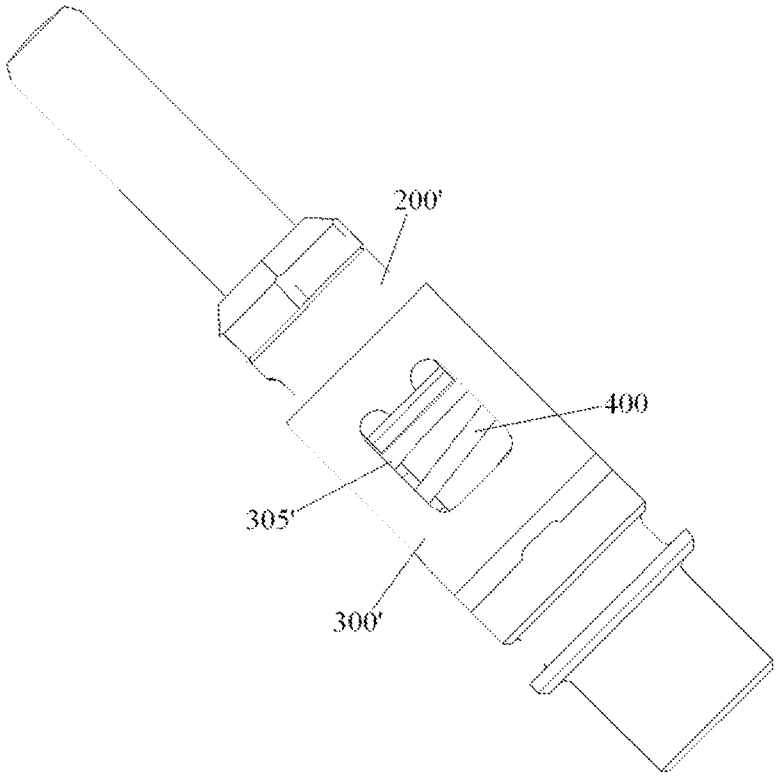

Fig.9

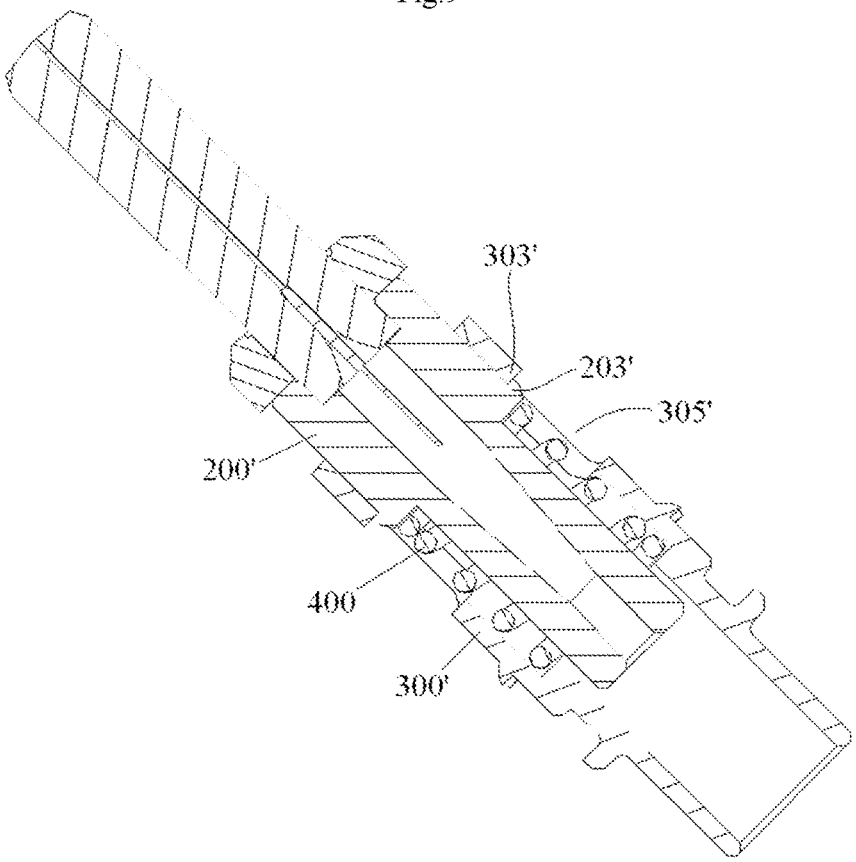

Fig.10

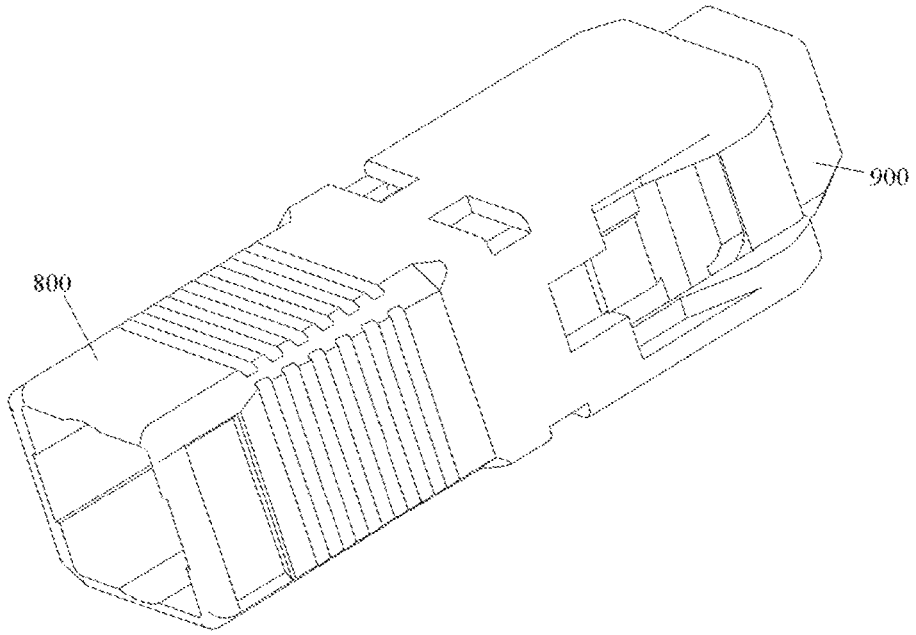

Fig.11

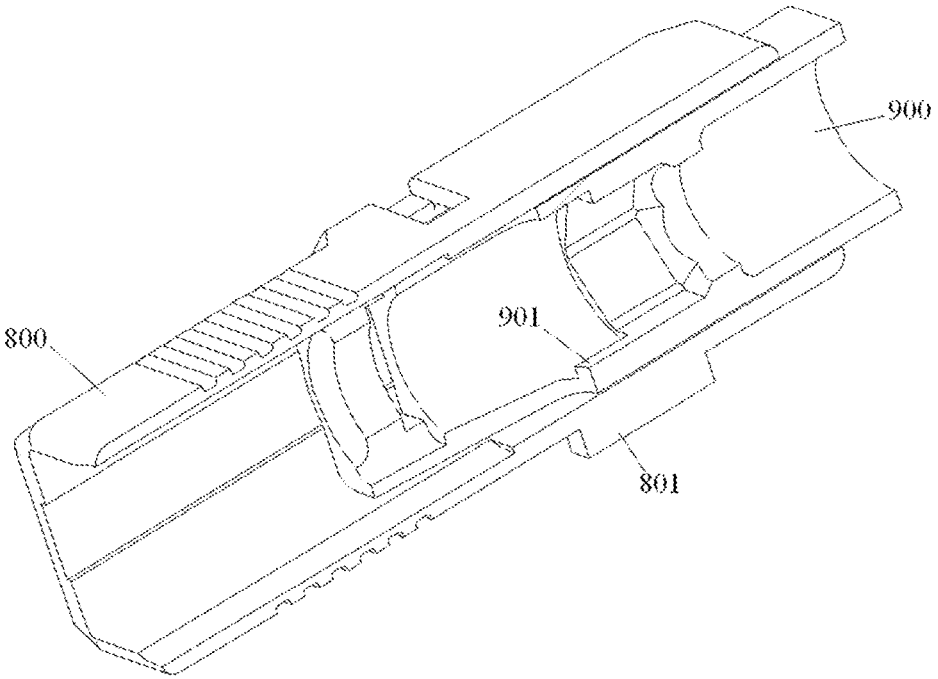

Fig.12

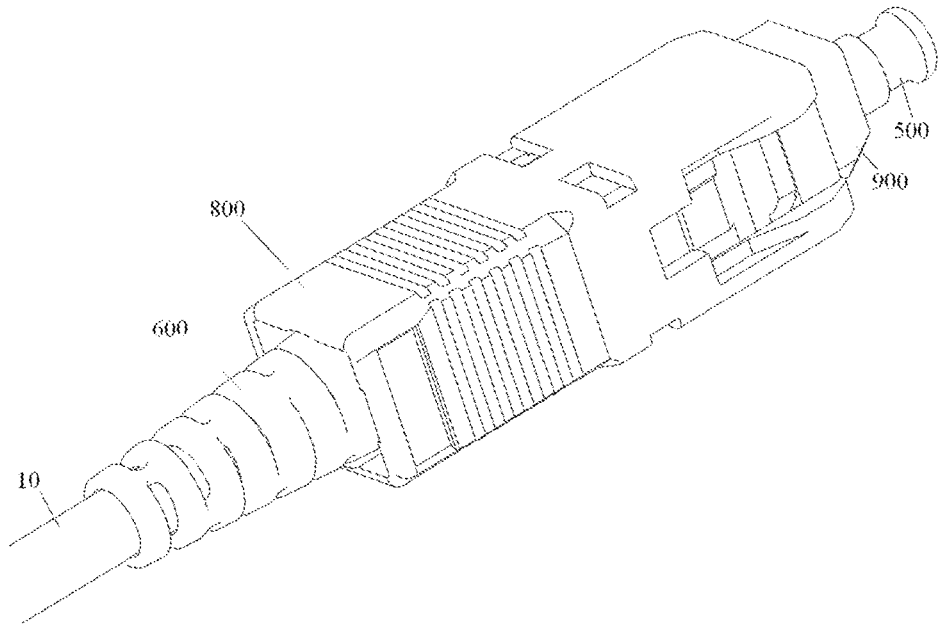

Fig.13

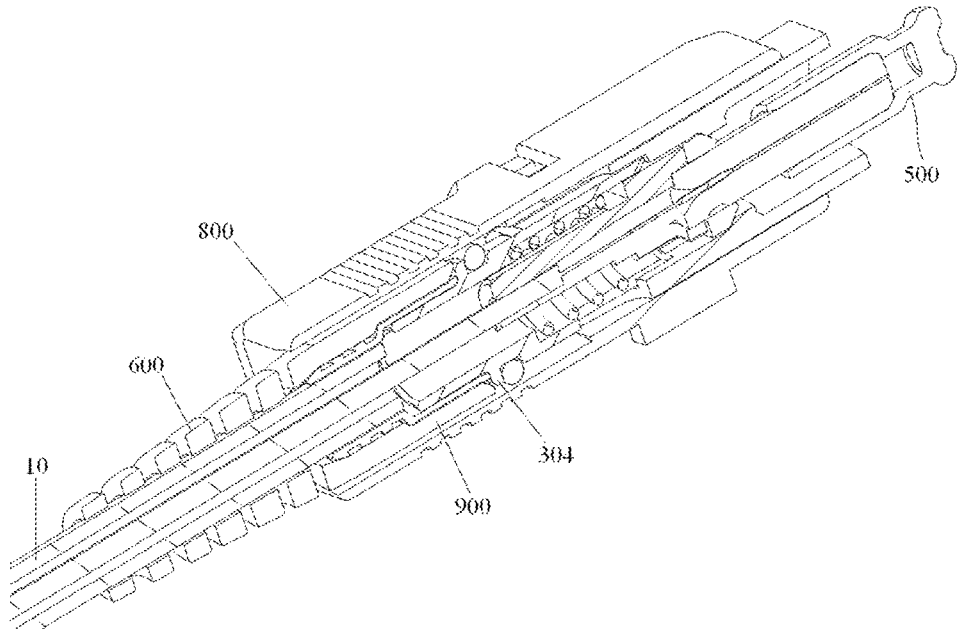

Fig.14

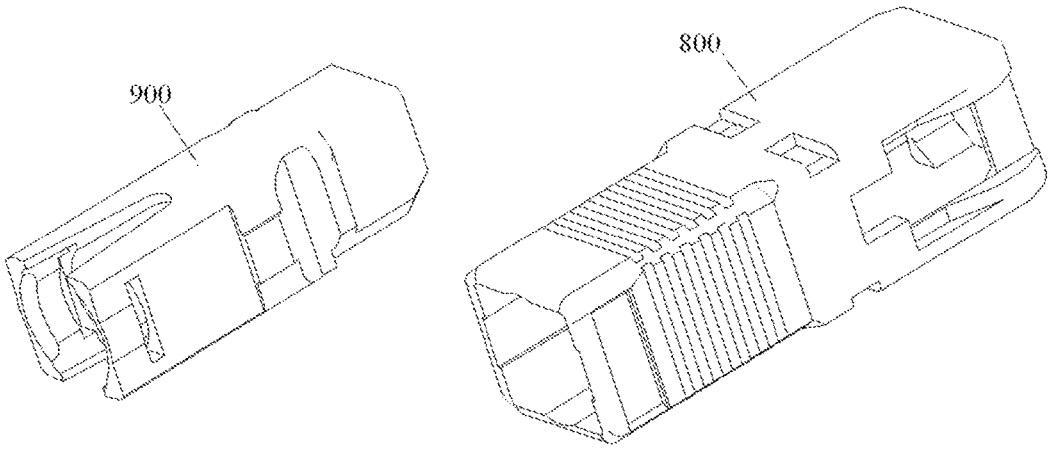

Fig.15

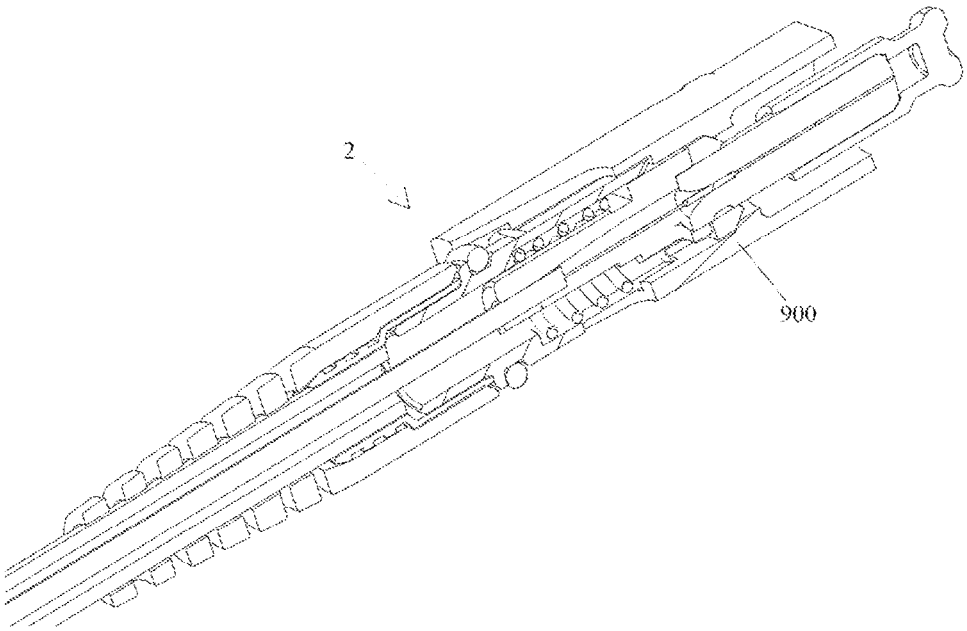

Fig.16

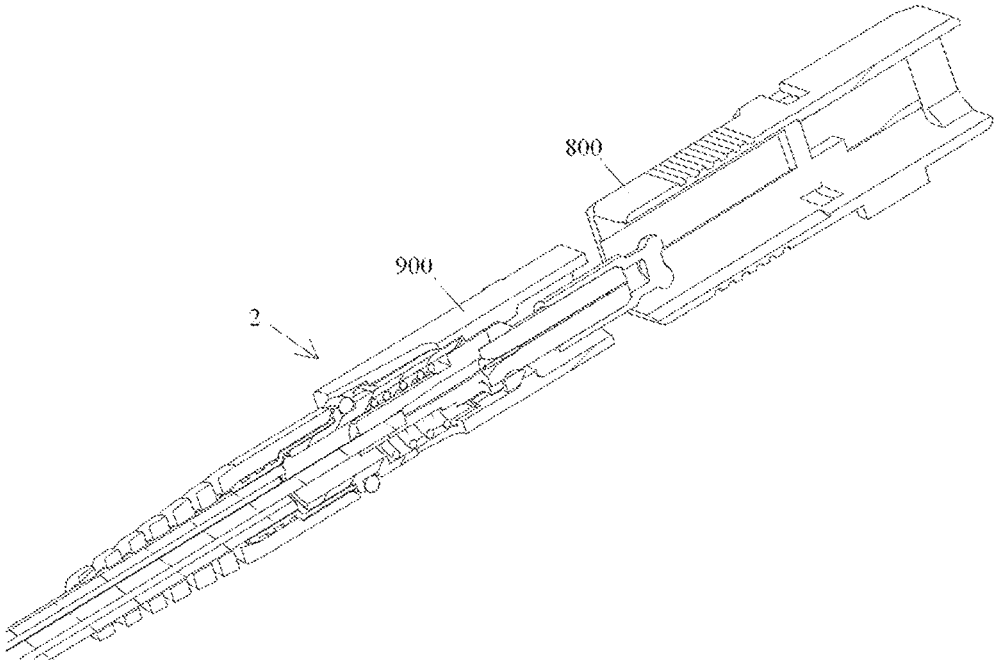

Fig.17

FIBER OPTIC CONNECTOR AND METHOD OF ASSEMBLING THE SAME

CROSS-REFERENCE TO RELATED APPLICATION

[0001] This application is a Continuation of U.S. patent application Ser. No. 15/118,932 filed on 15 Aug. 2016, which is a National stage for PCT/IB2015/050901, filed on 6 Feb. 2015, which claims the benefit of Chinese Patent Application No. 2014100516706 filed on 14 Feb. 2014 in the State Intellectual Property Office of China and which applications are incorporated herein by reference. To the extent appropriate, a claim of priority is made to each of the above disclosed applications.

BACKGROUND OF THE INVENTION

Field of the Invention

[0002] The present invention relates to a fiber optic connector and a method of assembling the fiber optic connector.

Description of the Related Art

[0003] In prior art, optical cables/fibers generally are optically coupled by following ways of:

[0004] 1) Splicing Optical Fibers in Field

[0005] The way of splicing the optical cables/fibers generally comprises steps of: Firstly, processing ends of the optical fibers (including peeling off the optical cable, cleaning and cutting the optical fiber of the optical cable); Secondly, manually or automatically setting optimum splicing parameters of a splicing machine and relative positions of the optical fibers to be spliced based on material and type of the optical fiber; Thirdly, discharging an electric arc with the splicing machine to fuse the ends of the optical fibers, and slowly and linearly pushing the optical fibers toward each other to optically couple the optical fibers; Finally, contracting a heat shrinkable tube on a coupled joint of the optical fibers to protect the coupled joint, and winding the optical fibers to finish all splicing operations in the field. In this case, the splicing properties (including optical attenuation, echo, and long term reliability, etc.) of the optical fibers are in different degrees depended on various factors, such as, operation level of a splicing operator, operation steps, fiber winding level, cleanliness of electrodes of the splicing machine, splicing parameters, cleanliness of working environment, and so on. In addition, it is necessary to use various expensive apparatus, for example, high precision cutting tool, splicing machine or the like, to perform the splicing of the optical fibers in the field.

[0006] 2) Cold Coupling Optical Fibers

[0007] In this solution, two processed optical fibers are fixed in a high precision V-shaped or U-shaped groove and aligned to each other. In addition, an optical matching paste is filled in the V-shaped or U-shaped groove to fill a gap between end surfaces of the two optical fibers. Compared with splicing, the cold coupling is relatively simpler and quicker, because the cold coupling does not need an electric power supply and a heat shrinkable tube to protect the spliced joint. However, the cold coupling is largely depended on cutting quality of the end surfaces of the optical fibers and the optical matching paste. If the cutting quality is poor, it decreases the coupling properties (including optical attenuation, echo, and long term reliability, etc.). Furthermore, as for the cold coupling with the V-shaped or U-shaped groove, the coupling loss is increased with the variation of the temperature. With the passage of time, because of the opened V-shaped or U-shaped groove, flowing away, pollution and aging occurring in the optical matching paste may cause the insertion loss to become larger or even reduce the optical signal to zero. Thereby, the cold coupling has a poor stability and long-term reliability.

[0008] 3) Assembling Connector in Field

[0009] In the way of assembling connector in field, an optical fiber is pre-embedded in a ferrule. At one end of ferrule, an end surface of a standard connector is pre-polished, and at the other end of the ferrule, the pre-embedded fiber is placed in a high precision V-shaped groove with an optical matching paste filled therein. During assembling the connector in the field, the incoming optical fiber/cable is processed in the field (for example, opening the cable, peeling the fiber, cleaning and cutting the fiber), and inserted into the rear end of the connector until the end surface of incoming fiber abuts against the end surface of the pre-embedded fiber in the V-shaped or U-shaped groove, then the fibers are fixed by an external mechanical element. The way of assembling connector in field has a relatively high cost. In addition, it is necessary to use a special tool and an operation guide provided by the connector manufacturer. Also, because the optical matching paste is used, it has a poor stability and long-term reliability.

[0010] 4) Integral Cable/Fiber Assembly in Factory

[0011] The integral cable/fiber assembly is manufactured in the factory. As for this way, it is reliable and is easy to use. However, it cannot be applied in a limited space, for example, in an application of fiber to the home or to the resident, it often needs to pull the cable/fiber assembly through a narrow pipe, especially a pipe in which other cables are paved.

[0012] In the above ways in the prior art, there are high requirements on the tool and the operator to assemble the connector in the field. Furthermore, in the prior art, before assembling a ferrule assembly, a spring and a spring seat into the connector housing, the ferrule assembly, the spring and the spring seat are separated from each other and cannot be pre-assembled together. Thereby, in the prior art, the ferrule assembly, the spring and the spring seat must be assembled into the connector housing one by one. Such way of assembling the connector is only adapted to assemble the ferrule assembly, the spring and the spring seat into the connector housing in the factory, and is not adapted to assemble the ferrule assembly, the spring and the spring seat into the connector housing in the field. As a result, the completely assembled connector in the factory cannot be pulled through the narrow pipe in the field, because the completely assembled connector has a large profile size.

SUMMARY OF THE INVENTION

[0013] The present invention has been made to overcome or alleviate at least one aspect of the above mentioned disadvantages.

[0014] According to an object of the present invention, there is provided a fiber optic connector and a method of assembling the fiber optic connector, wherein a ferrule assembly, a spring and a spring seat are adapted to be pre-assembled to an integral cable assembly having a profile size less than that of a connector housing. In this way, the cable assembly with less profile size may be easily pulled

through an elongated pipe in the field. Furthermore, after pulled through the elongated pipe, the cable assembly as a whole may be quickly assembled into the connector housing in the field.

[0015] According to another object of the present invention, there is provided a fiber optic connector and a method of assembling the fiber optic connector, wherein all components of the connector except for a housing may be correctly and quickly assembled into the connector housing, effectively saving the assembling time and reducing mistake operations.

[0016] According to another object of the present invention, there is provided a fiber optic connector and a method of assembling the fiber optic connector, wherein all components of the connector except for a housing can be pre-assembled to an integral assembly, and an end surface of a ferrule and a fiber are protected from damage during assembling the integral assembly into the connector housing, improving the long term reliability of an interconnection of fiber optic connectors.

[0017] According to an aspect of the present invention, there is provided a fiber optic connector comprising: a ferrule assembly; a spring seat provided behind the ferrule assembly; and a spring provided between the ferrule assembly and the spring seat, wherein the spring seat has a receiving chamber having an insertion port through which a portion of the ferrule assembly is inserted into the receiving chamber; wherein the ferrule assembly is pre-assembled into the receiving chamber of the spring seat in a way that the ferrule assembly is held to be movably engaged with the spring seat, and the spring is fitted and compressed in the receiving chamber, so that the ferrule assembly, the spring seat and the spring are pre-assembled into an integral assembly before being inserting into a connector housing.

[0018] According to an exemplary embodiment of the present invention, the spring is pre-assembled in the receiving chamber together with the ferrule assembly or before pre-assembling the ferrule assembly.

[0019] According to another exemplary embodiment of the present invention, the ferrule assembly comprises: a ferrule; and a ferrule seat with a front end fixedly connected to the ferrule and a rear end assembled into the receiving chamber of the spring seat.

[0020] According to another exemplary embodiment of the present invention, the ferrule and the ferrule seat are formed into a single piece.

[0021] According to another exemplary embodiment of the present invention, a protrusion is formed on an outer circumference of the ferrule seat; a backstop portion is formed in the receiving chamber of the spring seat; and the backstop portion is configured to abut against the protrusion after the rear end of the ferrule seat is assembled into the receiving chamber of the spring seat, so as to prevent the ferrule seat from being withdrawn from the spring seat.

[0022] According to another exemplary embodiment of the present invention, the protrusion is configured to continuously surround a full circle of the outer circumference of the ferrule seat.

[0023] According to another exemplary embodiment of the present invention, the backstop portion is configured to be a stopping flange, extending inwardly, formed at an edge of the insertion port of the receiving chamber.

[0024] According to another exemplary embodiment of the present invention, the backstop portion is configured to be an elastic snapper formed in the receiving chamber.

[0025] According to another exemplary embodiment of the present invention, an opening is formed in the sidewall of the receiving chamber of the spring seat, and the spring is pre-assembled in the receiving chamber through the opening.

[0026] According to another exemplary embodiment of the present invention, the protrusion comprises a plurality of local protrusions, separated from each other, on the outer circumference of the ferrule seat.

[0027] According to another exemplary embodiment of the present invention, a plurality of slots are formed in the sidewall of the receiving chamber of the spring seat, and the backstop portion is directly composed of front edges of the slots.

[0028] According to another exemplary embodiment of the present invention, the spring is pre-assembled into the receiving chamber through the insertion port of the spring seat.

[0029] According to another exemplary embodiment of the present invention, the fiber optic connector further comprises: a dust cap fitted on a front end of the ferrule; a crimp ring configured to crimp a strengthening element of an optical cable on a rear end of the spring seat; and a stress relief tube sleeved on the crimp ring crimped on the rear end of the spring seat.

[0030] According to another exemplary embodiment of the present invention, the optical cable, the dust cap, the ferrule assembly, the spring seat, the spring, the crimp ring and the stress relief tube are pre-assembled together to form a first cable connection assembly as a whole before inserting into the connector housing.

[0031] According to another exemplary embodiment of the present invention, the connector housing comprises: an outer housing; and an inner housing adapted to be fitted in the outer housing.

[0032] According to another exemplary embodiment of the present invention, the first cable connection assembly is inserted into the connector housing until a protruding portion formed on the spring seat is snap-fitted in a recess formed in the inner housing, so as to assemble the first cable connection assembly and the connector housing together; and the dust cap fitted on the front end of the ferrule extends out through a hole formed in a front portion of the connector housing during inserting the first cable connection assembly into the connector housing, so as to protect a front end surface of the ferrule from damage.

[0033] According to another exemplary embodiment of the present invention, a first positioning key is formed on an inner wall of the inner housing, and a positioning slot, matched with the first positioning key, is formed in the ferrule seat, to ensure that the first cable connection assembly is correctly inserted into the connector housing.

[0034] According to another exemplary embodiment of the present invention, the first cable connection assembly is pre-assembled into the inner housing to form a second cable connection assembly, and the second cable connection assembly as a whole is inserted into the outer housing to form a complete fiber optic connector.

[0035] According to another aspect of the present invention, there is provided a method of assembling a fiber optic connector, comprising steps of:

[0036] S**10**: pre-assembling all components of the fiber optic connector, except for a connector housing, together to form a first cable connection assembly as a whole; and

[0037] S**20**: inserting the first cable connection assembly as a whole into the connector housing to form a complete fiber optic connector,

[0038] wherein the fiber optic connector comprises a ferrule assembly, a spring seat, a spring, and the connector housing, and

[0039] wherein the ferrule assembly is pre-assembled into a receiving chamber of the spring seat in a way that the ferrule assembly may be moved relative to the spring seat and cannot be separated from the spring seat, so as to compress the spring in the receiving chamber.

[0040] According to an exemplary embodiment of the present invention, the above method further comprises a step of: pulling the first cable connection assembly through an elongated pipe before the step S**20**.

[0041] According to another aspect of the present invention, there is provided a method of assembling a fiber optic connector having an inner housing and an outer housing, the method comprising steps of:

[0042] S**100**: pre-assembling all components of the fiber optic connector, except for the outer housing, together to form a second cable connection assembly as a whole; and

[0043] S**200**: inserting the second cable connection assembly as a whole into the outer housing to form a complete fiber optic connector,

[0044] wherein the fiber optic connector further comprises a ferrule assembly, a spring seat and a spring, and

[0045] wherein the ferrule assembly is pre-assembled into a receiving chamber of the spring seat in a way that the ferrule assembly is held to be movably engaged with the spring seat, so as to compress the spring in the receiving chamber.

[0046] According to an exemplary embodiment of the present invention, the above method further comprises a step of: pulling the second cable connection assembly through an elongated pipe before the step S**200**.

[0047] In the fiber optic connector and the method of assembling the fiber optic connector according to the above exemplary embodiments of the present invention, before being inserted into a housing of the connector, the ferrule assembly, the spring seat and the spring may be pre-assembled together to form an integral assembly having a size less than that of a housing of the connector. Accordingly, all components of the connector except for the housing may be smoothly pulled through a small long pipe as a whole. Furthermore, after being pulled through the pipe, all components of the connector except for the housing may be easily and quickly inserted into the housing as a whole at one time, saving the assembly time, avoiding mistake operations, effectively preventing the warp of the spring, protecting the end surface of the ferrule and the fiber from being damaged during the assembling process, increasing the long term reliability of the interconnection of the fiber optic connectors.

BRIEF DESCRIPTION OF THE DRAWINGS

[0048] The above and other features of the present invention will become more apparent by describing in detail exemplary embodiments thereof with reference to the accompanying drawings, in which:

[0049] FIG. **1** is an illustrative perspective view of a first cable connection assembly formed by assembling all components of a fiber optic connector except for a housing according to an exemplary embodiment of the present invention;

[0050] FIG. **2** is an illustrative view of a ferrule assembly of FIG. **1**;

[0051] FIG. **3** is an illustrative view of a ferrule assembly, a spring and a spring seat pre-assembled together;

[0052] FIG. **4** is an illustrative cross section view of the ferrule assembly, the spring and the spring seat pre-assembled together shown in FIG. **3**;

[0053] FIG. **5** is an illustrative view of the spring seat and the spring shown in FIG. **3** before the spring is mounted in the spring seat;

[0054] FIG. **6** is an illustrative view of the spring seat and the spring shown in FIG. **3** after the spring is mounted in the spring seat;

[0055] FIG. **7** is an illustrative cross section view of the first cable connection assembly shown in FIG. **1**;

[0056] FIG. **8** is an illustrative view of a ferrule assembly according to another exemplary embodiment of the present invention;

[0057] FIG. **9** is an illustrative view of a ferrule assembly, a spring and a spring seat pre-assembled together according to another exemplary embodiment of the present invention;

[0058] FIG. **10** is an illustrative cross section view of the ferrule assembly, the spring and the spring seat pre-assembled together shown in FIG. **9**;

[0059] FIG. **11** is an illustrative perspective view of a connector housing according to an exemplary embodiment of the present invention;

[0060] FIG. **12** is an illustrative cross section view of the connector housing of FIG. **11**;

[0061] FIG. **13** is an illustrative perspective view of a fiber optic connector formed by assembling the first cable connection assembly of FIG. **1** into the connector housing of FIG. **12**;

[0062] FIG. **14** is an illustrative cross section view of the fiber optic connector of FIG. **13**;

[0063] FIG. **15** is an illustrative exploded view of a connector housing according to an exemplary embodiment of the present invention;

[0064] FIG. **16** is an illustrative perspective view of a second cable connection assembly formed by assembling the first cable connection assembly of FIG. **1** into an inner housing of the connector housing of FIG. **15**; and

[0065] FIG. **17** is an illustrative perspective view of a fiber optic connector formed by assembling the second cable connection assembly of FIG. **16** into an outer housing of the connector housing of FIG. **15**.

DETAILED DESCRIPTION OF PREFERRED EMBODIMENTS OF THE INVENTION

[0066] Exemplary embodiments of the present disclosure will be described hereinafter in detail with reference to the attached drawings, wherein the like reference numerals refer to the like elements. The present disclosure may, however, be embodied in many different forms and should not be construed as being limited to the embodiment set forth herein; rather, these embodiments are provided so that the present disclosure will be thorough and complete, and will fully convey the concept of the disclosure to those skilled in the art.

[0067] In the following detailed description, for purposes of explanation, numerous specific details are set forth in order to provide a thorough understanding of the disclosed embodiments. It will be apparent, however, that one or more embodiments may be practiced without these specific details. In other instances, well-known structures and devices are schematically shown in order to simplify the drawing.

[0068] According to a general concept of the present invention, there is provided a fiber optic connector comprising: a ferrule assembly; a spring seat provided behind the ferrule assembly; and a spring provided between the ferrule assembly and the spring seat, wherein the spring seat has a receiving chamber having an insertion port through which a portion of the ferrule assembly is inserted into the receiving chamber; wherein the ferrule assembly is pre-assembled into the receiving chamber of the spring seat in a way that the ferrule assembly is held to be movably engaged with the spring seat, that is, the ferrule assembly may be moved relative to the spring seat and cannot be separated from the spring seat, and the spring is fitted and compressed in the receiving chamber, so that the ferrule assembly, the spring seat and the spring are pre-assembled into an integral assembly before being inserting into a connector housing.

[0069] FIG. **1** is an illustrative perspective view of a first cable connection assembly **1** formed by assembling all components of a fiber optic connector except for a housing according to an exemplary embodiment of the present invention; FIG. **7** is an illustrative cross section view of the first cable connection assembly **1** shown in FIG. **1**.

[0070] In an exemplary embodiment of the present invention, as shown in FIGS. **1** and **7**, the fiber optic connector mainly comprises a connector housing (see FIG. **11**, however, not shown in FIG. **1**), a ferrule **100**, a ferrule seat **200**, a spring seat **300**, a spring **400**, a dust cap **500**, a stress relief tube **600**, a crimp ring **700** and an optical cable **10**.

[0071] As shown in FIGS. **1** and **7**, the dust cap **500** is fitted on a front end (distal end) of the ferrule **100**, so as to protect a front end surface of the ferrule **100** and a fiber of the optical cable **10**. A rear end (proximal end) of the ferrule **100** is fixed to the ferrule seat **200**. The spring **400** is mounted in the spring seat **300**. A rear end of the ferrule seat **200** is assembled into the spring seat **300** and compresses the spring **400** in the spring seat **300**. A strengthening element (not shown, for example, Kevlar elements) of the optical cable **10** is crimped on a rear end **302** (FIG. **3**) of the spring seat **300** by the crimp ring **700**. The stress relief tube **600** is sleeved on the crimp ring **700**. In this way, the first cable connection assembly **1** as shown in FIG. **1** is obtained.

[0072] FIG. **2** is an illustrative view of a ferrule assembly of FIG. **1**; FIG. **3** is an illustrative view of a ferrule assembly, a spring **400** and a spring seat **300** pre-assembled together; and FIG. **4** is an illustrative cross section view of the ferrule assembly, the spring **400** and the spring seat **300** pre-assembled together shown in FIG. **3**.

[0073] Hereafter, it will describe in detail the structures of the ferrule seat **200**, the spring **400** and the spring seat **300** with reference to FIGS. **2-4**.

[0074] As shown in FIG. **4**, the spring seat **300** has a receiving chamber **306** having an insertion port facing the ferrule seat **200**. The rear end of the ferrule seat **200** is adapted to be inserted into the receiving chamber **306** through the insertion port.

[0075] As shown in FIGS. **2-4**, the ferrule seat **200** comprises keys **204** adjacent to the ferrule **100**, a first cylindrical portion **201** provided at rear side of the keys **204**, a second cylindrical portion **202** connected to the first cylindrical portion **201**, and a protrusion **203** formed on the first cylindrical portion **201** opposite to the keys **204**.

[0076] As shown in FIGS. **2-4**, the receiving chamber **306** is formed in the front portion **301** of the spring seat **300**, and a backstop portion **303** is formed in the receiving chamber **306** of the spring seat **300**. In this way, when the rear end of the ferrule seat **200** is inserted into the receiving chamber **306** of the spring seat **300**, the backstop portion **303** abuts against the protrusion **203**, so as to prevent the ferrule seat **200** from being disengaged from the spring seat **300**.

[0077] As shown in FIGS. **2-4**, the second cylindrical portion **202** of the ferrule seat **200** has an outer diameter less than that of the first cylindrical portion **201** and less than an inner diameter of the spring **400**. In this way, the second cylindrical portion **202** is capable of being inserted into the receiving chamber of the spring seat **300** and passing through the spring **400**.

[0078] As shown in FIGS. **2-4**, the protrusion **203** of the ferrule seat **200** has an outer diameter slightly larger than an inner diameter of the insertion port of the spring seat **300**. Thereby, during inserting the rear end of the ferrule seat **200** into the receiving chamber **306** of the spring seat **300**, the insertion port of the spring seat **300** is expanded outward under the action of the protrusion **203**, to allow the protrusion **203** to enter into the receiving chamber **306**. Once the protrusion **203** enters into the receiving chamber **306**, the protrusion **203** compresses the spring **300** in the receiving chamber **306** and abuts against the backstop portion **303**, which has been returned to its original position, under the action of the spring **300**. In this way, the ferrule seat **200** cannot be withdrawn from the receiving chamber **306**.

[0079] As shown in FIGS. **2-4**, the first cylindrical portion **201** of the ferrule seat **200** has an outer diameter less than an inner diameter of the receiving chamber **306**. Thereby, the ferrule seat **200** can be moved forward and backward in the receiving chamber **306** of the spring seat **300** by a predetermined distance, but cannot be disengaged from the receiving chamber **306** of the spring seat **300** due to engagement of the backstop portion **303** and the protrusion **203**. In this way, the ferrule assembly, the spring seat **300** and the spring **400** are pre-assembled into an integral assembly before being inserting into the connector housing.

[0080] FIG. **5** is an illustrative view of the spring seat **300** and the spring **400** shown in FIG. **3** before the spring is mounted in the spring seat **300**; and FIG. **6** is an illustrative view of the spring seat **300** and the spring **400** shown in FIG. **3** after the spring **400** is mounted in the spring seat **300**.

[0081] As shown in FIGS. **5** and **6**, an opening **305** is formed in the sidewall of the receiving chamber **306** of the spring seat **300**. By compressing the spring **400** to reduce the length of the spring **400**, the spring **400** can be mounted in the receiving chamber **306** through the opening **305**.

[0082] In an exemplary embodiment, as shown in FIGS. **2-4**, the protrusion **203** is configured to continuously surround a full circle of the outer circumference of the ferrule seat **200**. The backstop portion **303** is configured to be a stopping flange, extending inwardly, formed at an edge of the insertion port of the receiving chamber **306**.

[0083] FIG. **8** is an illustrative view of a ferrule assembly according to another exemplary embodiment of the present

invention; FIG. **9** is an illustrative view of a ferrule assembly, a spring and a spring seat pre-assembled together according to another exemplary embodiment of the present invention; and FIG. **10** is an illustrative cross section view of the ferrule assembly, the spring and the spring seat pre-assembled together shown in FIG. **9**.

[0084] As shown in FIGS. **8-10**, a plurality of local protrusions **203'**, separated from each other at a predetermined interval, are formed on the outer circumference of the ferrule seat **200'**. A plurality of slots **305'** are formed in the sidewall of the receiving chamber of the spring seat **300'**, and the backstop portion **303'** is directly composed of front edges of the slots **305'**. When the rear end of the ferrule seat **200'** is inserted into the receiving chamber of the spring seat **300'**, the plurality of local protrusions **203'** are received in the plurality of slots **305'** and abut against the front edges of the slots **305'** under the action of the spring **400**. In this way, it can prevent the ferrule seat **200'** from being withdrawn from the receiving chamber of the spring seat **300'**.

[0085] Although it has shown two different configurations for assembling the ferrule seat **200** and the spring seat **300** together, but the present invention is not limited to the illustrated embodiments, for example, the backstop portion **303** may be an elastic snapper formed in the receiving chamber **306** as long as it can prevent the ferrule seat **200** from being withdrawn from the spring seat **300**.

[0086] FIG. **11** is an illustrative perspective view of a connector housing according to an exemplary embodiment of the present invention; FIG. **12** is an illustrative cross section view of the connector housing of FIG. **11**; FIG. **13** is an illustrative perspective view of a fiber optic connector formed by assembling the first cable connection assembly of FIG. **1** into the connector housing of FIG. **12**; and FIG. **14** is an illustrative cross section view of the fiber optic connector of FIG. **13**.

[0087] As shown in FIGS. **11-14**, in an exemplary embodiment, before being inserting into the connector housing, the optical cable **10**, the dust cap **500**, the ferrule assembly, the spring seat **300**, the spring **400**, the crimp ring **700** and the stress relief tube **600** are pre-assembled together to form the integral first cable connection assembly **1** as shown in FIG. **1**. Then, the first cable connection assembly **1** as a whole is inserted into the connector housing until a protruding portion **304** formed on the spring seat **300** is snap-fitted in a recess formed in an inner housing **900** of the connector housing. In this way, the first cable connection assembly **1** and the connector housing are assembled together to form a complete fiber optic connector. During inserting the first cable connection assembly **1** into the connector housing, the dust cap **500** is not taken off from the first cable connection assembly **1**, and the dust cap **500** fitted on the front end of the ferrule **100** extends out through a hole formed in a front portion of the connector housing. In this way, it can effectively protect the front end surface of the ferrule **100** from damage.

[0088] As shown in FIG. **12**, a first positioning key **901** is formed on an inner wall of the inner housing **900**, and a positioning slot (not shown), matched with the first positioning key **901**, is formed in the ferrule seat **200**. Only when the positioning slot in the ferrule seat **200** is aligned to the first positioning key **901** on the inner housing **900**, the first cable connection assembly **1** may be inserted into the connector housing. Thereby, it can ensure that the first cable connection assembly **1** is correctly inserted into the connector housing.

[0089] As shown in FIG. **12**, the first positioning key **901** on the inner housing **900** is configured to align with a second positioning key **801** formed on the outer housing **800**, and the second positioning key **801** on the outer housing **800** is configured to be fitted in a positioning slot formed in an adapter (not shown) for receiving the fiber optic connector.

[0090] In the illustrated embodiment, because the dust cap **500** is pre-assembled on the front end of the ferrule **100** before the first cable connection assembly **1** is inserted into the connector housing, it can effectively protect the front end surface of the ferrule **100** and the optical fiber from damage during assembling the first cable connection assembly **1** into the connector housing.

[0091] FIG. **15** is an illustrative exploded view of a connector housing according to an exemplary embodiment of the present invention; FIG. **16** is an illustrative perspective view of a second cable connection assembly **2** formed by assembling the first cable connection assembly **1** of FIG. **1** into an inner housing **900** of the connector housing of FIG. **15**; and FIG. **17** is an illustrative perspective view of a fiber optic connector formed by assembling the second cable connection assembly **2** of FIG. **16** into an outer housing **800** of the connector housing of FIG. **15**.

[0092] As shown in FIGS. **15-17**, the connector housing comprises an outer housing **800** and an inner housing **900** adapted to be fitted in the outer housing **800**.

[0093] In an exemplary embodiment, as shown in FIGS. **15-17**, the first cable connection assembly **1** is pre-assembled into the inner housing **900** to form a second cable connection assembly **2**. Thereafter, the second cable connection assembly **2** as a whole is inserted into the outer housing **800** to form a complete fiber optic connector.

[0094] According to another exemplary embodiment, there is also disclosed a method of assembling a fiber optic connector, comprising steps of:

S**10**: pre-assembling all components of the fiber optic connector, except for a connector housing, together to form a first cable connection assembly **1** as a whole; and

[0095] S**20**: inserting the first cable connection assembly **1** as a whole into the connector housing to form a complete fiber optic connector.

[0096] The fiber optic connector comprises a ferrule assembly, a spring seat **300**, a spring **400** and the connector housing. The ferrule assembly is pre-assembled into a receiving chamber **306** of the spring seat **300** in a way that the ferrule assembly is held to be movably engaged with the spring seat, that is, the ferrule assembly may be moved relative to the spring seat **300** and cannot be separated or withdrawn from the spring seat **300**, so as to compress the spring **400** in the receiving chamber **306**.

[0097] In an exemplary embodiment of the present invention, the above method further comprises a step of: pulling the first cable connection assembly **1** through an elongated pipe before the step S**20**.

[0098] According to another exemplary embodiment, there is also disclosed a method of assembling a fiber optic connector having an inner housing **900** and an outer housing **800**, the method comprising steps of:

[0099] S**100**: pre-assembling all components of the fiber optic connector, except for the outer housing **800**, together to form a second cable connection assembly **2** as a whole; and

[0100] S**200**: inserting the second cable connection assembly **2** as a whole into the outer housing **800** to form a complete fiber optic connector.

[0101] The fiber optic connector further comprises a ferrule assembly, a spring seat **300** and a spring **400**. The ferrule assembly is pre-assembled into a receiving chamber **306** of the spring seat **300** in a way that the ferrule assembly is held to be movably engaged with the spring seat, that is, the ferrule assembly may be moved relative to the spring seat **300** and cannot be separated or withdrawn from the spring seat **300**, so as to compress the spring **400** in the receiving chamber **306**.

[0102] In an exemplary embodiment of the present invention, the above method further comprises a step of: pulling the second cable connection assembly **2** through an elongated pipe before the step S**200**.

[0103] In the fiber optic connector and the method of assembling the fiber optic connector according to the above exemplary embodiments of the present invention, the ferrule assembly, the spring seat and the spring may be pre-assembled together to form an integral assembly having a size less than that of the connector housing. Accordingly, all components of the connector except for the connector housing may be smoothly pulled through a long narrow pipe as a whole. Furthermore, after being pulled through the pipe, all components of the connector except for the connector housing may be easily and quickly inserted into the connector housing as a whole at one time, saving the assembly time, avoiding mistake operations, effectively preventing the warp of the spring, protecting the end surface of the ferrule and the fiber from being damaged during the assembling process, increasing the long term reliability of interconnection of the fiber optic connectors.

[0104] It should be appreciated for those skilled in this art that the above embodiments are intended to be illustrated, and not restrictive. For example, many modifications may be made to the above embodiments by those skilled in this art, and various features described in different embodiments may be freely combined with each other without conflicting in configuration or principle.

[0105] Although several exemplary embodiments have been shown and described, it would be appreciated by those skilled in the art that various changes or modifications may be made in these embodiments without departing from the principles and spirit of the disclosure, the scope of which is defined in the claims and their equivalents.

[0106] As used herein, an element recited in the singular and proceeded with the word "a" or "an" should be understood as not excluding plural of said elements or steps, unless such exclusion is explicitly stated. Furthermore, references to "one embodiment" of the present invention are not intended to be interpreted as excluding the existence of additional embodiments that also incorporate the recited features. Moreover, unless explicitly stated to the contrary, embodiments "comprising" or "having" an element or a plurality of elements having a particular property may include additional such elements not having that property.

1. A fiber optic connector extending from a front to a rear and comprising:

a ferrule assembly including a ferrule, a ferrule seat, and a protrusion continuously surrounding an outer circumference of the ferrule seat;

a spring seat defining a chamber and an annular stopping flange extending inwardly towards a longitudinal axis of the fiber optic connector, the spring seat being positioned partially behind the ferrule assembly, a rear end of the ferrule seat being positioned within the chamber; and

a spring positioned within the chamber and between the ferrule assembly and the spring seat,

wherein the protrusion abuts the stopping flange, and

wherein the protrusion is biased towards the stopping flange by the spring.

2. (canceled)

3. The fiber optic connector according to claim **1**, wherein

a front end of the ferrule seat is fixedly connected to the ferrule.

4. The fiber optic connector according to claim **1**,

wherein the ferrule and the ferrule seat are integrally formed into a single piece.

5. The fiber optic connector according to claim **1**,

wherein the stopping flange prevents the ferrule seat from being disengaged from the spring seat.

6. (canceled)

7. The fiber optic connector according to claim **1**,

wherein the spring seat defines an insertion port at a front end of the spring seat, the insertion port being in communication with the chamber, and

wherein the stopping flange, extends inwardly towards the longitudinal axis of the fiber optic connector from an edge of the insertion port.

8. The fiber optic connector according to claim **1**,

wherein the stopping flange comprises an elastic snapper.

9. The fiber optic connector according to claim **1**,

wherein a sidewall of the receiving chamber comprises an opening, and wherein the spring is adapted to be installed into the chamber through the opening of the sidewall.

10-11. (canceled)

12. The fiber optic connector according to claim **7**,

wherein the spring is adapted to be installed into the chamber through the insertion port of the spring seat.

13. The fiber optic connector according to claim **1**, further comprising:

a dust cap fitted on a front end of the ferrule;

a crimp ring configured to crimp a strengthening element of an optical cable on a rear end of the spring seat; and

a stress relief tube sleeved on the crimp ring.

14. (canceled)

15. The fiber optic connector according to claim **13**, wherein the connector comprises:

an outer housing; and

an inner housing positioned in the outer housing.

16. (canceled)

17. The fiber optic connector according to claim **15**,

wherein an inner wall of the inner housing comprises a first positioning key, and

wherein the ferrule seat comprises a positioning slot corresponding to the first positioning key.

18-22. (canceled)

23. The fiber optic connector of claim **1**, wherein the protrusion is integrally formed with the ferrule seat as a single piece.

24. A fiber optic connector extending from a front to a back and comprising:

a ferrule assembly including a ferrule and a ferrule seat;

a spring seat defining a chamber, the spring seat comprising a side wall extending from a front end to a back end of the chamber and surrounding a longitudinal axis of the fiber optic connector, the side wall defining an opening, the spring seat being positioned partially behind the ferrule assembly, a rear end of the ferrule seat being positioned within the chamber; and

a spring positioned within the chamber and between the ferrule assembly and the spring seat,

wherein the opening is in communication with the chamber, and

wherein the spring is adapted to be installed into the chamber through the opening.

25. The fiber optic connector according to claim **24**, further comprising:

a dust cap fitted on a front end of the ferrule;

a crimp ring configured to crimp a strengthening element of an optical cable on a rear end of the spring seat; and

a stress relief tube sleeved on the crimp ring.

26. The fiber optic connector according to claim **25**, wherein the connector comprises an outer housing and an inner housing positioned in the outer housing.

27. The fiber optic connector according to claim **25**,

wherein an inner wall of the inner housing comprises a first positioning key, and

wherein the ferrule seat comprises a positioning slot corresponding to the first positioning key.

28. The fiber optic connector according to claim **24**, wherein a front end of the ferrule seat is fixedly connected to the ferrule.

29. The fiber optic connector according to claim **24**, wherein the ferrule and the ferrule seat are integrally formed into a single piece.

* * * * *