US 20050135753A1

(19) United States

(12) Patent Application Publication

(10) Pub. No.: US 2005/0135753 A1

(43) Pub. Date: Jun. 23, 2005

Eigenmann et al.

(54) FIBRE-OPTIC PLUG-IN CONNECTOR SYSTEM

(76) Inventors: **Daniel Eigenmann**, Herisau (CH); **Zullig Marc-Andrew**, Arbon (CH)

Correspondence Address:
WEBB ZIESENHEIM LOGSDON ORKIN & HANSON, P.C.
700 KOPPERS BUILDING
436 SEVENTH AVENUE
PITTSBURGH, PA 15219 (US)

(21) Appl. No.: **10/507,454**

(22) PCT Filed: **Jan. 13, 2003**

(86) PCT No.: **PCT/CH03/00011**

(30) **Foreign Application Priority Data**

Mar. 14, 2002 (CH) 448/02

Publication Classification

(51) **Int. Cl.**[7] **G02B 6/38**

(52) **U.S. Cl.** **385/59**; 385/71

(57) **ABSTRACT**

The invention relates to a fibre-optic plug-in connector system **(10)** comprising an adapter **(11)**, in addition to individual optical plug-in connectors **(13)**, in which a respective optical fibre terminates in a ferrule **(23)** and which can be respectively inserted into the adapter **(11)** from two opposing sides to produce an optical connection between the ends of two optical fibres. According to the invention, the adapter **(11)** has a plurality of parallel guide sheaths **(45)**, which are located next to one another in an adapter housing **(12)** and into which the optical plug-in connectors **(13)** comprising their ferrules **(23)** can be inserted from both sides. To achieve an extremely simple, space-saving construction for a plug-in connector system of this type, the adapter housing **(12)** is composed of several separate, interconnectable parts **(17, 18)**, between which the guide sheaths **(45)** are held with a degree of play.

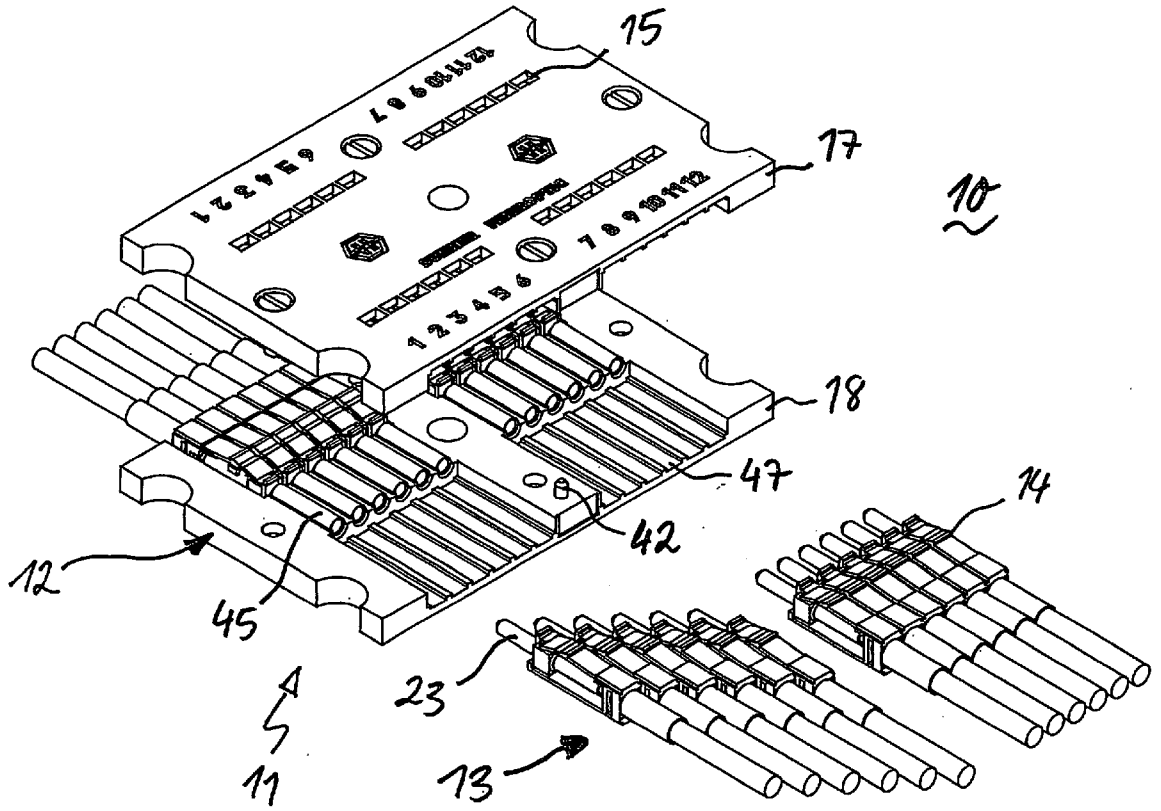

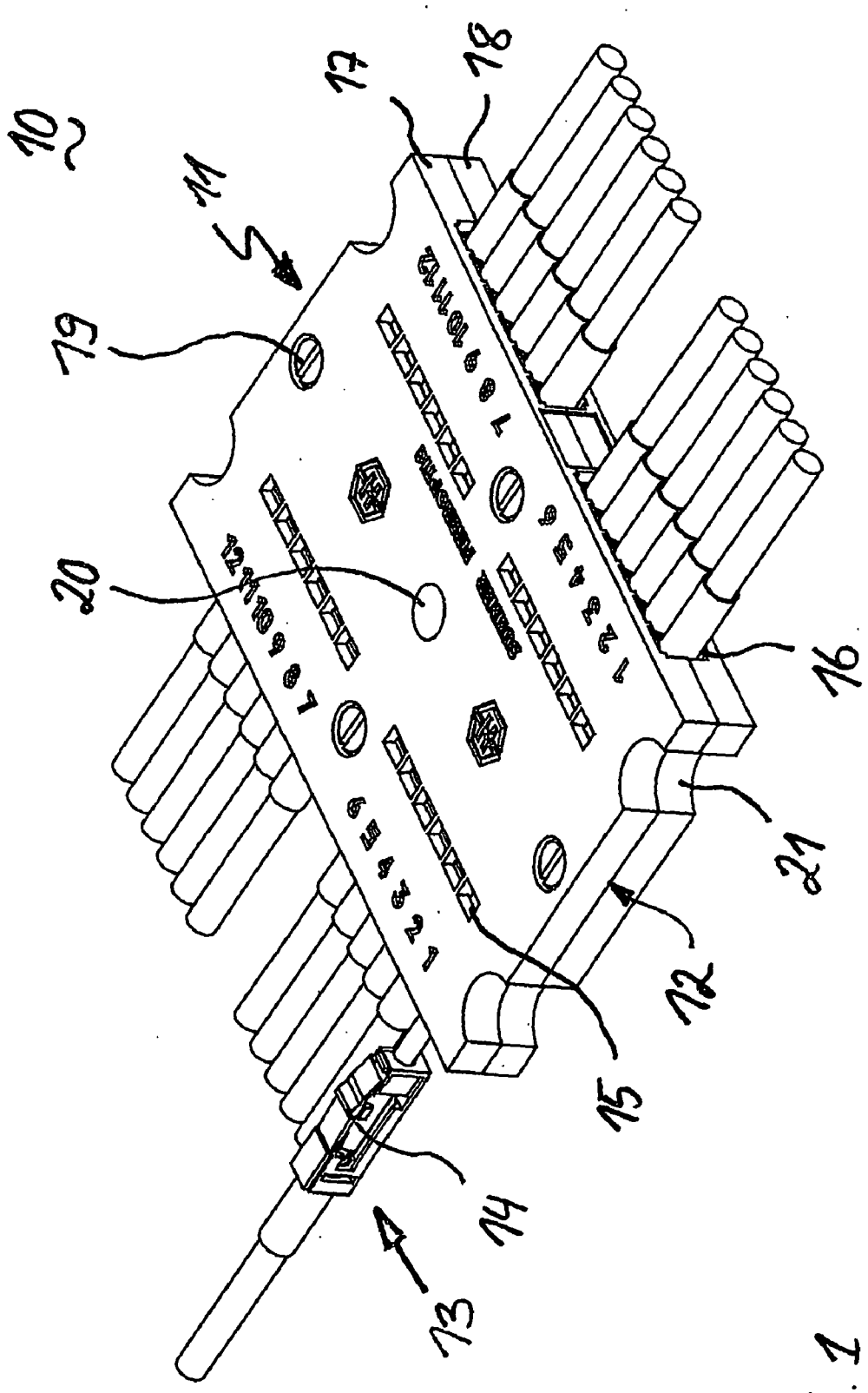

FIG. 1

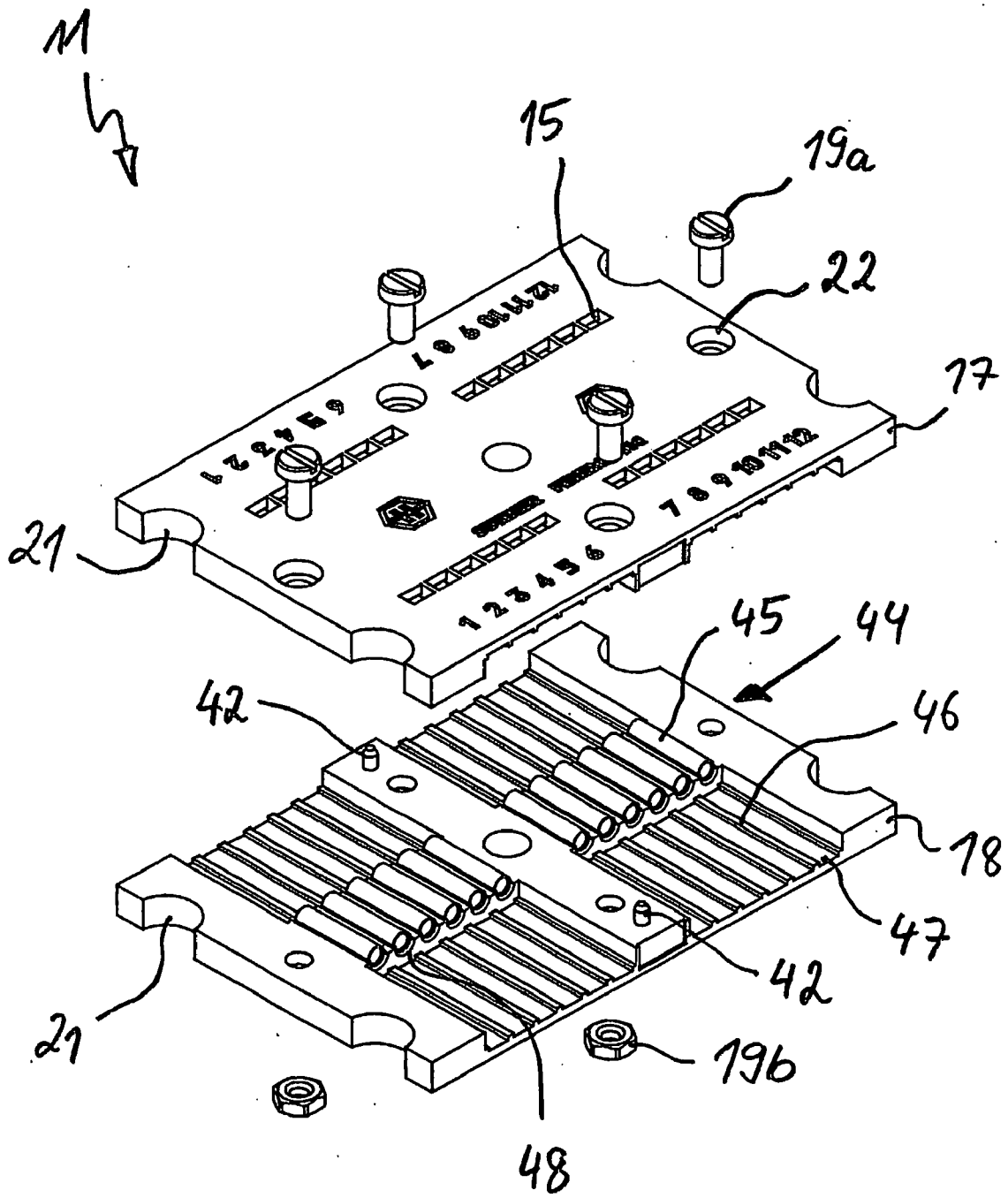

FIG. 2

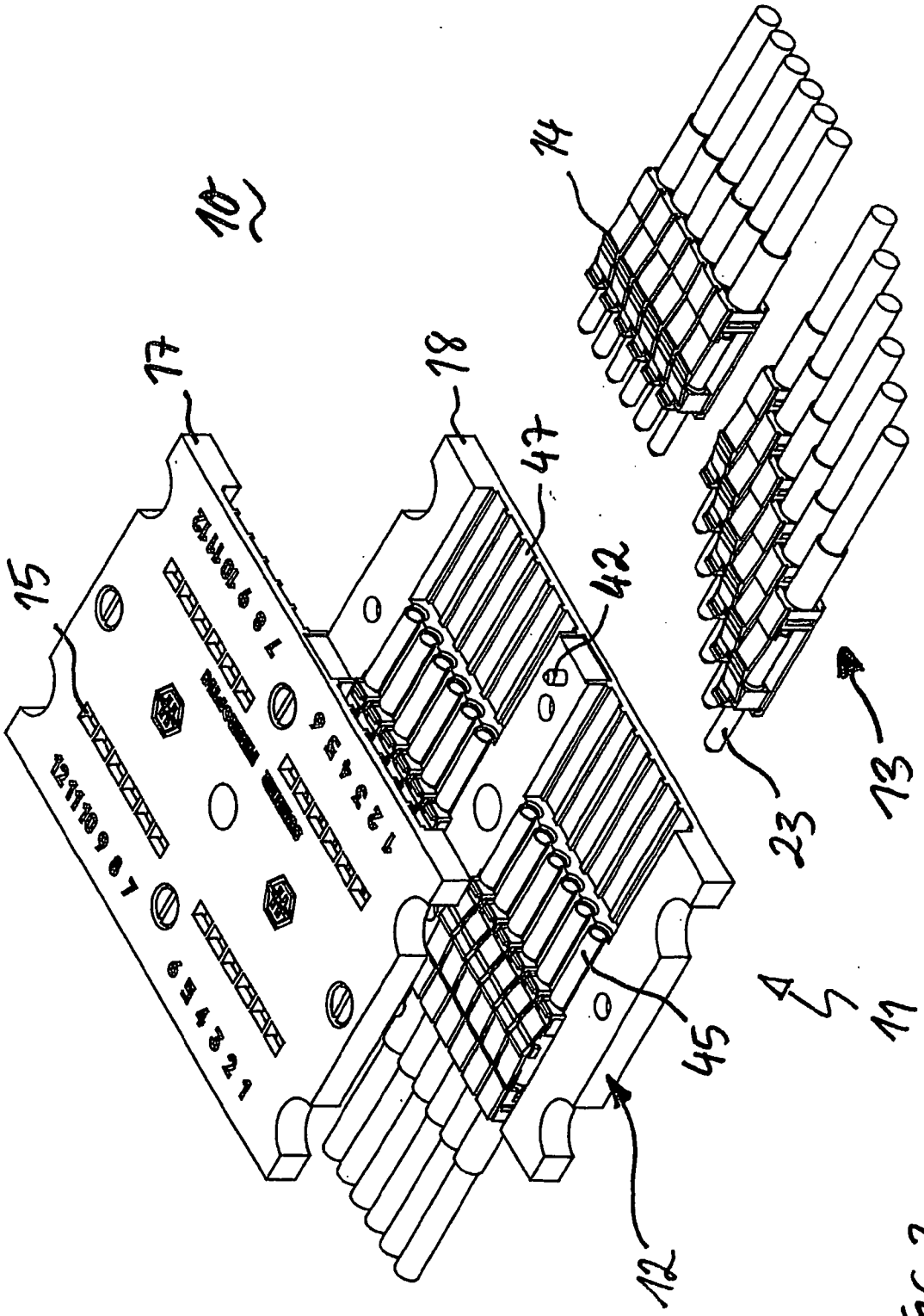

FIG. 3

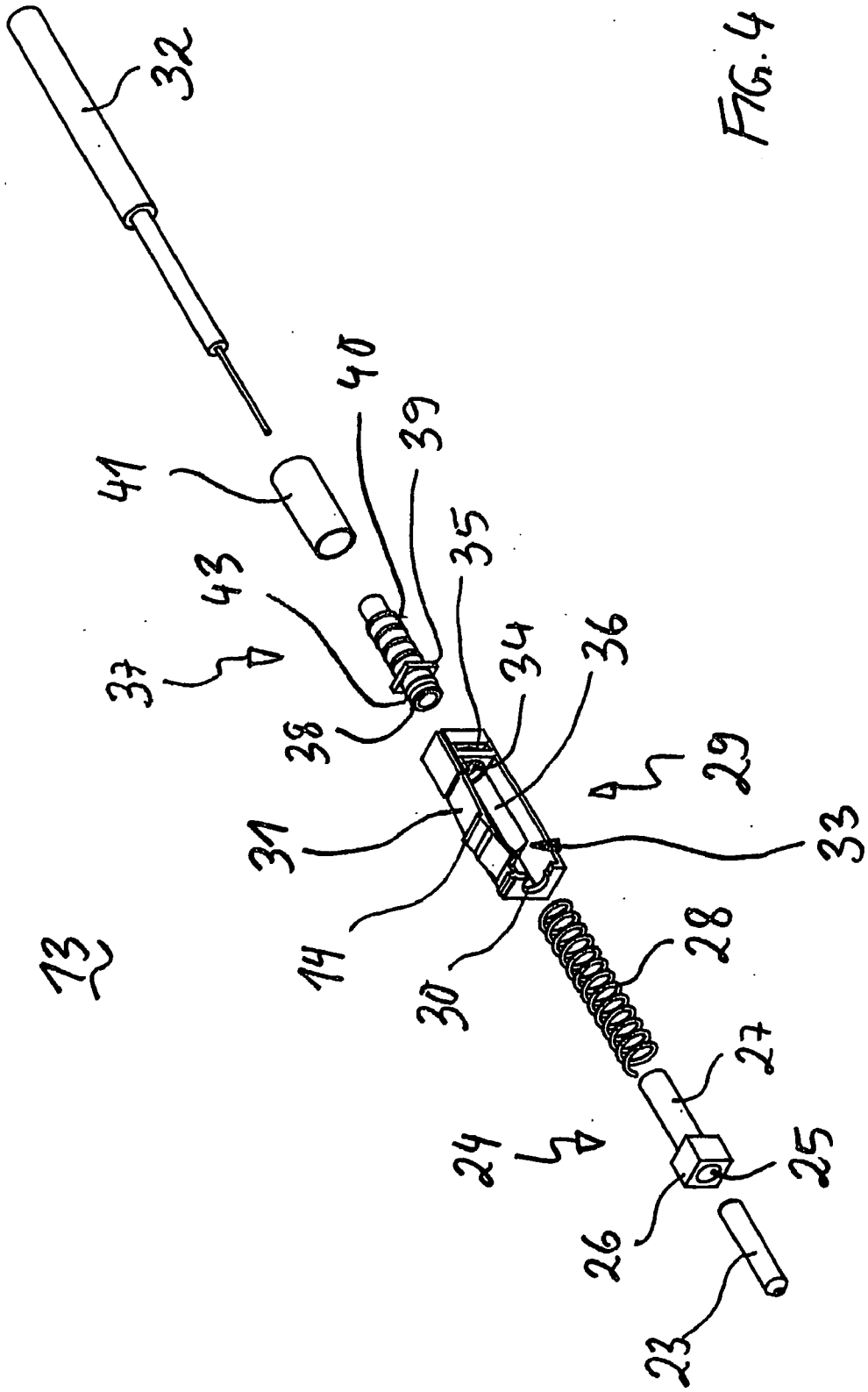

FIG. 4

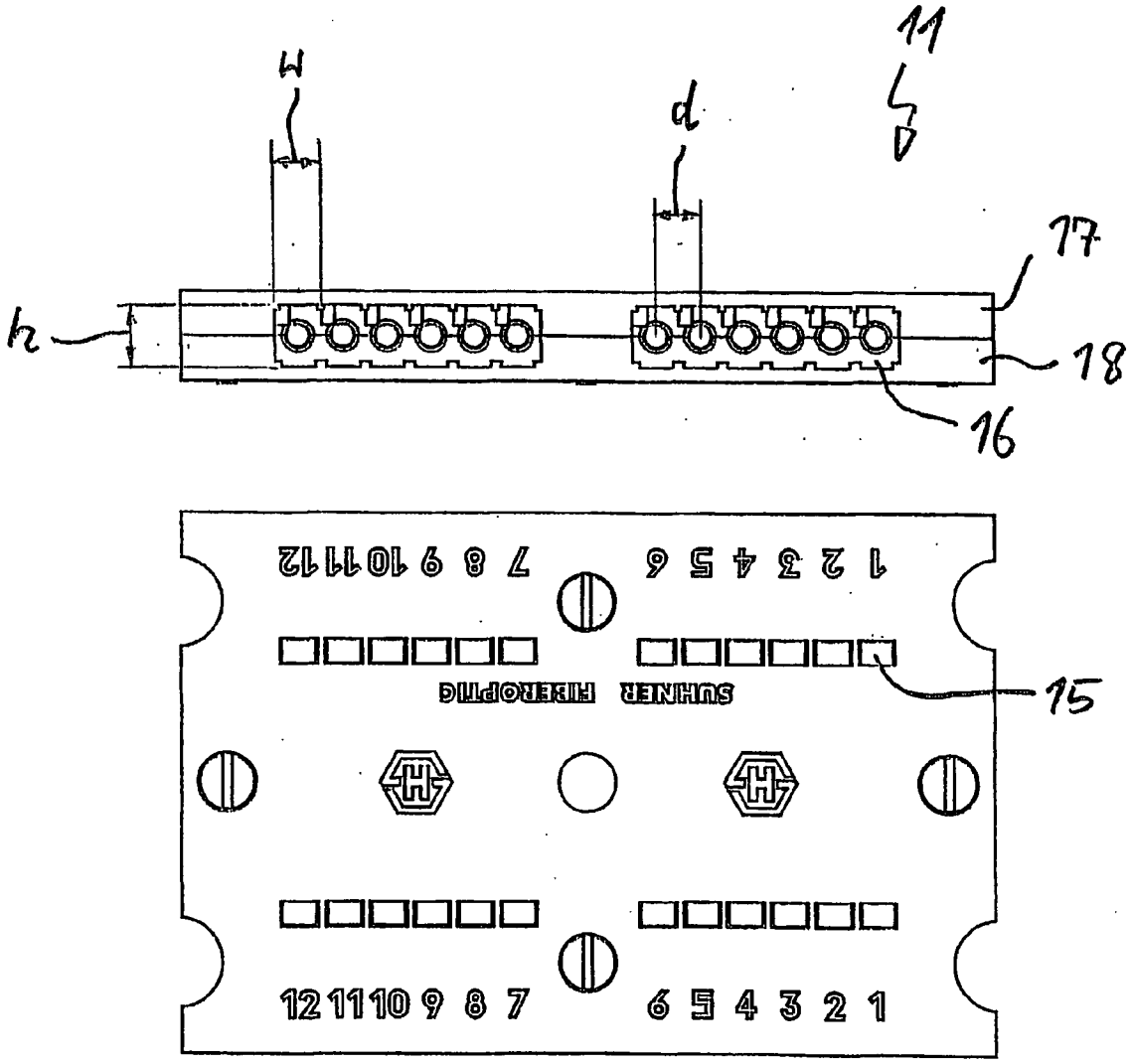
11
w
d
17
h
18
16
15
SUHNER FIBEROPTIC
1 2 3 4 5 6
7 8 9 10 11 12
12 11 10 9 8 7
6 5 4 3 2 1

FIG. 5

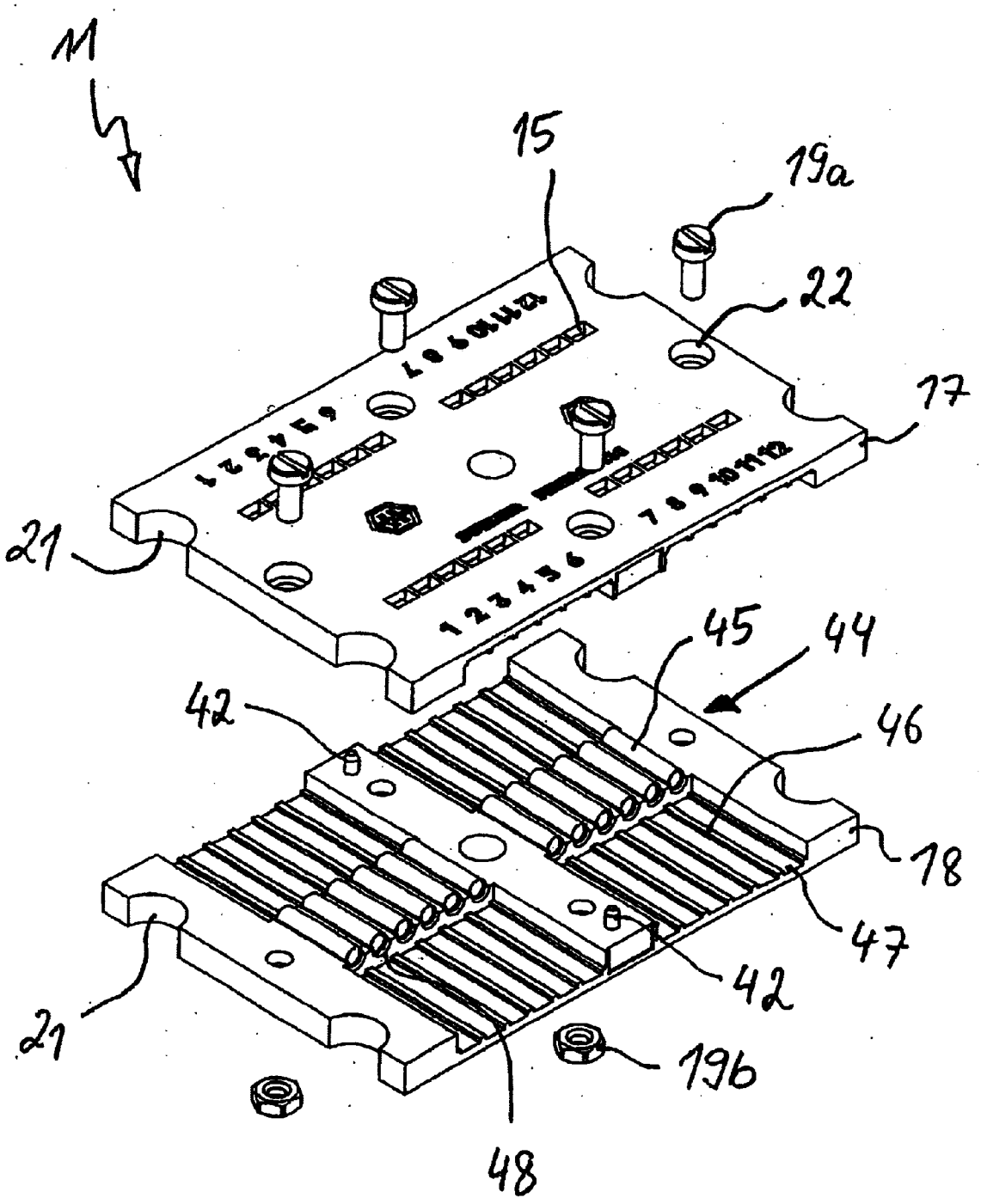

FIG. 2

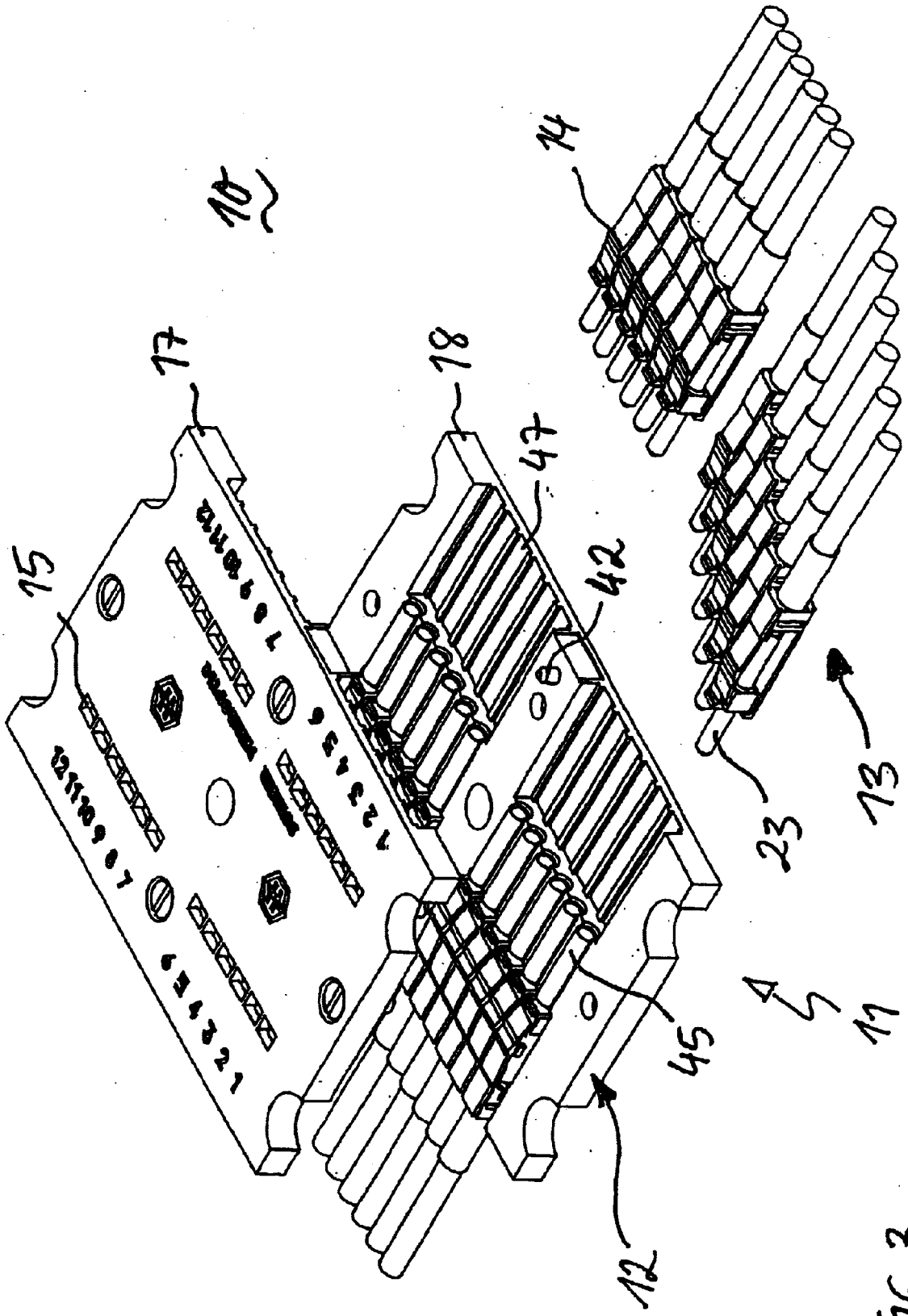

FIG. 3

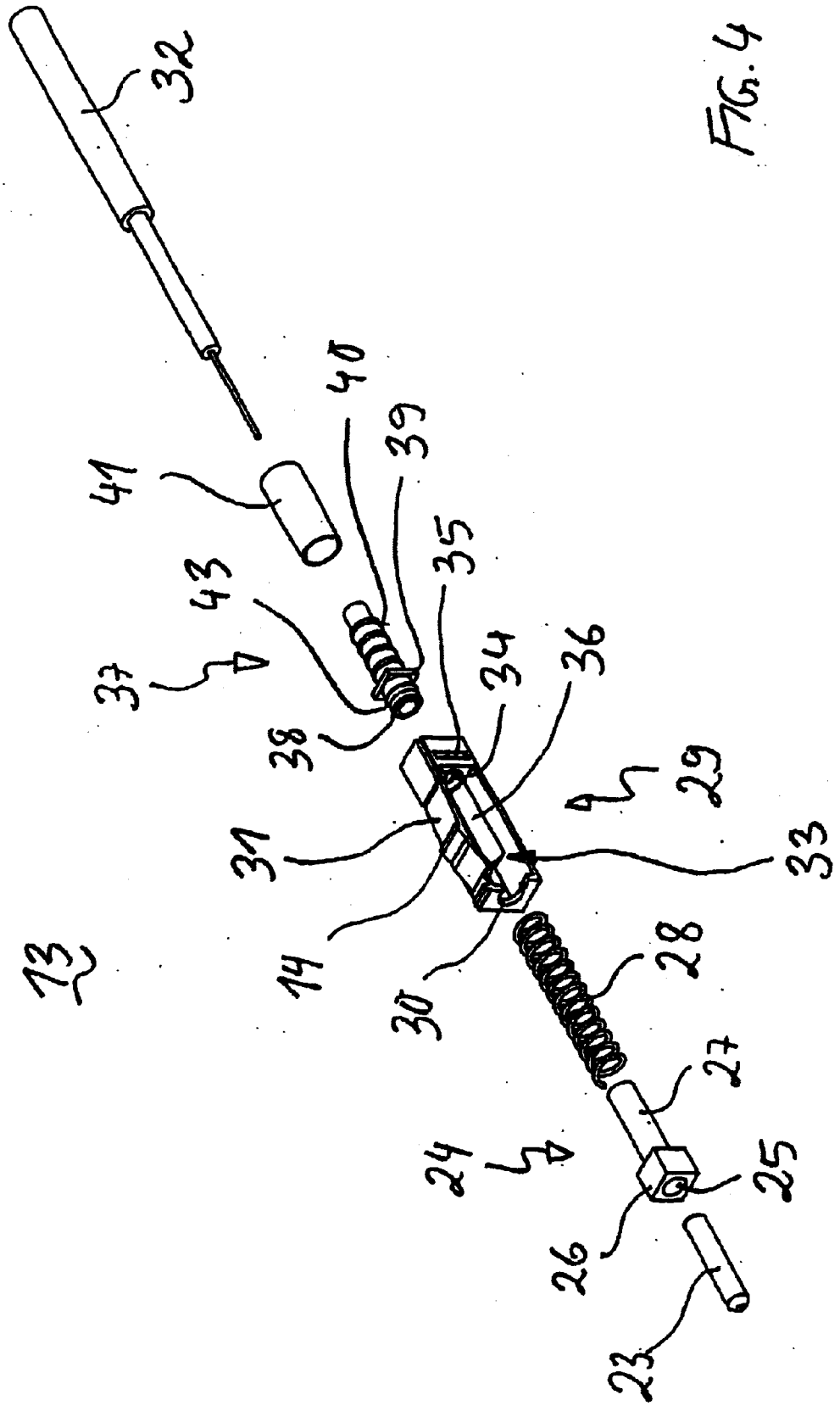

FIG. 4

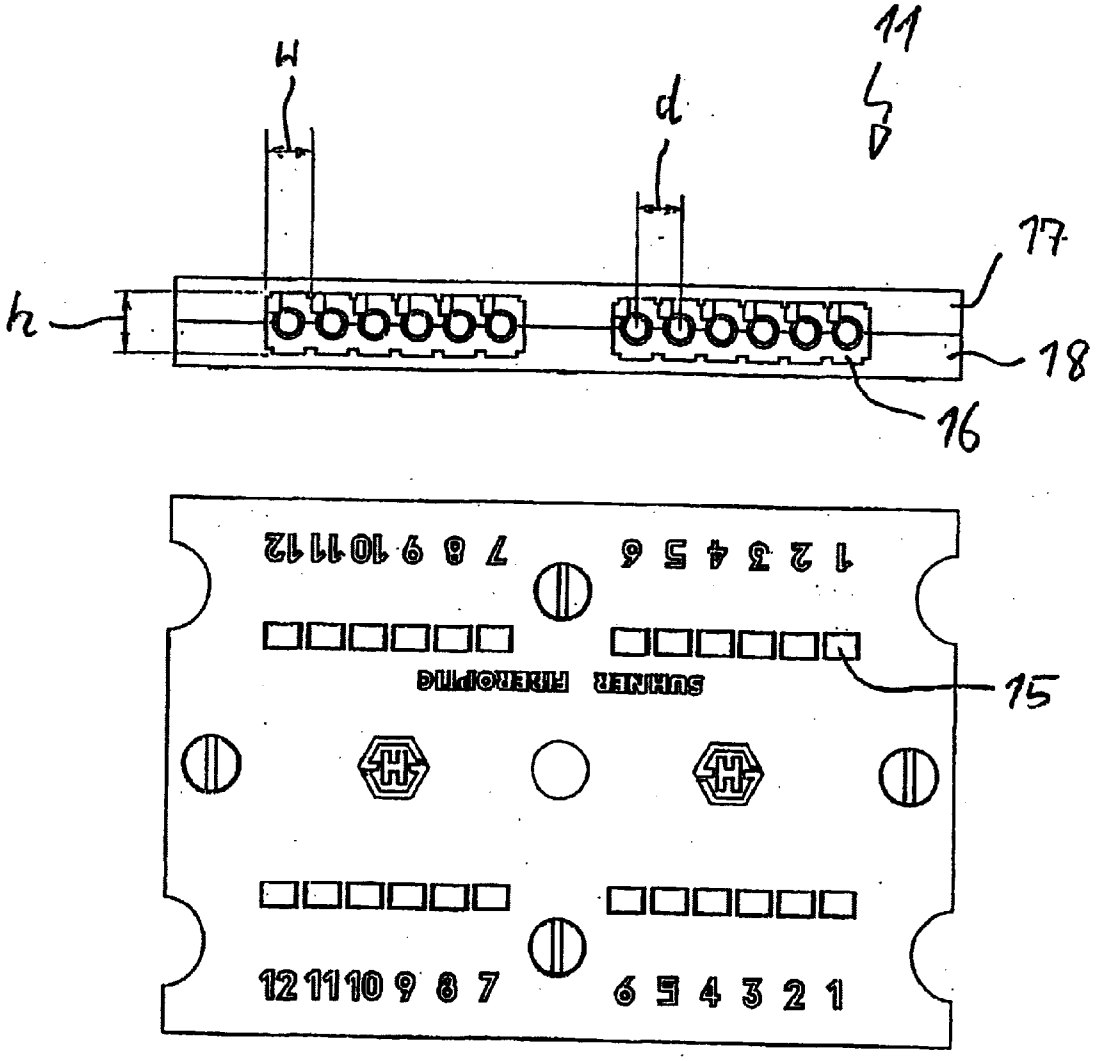
11
w
d
17
h
18
16
15
SUHNER FIBEROPTIC
1 2 3 4 5 6
7 8 9 10 11 12
12 11 10 9 8 7
6 5 4 3 2 1

FIG. 5

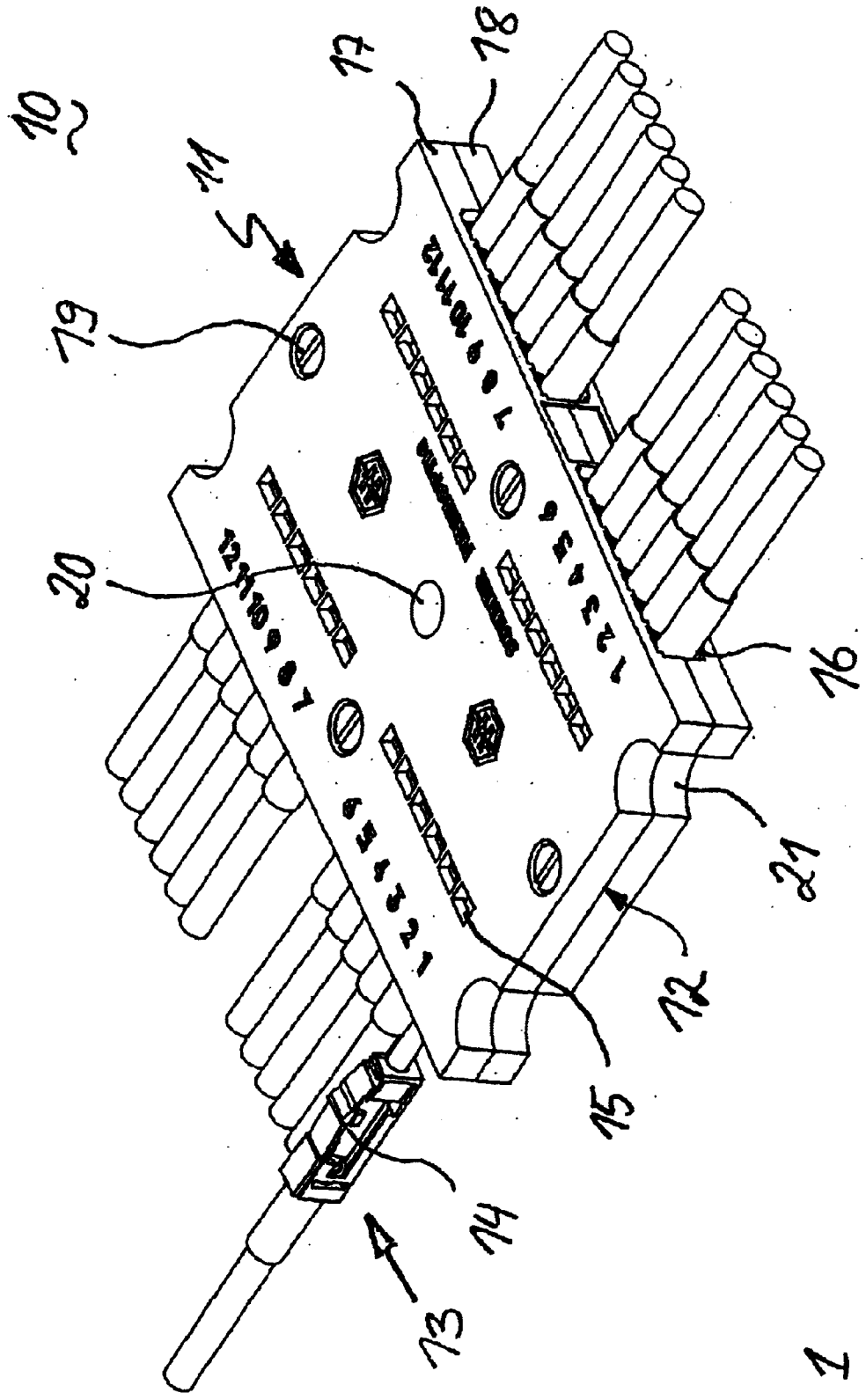

FIG. 1

FIBRE-OPTIC PLUG-IN CONNECTOR SYSTEM

TECHNICAL FIELD

[0001] The present invention relates to the field of fiber-optic connection technology. It concerns a fiber-optic plug-in connector system according to the the preamble of claim **1**.

[0002] Such a system is known for example from the printed document EP-A2-0 430 107 (FIG. 27 and associated text) or EP-A2-1 168 020.

PRIOR ART

[0003] In the technology of fiber-optic signal transmission, cables in which a plurality of, for example, 12 individual parallel fibers are combined in a cable (known as a ribbon cable) have long been in use. For cables of this type there are special plug-in connector systems, in which all the fibers of the cable are simultaneously connected to one another by a plug-in connector in a predetermined, invariable arrangement. Examples of plug-in connector systems of this type are disclosed in U.S Pat. No. 5,214,730 or in U.S. Pat. No. 6,352,372. The last-mentioned document in particular makes it clear that large-scale integration plug-in connector systems with an extremely high connecting density can be realized in this way.

[0004] However, on the other hand there is the desire to connect the individual fibers of such multi-fiber cables to one another or to other fiber-optic single-fiber or multi-fiber cables according to requirements and in a largely freely determinable arrangement. In principle, this is possible using standardized plug-in connector systems with individual plug-in connectors if the fibers of the multi-fiber cable are correspondingly separated at the end of the cable and each individual one is provided with a separate plug-in connector. In the case of a ribbon cable with 12 individual fibers, at the end of the cable there are then for example 12 individual plug-in connectors, which have to be further connected in a plug-in connector system.

[0005] In the document cited at the beginning, EP-A2-1 168 020, there is already a description of a plug-in connector system in which a number of individual plug-in connections can be produced independently of one another for multi-fiber cables within a common adapter. The adapter comprises a frame into which a plurality of individual adapter housings of a multi-fiber connector system can be snap-fitted next to one another. However, the combination of a number of individual standardized plug-in connector systems to form an overall system results in an overall system with considerable dimensions, which runs counter to the efforts constantly being made to reduce the size of communication systems.

[0006] This also applies to the plug-in connector system shown in FIG. 27 of EP-A2-0 430 107, in which a plurality of slots are arranged next to one another in a one-part adapter housing for the separate connection to standardized plug-in connectors which are provided with a relatively large housing. With a plug-in connector system for separately connecting the fibers of a multi-fiber cable comprising 12 fibers, this produces an arrangement which takes up considerable space and therefore cannot be used in practice for this purpose. Disadvantages are also brought about by the locking system accommodated in the adapter housing, which leads to a significant increase in the overall height.

[0007] In an earlier patent application of the applicant (WO-A1-01/59499), multiple plug-in connector systems in which very narrow individual plug-in connector inserts are combined in a common housing to form a multiple plug-in connector have already been proposed for use in backplane connections. That application does not envisage freely determinable plug-in connection between individual plug-in connector inserts.

SUMMARY OF THE INVENTION

[0008] It is therefore the object of the invention to provide a fiber-optic plug-in connector system which is distinguished by an extremely compact arrangement and in particular a low overall height, and which makes it possible for a multiplicity of individual fibers to be connected according to choice in an extremely small space while at the same time being easy to handle.

[0009] The object is achieved by the features of claim **1** in their entirety. The essence of the invention is to achieve a low overall height and at the same time a high connector density by a multi-part adapter housing in which the guiding sleeves necessary for the plug-in connection are held directly between the housing parts.

[0010] The plug-in connector system is particularly simple and space-saving if, according to a preferred refinement of the invention, the adapter housing is made up of a flat, plate-shaped upper part and a flat, plate-shaped lower part.

[0011] The correct assembly of the multipart adapter housing is facilitated by guiding means being provided on the upper part and/or the lower part for aligning the two parts with each other, the guiding means preferably comprising a number of guiding pins which are arranged in a distributed manner, are attached in one of the parts and enter into a corresponding bore in the other part.

[0012] Assembly is further simplified and improved by connecting means which comprise screw couplings in particular being provided for releasably connecting the upper part and the lower part. This allows the system to be easily dismantled again if need be for maintenance or repair purposes.

[0013] According to another preferred refinement of the invention, respectively provided in the upper part and the lower part is a central web, which runs transversely in relation to the plugging direction and has a plurality of half-cylindrical depressions for receiving the guiding sleeves, arranged one behind the other in the longitudinal direction of the central web. Also respectively provided in the upper part and the lower part, in front of and behind the central web in the plugging direction, are guiding rails, which run between the guiding sleeves in the plugging direction and define for each of the guiding sleeves an associated insertion channel for a plug-in connector.

[0014] Possibilities for flexible use of the plug-in connector system are achieved by means for fastening and/or aligning the adapter housing being provided on the adapter housing.

[0015] An optimal combination of good operating suitability and a high connection density is obtained in particu-

lar if the spacing of the guiding sleeves arranged directly next to one another, measured from sleeve axis to sleeve axis, is approximately twice the inside diameter of the guiding sleeves. It is also of advantage in this connection if the ferrules used in the plug-in connectors have an outside diameter of 1.25 mm.

[**0016**] Also essential for the compact construction of the plug-in connector system is the configuration of the individual plug-in connectors. A preferred refinement of the invention is characterized in that the plug-in connectors respectively have a holder, preferably consisting of a plastic, in the form of a rectangular frame, which is elongate in the plugging direction, encloses an interior space and in the front side of which an opening for the ferrule and in the rear side of which a through-bore for leading through a fiber-optic cable are provided, in that a spring element, in particular in the form of a spiral spring, is mounted in the interior space of the holder for the sprung-mounting of the ferrule, and in that the opening for the ferrule is formed such that it is open toward the side to facilitate assembly.

[**0017**] To provide the possibility of adjustment of the optical fiber in the plug-in connector, the ferrule is preferably inserted in an inner part, preferably consisting of metal, arranged in the interior space of the holder, the inner part has a guiding sleeve for guiding the spring element, and means which permit an adjustment of the inner part into different angular positions by rotation about its longitudinal axis are provided on the inner part, the adjusting means comprising in particular an adjusting portion with a square cross section, which adjoins the guiding sleeve in the front region of the inner part and has a receiving bore for receiving the ferrule, and on which the spring element is supported by its front end.

[**0018**] The securing of the plug-in connections is preferably made possible by a side wall on the holders respectively having a resilient portion with a latching element arranged on it, and by latching openings into which the plug-in connectors engage with their latching elements on insertion in the adapter housing being provided in the adapter housing.

[**0019**] To facilitate use of the plug-in connector system, it may be of advantage if the guiding sleeves in the adapter are combined into a number of groups, respectively comprising a number of guiding sleeves. With a total of 12 individual plug-in connections, it is of advantage if two groups of six guiding sleeves each are provided in the adapter.

[**0020**] Further embodiments emerge from the dependent claims.

BRIEF EXPLANATION OF THE FIGURES

[**0021**] The invention is to be explained in more detail below on the basis of exemplary embodiments in conjunction with the drawing, in which

[**0022**] **FIG. 1** shows in a perspective side view a fiber-optic plug-in connector system according to a preferred exemplary embodiment of the invention for the individual connection of a total of 12 fibers in two groups of 6 fibers each;

[**0023**] **FIG. 2** shows the adapter of the plug-in connector system from **FIG. 1** in an exploded representation;

[**0024**] **FIG. 3** shows the adapter in the representation according to **FIG. 2** with the associated plug-in connectors in the partially inserted state;

[**0025**] **FIG. 4** shows an individual plug-in connector from **FIG. 3** in an exploded representation; and

[**0026**] **FIG. 5** shows the adapter from **FIG. 1** in the view from the front and in the plan view from above.

WAYS OF IMPLEMENTING THE INVENTION

[**0027**] In **FIG. 1**, a fiber-optic plug-in connector system according to a preferred exemplary embodiment of the invention is represented in a perspective side view. The fiber-optic plug-in connector system **10** comprises an adapter **11**, which has a rectangular, flat adapter housing **12** comprising an upper part **17** and a lower part **18**. Respectively arranged on the opposite longitudinal sides of the adapter **11** are two rows of insertion openings **16** lying directly next to one another (see also **FIG. 5**, upper part-figure). In the example represented, there are in each case 6 insertion openings 16 per row, that is a total of 12 insertion openings **16**. For better identification and differentiation of the individual insertion openings **16**, associated numbers 1 . . . 12 have been applied to the upper side of the adapter housing **12**. Each of the insertion openings **16** is assigned an insertion channel (**47** in **FIG. 2**), running inside the adapter housing **12**. Every two insertion openings **16** and insertion channels **47** lying directly opposite one another respectively form a pair, which can be used for connecting two optical fibers. For this purpose, the optical fibers are respectively provided at their ends. with a plug-in connector **13** made to match the adapter **11**. With the adapter represented in **FIG. 1**, a maximum of 12 pairs of optical fibers can be connected to one another according to choice, for which purpose a total of at most 24 plug-in connectors **13** shown in **FIG. 1** are required (23 plug-in connectors are shown in the inserted state in **FIG. 1**, 1 plug-in connector at position **1** is shown pulled out).

[**0028**] The two parts **17** and **18** of the adapter housing are releasably connected to each other by a number of screw couplings **19**. The screw couplings **19** preferably each comprise a screw (**19***a* in **FIG. 2**) and a nut (**19***b* in **FIG. 2**). Screw heads and nuts are countersunk on the adapter housing **12** in corresponding screw holes (**22** in **FIG. 2**). In order that the adapter **11** can be fastened on an underlying surface (rear wall, printed circuit board or the like), a fastening hole **20** passing through the adapter housing **12** is provided in the middle. At the same time, the adapter housing **12** has on its transverse sides semicircular recesses, which can be used for positioning and/or fastening.

[**0029**] The internal construction of the adapter **11** is reproduced in the exploded representation of **FIG. 2**. Central elements of the adapter **11** are a plurality of cylindrical guiding sleeves **45**, of which there is one per plug-in connection, that is a total of 12. The guiding sleeves **45** receive the ferrules (**23** in **FIGS. 3, 4**) of the plug-in connectors **13** in a way known per se and guide them in such a way that the ferrules of the two plug-in connectors involved in the plug-in connection and the ends of the fibers that are located in the central bores of the ferrules butt against one another with the end faces.

[**0030**] The mounting of the guiding sleeves **45** takes place directly in the parts **17** and **18** of the adapter housing **12**. For

this purpose, in the upper part **17** and the lower part **18** there is respectively formed a central web **44**, which runs in the longitudinal direction and in which there are formed two rows of parallel, half-cylindrical depressions **48**, arranged one behind the other in the longitudinal direction and running in the plugging direction. In the trough-like depressions **48**, which complement one another to form a cylindrical bore when the upper part **17** and the lower part **18** are screwed together, the guiding sleeves **45** are mounted and held with a degree of play. In order that the two parts **17**, **18** of the adapter housing **12** can be placed one on top of the other with the precision necessary for the mounting of the guiding sleeves **45**, arranged on the upper side of the lower part **18** are two widely spaced-apart guiding pins **42**, which enter into corresponding bores on the underside of the upper part **17** and in this way align the two parts **17**, **18** with each other.

[**0031**] The upper part **17** and the lower part **18** are two flat plates of the same height, which are formed substantially mirror-symmetrically in relation to a central plane. The overall height of the adapter housing **12** is in this case no more than approximately 5 mm. Respectively provided in the upper part **17** and in the lower part **18**, in front of and behind the central web **44** in the plugging direction, in a lower-lying plane, are guiding rails **46**, which run between the guiding sleeves **45** in the plugging direction. Every two guiding rails **46** neighboring a guiding sleeve **45** define an insertion channel **47** for a plug-in connector **13**, associated with the guiding sleeve.

[**0032**] The plug-in connectors can be inserted into the insertion channels **47** formed in this way—as represented in **FIG. 3**, their ferrules **23** being received by the associated guiding sleeves **45**. Since each individual one of the 12 plug-in connections on each side of the guiding sleeve **45** has an insertion channel of its own, the 12 plug-in connections can be made completely independently of one another, as indicated by the plug-in connectors **13** depicted in offset arrangement in **FIG. 3**. In order that the plug-in connectors **13** are securely held in the adapter **11** in the inserted state, a latching device is provided for each plug-in connector, comprising according to **FIG. 1 a** resilient latching element **14** in the form of a latching stage on the plug-in connector **13**, with which the plug-in connector **13** engages in a latching opening **15** in the upper part **17** of the adapter housing **12** in the inserted state. For releasing the latching engagement, the latching element **14** can be pressed with a suitable object or implement downward from above through the latching openings **15**, and the plug-in connector **13** at the same time lifted out of the insertion channel **47**.

[**0033**] The particularly compact and space-saving construction of the plug-in connector system **10**, and in particular of the adapter **11**, is only possible if the plug-in connectors **13** themselves are restricted to a minimum in their outer dimensions. Used with preference as plug-in connector **13** in the present case is a configuration which has already been used by the applicant in an earlier application (WO-A1-01/59499) in a different context, that is as an insert in a backplane connector. The construction of the plug-in connector **13** is reproduced in an exploded representation in **FIG. 4**.

[**0034**] According to **FIG. 3**, an individual plug-in connector **13** comprises the ferrule **23** (material: for example zirconia; diameter: preferably 1.25 mm), an inner part **24** (made of metal), a spring element **28** in the form of a spiral spring, a frame-shaped holder **29** (injection molding made of plastic), a crimping neck **37** (made of metal) and a crimping sleeve **41** (likewise made of metal). It goes without saying that, instead of the spiral spring, some other spring element, for example a rubber tube, may also be used. The holder **29** forms the basic component of the plug-in connector **13** and gives the plug-in connector **13** the necessary mechanical stability. The other components **23**, **24**, **28**, **37** and **41** are accommodated in the holder **29** or attached to the holder **29**. The holder **29** has the form of a rectangular frame which is elongate in the plugging direction and encloses an interior space **33**. In the front wall (front side) of the frame, an opening **30** is provided for the ferrule **23**. In the rear wall (rear side), a through-bore **34** is provided for leading through the fiber-optic cable **32**, and a rectangular receiving space **35** is provided. Arranged on the outer side of the rear wall is a square recess (not visible in **FIG. 3**).

[**0035**] The crimping neck **37** comprises a square holding plate **39**, which is respectively adjoined at the front and rear in the axial direction by a tube stub **38** and **40**. The front tube stub **38** additionally bears a concentric annular bead **43**. When the crimping neck **37** is pressed into the through-bore **34** of the holder **29**, the tube piece **38** engages with its annular bead **43** in the receiving space **35**. At the same time, the holding plate **39** comes to lie in the aforementioned recess in the rear wall and in this way secures the crimping neck **37**, pressed into the holder **29**, against being twisted by a torsional force acting. on the cable **32**. The front tube stub **38**, protruding into the interior space **33** when the crimping neck **37** is pressed in, serves for supporting the spiral spring **28** inserted into the interior space **33**. The rear tube stub **40**, protruding out of the holder **29** to the rear, serves for securing the strain relief of the fiber-optic cable **32** by means of the crimping sleeve **41** pushed over it and subsequently pressed.

[**0036**] The ferrule **23**, the inner part **24** and the spiral spring **28** are mounted in the interior space **33** of the holder **29**. The inner part **24** comprises a guiding sleeve **27** for guiding the spiral spring **28** and an adjusting portion **26** with a square cross section. The adjusting portion **26** adjoins the guiding sleeve **27** in the front region of the inner part **24** and has a receiving bore **25** for receiving the ferrule **23**. The spiral spring **28**, pulled over the guiding sleeve **27**, is supported by its front end against the rear side of the adjusting portion **26**. The ferrule **23** is pressed into the receiving bore **25** on the inner part **24** and inserted together with the inner part **24** and the pushed-on spiral spring **28** into the interior space **33** from the open side of the holder. In order that the ferrule **23** can assume its place in the front opening **30** unhindered, this opening **30** is formed such that it is open to the side. The interaction-between the square adjusting portion **26** and the rectangular interior space **33** permits an adjustment of the inner part **24** (or the fiber) into different angular positions by rotation about its longitudinal axis (in 4 steps of 90° each). The spiral spring **28** thereby presses the inner part against the front part of the holder **29**, so that the adjusted position can be held. In order to give the spiral spring **28** an additional lateral hold in the interior space **33**, elongate bounding elements **36** may be formed on the inner side of the longitudinal walls of the holder.

[0037] However, instead of the rectangular or square configuration with its adjustability in steps of 90°, it is also conceivable for example to provide a hexagonal configuration with an adjustability in steps of 60°. In order that the plug-in connectors **13** can be inserted into the adapter **11** with latching engagement, on each holder **29** the upper-lying side wall respectively has a resilient portion **31**, protruding outward in a slightly V-shaped manner, arranged on which is a latching stage (latching element **14**), which as already described further above—releasably engages in the associated latching opening **15** on the adapter housing **12** when the plug-in connector **13** is pushed in.

[0038] The high plug-in connector density that is possible with the solution according to the invention can be seen from the front view in the upper part of **FIG. 5**, showing the height h and the width w of an an individual insertion opening **16** and the spacing d between two neighboring guiding sleeves or insertion openings **16**, measured from sleeve axis to sleeve axis. If ferrules **23** with a diameter of 1.25 mm are used, each plug-in connector **13** or each insertion opening **16** has dimensions (width×height) with a width w of approximately 2.4 mm and a height h of approximately 3.4 mm. The spacing d is then approximately the same size as the width w.

[0039] For comparison, the corresponding dimensions of known plug-in connectors are given below:

Plug-in connector type	Width × height (mm × mm)
Pres. appl. (1.25 mm ferrule)	2.4 × 3.4
LC connector (1.25 mm ferrule)	4.5 × 9.1
sc connector (2.5 mm ferrule)	7.4 × 9.0
LSH connector (2.5 mm ferrule)	6.7 × 12

[0040] It is immediately evident from the comparison that, with the plug-in connector system according to the application, a considerably more compact solution is available for complex and flexible connections of optical fibers.

LIST OF DESIGNATIONS

[0041] **10** fiber-optic plug-in connector system

[0042] **11** adapter

[0043] **12** adapter housing

[0044] **13** optical plug-in connector

[0045] **14** latching element (latching stage)

[0046] **15** latching opening

[0047] **16** insertion opening

[0048] **17** upper part

[0049] **18** lower part

[0050] **19** screw coupling

[0051] **19***a* screw

[0052] **19***b* nut

[0053] **20** fastening hole

[0054] **21** recess

[0055] **22** screw hole

[0056] **23** ferrule

[0057] **24** inner part

[0058] **25** receiving bore

[0059] **26** adjusting portion

[0060] **27** guiding sleeve

[0061] **28** spring element or spiral spring

[0062] **29** holder (frame-shaped)

[0063] **30** opening

[0064] **31** resilient portion

[0065] **32** fiber-optic cable

[0066] **33** interior space

[0067] **34** through-bore

[0068] **35** receiving space (rectangular)

[0069] **36** bounding element

[0070] **37** crimping neck

[0071] **38,40** tube stub

[0072] **39** holding plate

[0073] **41** crimping sleeve

[0074] **42** guiding pin

[0075] **43** annular bead

[0076] **44** central web

[0077] **45** guiding sleeve

[0078] **46** guiding rail

[0079] **47** insertion channel

[0080] **48** depression (half-cylindrical)

[0081] d spacing

[0082] h height

[0083] w width

1. A fiber-optic plug-in connector system **(10)**, comprising an adapter **(31)** and individual optical plug-in connectors **(13)**, in which an optical fiber respectively ends in a ferrule **(23)**, and which can be respectively inserted into the adapter **(11)** from two opposing sides to produce an optical connection between the ends of two optical fibers, the adapter **(11)** having in an adapter housing **(12)** a plurality of guiding sleeves **(45)**, which are arranged parallel next to. one another and into which the optical plug-in connectors **(13)** can be inserted with their ferrules **(23)** from both sides, characterized in that the adapter housing **(12)** is made up of a number of separate parts **(17, 18)** which can be connected to one another and between which the guiding sleeves **(45)** are held with a degree of play.

2. The plug-in connector system as claimed in claim 1, characterized in that the adapter housing **(12)** is made up of a flat, plate-shaped upper part **(17)** and a flat, plate-shaped lower part **(18)**.

3. The plug-in connector system as claimed in claim 2, characterized in that guiding means **(42)** are provided on the

upper part (**17**) and/or the lower part (**18**) for aligning the two parts (**17**, **18**) with each other.

4. The plug-in connector system as claimed in claim 3, characterized in that the guiding means comprise a number of guiding pins (**42**) which are arranged in a distributed manner, are attached in one of the parts (**17**, **18**) and enter into a corresponding bore in the other part.

5. The plug-in connector system as claimed in one of claims 2 to 4, characterized in that connecting means (**19**; **19***a,b;* **22**) are provided for releasably connecting the upper part (**17**) and the lower part (**18**).

6. The plug-in connector system as claimed in claim 5, characterized in that the connecting means comprise screw couplings (**19**).

7. The plug-in connector system as claimed in one of claims 2 to 6, characterized in that respectively provided in the upper part (**17**) and the lower part (**18**) is a central web (**44**), which runs transversely in relation to the plugging direction and has a plurality of half-cylindrical depressions (**48**) for receiving the guiding sleeves (**45**), arranged one behind the other in the longitudinal direction of the central web (**44**).

8. The plug-in connector system as claimed in claim 7, characterized in that respectively provided in the upper part (**17**) and the lower part (**18**), in front of and behind the central web (**44**) in the plugging direction, are guiding rails (**46**), which run between the guiding sleeves (**45**) in the plugging direction and define for each of the guiding sleeves (**45**) an associated insertion channel (**47**) for a plug-in connector (**13**).

9. The plug-in connector system as claimed in one of claims 1 to 8, characterized in that means (**20**, **21**) for fastening and/or aligning the adapter housing (**11**) are provided on the adapter housing (**11**).

10. The plug-in connector system as claimed in one of claims 1 to 9, characterized in that the spacing (d) of the guiding sleeves (**45**) arranged directly next to one another, measured from sleeve axis to sleeve axis, is approximately twice the inside diameter of the guiding sleeves (**45**).

11. The plug-in connector system as claimed in one of claims 1 to 10, characterized in that the ferrules (**23**) have an outside diameter of 1.25 mm.

12. The plug-in connector system as claimed in one of claims 1 to 11, characterized in that the plug-in connectors (**13**) respectively have a holder (**29**), preferably consisting of a plastic, in the form of a rectangular frame, which is elongate in the plugging direction, encloses an interior space (**33**) and in the front side of which an opening (**30**) for the ferrule (**23**) and in the rear side of which a through-bore (**34**) for leading through a fiber-optic cable (**32**) are provided, and in that a spring element (**28**), in particular in the form of a spiral spring, is mounted in the interior space (**33**) of the holder for the sprung-mounting of the ferrule (**23**).

13. The plug-in connector system as claimed in claim 12, characterized in that the opening (**30**) for the ferrule (**23**) is formed such that it is open toward the side to facilitate assembly.

14. The plug-in connector system as claimed in claim 12, characterized in that the ferrule (**23**) is inserted in an inner part (**24**) preferably consisting of metal, arranged in the interior space (**33**) of the holder (**29**), in that the inner part (**24**) has a guiding sleeve (**27**) for guiding the spring element (**28**), and in that means (**26**) which permit an adjustment of the inner part (**24**) into different angular positions by rotation about its longitudinal axis are provided on the inner part.

15. The plug-in connector system as claimed in claim 14, characterized in that the adjusting means comprise an adjusting portion (**26**) with a square cross section, which adjoins the guiding sleeve (**27**) in the front region of the inner part (**24**) and has a receiving bore (**25**) for receiving the ferrule (**23**), and on which the spring element (**28**) is supported by its front end.

16. The plug-in connector system as claimed in one of claims 12 to 15, characterized in that a side wall on the holders (**29** respectively has a resilient portion (**31**) with a latching element (**14**) arranged on it, and in that latching openings (**15**) into which the plug-in connectors (**13**) engage with their latching elements (**14**) on insertion in the adapter housing (**12**) are provided in the adapter housing (**12**).

17. The plug-in connector system as claimed in one of claims 12 to 16, characterized in that for fastening the fiber-optic cable (**32**), provided on the holder (**29**) is a crimping neck (**37**), which preferably consists of a metal, can be pressed with a snap fit into the through-bore (**34**) of the holder (**29**) and has a tube stub (**40**) protruding out of the holder (**29**) to the rear for the fastening of a crimping sleeve (**41**).

18. The plug-in connector system as claimed in one of claims 1 to 17, characterized in that the guiding sleeves (**45**) in the adapter (**11**) are combined into a number of groups, respectively comprising a number of guiding sleeves.

19. The plug-in connector system as claimed in claim 18, characterized in that two groups of six guiding sleeves (**45**) each are provided in the adapter (**11**).

20. The plug-in connector system as claimed in one of claims 1 to 19, characterized in that each plug-in connector (**13**) in the adapter (**11**) can be inserted into a rectangular insertion opening (**16**) with a width (w) of approximately 2.4 mm and a height (h) of approximately 3.4 mm.

* * * * *