SLC & MLC Hybrid

Nelson Duann
Product Marketing Manager
Silicon Motion, Inc.

Tel: +886-2-2219-6688
nelson.duann@siliconmotion.com.tw
3F, No. 96, Mingcyuan Rd., Sindian
City, Taipei, Taiwan

Santa Clara, CA USA
August 2008

Agenda

- **SSD Today & Challenges**
  - **The Hybrid SLC + MLC concept**
- **The Hybrid Technology**
- **About Silicon Motion**

SSD today & Challenges

- Why SSD have not taken off → #1 price..
  - 95% of SSD products today used SLC NAND components
  - SLC price is about 3X MLC with the same density
  - 90%+ of NAND output from flash makers is MLC NAND
  - SSD won't become mainstream applications without using MLC NAND

- What are the technical concerns to use MLC for SSD applications?
  - Performance -- longer programming time
  - Endurance – low program/erase cycles

Performance concern

- MLC is slow in host write CMD, especially for ran. write
  - NAND flash requires “erase” before writing data to old blocks.
  - MLC need 2 ms to 3 ms, and SLC need 1.5 ms to erase a block
  - MLC need average 800 us to program a page (strong page 200 to 400 us, weak page 1.2 to 1.5ms). SLC only need 200 us.
- How to improve MLC SSD performance?
  - NAND flash components might not be able to improve very much
  - Controller’s architecture in cache management and flash memory control

Endurance Concern

- MLC has limited endurance
  - The program and erase cycle of each MLC block is limited
  - MLC is around 5K to 10K cycles, SLC is 100k cycles
- How to improve endurance of SSD with MLC NAND?
  - Better wear-leveling algorithm –> Treat all NAND components as one memory unit (global wear-leveling)
  - Overcome data swapping endurance concern by storing the frequently updated data in the reliable area.

Suggested controller architectures

- Add caching mechanism
  - Bigger internal SRAM as cache
  - Utilize DRAM as cache
- Use both SLC and MLC (hybrid mode)

The Hybrid SLC+MLC Concept

	Pure SLC Based Flash	Pure MLC Based Flash
Performance	**Fast access speed** (2 times > MLC) Good!	**Slow access speed**
Durability	**Good endurance** (10~20 times > MLC) Good!	**Poor endurance** (5K-10K program/erase)
Cost	**Expensive** (2-3 times > MLC)	**Cheaper** Good!

Why not combine SLC & MLC chips in SSD?

Agenda

- SSD Today & Challenges
  - The Hybrid SLC + MLC concept
- The Hybrid Technology
- About Silicon Motion

Global Wear Leveling Technology

SMI Global Wear Leveling would even the erase count of all blocks, effectively wear level the entire SSD to extend the life expectancy..

- **Manage all NAND flash components as one unified flash memory.**
- **Map host device's logical addresses into NAND flash physical addresses equally and randomly.**
- **Endurance will be further improved when the total density increases.**

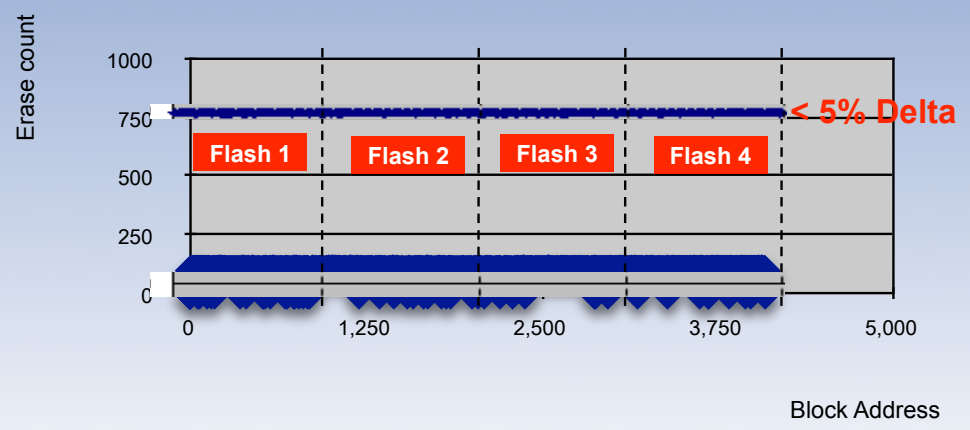

Example: SM2240
Program: Fill to 50% capacity, Copy 256M-> Compare >Delete
Flash Type: K9F8G08U0M x 4

SMI SLC + MLC Hybrid Technology

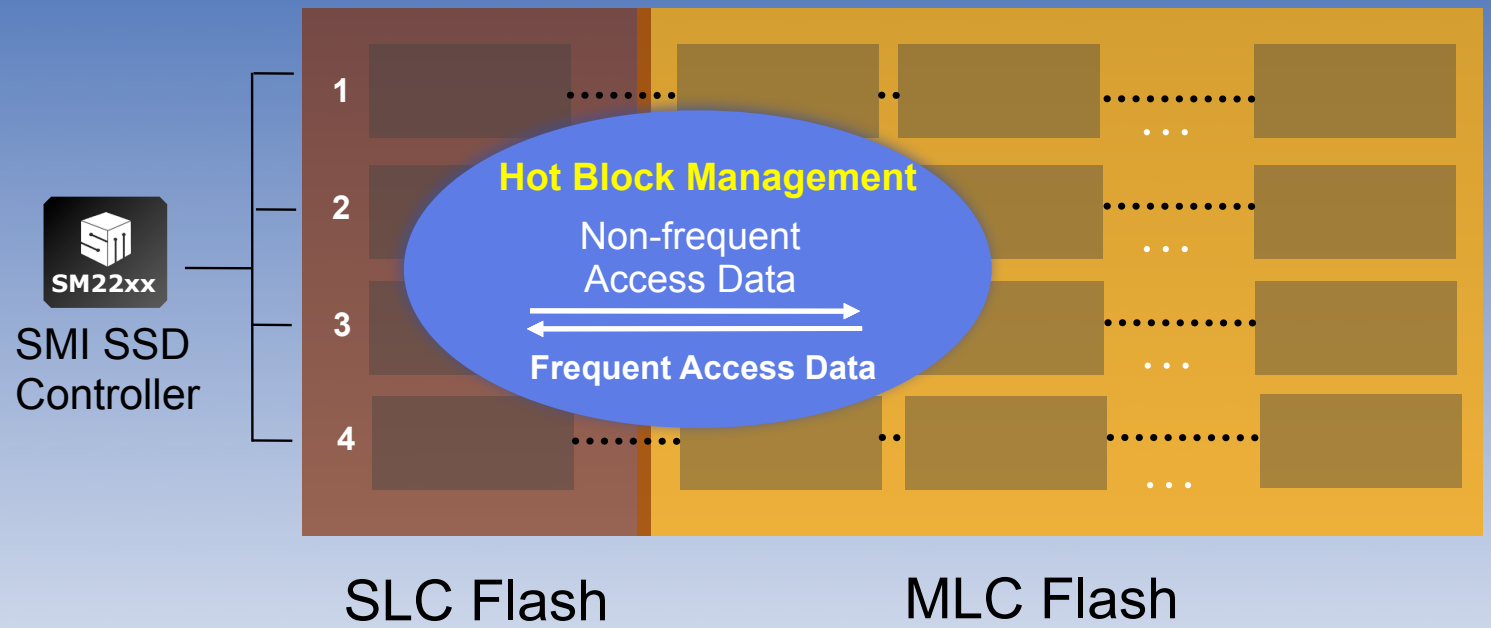

MLC cost with SLC performance and endurance!

Hybrid SSD Technology

- SMI's proprietary "Hot Block Filter" & Flash management would monitor the flash write status and pick up Hot Blocks
  - Hot Block means a block whose data is frequently updated
- Move "Hot (physical) Blocks" whose logical blocks are frequently updated into SLC area, for better performance & endurance
- Move 'Cold (physical) Blocks' whose logical blocks are less frequently updated into MLC, for storage

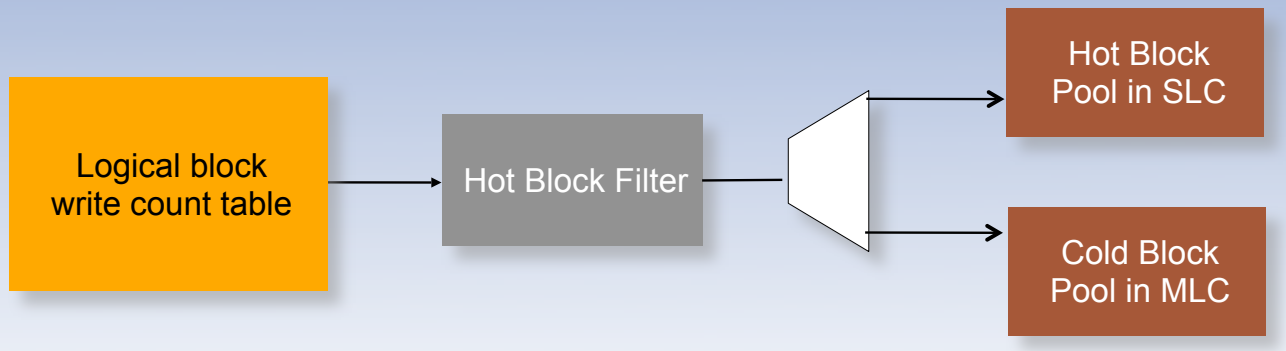

Hybrid Wear Leveling Result

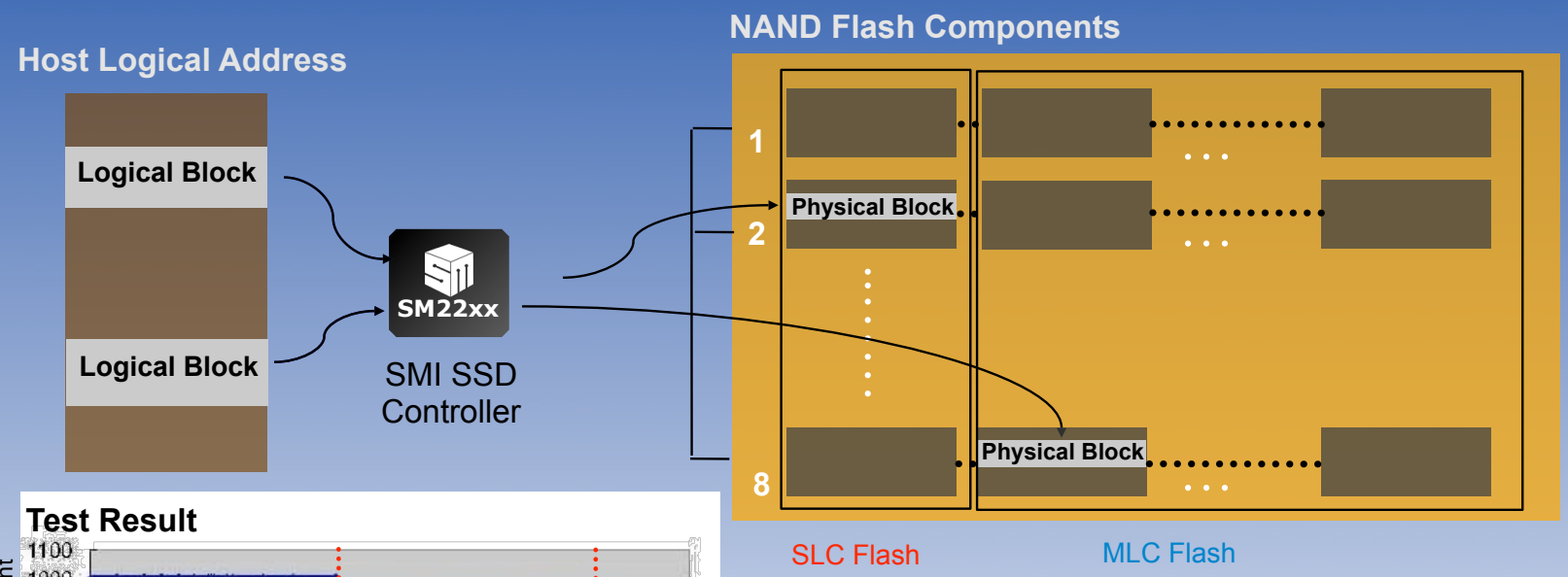

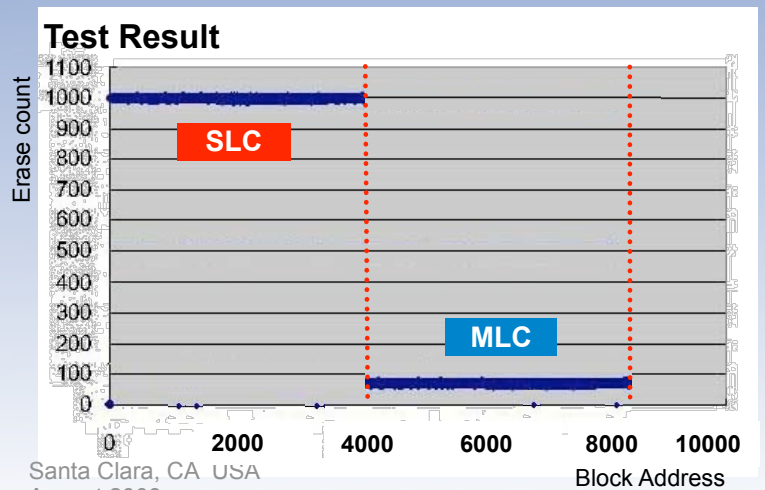

- Example: SM2240 (captured from FPGA)
- Program: Fill 5.5GB (6GB total). Copy 500MB data-> Compare ->Delete
- Flash Type: K9K8Gx2 + K9LBGx2

An Overview on SMI Hybrid SSD

- SMI hybrid SSD SLC/MLC ratio is configurable depends on the targeted application(s).
- Assuming overall frequent data is ‘X’ GB: Hybrid SSD = X GB in SLC + (total capacity – X)GB in MLC
  - Through “SMI Hot Block Filter”, ‘X’ GB frequent data will be automatically moved to SLC portion. Result in a hybrid SSD that performs as a pure SLC SSD in read/write & endurance, and save the cost difference with MLC.

Hybrid SLC/MLC SSD Benefits

- For Example: a 72 GB hybrid SSD (8GB SLC + 64GB MLC).
  - In a typical consumer application: if frequent updated data size is ~ 8GB, through Hot Block Filter of the hybrid SSD, the 8GB hot data will mostly located in SLC flash.

Benefits

- Cost: fraction of pure SLC
- Performance: 2 times > pure MLC
- Endurance: 3 times > pure MLC
- Data integrity as SLC
- User experience as the SLC

Agenda

- SSD Today & Challenges
  - The Hybrid SLC + MLC concept
- The Hybrid Technology
- About Silicon Motion

SMI WW Operations Support Global Focus

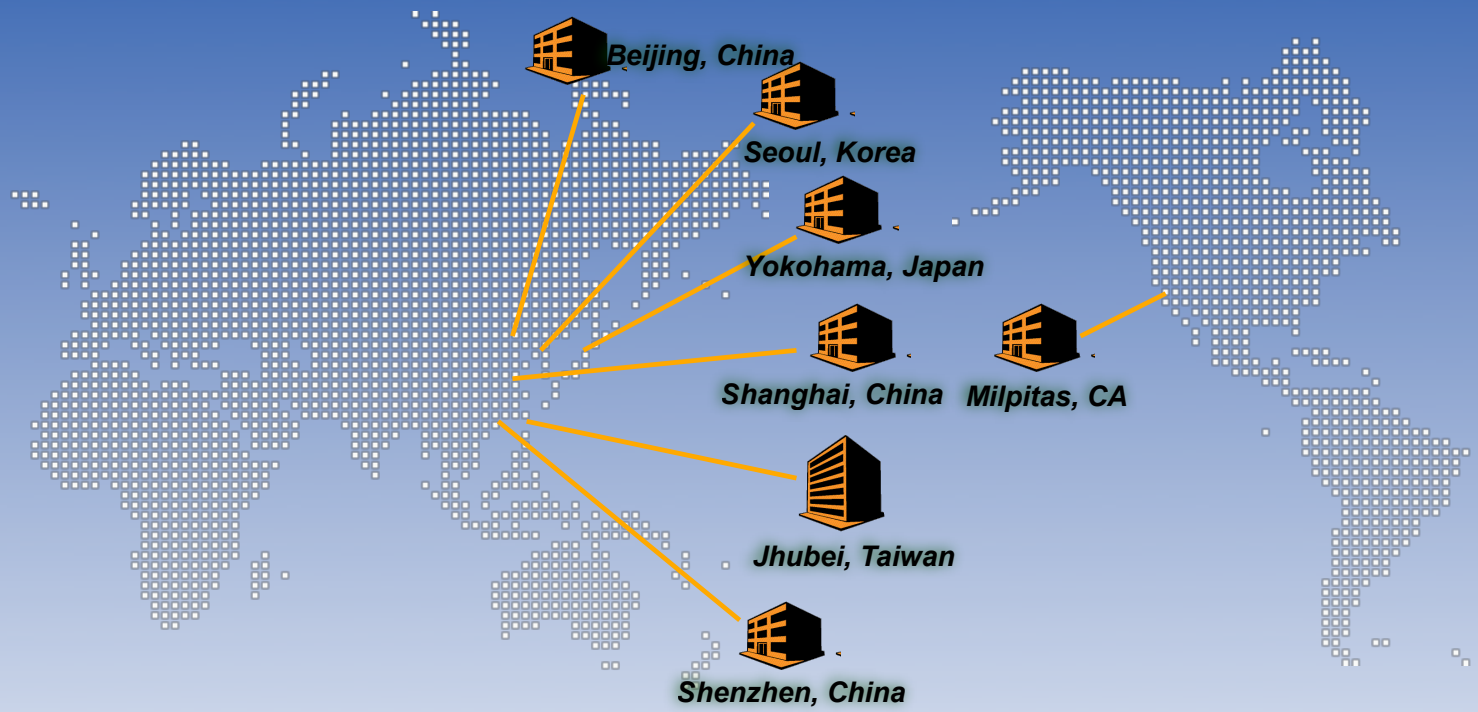

Headquarters:	Jhubei, Taiwan
Other Operations: Shanghai,	Seoul (Korea), Milpitas (USA), Shenzhen, and Beijing (China), Yokohama (Japan)
Employees:	600+ (380+ Engineers)
Distributors:	N. America, Europe, China, Singapore, Taiwan, Korea, Singapore

PATA/SATA SSD Product Roadmap

	Q2, '08	Q3, '08	Q4, '08	Q1, '09
PATA	**SM223** •CFA4.1 UDMA5 •2-CH, 8 CE/ch •R/W: 50/45 MB/s •4 bit RS ECC •Static WL within MU •MP: Now	**SM2231** •PATA, UMDA6 •2-CH, 8 CE/ch •R/W: 50/45 MB/s •13/24b 1KB BCH ECC •Global WL •MP: Q3'08	**SM2233** •PATA. UDMA6 •4-CH, 16 CE/ch •R/W: 100/80 MB/s •8bit BCH ECC •Global Wear Leveling •PATA- BGA-144 •MP: Q3,'08	
SATA		**SM2240** •SATA II, UDMA6 •4-CH, 16 CE/ch •R/W: 100/80 MB/s •8bit BCH ECC •Global Wear Leveling •SATA- QFP-128 •MP: Q3, '08	**SM2242** •SATA II, UMDA6 •4-CH, 16 CE/ch •R/W: 100/80 MB/s •13/24b 1KB BCH ECC •Global Wear Leveling •SATA- QFP-128 •MP: Q1, '09	**SM2250** •32-bit RISC CPU •SATA II, 8-CH, 16 CE/ch •R/W: 200/180MB/s •13/24b 1KB BCH ECC •External DRAM Buffer •High Speed NAND •MP: Q2 '09

Thank You!

Q&A

marketing@siliconmotion.com.tw