UNITED STATES PATENT AND TRADEMARK OFFICE

BEFORE THE PATENT TRIAL AND APPEAL BOARD

R.J. Reynolds Vapor Company,

Petitioner

v.

Fontem Holdings 1 B.V.

Patent Owner

U.S. Patent 8,393,331
Issue Date: March 12, 2013
Title: Electronic Atomization Cigarette

Inter Partes Review No. IPR2018-00627

DECLARATION OF DR. ROBERT H. STURGES REGARDING U.S. PATENT NO. 8,393,331

ECTO WORLD-SV3 EX1010
U.S. Patent No. 11,925,202

TABLE OF CONTENTS

Page

I. INTRODUCTION 1

A. Engagement 1

B. Background and Qualifications 1

C. Compensation and Prior Testimony 3

D. Information Considered 3

II. LEGAL STANDARDS FOR PATENTABILITY 4

III. OVERVIEW AND BACKGROUND OF THE 331 PATENT 8

A. Overview Of The 331 Patent 8

B. Prosecution History Of The 331 Patent 11

IV. PERSON HAVING ORDINARY SKILL IN THE ART 12

V. CLAIM CONSTRUCTION 14

VI. DESCRIPTION OF THE PRIOR ART THAT FORMS THE BASIS FOR UNPATENTABILITY 16

A. State Of The Art 16

B. Takeuchi (Ex. 1003) 29

VII. GROUND 1: CLAIMS 1-2 OF THE 331 PATENT ARE ANTICIPATED BY TAKEUCHI 33

A. The Electronic Circuit Board 33

B. Takeuchi Discloses Every Element of Claims 1-2 35

VIII. GROUND 2: CLAIMS 1-2 OF THE 331 PATENT ARE OBVIOUS OVER TAKEUCHI 72

IX. CONCLUSION 74

I. INTRODUCTION

A. Engagement

1. I have been retained by the law firm of Brinks Gilson & Lione on behalf of R.J. Reynolds Vapor Company to provide this Declaration concerning the technical subject matter relevant to the *inter partes* review petition concerning U.S. Patent No. 8,393,331 ("331 patent," Ex. 1001).[1] I have been asked to render an opinion regarding the validity of claims 1-2 (the "challenged claims").

B. Background and Qualifications

2. I retired from Virginia Polytechnic Institute ("Virginia Tech") on September 1, 2017 after 20 years' service as a Professor in the Departments of Mechanical and Industrial Systems Engineering at Virginia Tech. I look forward to moving from "Retiree" status to "Emeritus" status in the next few months. I am still substantially involved with the University in several ways. I am working on two projects with current Ph.D. level graduate students and maintain an on-campus office with all office privileges and a discretionary spending account. I also maintain laboratory space for projects on campus and at Virginia Tech's Corporate Research Center. Prior to joining Virginia Tech, I was first an Assistant Professor

[1] I refer to exhibit numbers that correspond to those I understand will be submitted with the Petition for *Inter Partes* Review.

and then later an Associate Professor in the Mechanical Engineering Department at Carnegie Mellon University in 1987-1997. I have a combined Bachelor of Science and Master of Science degree in mechanical engineering from M.I.T. and a Ph.D. in mechanical engineering from Carnegie Mellon University.

3. In my past work, I have extensively studied and designed various fluid power systems, including a robotic arm and robotic end effectors. In the latter, I applied fluid "resistors" that rely on porous media to provide resistance to flow. I have also applied heat transfer fundamentals to design and build variations of commercial steam engines used in my undergraduate labs at Carnegie Mellon University and my graduate course in Sustainability at Virginia Tech. In addition, I have taught undergraduate courses focused on fundamental mechanics and the conservation of energy, including basic principles of fluid flow and heat transfer.

4. Based on my background, experience, education and professional activities, I consider myself an expert in the fields of mechanical design, mechatronics, and manufacturing, including systems that employ heat, mass and fluid transfer.

5. My most recent Curriculum Vitae, including my publications and patents, is submitted herewith in Appendix A.

C. Compensation and Prior Testimony

6. I am being compensated at a rate of $400 per hour for my study and time in this matter. I am also being reimbursed for reasonable and customary expenses associated with my work and time in this investigation. My compensation is not contingent on the outcome of this matter or the specifics of my testimony.

7. The list attached at Appendix B identifies my past expert engagements.

D. Information Considered

8. My opinions are based on my years of education, research, and experience, as well as my investigation and study of relevant materials. In forming my opinions, I have considered, among other things, the 331 patent and its prosecution history, as well as the record of the three prior IPRs (IPR2014-01289, IPR2016-01299 and IPR2016-01438) involving the 331 patent, in addition to the prior art and other materials referred to herein.

9. I may rely upon these materials and/or additional materials to rebut arguments raised by the patent owner.

10. I reserve the right to supplement this Declaration in response to additional evidence that may come to light.

II. LEGAL STANDARDS FOR PATENTABILITY

11. In expressing my opinions concerning the subject matter of the claims of the 331 patent, I am relying upon certain legal principles that counsel has explained to me.

12. It is my understanding that, to anticipate a claim under 35 U.S.C. § 102, a prior art reference must teach every limitation of the claim.

13. It is also my understanding that a claimed invention is unpatentable under 35 U.S.C. § 103 as being obvious if the differences between the invention and the prior art are such that the subject matter as a whole would have been obvious at the time the invention was made to a person having ordinary skill in the art ("PHOSITA") to which the subject matter pertains. I also understand that the obviousness analysis takes into account factual inquiries including the level of ordinary skill in the art, the scope and content of the prior art, and the differences between the prior art and the claimed subject matter. I also understand that the prior art reference should be viewed as a whole.

14. I understand that in considering whether an invention is obvious, I may assess whether there are apparent reasons to combine known elements in the prior art in the manner claimed in view of interrelated teachings of multiple prior art references, the effects of demands known to the design community or present in the market place, and/or the background knowledge possessed by a person having

ordinary skill in the art. I also understand that other principles may be relied on in evaluating whether a claimed invention would have been obvious, and that these principles include the following:

- Combining prior art elements according to known methods to yield predictable results is likely obvious;
- Simple substitution of one known element for another to obtain predictable results is likely obvious;
- Use of a known technique to improve similar devices (methods, or products) in the same way, using the technique is obvious unless its actual application is beyond the level of skill in the art;
- Applying a known technique to a known device (method, or product) ready for improvement to yield predictable results is likely obvious;
- "Obvious to try" - choosing from a finite number of identified, predictable solutions, with a reasonable expectation of success;
- Known work in one field of endeavor may prompt variations of it for use in either the same field or a different one based on design

incentives or other market forces if the variations are predictable to one of ordinary skill in the art;

- Some teaching, suggestion, or motivation in the prior art that would have led one of ordinary skill to modify the prior art reference or to combine prior art reference teachings to arrive at the claimed invention may demonstrate obviousness, but proof of obviousness does not depend on or require showing a teaching, suggestion, or motivation to combine;
- Market demand, rather than scientific literature, can drive design trends and may show obviousness;
- In determining whether the subject matter of a patent claim would have been obvious, neither the particular motivation or avowed purpose of the named inventor controls;
- One of the ways in which a patent's subject matter can be proved obvious is by noting that there existed at the time of the invention a known problem for which there was an obvious solution encompassed by the patent's claims;
- Any need or problem known in the field of endeavor at the time of the invention and addressed by the patent can provide a reason for combining the elements in the manner claimed;

- "Common sense" teaches that familiar items may have obvious uses beyond their primary purposes, and in many cases a person of ordinary skill will be able to fit the teachings of multiple patents together like pieces of a puzzle;
- A person having ordinary skill in the art is also a person of ordinary creativity, and is not an automaton; and
- One should be cautious of using hindsight in evaluating whether a claimed invention would have been obvious.

15. In determining obviousness, I understand that evidence of objective indicia of non-obviousness (also known as "secondary considerations") is also considered and that this is to be done before any ultimate determination of obviousness is made. I have been advised that the following factors may be considered as secondary considerations: (1) a long-felt and unmet need in the art for the invention; (2) failure of others to achieve the results of the invention; (3) commercial success of the invention; (4) copying of the invention by others in the field; (5) whether the invention was contrary to accepted wisdom of the prior art; (6) expression of disbelief or skepticism by those skilled in the art upon learning of the invention; (7) unexpected results; (8) praise of the invention by those in the field; and/or (9) commercial acquiescence (licensing).

16. I also understand that, in order for secondary considerations to be relevant to the issue of obviousness, a patentee must establish a nexus between such secondary considerations and the claimed invention. Stated one way, the nexus requirement means that the secondary consideration is sufficiently derived from merits of the claimed invention, rather than other factors. I understand that if the patentee comes forward with a showing of one or more secondary considerations and the required nexus, then the burden of coming forward with evidence in rebuttal shifts to the party challenging the patent. Additionally, a party asserting invalidity may come forward with evidence of the absence of such secondary considerations or nexus. Further, it is my understanding that evidence of secondary considerations does not always overcome a strong showing of obviousness.

III. OVERVIEW AND BACKGROUND OF THE 331 PATENT

A. Overview Of The 331 Patent

17. The 331 patent discloses an electronic cigarette "that functions as substitutes for quitting smoking and cigarette substitutes." Ex. 1001 at 1:56-57. The electronic cigarette includes an LED, an air inlet, an electronic circuit board, a sensor, an atomizer and a liquid-supply. *Id*. at 2:34-37 ("A LED 1, a cell 2, an electronic circuit board 3, a normal pressure cavity 5, a sensor 6, a vapor-liquid separator 7, an atomizer 9, a liquid-supplying bottle 11 and a mouthpiece 15 are

sequentially provided within the shell 14."), 2:33-34 ("[A]n air inlet 4 is provided on the external wall of the shell 14."). Airflow passes from the air inlet 4 to an outlet in the mouthpiece 15, via the air passage 18, atomizer 9, aerosol passage 12, and gas vent 17. *Id.* at 3:15-17, 46-55.

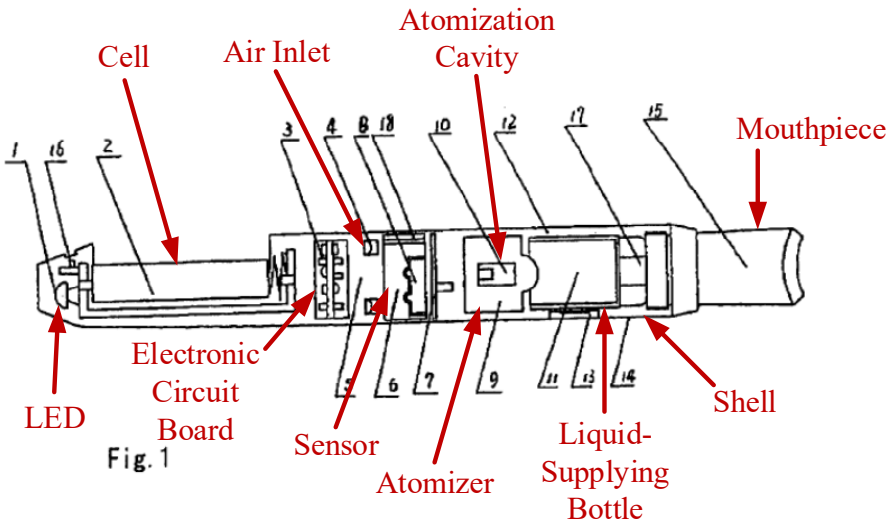

18. With reference to the annotated figure below, the atomizer 9 includes a porous body 27, an atomization cavity 10 and a heating wire 26. The porous body has a bulge 36 in contact with the solution storage porous body 28 in liquid-supplying bottle 11. *Id.* at 2:45-54, 63-66; 3:61-64. Liquid spent as a result of atomization is replenished from the liquid-supplying bottle by "capillary infiltration" through bulge 36 of the porous body 27. *Id.* at 3:61-64. "[T]he first piezoelectric element 23 on the atomizer 9 can be omitted, and the atomization of the nicotine solution will be made only by the heating element 26." *Id.* at 4:8-10.

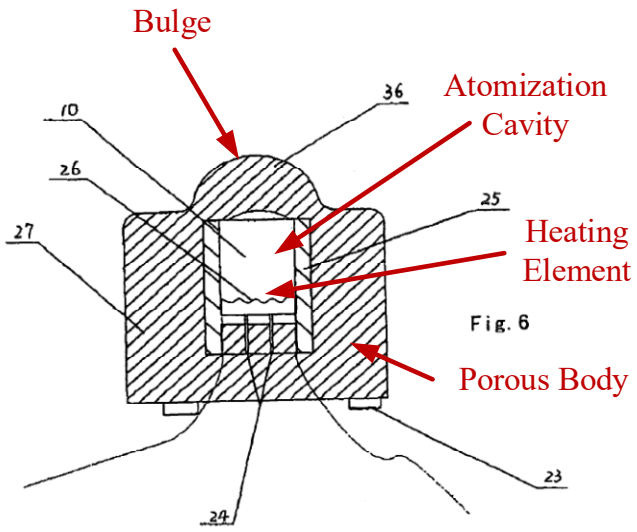

19. Claims 1-2 are the subject of my opinion. Claims 1-2 are reproduced below:

1. An electronic cigarette comprising;

a housing;

a mouth piece on the housing;

an LED at a first end of the housing;

an air inlet leading into the housing;

a battery within the housing;

an electronic circuit board within the housing;

a sensor within the housing;

an atomizer within the housing;

a stream passage within the housing leading from the inlet to the atomizer;

a cavity arranged in the atomizer;

a liquid-supply within the housing; and

an aerosol passage leading from the atomizer to the mouthpiece; and

with the liquid-supply in physical contact with the atomizer; and

a heating element within the cavity.

2. An electronic cigarette, comprising:

a housing;

a mouthpiece on the housing;

an LED at a first end of the housing;

an air inlet for providing air into the housing;

a battery and a sensor electrically connected to an electronic circuit board within the housing, with the sensor in a stream passage in the housing;

an atomizer within the housing, with the atomizer having a heating element within a cavity, and with the atomizer making contact with a liquid-supply, to provide for movement of liquid to the atomizer via capillary action; and

an aerosol passage extending from the atomizer to the mouthpiece.

B. Prosecution History Of The 331 Patent

20. I reviewed the file history of the 331 patent. In a final Office Action mailed October 30, 2012, the Examiner rejected the then pending independent

claim 85 based upon U.S. Patent No. 4,947,874 to Brooks et al. in view of U.S. Patent No. 5,497,791 to Bowen et al., finding that Brooks combined with Bowen discloses all the limitations, including "an electronic circuit board within the housing," and "the liquid-supply in physical contact with the atomizer." Ex. 1014-00075-77. The Examiner indicated that application claim 93, which depended from independent application claim 85 and added the limitation "a heating element within the cavity," would be allowable if rewritten in independent form (corresponding to issued Claim 1). Ex. 1014-00064-66, 80-81. The Examiner further indicated that application claims 101-104 (corresponding to issued Claims 2-5) were allowable, stating "The closest prior art of record neither teaches nor suggests an electronic cigarette having the claimed structural features, including an atomizer making contact with a liquid-supply so as to provide for movement of liquid to the atomizer via capillary action." *Id*.

IV. PERSON HAVING ORDINARY SKILL IN THE ART

21. I understand that the 331 patent must be reviewed through the eyes of a person having ordinary skill in the art (*i.e.*, a "PHOSITA"). I understand that the PHOSITA is presumed to know the relevant prior art. I am advised that that factors that guide the determination of level of ordinary skill in the art may include: the education level of those working in the field, the sophistication of the technology, the types of problems encountered in the art, the prior art solutions to

those problems, and the speed at which innovations are made may help establish the level of skill in the art.

22. It is my opinion that relevant and related art for the claims of the 331 patent includes, among other things, electromechanical devices with the ability to atomize liquids and deliver an aerosol to a user. Further, it is my opinion that the PHOSITA for the 331 patent is a person with at least the equivalent of a Bachelor's degree in electrical engineering, mechanical engineering, or biomedical engineering or related fields, along with at least 5 years of experience designing electromechanical devices, including those involving circuits, fluid mechanics and heat transfer. I base my opinions on my review of the 331 patent, the relevant prior art, including art disclosing electronic cigarettes that atomized a nicotine solution to deliver an aerosol to a user to simulate smoking, and my background in designing and developing systems that apply heat transfer and fluid mechanics.

23. For purposes of my opinions as set forth in this Declaration, I have been asked to apply the perspective of the PHOSITA as of April 2004. As of this date, I would have qualified as one of skill in the art according to the above definition.

24. I understand that in other IPR proceedings, PO and its expert represented that a PHOSITA for related patents would be a person with a mechanical or electrical engineering degree, industrial design degree, or similar

technical degree, or equivalent work experience, and 5-10 years of working in the area of electromechanical devices, including medical devices. This PHOSITA proposed by the PO in those proceedings is not significantly different from my definition of a PHOSITA. Further, my opinion would not change if this level of skill were applied.

V. CLAIM CONSTRUCTION

25. It is my understanding that, in an *inter partes* review proceeding, the terms of the challenged claims should be given their broadest reasonable interpretation, as understood by the PHOSITA and consistent with the disclosure of the 331 patent. I understand that, where a patent applicant provides an explicit definition of a claim term in the specification, that definition may control the interpretation of that term in the claim. I also understand that if no explicit definition is given to a term in the patent specification, the claim terms must be evaluated using the ordinary meaning of the words being used in those claims. I also understand that the words in the claims are to be evaluated using the perspective of a person of ordinary skill in the art. I have applied this standard to my understanding of the claims and the discussion of the prior art below.

26. In conducting my analysis, I have considered the terms used in claims 1-2 the 331 patent and what they mean. In my analysis, I have applied a meaning to the terms as they would have been understood by the PHOSITA.

27. The Board previously construed the term "liquid-supply" to mean "the liquid itself" in IPR2016-01299 concerning the 331 patent. Ex. 1011 at pp. 7-11. The Board considered the parties' proposed interpretations, the claim language, the specification, the file history and the relevant dictionary definitions when interpreting the term. *Id.* I agree with the Board's interpretation under the applicable BRI standard and the underlying reasoning as set forth in pages 7-11 of Ex. 1011. For purposes of my analysis, I have used the Board's construction for the term "liquid-supply" to mean "the liquid itself."

28. I understand that the Board previously construed the terms "atomizer," and "an LED at a first end of the housing" to mean "at least both the components that cause atomization and the mechanism that transfers liquid from the 'liquid-supply' to those components," and an LED at "the outer extent of some portion of the housing," respectively, in IPR2016-01299 concerning the 331 patent. Ex. 1011 at pp. 12-15. For purposes of my analysis, I have used the Board's constructions. I also understand that the Board previously construed the phrases "physical contact," and "cavity" to mean "direct contact," and "a hollow space," respectively, in IPR2014-01289 concerning the 331 patent. Ex. 1009 at pp. 8-9. I have applied these constructions for purposes of my analysis.

29. The preamble language of claims 1-2, which is the language before the word "comprising," is "an electronic cigarette." I understand that preamble

language in a claim acts as a claim limitation if it recites essential structure or steps, or if it is "necessary to give life, meaning, and vitality" to the claim. I also understand that a preamble is not considered a claim limitation where a patentee defines a structurally complete invention in the claim body and uses the preamble only to state a purpose or intended use for the invention.

30. In claims 1-2, the preamble does not recite any essential structure necessary or important for the claimed invention. Instead, the body of the claim fully recites the structure. In that regard, none of the claim limitations in claims 1-2 recites or relies in any way on the preamble language for "an electronic cigarette." Rather, the claim fully recites the limitations that define the invention and the preamble is not necessary to understand the invention. Indeed, the preamble language is not found in the body of claims 1-2 or any other claim depending therefrom. Further, the limitations that follow the preamble set out a complete structure and the preamble adds nothing to the understanding of that claimed structure. Thus, it is my opinion that the preamble language for "an electronic cigarette" is not a claim limitation.

VI. DESCRIPTION OF THE PRIOR ART THAT FORMS THE BASIS FOR UNPATENTABILITY

A. State Of The Art

31. Electronic Cigarettes ("e-cigarettes") were well-known before April 2004. In fact, they have been well-known since at least the mid-1990s, as

demonstrated by, for example, the Voges and Takeuchi references, discussed below. Moreover, the basics of the technology involved in e-cigarettes have been known since the 1930's. *See, e.g.*, Ex. 1020, U.S. Pat. No. 2,057,353 ("Whittemore") (a vaporizer patent).

32. By April 14, 2004, a great deal was known about e-cigarettes and the variety of ways they could be designed. *See, e.g.*, U.S. Pat. No. 6,155,268 ("Takeuchi," Ex. 1003) at 1:9-14; U.S. Pat. No. 5,894,841 ("Voges," Ex. 1006) at 2:12-14. A person of ordinary skill in the art would have known at least the following about the broad field of e-cigarettes at the time CN20040031182.0, from which the 331 patent claims priority, was filed.

33. An e-cigarette is a consumer product generally designed to replicate the function and some of the experience of a combustible cigarette. It generally allows a person to inhale an aerosol that contains the desired constituents, including nicotine and flavors. A skilled person knew that e-cigarettes came in different shapes and sizes, and that it was well-known that conventional drug delivery devices, such as inhalers, vaporizers, nebulizers, etc., could be used to deliver nicotine. *See, e.g.*, Ex. 1003, Takeuchi at 1:4-11; Ex. 1006, Voges at 3:7-15, 9:53-10:21.

34. An aerosol generally refers to a colloidal system of solid or liquid particles in a gas (*e.g.*, air). Mechanisms metering liquids into small particles

streams to produce these aerosols have been well known in the drug delivery industry, and have been regularly used in conventional drug inhalers, vaporizers, nebulizers, etc., including e-cigarettes. *See, e.g.*, Ex. 1003, Takeuchi at 1:40-56; Ex. 1006, Voges at 3:7-15, 9:53-10:21. Hence, a skilled person would have found it obvious to replace the drug in a handheld drug-delivery device with nicotine and use it as an e-cigarette. Mechanisms for producing aerosols were also known in the ink printing industry, and a skilled person knew that the teachings of the ink printing industry were directly applicable to e-cigarettes. *See, e.g.*, Ex. 1006, Voges at 3:62-4:67.

35. E-cigarettes differ from combustible cigarettes in the way aerosols are formed. In combustible cigarettes, the aerosol formation process is driven by the heat created by the combustion of tobacco. An e-cigarette generally is a device for electrically generating nicotine based liquid aerosols for inhalation by a smoker. The liquid contains nicotine and a carrier as well as any desired flavoring or other ingredients. The e-cigarette therefore includes a means to store the liquid, create droplets from the liquid of the proper particle size distribution, entrain and disperse them in an air stream to generate aerosols, and enable a person to inhale the aerosols on demand.

36. As of at least April 2004, there were several known means to store liquid nicotine in e-cigarettes, many of which adapted technologies that stored

liquid drug in drug inhalers or applied ink storage mechanisms from the neighboring field of ink-jet technologies. Early cigarette substitutes employed a liquid reservoir that contained liquid nicotine or other liquid extracts from a cigarette. *See, e.g.*, Ex. 1003, Takeuchi at 4:35-38, 5:28-32; Ex. 1006, Voges at 5:58-61. Many early cigarette substitutes also employed a porous carrier impregnated with a liquid nicotine containing composition through which an air stream could be drawn to volatilize nicotine. *See, e.g.*, Ex. 1006, Voges at 2:32-35. It was well-known in the field of e-cigarettes to store or transport liquid in porous/fibrous bodies positioned inside the device. *See, e.g.*, U.S. Pat. No. 6,598,607 ("Adiga," Ex. 1005) at 2:44-48, 3:1-3; U.S. Pat. No. 3,200,819 ("Gilbert," Ex. 1021) at 1:14-22, 3:23-26. It was also well-known in the neighboring field of ink-jet printers to store liquid ink in containers including porous/fibrous materials. *See, e.g.*, U.S. Pat. No. 4,771,295 ("Baker," Ex. 1008) (a thermal ink jet pen patent) at Abstract, 1:48-65; U.S. Pat. No. 5,703,633 ("Gehrer," Ex. 1015) (an ink container patent) at 3:7-15, 8:63-67. The small pores act as small capillaries that absorb liquid. At the same time, the small pores provide sufficient pressure to control the flow of liquid through capillary action. Finally, the small pores also provide communication with atmospheric pressure without liquid leaking, preventing a vacuum from forming in the storage area as the fluid is removed. *See, e.g.*, Ex. 1008, Baker at Abstract, 1:48-65, 2:44-66. A skilled person

also knew that porous bodies were used to control the flow of liquid through a liquid flow path. *See, e.g.*, U.S. Pat. No. 6,501,052 ("Cox 052," Ex. 1022) (a flow rate controlled capillary aerosol generator patent) at 5:43-45, 6:25-30, 8:16-27. Additionally, it would have been obvious to a skilled person that foam or porous materials prevent sloshing of the liquid in a device such as a drug-delivery device or an e-cigarette, which were handheld and carried around by a consumer, and maintain liquid contact with a wick regardless of the orientation of the device. *See, e.g.*, Ex. 1005, Adiga at 2:44-48, 3:1-3, Fig. 1. Porous bodies were also known to be used within a liquid supply to prevent it from drying out and thereby keeping it operational. *See, e.g.*, Ex. 1015, Gehrer at 5:14-29, 8:18-34.

37. In addition to preventing sloshing and spilling, porous and/or fibrous bodies storing liquid were also known to be used for pressure equilibrium within a liquid supply to properly control liquid transport. *See, e.g.*, Ex. 1008, Baker at Abstract, 1:7-10, 1:48-58; Ex. 1015, Gehrer at Abstract, 2:24-47, 3:7-15, 8:63-67. Besides porous bodies, it was well-known to store liquid drugs in flexible containers or pouches in pressurized systems, as the type of storage was a design choice. *See, e.g.*, U.S. Pat. No. 6,234,167 ("Cox 167," Ex. 1023) (an electrical smoking system patent) at 11:31-40. Therefore, in view of the ubiquitous disclosure of porous/fibrous/flexible materials to store liquid, it would have been

obvious to a skilled person to use any of these materials to store liquid within an e-cigarette with predictable results.

38. There were also several known means to create, from a liquid, droplets of the proper particle size distribution, entrain, and disperse them in an air stream to generate aerosols. Techniques that can aerosolize a small volume of liquid from the liquid supply, on demand (rapidly and at high frequency), are particularly suited to e-cigarettes and had long been known by 2004. One common technique is to atomize a liquid drug or nicotine into aerosols on-demand. *See, e.g.*, Ex. 1003, Takeuchi at 1:39-43, 1:59-64; Ex. 1006, Voges at 1:11-13. An atomizer has components used to convert liquid into aerosols and generally includes a hollow space where liquid from the liquid supply is transported and aerosolized. Common techniques for converting liquid into aerosols included using heating and/or piezoelectric elements. These components can be located in any part of the atomizer so as to contact the transported liquid directly or indirectly. It was also well known that these elements can be used independently or combined together to convert liquid into aerosols. *See, e.g.*, Ex. 1003, Takeuchi at Figs. 3-7; Ex. 1006, Voges at 3:62-4:48, 10:50-65. In fact, the 331 patent specification acknowledges it by stating that these elements can be used in any combination, such as (1) piezoelectric and heating element together, (2) heating element alone, or (3) piezoelectric element alone, without offering any implementation details or any

suggestion that one configuration is better than another. *See, e.g.*, Ex. 1001 at 3:49-55, 4:8-21.

39. One known method of creating aerosolized liquid particles was to use piezoelectric elements to generate high frequency standing waves on the fluid-gas interface that break liquid into very small droplets. *See, e.g.*, Ex. 1007, U.S. Pat. No. 4,990,939 ("Sekiya") (a bubble jet printer patent) at 1:41-53. The droplets can form the aerosol or they can be further conditioned to form an aerosol with smaller particles. Another known method of creating aerosolized liquid particles was to utilize heaters, with low thermal mass and sufficient capacity to deliver the needed power, to rapidly vaporize the liquid. Such heaters were able to rapidly reach temperatures that vaporized or made into an aerosol the immediately surrounding liquid while the power is applied, and then rapidly cooled to stop the vaporization process once the power was removed. The high temperature vapor then condensed and consolidated into small particles to form an aerosol. *See, e.g.*, Ex. 1003, Takeuchi at 5:1-20. It was also well-known that the volumetric concentration of particles in the aerosol generated by these techniques can be too high for direct inhalation with an e-cigarette. Accordingly, mixing air was introduced into the e-cigarette housing to manage the volumetric concentration of the aerosolized particles and to convey them to the mouthpiece for inhalation. *See, e.g.*, Ex. 1006, Voges at 6:19-21, 7:4-14.

40. On-demand formation of small droplets from a liquid supply was also well-known in the neighboring field of "ink-jet" printing, through either piezoelectric or thermal "bubble-jet" techniques, and were known to be applicable to e-cigarettes. *See, e.g.*, Ex. 1006, Voges at 3:66-4:5. Atomizers for thermal "bubble-jet" printing included heaters that act like a mini-gun to eject a column of liquid by generating a momentary high-pressure bubble of gas at the base of the column, which is open at the top. *See, e.g.*, Ex. 1006, Voges at 4:6-33.

41. Capillary action was a well-known technique for moving fluids to a heater. For example, using a porous wick as the capillary flow path has been known since as early 1930s. *See, e.g.*, Ex. 1020, Whittemore at p. 1, 1:50-2:25. Capillary action generally refers to the ability of liquid to flow in narrow spaces, such as that of a wick or a capillary tube, due to the greater adhesion of a liquid to a solid surface than the internal cohesion of the liquid itself. *See, e.g.*, U.S. Pat. No. 5,124,200 ("Mallonee," Ex. 1024) (a liquid transfer wick patent) at 1:18-35. When one end of a capillary tube is placed in the liquid supply, a contact angle occurs between the liquid and an inner wall of the capillary tube, with surface tension pulling the liquid inside the tube until there is an opposing force overcoming the surface tension force. A well-known technique to aerosolize liquid transported in the capillary tube was to place heating elements at the other end of the capillary tube, either surrounding the tube, on the tube or inside the tube. *See, e.g.*, Ex. 1003,

Takeuchi at 2:13-16; 6:4-7. Capillary action draws liquid from the liquid supply to replenish the area within the tube vacated by the aerosolized liquid. *See, e.g.*, *id*. at 5:47-52; Ex. 1006, Voges at 4:11-20. Takeuchi also discloses the use of porous materials such as fiber to facilitate movement of the fluid via capillary action. *See, e.g.*, Ex. 1003, Takeuchi at 3:35-50.

42. It was well-known that liquid drawn into a capillary tube by capillary action can be adjusted by properly selecting the material and pore size of the capillary tube according to the liquid's surface tension and wetting properties. *See, e.g.*, Ex. 1003, Takeuchi at 2:17-25, 3:42-4:8. It was also well-known to combine a pressurized system with the existing capillary action to further modulate the rate at which the liquid is being transported in the atomizer. *See, e.g.*, Ex. 1023, Cox 167 at 4:62-5:18, 12:21-25. A skilled person would have understood that the net amount of liquid within the capillary tube would be determined by the sum total of the forces, such as external pressure, gravity, capillary force, etc., acting on the liquid supply and the capillary tube. *See, e.g.*, Ex. 1003, Takeuchi at 3:62-4:8. Capillary action has been used for decades to transport liquid nicotine and ink from a liquid supply to atomizers in e-cigarettes and printing heads in ink-jet printers. *See, e.g.*, Ex. 1006, Voges at 4:6-34; Ex. 1015, Gehrer at Abstract. As discussed earlier, a skilled person would have known that these teachings were applicable in the e-cigarette industry. *See, e.g.*, Ex. 1006, Voges at 3:7-15, 3:62-4:67.

43. It was well-known that the heating elements could advantageously be made from materials that would have been robust under the elevated operating temperatures, so that they would not be unduly oxidized and would not change their electrical resistance. In addition, a heating element could be selected such that its thermal expansion characteristics advantageously precluded undue mechanical stresses as the temperature cycles from hot to cool. Heating elements made of platinum, nickel chromium, and iron chromium aluminum and containing rare earth elements were well-known to be acceptable choices because these elements demonstrated such favorable properties. *See, e.g.*, U.S. Pat. No. 5,743,251 ("Howell," Ex. 1004) (an aerosol generator patent) at 3:52-4:11; U.S. Pat. No. 4,797,692 ("Ims," Ex. 1025) (a thermal ink jet printer patent) at 7:1-4, 7:42-44; U.S. Pat. No. 5,666,977 ("Higgins," Ex. 1026) (an electrical smoking article patent) at 4:25-46. It would also have been well-known to a skilled person that heating elements came in different shapes, such as coils, straight wires or rods, thin film wires, plates, etc. And, selecting any shape over another would have been an obvious design choice. *See, e.g.*, Ex. 1003, Takeuchi at Figs. 3-7; EP Pat. App. Pub. No. EP 0 358 114 A2 ("Brooks 114," Ex. 1027) (an aerosol drug delivery article patent) at 1:19-32, 2:9-17, 2:42-3:4, 13:19-32; Ex. 1020, Whittemore at Figs. 2-3. It was also a common practice, for example, in the semiconductor industry, to implement thin film resistors using thin film wires. *See, e.g.*, U.S. Pat.

No. 7,284,424 ("Kanke," Ex. 1028) (a thin film resistor patent); U.S. Pat. No. 5,224,265 ("Dux," Ex. 1029) (a method to fabricate thin film wiring structures patent); U.S. Pat. No. 6,620,659 ("Emmma," Ex. 1030) (a semiconductor integrated circuit fabrication patent). Similarly, their location and orientation within an e-cigarette housing would also have been a well-known and obvious design choice. *See, e.g.*, Ex. 1003, Takeuchi at Figs. 3-7; Ex. 1020, Whittemore at Figs. 2-3. Such elements, including thin film resistors made from a wire that is very small, can also be easily powered by simple DC sources, such as disposable or rechargeable consumer batteries, making them ideal for a consumer product. Widespread availability and ubiquitous knowledge about the materials and shapes of the heating and/or piezoelectric elements would have advantageously allowed a skilled person to design and manufacture a low-cost and robust e-cigarette. Furthermore, a skilled person would have known that widely known orientation, location, and structure of these elements allowed most efficient design of an e-cigarette based on several criteria, such as maximizing the contact of the heating or piezoelectric element with the liquid material, maximizing efficiency of an e-cigarette, minimizing air flow obstruction, etc. Therefore, it would have been obvious to a skilled person to replace, combine, orient, or locate them in any manner that suits a particular e-cigarette design, and a skilled person would have

recognized and found it obvious that each of these could be selected, utilized, and applied with straightforward, predictable results.

44. It was also well-known that these elements can also be easily controlled by standard, low-cost electronic circuits. It was standard practice to use these elements with circuits coupled with simple electronic sensors, such as pressure actuated switches, etc. *See, e.g.*, Ex. 1003, Takeuchi at 6:23-6:25; Ex. 1006, Voges at 6:8-11. It was well-known that, for example, sensors can detect conditions such as when negative pressure is generated within the device by the act of inhalation. When the person places the e-cigarette to his/her lips and inhales, it draws air into the device. The airflow creates a pressure drop through the e-cigarette that is detected by the pressure sensor and signals to the electronic circuit the need to power the piezoelectric or heating elements and generate aerosol. The airflow entrains the generated aerosol to carry the particles into the mouth and pulmonary tract. Further, it was well-known that logic within the circuit can be applied to apply power to any e-cigarette components such as the aerosol generator at the desired time, duration, rate, and level. *See, e.g.*, Ex. 1003, Takeuchi at 6:55-59; Ex. 1006, Voges at 6:52-65. A skilled person would have understood that control circuits, whether digital or analog, and including commonplace components of electronic circuits, such as sensors, LEDs, microchips, microprocessors, Read Only Memory (ROM), Read and Write Memory (RAM),

clocks, power supply and the like, or a combination of any of the above, are very commonly implemented on an electronic circuit board for miniaturized applications, such as the hand-held device in Brooks, since the 1960's, and thus necessarily, and inherently, include electronic circuit boards. *See, e.g.*, U.S. Pat. No. 5,745,985 ("Ghosh," Ex. 1016) (a method of attaching a microchip to a circuit board patent); U.S. Pat. No. 4,945,448 ("Bremenour," Ex. 1018) (a memory cartridge for a circuit board patent); U.S. Pat. No. 4,676,237 ("Wood," Ex. 1031) (an inhaler device patent). In the alternative, these components are widely available and an ordinarily skilled person would have found it obvious to combine and use them in any way necessary.

45. Further, a PHOSITA would have known that electronic circuits were used to determine the state of a device, provide control functions and perform a variety of other functions such as providing feedback to the person on the state of the device via simple electronic indicators. "Usually, the valve plate is disconnected from the power contactor. When the cigarette is smoked, the valve plate is sucked away from air intake vents to connect the power contactor and the indicator gives out light." Chinese Utility Model Pub. No. 1233436A ("Hongbin"), Ex. 1032-00008. Indicator lamps, such as LEDs (light emitting diodes), were well-known in the art. *See, e.g.*, Ex. 1003, Takeuchi at 7:2-7; Ex. 1006, Voges at 7:47-50. Therefore, it would have been obvious to a skilled person to use an LED not

only to indicate the status of the liquid fill but also to simulate the lighted aspect of a cigarette. *See, e.g.*, Hongbin, Ex. 1032-00008-9. Furthermore, it would have been obvious to a skilled person that LEDs could be attached to any part of the e-cigarette housing and would have been a straightforward design choice.

B. Takeuchi (Ex. 1003)

46. Like the 331 patent, Takeuchi describes a flavor-generating device for enjoying simulated smoking that generates an aerosol "by heating a liquid flavor source without relying on combustion." Ex. 1003 at 1:4-9. Takeuchi illustrates the flavor-generating device in annotated Fig. 1 below.

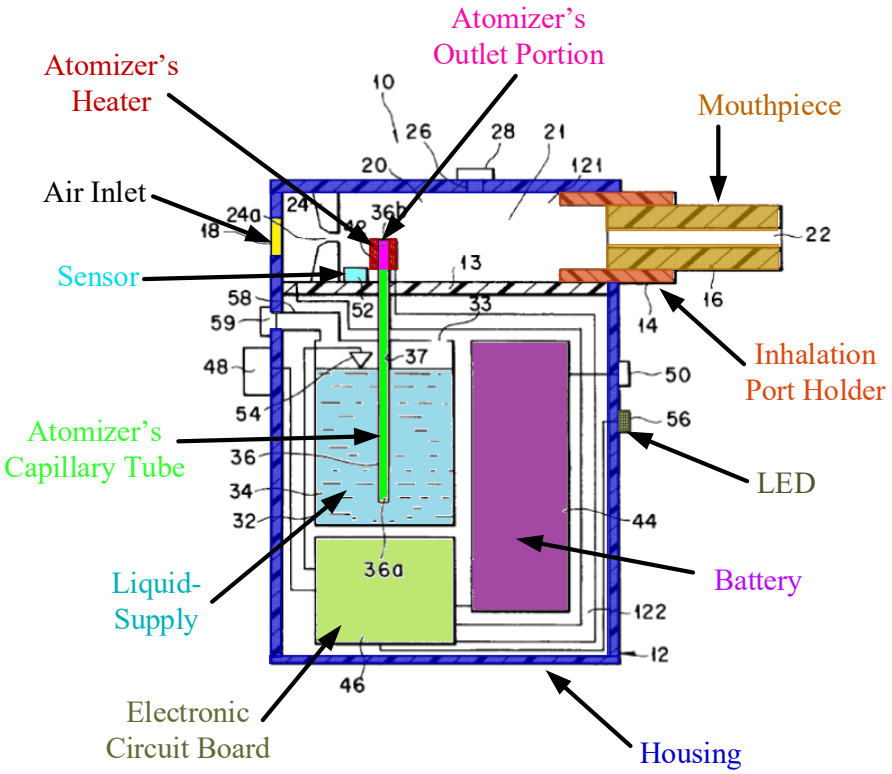

Ex. 1003, Fig. 1 (Annotated)

47. A PHOSITA would have considered Takeuchi highly relevant to the design of an e-cigarette in the early 2000's, because Takeuchi expressly teaches a "flavor-generating device for enjoying simulated smoking." This flavor is inhaled by a smoker after it has been volatilized from a heated liquid. In particular, the disclosed Takeuchi system includes "heating a liquid flavor source without relying on combustion." Ex. 1003 at 1:3-8. Takeuchi's simulated smoking inhalers include all the same standard components within the housing as recited in the 331 patent, including a housing (casing 12, upper chamber 121, and lower chamber 122), an air inlet (air intake port 18), an outlet (mouthpiece 16 inserted into inhalation port holder 14), an electronic circuit board (control circuit 46), a sensor (sensor 52), an atomizer (at least capillary tube 36, outlet portion 36b[2], heater 42), a battery (power

[2] I have reviewed Takeuchi's reference and noticed that it contains a simple typographical error. Although Figures 1, 2A, 2B, 2C, 6, and 7 all show element 36b as the outlet port and the specification correctly describes it as the outlet port in some instances (s*ee* Ex. 1003 at 4:66, 5:1, 6:59), Takeuchi's specification erroneously describes 36a as the outlet port in multiple other instances (*see id.* at 6:11; 7:58, 61, 67; 8:3, 7, 20, 23, 25, 36, 39, 42-43), other than in Col. 5, line 50 where 36a is correctly described as the lower end of the capillary tube.

source 44), an LED (lamp/light emitting diode 56), and a liquid-supply (liquid flavor source 34 in liquid container 32). *Id.* at 4:29-60, 5:28-6:29, 6:46-62, 7:2-7.

48. When used as a "simulated smoking article," the liquid (liquid flavor source 34) contains "tobacco components such as tobacco extracts and a tobacco smoke condensate." *Id.* at 5:43-46. The atomizer of Takeuchi that transports and vaporizes the liquid includes at least a liquid passageway (capillary tube 36, lower end 36a, outlet portion 36b) and a heating element (heater 42), as these components participate in facilitating atomization. *Id.* at 5:47-6:29. The liquid passageway transports the liquid by capillary action from a liquid container to a heating element where the liquid is vaporized and enters the gas passageway. *Id.* at 2:1-25, 5:47-6:29. The gas passageway is in the upper chamber 121, running between the "air inlet port for introducing the air" and the "inhalation port through which a user inhales a flavor." *Id.* at 2:1-6.

49. Takeuchi illustrates numerous heating element configurations that can be used interchangeably in the flavor-generating device. *See* Ex. 1003 at 8:16-48, 9:35-44, 10:22-27, 10:50-67, Figs. 2A-C, 3-7, 9-11, 14-15. All configurations utilize capillary action to move the fluid to the heating element. The capillary action is generated by using either a capillary tube, a gap or space between at least two spaced-apart plates, or an intercommunicating pore structure (*i.e.*, porous body) filled in an enclosure that extends into the liquid container. *Id.* at 3:36-42,

11:32-40, 12:27-32. For example, capillary action moves liquid through the liquid passageway 37, which is defined by the capillary tube 36. *Id.* at 5:47-52, Figs. 1-5, 14, and 15. In one embodiment, Takeuchi discloses a "rod-like" heater 74 mounted in the liquid passageway (*e.g.*, capillary tube). *Id*. at 8:22-23. As shown below, Figure 4 illustrates the "rod-like heater 74" mounted within the capillary tube 36 of Figure 1.

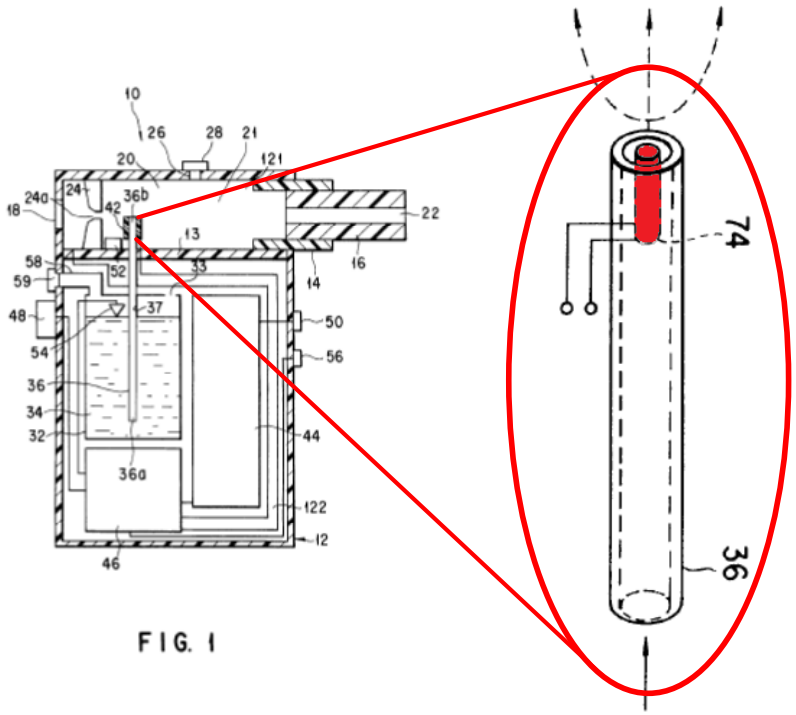

FIG. 1

FIG. 4

Ex. 1003, Figs. 1, 4 (Annotated)

50. In operation, as shown in Figure 1 above, a user's inhaling action is sensed by a sensor 52 and a control circuit 46 activates the heater 42, which vaporizes the liquid in the liquid passageway 37. *Id.* at 7:51-63. The user's

inhalation also creates an air stream from the air inlet port 18 to the mouthpiece 16 where the air mixed with the vaporized liquid is inhaled by the user. *Id.* at 7:48-8:15.

VII. GROUND 1: CLAIMS 1-2 OF THE 331 PATENT ARE ANTICIPATED BY TAKEUCHI

51. It is my opinion that Takeuchi discloses each and every limitation of claims 1-2 of the 331 patent, and thus anticipates claims 1-2.

A. The Electronic Circuit Board

52. Claims 1 and 2 recite "an electronic circuit board within the housing." Takeuchi discloses this feature. Specifically, Takeuchi discloses an electronic circuit board (control circuit 46) within the lower chamber 122 of the housing (casing 12). Ex. 1003, Takeuchi at 4:35-38, 6:23-25, 6:55-62, Fig. 1. Takeuchi discloses that the electronic circuit (control circuit 46) also includes signal processing and control that are hallmarks of electronic circuitry on a circuit board. *Id.* at 6:55-62, 7:51-56, 2:29-33.

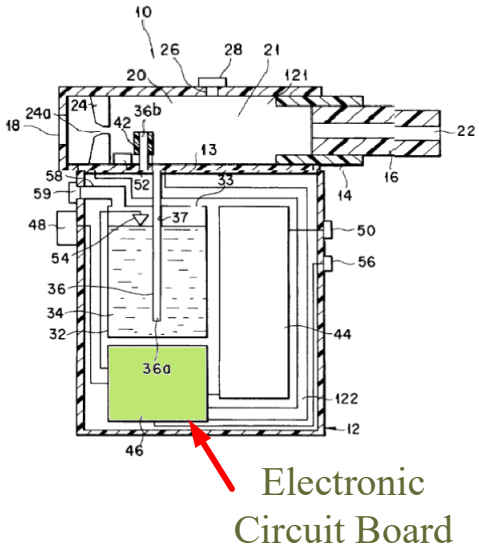

53. With respect to Takeuchi's control circuit 46, as discussed *supra* in ¶¶44-45, a PHOSITA would have understood this to be an electronic circuit board. A PHOSITA would have understood that control circuits, whether digital or analog, and including commonplace components of electronic circuits that are used for signal processing and control such as sensors, LEDs, microchips, microprocessors, Read Only Memory (ROM), Read and Write Memory (RAM), and the like (or combinations thereof), are very commonly implemented on an electronic circuit board for miniaturized applications, such as the hand-held device in Brooks (Ex. 1027), since the 1960's, and thus necessarily, and inherently, include electronic circuit boards. *See e.g.*, Ex. 1016, Ghosh (a patent directed to a method of attaching a microchip to a circuit board); Ex. 1017, U.S. Pat. No. 4,208,005 ("Nate") (method for mounting parts on circuit boards); and Ex. 1018, Bremenour (a patent directed to a memory cartridge for a circuit board). Moreover,

established treatises on the packaging of electronic devices and systems taught printed circuit boards (PCB) exclusively for receiving bonded chips and passive components. *See, e.g.*, Ex. 1019, ("Dally") at pp. 3-5, 129-134. Thus, a PHOSITA would have understood from the disclosure of Takeuchi that control circuit 46 necessarily, and inherently, includes an electronic circuit board. Finally, since this is a small item as per the invention objective requiring small components along with a digital display, a PHOSITA would have known that the control circuit would be a circuit board.

54. Ex. 1019 is a compilation of pages from the book James W. Dally, *Packaging of Electronic Systems: A Mechanical Engineering Approach* (John Corrigan and John M. Morriss eds., 1990) ("Dally") from my personal library. Ex. 1019 includes the title page, copyright page, table of contents, and pages 3-5, 21, 129-134 of the Dally book.

55. I have examined Ex. 1019 and it is a true and correct copy of the pages from the Dally book. The Dally book is available for inspection and copying at the offices of Brinks Gilson & Lione, Suite 3600 NBC Tower, 455 Cityfront Plaza Drive, Chicago IL 60611-5599.

B. Takeuchi Discloses Every Element of Claims 1-2

56. As illustrated in the claim charts below, Takeuchi discloses every limitation of claims 1-2.

57. Below is a claim chart explaining where and how the preamble language "An electronic cigarette comprising" is disclosed.

Claim 1.[a]	Takeuchi
1.[a] An electronic cigarette comprising:	I do not believe that the preamble is a claim limitation, but even if I assume it is for purposes of my evaluation, Takeuchi discloses an electronic cigarette. Specifically, Takeuchi discloses a "simulated smoking article" that generates flavor droplets for inhalation, *e.g.*, that contain tobacco components, which serves as a substitute for combustible cigarettes. Ex. 1003 at 1:3-8, 5:40-46. Takeuchi further discloses that the "simulated smoking article," or electronic cigarette, includes components that use electricity. *Id.* at 4:35-38. **<u>Takeuchi</u>**: "The present invention relates to a flavor-generating device for enjoying inhalation of flavor or for enjoying simulated smoking, and more particularly, to a flavor-generating device for generating flavor which is to be inhaled by a user by heating a liquid flavor source without relying on combustion." Ex. 1003 at 1:3-8. "To be more specific, it is possible for the liquid flavor source 34 to contain extracts from various natural products and/or components thereof depending on the use of the flavor-generating device. For example, where the device is used as a simulated smoking article, it is possible for the liquid flavor source 34 to contain tobacco components such as tobacco extracts and a tobacco smoke condensate." *Id.* at 5:40-46.

58. Below is a claim chart explaining where and how the claim language "a housing" is disclosed.

Claim 1.[b]	Takeuchi
1.[b] a housing;	Takeuchi discloses a housing, *i.e.*, casing 12, the inner space of which "is partitioned into an upper chamber 121 and a lower chamber 122." Ex. 1003 at 4:29-38, Fig. 1. Casing 12 is an outside wall of the embodiment shown in annotated Fig. 1 below. Therefore, Takeuchi discloses an electronic cigarette comprising a housing (casing 12, upper chamber 121, and lower chamber 122). **<u>Takeuchi</u>**: 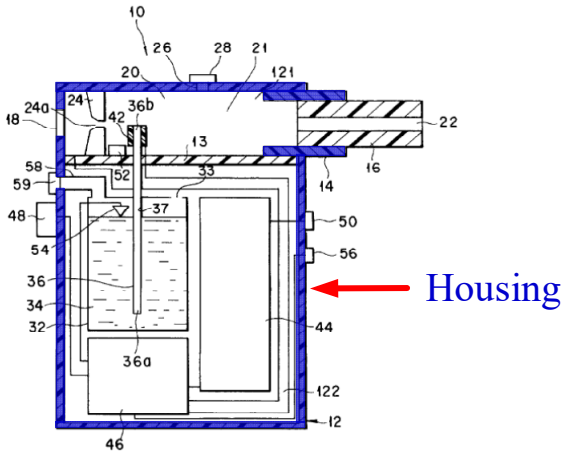 Ex. 1003 at Fig. 1 (annotated). "As shown in FIG. 1, the flavor-generating device 10 includes a casing 12 made of plastic, metal, ceramic, wood, etc. The inner space of the casing 12 is partitioned into an upper chamber 121 and a lower chamber 122 by a partition wall 13. As will be described herein later, the upper chamber 121 is used as a gas passageway 20 for forming a gaseous stream of a flavor which is to be inhaled by a user. On the other hand, the lower chamber 122 is used as a housing for housing a liquid container 32, a power source 44 and a control circuit." *Id.* at 4:29-38.

59. Below is a claim chart explaining where and how the claim language "a mouth piece on the housing" is disclosed.

Claim 1.[c]	Takeuchi
1.[c] a mouth piece on the housing;	Takeuchi discloses a "mouth piece 16 having an inhalation port 22 through which a user inhales a flavor is detachably inserted into the holder 14." Ex. 1003 at 4:39-47, Fig. 1. Takeuchi thus discloses a mouth piece on the upper portion of the housing (casing 12 on upper chamber 121). *Id.* The mouth piece is identified in annotated Fig. 1 below. **<u>Takeuchi:</u>** 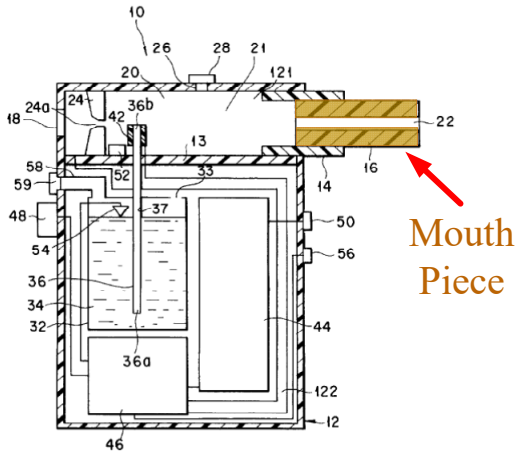 Ex. 1003 at Fig. 1 (annotated). "An inhalation port holder 14 defining a cylindrical opening is mounted at one side end portion of the upper chamber 121 of the casing 12. A mouth piece 16 having an inhalation port 22 through which a user inhales a flavor is detachably inserted into the holder 14. The mouth piece 16, which is directly taken in the mouth of a user, is made of, for example, a plastic material or wood. Incidentally, it is possible to insert a filter into the holder 14 in place of using the mouth piece 16." *Id.* at 4:39-47.

60. Below is a claim chart explaining where and how the claim language "an LED at a first end of the housing" is disclosed.

Claim 1.[d]	Takeuchi
1.[d] an LED at a first end of the housing;	Claim 1 recites "an LED at a first end of the housing." I understand that the Board previously construed this term to mean an LED at "the outer extent of some portion of the housing." Ex. 1011 at pp. 13-15. Takeuchi discloses LED 56 "arranged on the outside surface of the lower chamber 122 of the casing 12." Ex. 1003 at 7:2-7, Fig. 1. As shown in annotated Fig. 1 below, LED 56 is located at the right-hand outer portion of the housing (casing 12, upper chamber 121, and lower chamber 122). Therefore, Takeuchi teaches an LED at a first end of the housing by virtue of LED 56 being on an outer surface of the housing, *i.e.*, casing 12. 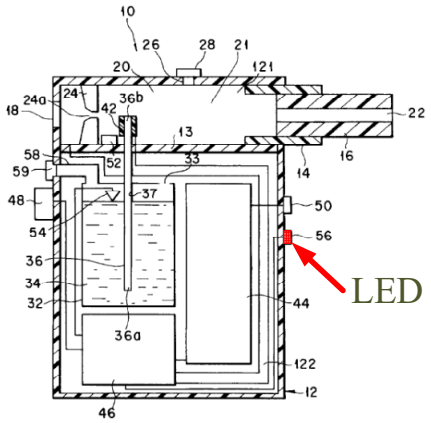 In addition, even if there were a requirement that the LED be located at a specific end of the housing, Takeuchi would render this limitation obvious to a person of skill in the art because placing a LED on another end of the casing would have been a predictable variation yielding a predictable result – *i.e.*, a functioning light located somewhere else on the device. *See* ¶45 *supra*. **<u>Takeuchi:</u>**

Claim 1.[d]	Takeuchi
	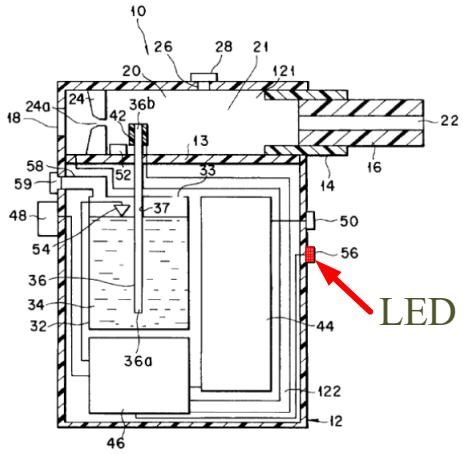 Ex. 1003 at Fig. 1 (annotated). "Also, an electrical display means, e.g., a lamp 56 which may be constituted by a light emitting diode, is arranged on the outer surface of the lower chamber 122 of the casing 12 in order to inform the user that the remaining amount of the liquid flavor source 34 within the liquid container 32 is small. Each of the liquid amount sensor 54 and the lamp 56 is connected to the control circuit 46 so as to be operated under control of the control circuit 46." *Id.* at 7:2-9.

61. Below is a claim chart explaining where and how the claim language "an air inlet leading into the housing" is disclosed.

Claim 1.[e]	Takeuchi
1.[e] an air inlet leading into the housing;	Takeuchi discloses this feature. Takeuchi describes an air inlet (air intake port 18) at the left end of the housing that leads into the upper chamber 121. Ex. 1003 at 4:48-50, 8:5-15, 9:8-12, Fig. 1. The air inlet is identified in annotated Fig. 1 below. **<u>Takeuchi:</u>**

Claim 1.[e]	Takeuchi
	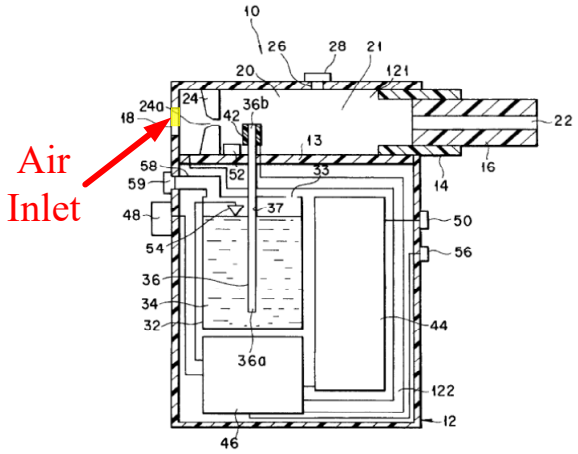 Ex. 1003 at Fig. 1 (annotated). "On the other hand, an air intake port 18 for introducing the air into the upper chamber 121 is formed on the other side portion of the upper chamber 121." *Id.* at 4:48-50. "The gasified flavor source is mixed with the main air introduced through the air intake port 18 and the squeeze hole 24a into a region around the outlet port 36a of the capillary tube 36 in accordance with the inhaling action of the user and, then, the mixture is transferred into the inhalation port 22. The amount of the air introduced through the outer air inlet port 26 can be changed during the inhaling action, if necessary, by controlling the adjusting shutter 28. It follows that the taste of the air containing a flavor, which is transferred to the inhalation port 22, can be changed appropriately in accordance with the preference of the user." *Id.* at 8:5-15. "The air intake port 18 like one shown in FIG. 1 is provided at the closed end (lower end) of the upper chamber 121. A mouthpiece 161 may be detachably inserted directly, i.e., without through a holder, into the open end portion (upper end portion) of the upper chamber 121." *Id.* at 9:8-12.

62. Below is a claim chart explaining where and how the claim language "a battery within the housing" is disclosed.

Claim 1.[f]	Takeuchi
1.[f] a battery within the housing;	Takeuchi discloses a battery ("power source 44," "such as a primary battery (dry battery), or a secondary battery (rechargeable battery)"). As shown in annotated Fig. 1 below, battery (power source 44) is within the lower chamber 122 of the housing (casing 12, upper chamber 121, and lower chamber 122). Ex. 1003 at 4:35-38, 6:12-17, Fig. 1. **<u>Takeuchi:</u>** 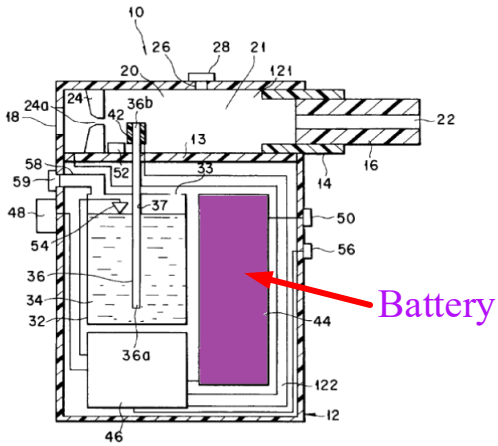 Ex. 1003 at Fig. 1 (annotated). "On the other hand, the lower chamber 122 is used as a housing for housing a liquid container 32, a power source 44 and a control circuit." *Id.* at 4:35-38. "An electric power is supplied from a power source 44 detachably mounted within the lower chamber 122 of the casing 12 to the electric heater 42. It is desirable to use as the power source 44 a DC power source available on the market such as a primary battery (dry battery), or a secondary battery (rechargeable battery)." *Id.* at 6:12-17.

63. Below is a claim chart explaining where and how the claim language "an electronic circuit board within the housing" is disclosed.

Claim 1.[g]	Takeuchi
1.[g] an electronic circuit board within the housing;	Takeuchi discloses an electronic circuit board (control circuit 46) within the lower chamber 122 of the housing (casing 12, upper chamber 121, and lower chamber 122). Ex. 1003 at 4:35-38, 6:23-25, 6:55-62, Fig. 1. Takeuchi discloses in detail that the electronic circuit (control circuit 46) also includes signal processing and control that are hallmarks of electronic circuitry on a circuit board. *Id*. at 6:55-62 ("The signal processing and control are performed within the control circuit 46 in accordance with, for example, a known analog control, a two-position control or a combination thereof."), 7:51-56 ("As a result, an inhaling action signal is transferred from the sensor 52 to the control circuit 46. Then, under the control of the control circuit 46, an electric power is supplied from the power source 44 to the heater 42 so as to turn the heater 42 on."), 2:29-33. As I explained in ¶¶44-45 and 52-55 *supra*, a PHOSITA would have understood Takeuchi's control circuit 46 to be an electronic circuit board. **<u>Takeuchi:</u>**

Claim 1.[g]	Takeuchi
	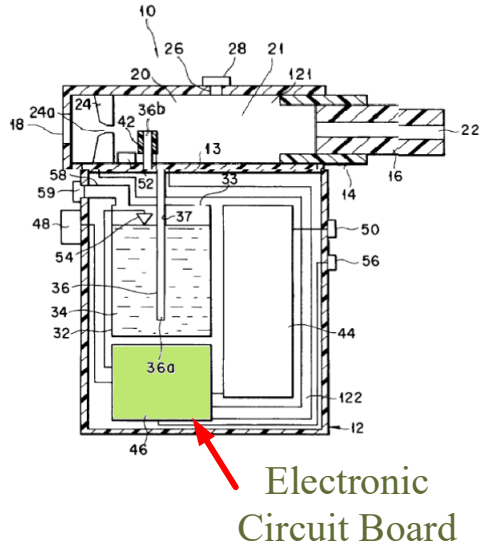 Ex. 1003 at Fig. 1 (annotated). "On the other hand, the lower chamber 122 is used as a housing for housing a liquid container 32, a power source 44 and a control circuit [46]." *Id.* at 4:35-38. "The heater 42 and the power source 44 are driven under the control of the control circuit 46 fixed within the lower chamber 122." *Id.* at 6:23-25. "The control circuit 46 serves to start up the heater 42 based on the signal from the heater switch 48 or in accordance with the inhaling action of the user based on the signal from the sensor 52 so as to gasify the liquid flavor source 34 at the outlet portion 36b of the capillary tube 36. The signal processing and control are performed within the control circuit 46 in accordance with, for example, a known analog control, a two-position control or a combination thereof." *Id.* at 6:55-62. "As a result, an inhaling action signal is transferred from the sensor 52 to the control circuit 46. Then, under the control of the control circuit 46, an electric power is supplied from the

Claim 1.[g]	Takeuchi
	power source 44 to the heater 42 so as to turn the heater 42 on." *Id.* at 7:51-56. "It should be noted in particular that the heater can be controlled on the basis of a signal from a sensor for detecting the inhaling action of the user, with the result that the flavor can be supplied to the user with a high stability." *Id.* at 2:29-33. "The lower chamber 122 is partitioned by a partition wall 131 into an upper sub-chamber 122a, which houses the control circuit 46, and a lower sub-chamber 122b, which houses the electric power source 14. In the device shown in FIG. 8, the electrical connections are essentially the same as those in the device shown in FIG. 1, and thus are not shown in FIG. 8." *Id.* at 9:1-7.

64. Below is a claim chart explaining where and how the claim language "a sensor within the housing" is disclosed.

Claim 1.[h]	Takeuchi
1.[h] a sensor within the housing;	Takeuchi discloses a sensor (sensor 52) within the housing (casing 12, upper chamber 121, and lower chamber 122). Takeuchi describes that the "sensor 52 or detecting the inhalation action of the user is arranged within the upper chamber 121 of the casing 12." Ex. 1003 at 6:25-28, 32-42, 46-62, 7:51-56, Fig. 1. **<u>Takeuchi:</u>**

Claim 1.[h]	Takeuchi
	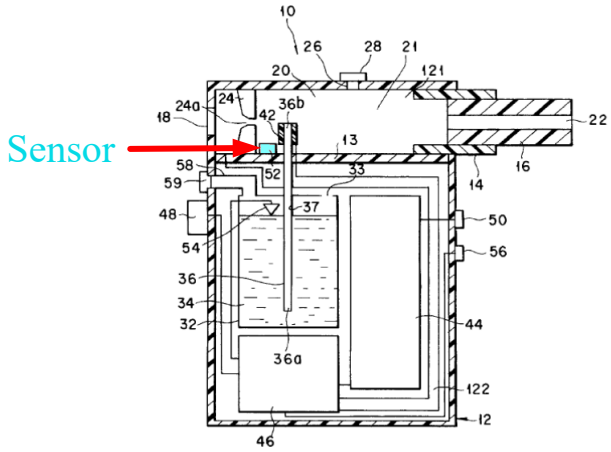 Ex. 1003 at Fig. 1 (annotated). "To the control circuit 46, a switch 48 for the heater 42 which can independently turn the heater on, and a sensor 52 for detecting the inhalation action of a use are connected." *Id.* at 6:25-28. "When the device is not used, operation of the device can be ceased by turning the power source switch 50 off manually. Of course, when the device is used, firstly the power source switch is turned on. Further, the heater switch 48, when turned on after the power source switch 50 is turned on, can drive the heater 42 independently of the detection, by the sensor 52, of the inhalation action of a user. That is, after the power source 44 is driven, the heater can be made into a heated state by turning on the heater switch 48. When the control circuit 46 detects the on state of the heater switch 48, it ceases the operation of the sensor 52." *Id.* at 6:32-42. "The sensor 52 for detecting the inhaling action of the user is arranged within the upper chamber 121 of the casing 12, and is positioned between the squeeze plate 24 and the heater 42. It is possible to use as the sensor 52 a general pressure sensor for detecting a change in the pressure within the chamber 121 as a change in electrical resistance, as a change in electrical capacitance or as a piezoelectric electromotive force, or a

Claim 1.[h]	Takeuchi
	rocking vane type sensor for detecting a gas stream within the chamber 121. The control circuit 46 serves to start up the heater 42 based on the signal from the heater switch 48 or in accordance with the inhaling action of the user based on the signal from the sensor 52 so as to gasify the liquid flavor source 34 at the outlet portion 36b of the capillary tube 36. The signal processing and control are performed within the control circuit 46 in accordance with, for example, a known analog control, a two-position control or a combination thereof." *Id.* at 6:46-62. "As a result, an inhaling action signal is transferred from the sensor 52 to the control circuit 46. Then, under the control of the control circuit 46, an electric power is supplied from the power source 44 to the heater 42 so as to turn the heater 42 on." *Id.* at 7:51-56.

65. Below is a claim chart explaining where and how the claim language "an atomizer within the housing" is disclosed.

Claim 1.[i]	Takeuchi
1.[i] an atomizer within the housing;	Takeuchi discloses "an atomizer within the housing." I understand that the Board previously construed the term "atomizer" to include "at least both the components that cause atomization and the mechanism that transfers liquid from the 'liquid-supply' to those components." Ex. 1011 at pp. 12-13. Takeuchi discloses a portion of an electronic cigarette that includes both components that cause atomization, including at least a heater 42, and components that transfer liquid flavor source 34 to the heater 42, including at least a liquid passageway 37 constituted by a capillary tube 36 with outlet portion 36b (which is a cavity in the top of the capillary tube). Takeuchi further discloses that the capillary tube 36 is "inserted within the liquid container" (Ex. 1003 at 5:47-49),

Claim 1.[i]	Takeuchi
	and thus the capillary tube 36 is not a part of the liquid container but rather inserted into it. In use, the heater turns the liquid into aerosol and the liquid passageway moves the liquid to the heater by capillary action so that it can be atomized. Ex. 1003 at Abstract; 4:26-28, 6:4-12, 7:48-8:4, 8:22-23. 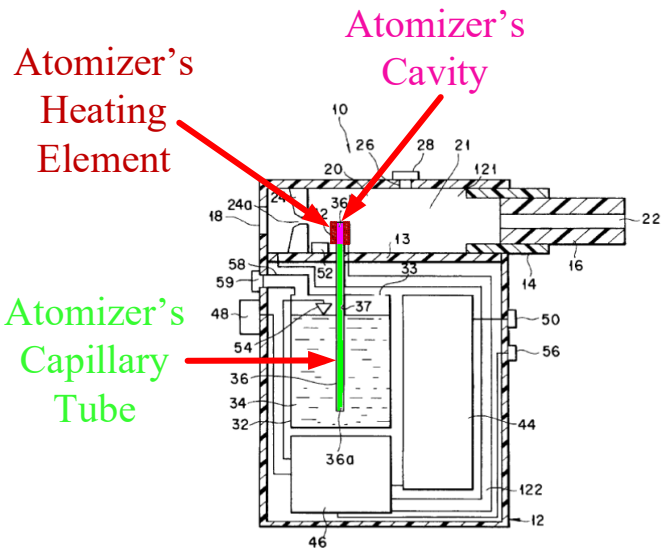 Ex. 1003, Takeuchi at Fig. 1 (Annotated) Specifically, Takeuchi teaches an atomizer including a capillary tube (capillary tube 36) which works together with a heating element (heater 42) to facilitate vaporization in a cavity of the tube (outlet portion 36b), *i.e.*, the capillary tube transports the liquid (liquid flavor source 34) by capillary force to the heater 42, where the heater 42 gasifies the liquid (as shown in Fig. 1) in the outlet portion (36b). Ex. 1003 at 6:4-12, 55-59, 7:57-63. Takeuchi also discloses that the heater can be a rod-like heater 74 placed inside the outlet port 36b of the capillary tube 36. Ex. 1003 at 8:22-23, Fig. 4. 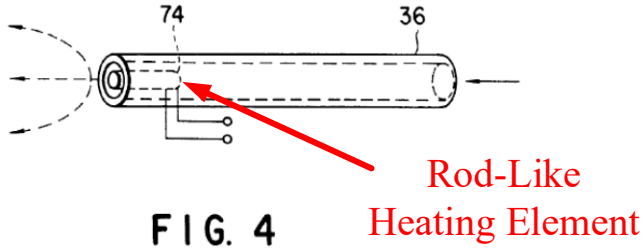

Claim 1.[i]	Takeuchi
	Therefore, Takeuchi teaches an atomizer including both the components that cause atomization (heater 42) and the mechanism (liquid passageway, such as capillary tube 36) that transfers liquid from the liquid-supply (liquid flavor source 34) to those components. **<u>Takeuchi:</u>** 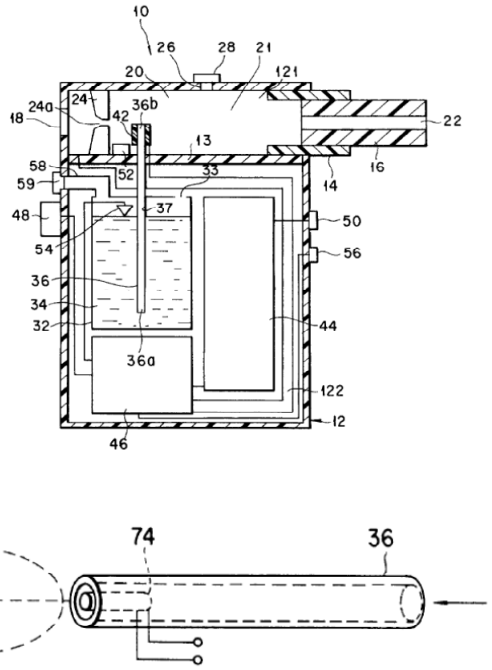 FIG. 4 Ex. 1003 at Figs. 1, 4. "At least one liquid passageway is provided in fluid communication with the liquid flavor source at its first end portion and with the gas passageway at its second end portion. The liquid passageway transports the liquid flavor source therethrough by capillary force. A heater heats and evaporates the liquid flavor source at the second end portion of the liquid passageway." *Id.* at Abstract.

Claim 1.[i]	Takeuchi
	"FIG. 1 shows the construction of a flavor-generating device 10 according to one embodiment of the present invention. In the device 10, the liquid passageway is constituted by a capillary tube." *Id.* at 4:26-28. "The capillary tube 36 for transporting the liquid flavor source by the capillary force is inserted within the liquid container. The capillary tube 36 defines a liquid passageway 37 for the liquid flavor source, and its lower end 36a is positioned in the vicinity of the bottom of the liquid container 32." *Id.* at 5:47-48. "The upper end portion of the capillary tube 36 protrudes into the upper chamber 121 of the casing 12 somewhat downstream of the squeeze plate 24 and is equipped with the heater 42 serving to gasify the liquid flavor source 34. In the embodiment shown in FIG. 1, the heater 42 consists of a tubular body mounted to the capillary tube 36 and having an inner diameter equal to that of the capillary tube 36. In other words, the outlet port 36a of the liquid passageway 36 is formed by the heater 42 itself." *Id.* at 6:4-12. "The control circuit 46 serves to start up the heater 42 based on the signal from the heater switch 48 or in accordance with the inhaling action of the user based on the signal from the sensor 52 so as to gasify the liquid flavor source 34 at the outlet portion 36b of the capillary tube 36." *Id.* at 6:55-59. "Specifically, where the device 10 is used for inhaling a flavor, the power source switch 50 is turned on first by a user. Then, the mouth piece 16 is taken in the mouth of the user for the inhaling action through the inhalation port 22. As a result, an inhaling action signal is transferred from the sensor 52 to the control circuit 46. Then, under the control of the control circuit 46, an electric power is supplied from the power source 44 to the heater 42 so as to turn the heater 42 on.

Claim 1.[i]	Takeuchi
	In this step, the liquid flavor source 34 is already transported to the outlet port 36a of the capillary tube 36 by the capillary force of the capillary tube 36 as shown in FIG. 2A. If the heater 42 is turned on under this condition, the liquid flavor source 34 within the outlet port 36a is instantly gasified by the heat generated from the heater 42 as shown in FIG. 2B so as to be supplied into the gas passageway 20. Upon gasification of the liquid flavor source 34 within the outlet port 36a by the heating with the heater 42, the liquid flavor source 34 is newly supplied from the liquid container 32 into the outlet port 36a of the capillary tube 36 by the capillary force of the capillary tube 36, as shown in FIG. 2C. In this fashion, supply and gasification of the liquid flavor source 34 are repeated within the outlet port 36a of the capillary tube 36." *Id.* at 7:48-8:4. "In the modification shown in FIG. 4, a rod-like heater 74 is inserted into the outlet port 36a of the capillary tube 36." *Id.* at 8:22-23.

66. Below is a claim chart explaining where and how the claim language "a stream passage within the housing leading from the inlet to the atomizer" is disclosed.

Claim 1.[j]	Takeuchi
1.[j] a stream passage within the housing leading from the inlet to the atomizer;	Takeuchi discloses a stream passage (gas passageway 20) within the upper chamber 121 of the housing (casing 12, upper chamber 121, and lower chamber 122). Takeuchi further discloses that the "gas passageway 20 is defined within the upper chamber 121 of the casing 12, between the air intake port 18 and the inhalation port 22." Therefore, the stream passage (gas passageway 20) leads from the inlet (air intake port 18) to the atomizer (*i.e.*, the heater 42, capillary tube 36 and outlet portion 36b) and eventually to the inhalation port 22. Ex. 1003 at 4:33-35, 50-52, 61-67, Fig. 1.

Claim 1.[j]	Takeuchi
	<u>Takeuchi:</u> 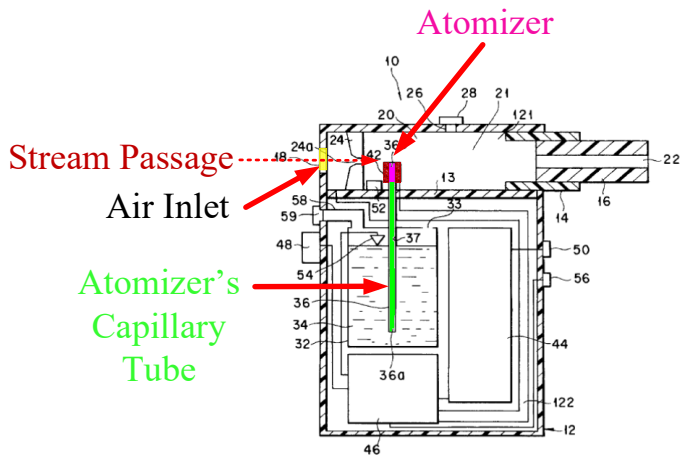 Ex. 1003 at Fig. 1 (annotated). "As will be described herein later, the upper chamber 121 is used as a gas passageway 20 for forming a gaseous stream of a flavor which is to be inhaled by a user." *Id.* at 4:33-35. "The gas passageway 20 is defined within the upper chamber 121 of the casing 12, between the air intake port 18 and the inhalation port 22." *Id.* at 4:50-52. "A squeeze plate 24 having a squeeze hole 24a formed in the central portion is arranged within the gas passageway 20 and positioned close to the air intake port 18. The squeeze hole 24a of the squeeze plate 24 act to regulate or direct the air introduced from the intake port 18 selectively toward [an] outlet portion 36b of a capillary tube 36 described in detail below." *Id.* at 4:61-67.

67. Below is a claim chart explaining where and how the claim language "a cavity arranged in the atomizer" is disclosed.

Claim 1.[k]	Takeuchi
1.[k] a cavity arranged in the atomizer;	Takeuchi discloses "a cavity arranged in the atomizer." I understand that the Board previously construed the term "cavity" to mean "a hollow space." Ex. 1009 at p. 8. Takeuchi discloses a cavity (outlet portion 36b), which is a hollow space, within the heater 42 at the end of the capillary tube 36, as shown below in Fig. 1. Fig. 2B is an enlarged view of the tube (capillary tube 36) defining a liquid passageway (liquid passageway 37) for the transport of the liquid-supply (liquid flavor source 34), entering the cavity (outlet portion 36b) where it is atomized by the heating element (heater 42). Ex. 1003 at 7:57-8:5, 5:1-11; Figs. 1, 2A, 2B, 2C, 3-7. 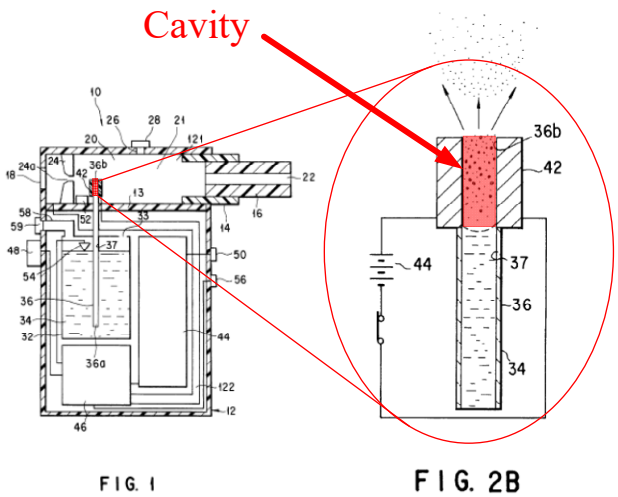 Ex. 1003, Takeuchi at Figs. 1 And 2B (Annotated) Similarly, Takeuchi discloses a cavity in the atomizer when the heating element is internal to the capillary tube. As shown in annotated Figs. 1 and 4 below, Takeuchi discloses a cavity (within outlet portion 36b) arranged within the atomizer (at least capillary tube 36, outlet portion 36b, heater 42).

Claim 1.[k]	Takeuchi
	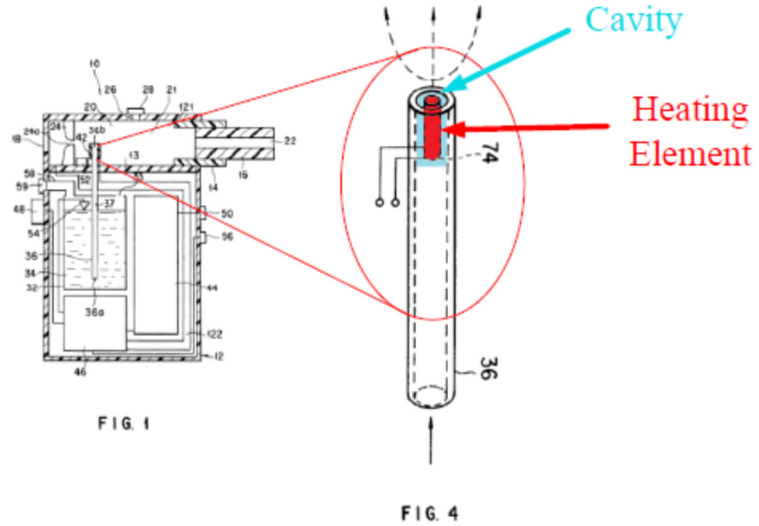 Ex. 1003, Takeuchi at Figs. 1 And 4 (Annotated) In addition to the cavity disclosed above, a second cavity exists within the atomizer. Specifically, the area within the upper chamber by the squeeze plate hole 24a and heater 42 also is where the particles first exit outlet port 36b and mix with outer air from the outer air introduction hole 26, and it is a part of Takeuchi's atomizer that includes components (*e.g.*, 42, 36b, 36) that convert liquid into aerosols. Accordingly, this hollow area within the upper chamber represents a second cavity within the atomizer of Takeuchi. **<u>Takeuchi:</u>** 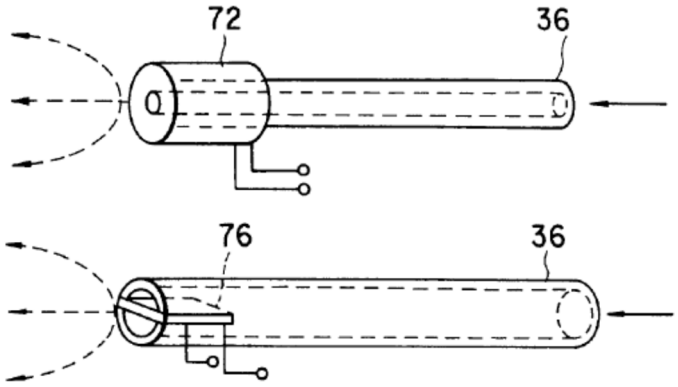

Claim 1.[k]	Takeuchi
	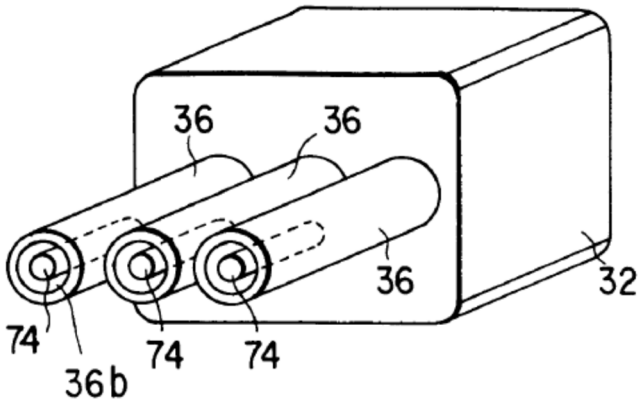 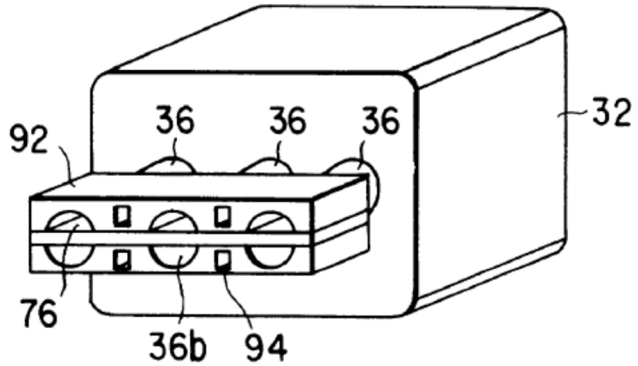 Ex. 1003 at Figs. 3, 5-7. "In this step, the liquid flavor source 34 is already transported to the outlet port 36a of the capillary tube 36 by the capillary force of the capillary tube 36 as shown in FIG. 2A. If the heater 42 is turned on under this condition, the liquid flavor source 34 within the outlet port 36a is instantly gasified by the heat generated from the heater 42 as shown in FIG. 2B so as to be supplied into the gas passageway 20. Upon gasification of the liquid flavor source 34 within the outlet port 36a by the heating with the heater 42, the liquid flavor source 34 is newly supplied from the liquid container 32 into the outlet port 36a of the capillary tube 36 by the capillary force of the capillary tube 36, as shown in FIG. 2C. In this fashion, supply and gasification of the liquid flavor source 34 are repeated within the outlet port 36a of the capillary tube 36." *Id.* at 7:57-8:5. "The free space between the outlet portion 36b of the capillary

Claim 1.[k]	Takeuchi
	tube 36 and the inhalation port 22 can act as a cooling chamber 21 which constitutes a part of the gas passageway. Corresponding to the cooling chamber 21, an outer air introduction hole 26 is formed through the ceiling of the upper chamber 121 to permit the outer air to be introduced into the cooling chamber 21. A gas containing a flavor, which is formed by the heating of the liquid flavor source with a heater 42, is mixed with the outer air within the cooling chamber 21 so as to be cooled and, then, flows to reach the inhalation port 22." *Id.* at 5:1-11.

68. Below is a claim chart explaining where and how the claim language "a liquid-supply within the housing" is disclosed.

Claim 1.[l]	Takeuchi
1.[l] a liquid-supply within the housing; and	Takeuchi discloses this feature. I understand that the Board previously construed the term "liquid-supply" to mean "the liquid itself." Ex. 1011 at p. 11. Takeuchi discloses a liquid-supply ("liquid flavor source 34") contained in liquid container 32 within the lower chamber 122 of the housing (casing 12, upper chamber 121, and lower chamber 122). Ex. 1003 at 5:28-46. I understand that PO proposed to construe the term "liquid-supply" to mean "a store for liquid" in a prior IPR concerning the 331 patent. Ex. 1011 at pp. 7-8. Takeuchi discloses "a liquid-supply within the housing" even under PO's proposed construction. Specifically, Takeuchi discloses a liquid container 32 within the lower portion of the housing (casing 12, lower chamber 122). The liquid container 32 contains liquid (liquid flavor source 34), and supplies it to the atomizer (capillary tube 36). Therefore, liquid container 32 with liquid 34 constitutes a store for liquid (*i.e.*, a liquid-supply under PO's proposed construction) in the housing.

Claim 1.[l]	Takeuchi
	<u>Takeuchi:</u> 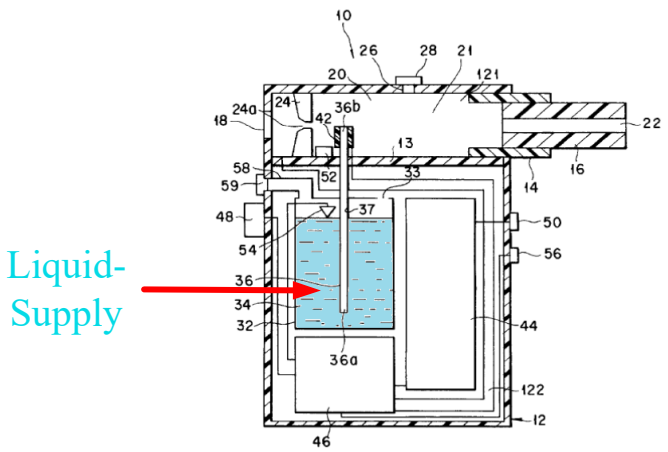 Ex. 1003 at Fig. 1 (annotated). "On the other hand, the liquid container 32 housing a liquid flavor source 34 is fixed within the lower chamber 122 of the casing 12. The liquid flavor source 34 is housed in the container 32 in an amount conforming with a plurality of puffs of a user. The liquid flavor source 34 contains at least a flavor substance. However, in order to add smoke to the flavor, it is possible for the liquid flavor source 34 to contain a substance forming aerosol when heated. As a substance for forming an aerosol, it is possible to use alcohols, sugars, water and a mixture of at least two of these materials. The alcohols used in the present invention include, for example, glycerin, propylene glycol, and a mixture thereof. To be more specific, it is possible for the liquid flavor source 34 to contain extracts from various natural products and/or components thereof depending on the use of the flavor-generating device. For example, where the device is used as a simulated smoking article, it is possible for the liquid flavor source 34 to contain tobacco components such as tobacco extracts and a tobacco smoke condensate." *Id.* at 5:28-46.

69. Below is a claim chart explaining where and how the claim language "an aerosol passage leading from the atomizer to the mouthpiece" is disclosed.

Claim 1.[m]	Takeuchi
1.[m] an aerosol passage leading from the atomizer to the mouthpiece; and	Takeuchi discloses this feature. As discussed in claim 1.[i] above, Takeuchi discloses an atomizer that includes at least a heater 42 and a liquid passageway constituted by a capillary tube 36 with outlet portion 36b, where the liquid is turned into aerosol. As discussed in claim 1.[j] above, Takeuchi discloses gas passageway 20 that runs through the upper chamber 121 to the user. Ex. 1003 at 4:33-35, 50-52. More specifically, as shown in annotated Fig. 1 below, Takeuchi discloses that an aerosol passage that runs from around the squeeze hole (24a) and heater (42) to the outlet (inhalation port 22) to the smoker via the mouthpiece (mouthpiece 16) within the upper chamber. Therefore, as shown below, Takeuchi discloses that an aerosol passage that runs from around the squeeze hole (24a) and heater (42) to the outlet (inhalation port 22) to the user via the mouthpiece 16 within the upper chamber 121. *Id.* at 4:50-52, 5:1-4, 4:63-67. **<u>Takeuchi:</u>** 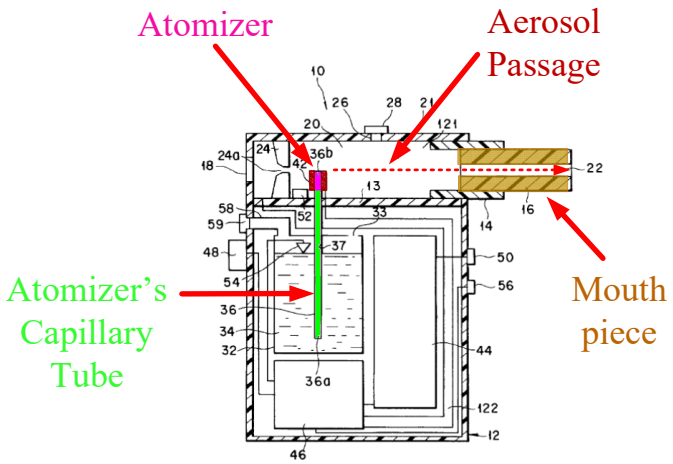 Ex. 1003 at Fig. 1 (annotated).

Claim 1.[m]	Takeuchi
	"As will be described herein later, the upper chamber 121 is used as a gas passageway 20 for forming a gaseous stream of a flavor which is to be inhaled by a user." *Id.* at 4:33-35. "The gas passageway 20 is defined within the upper chamber 121 of the casing 12, between the air intake port 18 and the inhalation port 22." *Id.* at 4:50-52. "The squeeze hole 24a of the squeeze plate 24 act to regulate or direct the air introduced from the intake port 18 selectively toward a outlet portion 36b of a capillary tube 36 described in detail below." *Id.* at 4:63-67. "The free space between the outlet portion 36b of the capillary tube 36 and the inhalation port 22 can act as a cooling chamber 21 which constitutes a part of the gas passageway." *Id.* at 5:1-4. *Also see* claim 1.[i,j] above.

70. Below is a claim chart explaining where and how the claim language "with the liquid-supply in physical contact with the atomizer" is disclosed.

Claim 1.[n]	Takeuchi
1.[n] with the liquid-supply in physical contact with the atomizer; and	Takeuchi discloses this feature. I understand that the Board previously construed the term "physical contact" to mean "direct contact." Ex. 1009 at pp. 8-9. As discussed in claim 1.[i] above, Takeuchi discloses an atomizer that includes at least a heater 42 and a liquid passageway constituted by a capillary tube 36 with outlet portion 36b. As discussed in claim 1.[l] above, Takeuchi discloses a liquid-supply (liquid flavor source 34). Takeuchi further discloses that the capillary tube 36, a part of the atomizer, is inserted within and thus in direct contact with the liquid-supply (liquid flavor source 34) as shown in annotated Fig. 1 below (both as it first projects

Claim 1.[n]	Takeuchi
	into the liquid supply and as it contacts the liquid). Ex. 1003 at 5:47-52 ("The capillary tube 36 for transporting the liquid flavor source by the capillary force is inserted within the liquid container."); Fig. 1. Also, the liquid is in direct contact with the capillary tube and the heater as it travels up the tube and into the outlet port 36b. For example, Figs. 2A and 2C (annotated below) show the liquid supply (liquid flavor source 34) in direct contact with both the heater 42 and the capillary tube 36. Ex. 1003 at 7:57-8:4. A PHOSITA thus would have understood that the liquid in the Fig. 4 embodiment will also be in direct contact with the capillary tube 36 and rod-like heater 74 as it moves up the tube by capillary action. Therefore, like the Board previously held, "Takeuchi teaches an atomizer in [physical] contact with a liquid supply by virtue of capillary tube 36 extending into and being in direct contact with liquid 34". *See*, Ex. 1011 at pp. 17-18. Takeuchi discloses this claim limitation even under PO's proposed construction for "liquid-supply" to mean "a store for liquid." *See*, Ex. 1011 at pp. 7-8. As discussed in claim 1.[l] above, liquid container 32 with liquid 34 is a liquid-supply under PO's proposed construction ("a store for liquid"). As shown in annotated Fig. 1 below, Takeuchi teaches that the capillary tube 36, a part of the atomizer, is inserted within and thus in direct contact with (*i.e.*, in physical contact with) the liquid container 32 (*i.e.*, liquid-supply under PO's proposed construction) at the area circled in red. *Compare* the contact between capillary tube 36 and liquid container 32 in the circled area *with* opening 33 (a hollow space indicating an opening, thus no contact). Also, annotated Figs. 6-7 clearly show that capillary tube 36 is in direct contact with liquid container 32 (yellow highlighting.) **<u>Takeuchi:</u>**

Claim 1.[n]	Takeuchi
	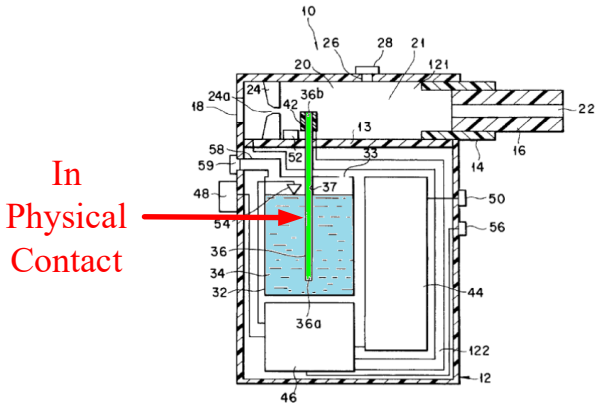 Ex. 1003 at Fig. 1 (annotated). 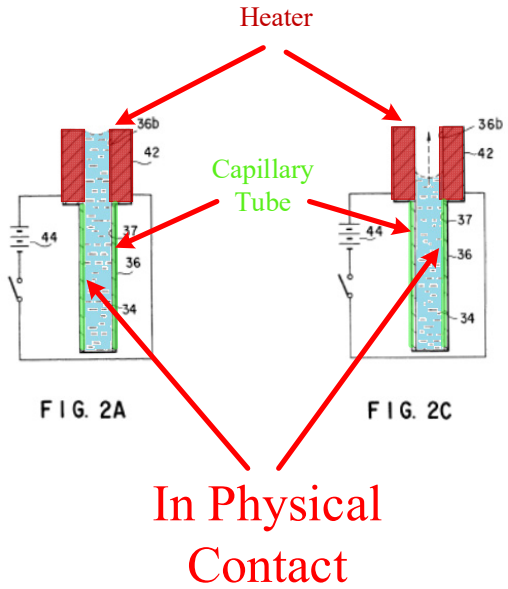 *Id.* at Figs. 2A and 2C (annotated).

Claim 1.[n]	Takeuchi
	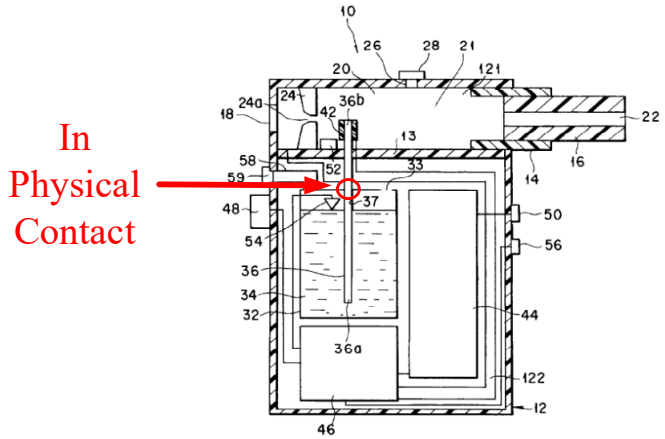 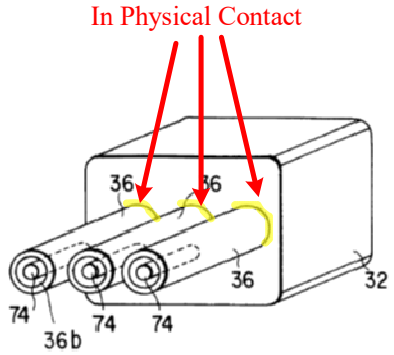 FIG. 6 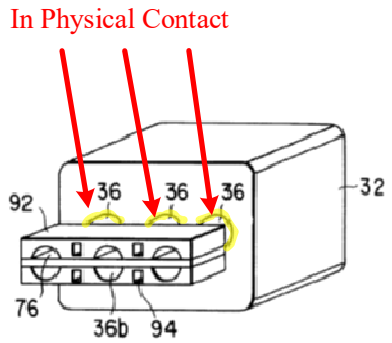 FIG. 7 *Id.* at Figs. 1, 6-7 (Annotated).

Claim 1.[n]	Takeuchi
	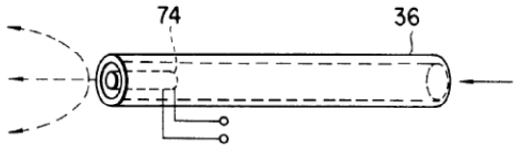 FIG. 4 *Id.* at Fig. 4. "The capillary tube 36 for transporting the liquid flavor source by the capillary force is inserted within the liquid container. The capillary tube 36 defines a liquid passageway 37 for the liquid flavor source, and its lower end 36a is positioned in the vicinity of the bottom of the liquid container 32." *Id.* at 5:47-52. *Also see* claim 1.[i,l] above.

71. Below is a claim chart explaining where and how the claim language "a heating element within the cavity" is disclosed.

Claim 1.[o]	Takeuchi
1.[o] a heating element within the cavity.	Takeuchi discloses "a heating element within the cavity." As discussed in claim 1.[k] above, Takeuchi discloses two different cavities in an atomizer: the interior of the tube 36 at outlet portion 36b; and the upper chamber by the squeeze plate hole 24a and heater 42. Both cavities have a heating element inside them. Specifically, Takeuchi discloses a heating element (heater 42) in many different embodiments. For example, Takeuchi teaches one embodiment as a "rod-like heater 74" serving as a heating element that is inserted into the cavity (outlet port 36b). Ex. 1003 at 8:22-23. The annotated Fig. 1 below depicts the use of the "rod-like heater 74," shown in Fig. 4, within capillary tube 36. Takeuchi therefore teaches

Claim 1.[o]	Takeuchi
	a heating element (heater 42/74) within the cavity (outlet portion 36b). 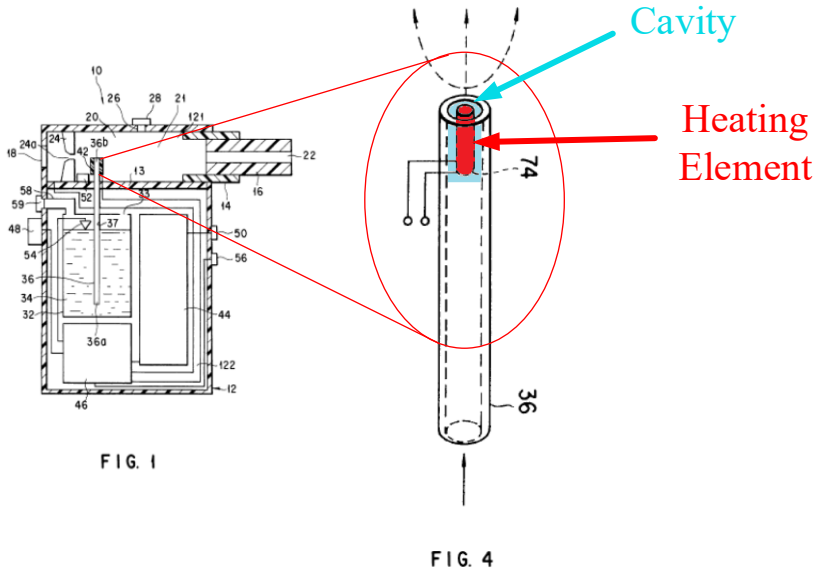 Ex. 1003, Takeuchi at Figs. 1 And 4 (Annotated) Similarly, Figs. 5 and 6 show a heating element located inside the outlet port of the capillary tube. Ex. 1003, 8:24-26, 33-36, Figs. 5-6. Alternatively, as discussed in claim 1.[k] above, Takeuchi discloses a second cavity within the upper chamber 121 which is part of the atomizer (the area around the squeeze plate hole 24a and heater 42). In the Fig. 15 embodiment, Takeuchi discloses that a heater 425 is provided on the protruded end of an intercommunicating pore structure 302, (*id.* at 10:59-63, Fig. 15), where the intercommunicating pore structure is within this second cavity of the atomizer. *Id.* at Figs. 1, 15, 5:47-52, 6:4-7. Similarly, in the Fig. 1 embodiment, the heater 42 is mounted on the end of the tube 36 in the second atomizer cavity. Takeuchi therefore teaches a heating element (heater 425 in Fig. 15 or heater 42 in Fig. 1) within the second cavity. **<u>Takeuchi:</u>**

Claim 1.[o]	Takeuchi
	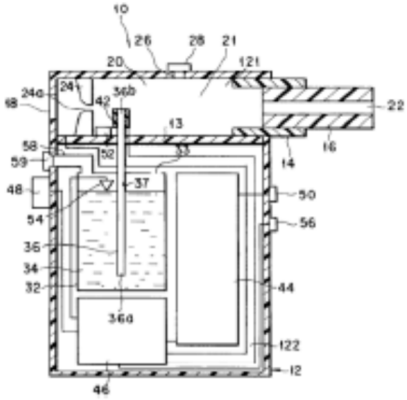 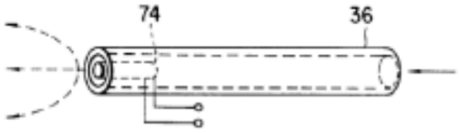 FIG. 4 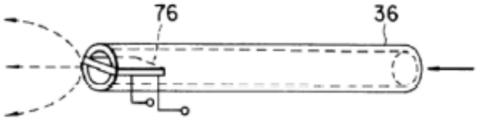 FIG. 5 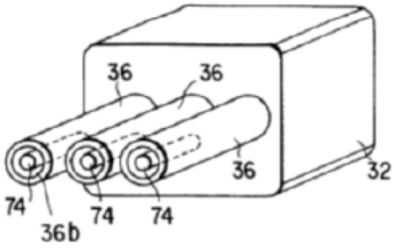 FIG. 6

Claim 1.[o]	Takeuchi
	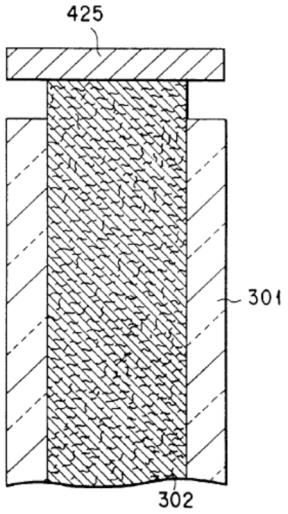 Ex. 1003 at Figs. 1, 4-6, 15. "In the modification shown in FIG. 4, a rod-like heater 74 is inserted into the outlet port 36a of the capillary tube 36. Further, in the modification shown in FIG. 5, a plate-like heater 76 is inserted into the outlet port 36a of the capillary tube 36." *Id.* at 8:22-26. "Further, as shown in FIG. 15, the intercommunicating pore structure 302 may protrude from the enclosure 301. In such a case, a heater 425 can be provided on the protruded end of the intercommunicating pore structure 302." *Id.* at 10:59-63. "The capillary tube 36 for transporting the liquid flavor source by the capillary force is inserted within the liquid container. The capillary tube 36 defines a liquid passageway 37 for the liquid flavor source, and its lower end 36a is positioned in the vicinity of the bottom of the liquid container 32." *Id.* at 5:47-52. "The upper end portion of the capillary tube 36 protrudes into the upper chamber 121 of the casing 12 somewhat downstream of the squeeze plate 24 and is equipped with the heater 42 serving to gasify the liquid flavor source 34. In the

Claim 1.[o]	Takeuchi
	embodiment shown in FIG. 1, the heater 42 consists of a tubular body mounted to the capillary tube 36 and having an inner diameter equal to that of the capillary tube 36. In other words, the outlet port 36a of the liquid passageway 36 is formed by the heater 42 itself." *Id.* at 6:4-12. *Also see* claim 1.[k] above.

72. Below is a claim chart explaining where and how the preamble language "An electronic cigarette, comprising" is disclosed.

Claim 2.[a]	Takeuchi
2.[a] An electronic cigarette, comprising:	I do not believe that the preamble is a claim limitation, but even if I assume it is for purposes of my evaluation, Takeuchi discloses an electronic cigarette. *See* claim 1.[a] above.

73. Below is a claim chart explaining where and how the claim language "a housing" is disclosed.

2.[b] a housing;	Takeuchi discloses this limitation. *See* claim 1.[b] above.

74. Below is a claim chart explaining where and how the claim language "a mouth piece on the housing" is disclosed.

Claim 2.[c]	Takeuchi
2.[c] a mouth piece on the housing;	Takeuchi discloses this limitation. *See* claim 1.[c] above.

Claim 2.[c]	Takeuchi

75. Below is a claim chart explaining where and how the claim language "an LED at a first end of the housing" is disclosed.

Claim 2.[d]	Takeuchi
2.[d] an LED at a first end of the housing;	Takeuchi discloses this limitation. *See* claim 1.[d] above.

76. Below is a claim chart explaining where and how the claim language "an air inlet for providing air into the housing" is disclosed.

Claim 2.[e]	Takeuchi
2.[e] an air inlet for providing air into the housing;	Takeuchi discloses an air inlet for providing air into the housing, namely, the inlet provides air into the upper chamber 121. *See* claim 1.[e] above.

77. Below is a claim chart explaining where and how the claim language "a battery and a sensor electrically connected to an electronic circuit board within the housing, with the sensor in a stream passage in the housing" is disclosed.

Claim 2.[f]	Takeuchi
2.[f] a battery and a sensor electrically connected to an electronic circuit	Takeuchi discloses a battery, a sensor, an electronic circuit board within the housing, and a stream passage within the housing. *See* claim 1.[f,g,h,j] above.

Claim 2.[f]	Takeuchi
board within the housing, with the sensor in a stream passage in the housing;	Takeuchi further discloses that the battery (power source 44) and the sensor (sensor 52) are electrically connected to the electronic circuit board ("control circuit 46"). Ex. 1003 at 7:51-56 ("As a result, an inhaling action signal is transferred from the sensor 52 to the control circuit 46. Then, under the control of the control circuit 46, an electric power is supplied from the power source 44 to the heater 42 so as to turn the heater 42 on."), Fig. 1. As illustrated in annotated Fig. 1 below, the sensor is located in the stream passage. *Id.* at 6:46-54 ("The sensor 52 for detecting the inhaling action of the user is arranged within the upper chamber 121 of the casing 12 …"), Fig. 1. 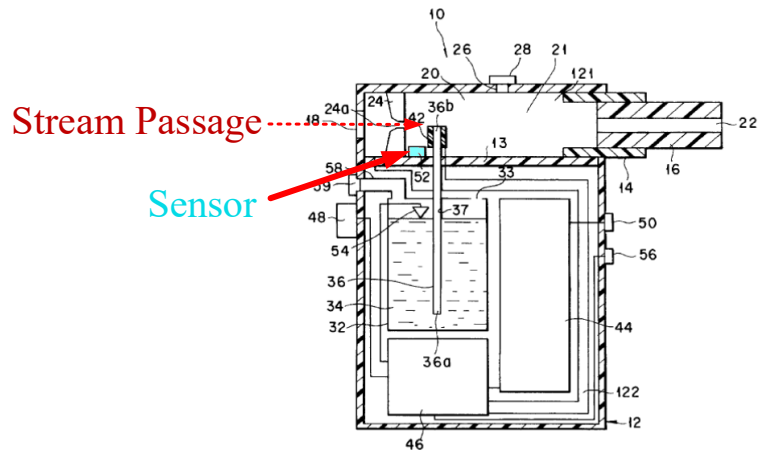 Ex. 1003, Fig. 1 (Annotated) **<u>Takeuchi:</u>** "As a result, an inhaling action signal is transferred from the sensor 52 to the control circuit 46. Then, under the control of the control circuit 46, an electric power is supplied from the power source 44 to the heater 42 so as to turn the heater 42 on." *Id*. at 7:51-56. "The sensor 52 for detecting the inhaling action of the user is arranged within the upper chamber 121 of the casing 12, and is positioned between the squeeze plate 24 and the heater 42. It is possible to use as the sensor 52 a general pressure sensor for detecting a change in the pressure within the chamber 121

Claim 2.[f]	Takeuchi
	as a change in electrical resistance, as a change in electrical capacitance or as a piezoelectric electromotive force, or a rocking vane type sensor for detecting a gas stream within the chamber 121." *Id.* at 6:46-54. *Also see* claim 1.[f,g,h,j] above.

78. Below is a claim chart explaining where and how the claim language "an atomizer within the housing, with the atomizer having a heating element within a cavity, and with the atomizer making contact with a liquid-supply, to provide for movement of liquid to the atomizer via capillary action" is disclosed.

Claim 2.[g]	Takeuchi
2.[g] an atomizer within the housing, with the atomizer having a heating element within a cavity, and with the atomizer making contact with a liquid-supply, to provide for movement of liquid to the atomizer via capillary action;	Takeuchi discloses an atomizer within the housing, with the atomizer having a heating element (heater 42 or rod-like heater 74) within a cavity, and with the atomizer making contact with a liquid-supply. *See* claim 1.[l.i.n.o] above. Takeuchi further teaches that liquid (liquid flavor source 34) is transported by the atomizer's capillary tube (capillary tube 36), which is inserted into the liquid container. The transportation of the liquid through the atomizer's capillary tube 36 is accomplished via capillary action (*i.e.*, capillary force). Ex. 1003 at 5:47-52, 2:17-25. Takeuchi therefore teaches that an atomizer (including at least capillary tube 36, outlet portion 36b, heater 42 or rod-like heater 74) within the housing (casing 12, upper chamber 121, and lower chamber 122), with the atomizer having a heating element (heater 42 or rod-like heater 74) within a cavity (outer portion 36b or larger cavity within upper chamber 121), and with the atomizer making contact with a liquid-supply (liquid

Claim 2.[g]	Takeuchi
	flavor source 44), to provide for movement of liquid to the atomizer via capillary action. Also, as explained in Claim 1.[n] above, even if the liquid supply is the store for liquid (it is not), the capillary tube 36 of the atomizer is in physical contact with the liquid container 32. **<u>Takeuchi:</u>** "The capillary tube 36 for transporting the liquid flavor source by the capillary force is inserted within the liquid container. The capillary tube 36 defines a liquid passageway 37 for the liquid flavor source, and its lower end 36a is positioned in the vicinity of the bottom of the liquid container 32." Ex. 1003 at 5:47-52. "In the flavor-generating device of the present invention, a liquid containing a flavor substance, i.e., a liquid flavor source, is transported from within a liquid container through the liquid passageway by a capillary force exerted by the liquid passageway. Thus, if the preceding liquid flavor source is gasified or evaporated at the outlet end portion of the liquid passageway, the succeeding liquid flavor source is supplied to the outlet end portion of the liquid passageway by the capillary force." *Id.* at 2:17-25. *Also see* claim 1.[l,i,n,o] above.

79. Below is a claim chart explaining where and how the claim language "an aerosol passage extending from the atomizer to the mouthpiece" is disclosed.

Claim 2.[g]	Takeuchi
2.[h] an aerosol passage extending from	Takeuchi discloses an aerosol passage extending from the atomizer to the mouthpiece. *See* claim 1.[m] above.

Claim 2.[g]	Takeuchi
the atomizer to the mouthpiece.	

VIII. GROUND 2: CLAIMS 1-2 OF THE 331 PATENT ARE OBVIOUS OVER TAKEUCHI

80. As discussed *supra* in ¶¶56-79, Takeuchi teaches each limitation recited in independent claims 1 and 2, and therefore anticipates these claims. As I explained *supra* in ¶¶52-55, a PHOSITA would have understood that Takeuchi's control circuit 46 is an electronic circuit board. To the extent that the limitation "an electronic circuit board within the housing" recited in claims 1 and 2 is not expressly disclosed, it is obvious in view of Takeuchi and the then existing general state of the art. Takeuchi discloses a heater 42 and power source 44 that is driven under the control of a control circuit 46 fixed within lower chamber 122. Ex. 1003 at 6:23-29. As discussed *supra* in ¶¶44-45, a PHOSITA would have recognized that the control circuit necessarily includes a circuit board. A skilled person would have understood that control circuits, whether digital or analog, and including commonplace components of electronic circuits, such as sensors, LEDs, microchips, microprocessors, Read Only Memory (ROM), Read and Write Memory (RAM), clocks, power supply and the like, or a combination of any of the above, are very commonly implemented on an electronic circuit board for miniaturized applications, such as the hand-held device in Brooks, since the

1960's, and thus necessarily, and inherently, include electronic circuit boards. *See, e.g.*, Ex. 1016, Ghosh (a method of attaching a microchip to a circuit board patent); Ex. 1031, Wood (an inhaler device patent); Ex. 1018, Bremenour (a memory cartridge for a circuit board patent). In the alternative, these components are widely available and an ordinarily skilled person would have found it obvious to combine and use them in any way necessary. At the very least, a PHOSITA would have recognized that it would have been obvious to include a circuit board for the control circuit of Takeuchi. A control circuit that is not on a circuit board would be difficult in the small confines of the electronic cigarette and might require its own sub-chamber for the circuit. Therefore, to the extent that control circuit 46 is not deemed to be an electronic circuit board, it would have been obvious to place the control circuit 46 on a circuit board to achieve the predictable result of supporting and electrically connecting components of the control circuit 46 that provide signal processing and control.

81. I am not aware of any secondary considerations that would affect my opinion.

82. Therefore, it is my opinion that claims 1-2 are unpatentable as anticipated by, or at least rendered obvious by, Takeuchi.

IX. CONCLUSION

83. For the reasons set forth above, it is my opinion that claims 1-2 of the 331 patent are unpatentable.

84. I declare under penalty of perjury under the laws of the United States that the foregoing is true and correct.

Dated: March 1, 2018

Dr. Robert H. Sturges

Exhibit A

CURRICULUM VITAE

Robert H. Sturges, Jr.

GENERAL:

Education:
S.B.-S.M. Mechanical Engineering (combined degree), M. I. T., June, 1969
Ph.D. Mechanical Engineering, Carnegie Mellon University, December, 1986

Positions Held:

1969-1974	Staff Engineer, Charles Stark Draper Laboratories, Cambridge, MA 01239 Mechanical/electrical system design and analysis for the Apollo project; teleoperator controls research.
1974-1977	Lead Engineer, Westinghouse Electric, R&D Center (R&D), Churchill, PA 15238 Kinematic/mechanical/electrical system design and analysis for product and process applications.
1977-1984	Senior Engineer, Westinghouse R&D Robotics/teleoperator system design for nuclear fuels and reactor maintenance; flexible manufacturing system development for sheet metal and wire harness applications.
1984-1985	Residency year; research in dexterity.
1985-1986	Principal Engineer, Westinghouse Productivity and Quality Center (PQC), Oakdale, PA 15230 Development of design for assembly methods; teaching design for producibility and statistical process control.
1986-1987	Fellow Engineer, Westinghouse PQC Teaching design for producibility and statistical process control methods, Value Engineering facilitator.
1987-1992	Assistant Professor, Carnegie Mellon University, Department of Mechanical Engineering
1992-1997	Associate Professor, Carnegie Mellon University, Department of Mechanical Engineering
1997-2001	Associate Professor, Virginia Tech, Departments of Mechanical Engineering and Industrial & Systems Engineering
2001-2017	Professor, Virginia Tech, Departments of Mechanical Engineering and Industrial & Systems Engineering, Director of Robotics and Automation Laboratory

CONSULTING EXPERIENCE: (from 5 years to present)

Canon, K.K.: Intellectual property, device analysis
Subject: Patent infringement issue involving driving hardware for toner cartridges, analysis of accused devices, validity analysis, ITC and IPR declarations.

PHPK, Inc: Intellectual property, device analysis
Analysis of drawing sets for cryogenic valves and fittings, determination of extent of copying of proprietary material.

Simmons Co.: Intellectual property, device analysis
Subject: Patent infringement issue involving automatic manufacture of bed frames, analysis of accused devices, validity analysis, software analysis.

National Standard, Inc.: Intellectual property, device analysis
Subject: Patent infringement issue involving automatic manufacture of weld wire, analysis of accused devices, validity analysis.

Legget & Platt, LLC.: Intellectual property, device analysis
Subject: Patent infringement issue involving automatic manufacture of wire frames for box springs, analysis of accused devices, validity analysis.

ROY-G-BIV Corp.: Intellectual property, software
Subject: Patent infringement issue involving motion control software, validity analysis.

Daifuku, Ltd.: Intellectual property, device analysis
Subject: Patent infringement issue involving automated material handling systems, analysis of accused devices, validity analysis, IPR rulings.

iLife Technologies: Intellectual property, device analysis
Subject: Patent infringement issue involving wearable sensor systems, analysis of accused devices, validity analysis.

La-Z-Boy, Inc.: Intellectual property, device analysis
Subject: Trade secret issue involving motion furniture mechanisms, analysis of accused devices.

RJ Reynolds, Inc.: Intellectual property, device analysis
Subject: Patent infringement issue involving electronic cigarettes.

Diebold, Inc.: Intellectual property, device analysis
Subject: Automated teller machines, analysis of devices, expert report, court testimony.

SRAM: Intellectual property, device analysis
Subject: Patent infringement issue involving bicycle components, IPR declarations.

TEACHING AND EDUCATION

A. *Undergraduate Student Projects:*

M. Burke, "Foot-Operated Mouse" 1988
J. Kalvan, "Balancing Machine" 1988
J. Kalvan, "Weaving Machine" 1989
R. Saulnier, “Quincunx” 1990
M. Pogozelski, “Probability Machine” 1990
P. Downey, “Review of Design for Assembly Methods,” 1990
C. Wivell, “3-D Displays of Functions” 1991
A.-C. Kopp, “Generalized 3-D Displays” 1991
M. Darcy, “Modular Quincunx” 1991
C. Tesluk, “Hydrofoil Stabilizer for Sailboats” 1991
A. R. Abid, “Ball Mill Stabilizer,” 1991 SURG awardee.
K. Pogany, “CAD/CAM System” 1992
S. Radney, “VuMan Shell” 1993
S. Crouse, “Prototype Flexible Wiring” 1993
J. Steven, “FMS Programming System” 1993
D. Fontaine, “Conceptual Design System” 1993
C. Tesluk, “Variable Attack Wind Turbine,”1993 SURG awardee.
J. R. Kasperik, “Adjustable Sheetmetal Gripper” 1993
M. T. Angus, “Bending Press Flexibility Modelling” 1993
M. Sigrist, “Design of a Table Top NC Mill” 1993
A. Rose, “Ultra-light Weight Steering System” 1994
W. Ouyang, “APT Translator for NC Mill” 1994
P. Klabnik, “Drives and Control for NC Mill” 1994
K. F. Moser, “Surgical Teleoperator Hand Control” 1994
T. Bruce, “An Adjustable Gripper for Sheet Metal Handling” 1994
R. Fenza, “Analaysis and Simulation of a Robotic Gripper” 1995
S. Radney, “Convertible Child Seat” 1995
R. Sullivan, “Laser-Based DME for Medical Imaging” 1995
T. Okimoto, “Magnetic Structure for Haptic Interface” 1996
E. Augustin, "Fuel Injection for Formula Racing Engine" 1997
M. Abali, "Braking System Design for Formula Racecar" 1998
D. C. Reubush, "Optimization of Tires for Formula Racecar" 1999
J. Ballenger, "CAD Modeling of Formula Racecar" 2000
J. R. Batman, “Directional Drilling” 2003

B. *MS Projects Completed:*

P. Rao, "Engineered Compliances for Non-symmetric Insertion Tasks," Spring 1990
J.-T. Yang, “Orientation Feature Analysis for Assembly,” Fall 1991
N. Pektas, “Stabilization of Nonlinear Computation Circuits” Fall 1992
Omid Rezania, “Assembly Process Synthesis,” May 94.
Dongwon Lee “Design for Disassembly,” May 94.
M. DeGuire “Operational Software for Control of Student CNC Milling Machine” Jan 1995
Chris Reider “Robotic Wire Termination,” May 1996

H. Bauer, "Massively Parallel Micro Assembly" 1999

C. *ME Theses Completed: (please note that at CMU, the terms ME and MS are reversed. Thus, the following works through 1996 are the equivalent of an MS Thesis at VT.)*

W. Wang, "Understanding Machinese," 1989
S. Laowatanna, "Physics of Endoscopes," 1990
E. Y. Hershkowitz, "Analog Matrix Inversion," 1991
K. O'Shaughnessy, "Functional Decomposition in Design," 1991
J. H.-W. Wong, "Design for Assembly of Large Components," 1991
M. I. Kilani, "Design for Assembly Reasoning System," 1991
C.-H. Wang, "2D and 3D Models of Bending Processes," 1992
R. G. Reed, "Performance-Intelligent Design Advisors" 1993
D. O. Hunt, "Application of Design for Assembly Theory to Assembly Workstation Design" 1993
C.-S. Chien "Optimization of Bending Processes" 1994
Gita Krishnaswamy "Control for Planetary Rover," 1994
André Butler "Design for Disassembly," 1995
Hong Dao "Reasoning with Functions in Design," 1995
(Winner of the "Bennet Prize" for best ME Project)
Anne-Claire Kopp "Design of Passive Assembly Devices," 1996

MS Theses Completed:

B. Wells, "Control of Multi-unit Tracked Vehicles" 6/99
J. Marehalli, "Optimization of Handling & Gripper Design" 9/99
A. Kanarat, "Modeling & Simulation of Multi-unit Tracked Vehicles" 9/99
V. Aishwarya, "A Software Based Hierarchical Real Time Control System for Rapid Development of Mobile Robot Prototypes", 4/00
S. Wiedmann, "Kinematic Analysis Of Threaded Fastener Assembly In 3 Dimensions", 2/00
Y. Wongwanich, "Fitt's Law Model for Large and Heavy Plates", 9/01
M. Abbott, "Compliance Model for a 6-Dof Robot", 4/02
S. Moutran, "Workspace Analysis for Fiber Placement", 5/02

D. *Ph.D. Theses Completed:*

S. Laowatanna, "Physics of Rapid Assembly" 6/94
K. Elkins, "Precision Sheet Metal Processes" 8/94
G. Roston, "Genetic Design Methodology for Configuration" 12/94
K. Sathirakul, "Geometric Modeling of Assembly" 9/97
V. Ayyadevara, "Algorithmic Planning of the Part Stacking Process" 12/99
A. Kanarat, "Control of Multi-unit Tracked Vehicles" 5/04
M. Lee, "Non-Autoclave Processing of Composites" 5/04
R. Anderson, "A New Approach to Materiel Movement Modeling" 4/06
J. Choi, "Workspace Modeling for Fiber Placement" 4/06
G. Chaudhari, "Optimization of Factory Processes"

In Progress:

R. Jientrakul, "Vision-based Factory Automation"
R. Rich, “Optimization of a Truck-drone in Tandem Delivery Network”

E. *Course Development:*

Fall 1988: Developed 7 weeks of new material and introduced 10 “Take Home” Lab Problems for “Manufacturing Sciences” 24-208.

Spring 1990: Introduced "Design for Manufacture" 24-268

Fall 1991: Co-developed “Fundamentals of Mechanical Engineering” 24-101, with Prof. C. Amon Featured in *Mechanical Engineering,* Aug, 92

Fall 1992: Started the “24-101 Live Steam Challenge” a distance competition for Freshman with student-designed pint-sized steam powered vehicles.

Fall 1997: Developed 6 weeks of new material and introduced 8 “Take Home” Lab Problems for “Manufacturing Processes” ISE-2204.

Summer 1998: Revised ISE-2204 for "Green Engineering Processes" emphasis, converted course material to web-based format.

Summer 2000: Introduced "Design and Manufacturing Integration" ME/I&SE 5984

Spring 2002: In ME 4524 and ECE 4704: Developed new course pack covering robotics theory and mathematical principles. Developed set of 6 new application lab projects using an industrial robot to build/assemble a working mobile robot.

Fall 2002: In ISE2204: Developed new approach to interactive learning in which all student work is presented orally in lieu of paper-based grading. Indeed, there are no grades at all during the semester, just “competent’ or “quality” evaluations, and each student must complete each assignment before proceeding to the next one. The result was gratifying: all students who passed are competent in this subject, and many achieved a depth of understanding that indicates a quality learning experience.

Fall 2004 In ISE4264 Selected a new up-to-date textbook, authored ten new hands-on assignments, carried out major upgrade to the equipment in the DH197 lab for this purpose.

RESEARCH-BASED PUBLICATIONS

A. *Books:* Sturges, Robert H., Jr., 2015, Practical Field Robotics, John Wiley, 1st edition, ISBN 978-1-118-94114-0.

B. *Critically Reviewed Papers:*

Published & Accepted Journal Papers:

j1. Sturges, R.H. 1988. "Analog Matrix Inversion," *IEEE Journal of Robotics and Automation,* Vol 4, No. 2. pp 157-162.

j2. Sturges, R.H. 1988. "A Three Dimensional Assembly Task Quantification with Application to Machine Dexterity," *International Journal of Robotics Research,* Vol 7, No. 4. pp 34-78.

j3. Sturges, R.H., and Wright, P.K., 1989 "A Quantification of Dexterity," *Journal of Robotics and Computer Integrated Manufacturing,* Vol. 6, No. 1, pp 3-14.

j4. Sturges, R.H., 1989. "A Quantification of Manual Dexterity: the Design for Assembly Calculator," *Journal of Robotics and Computer Integrated Manufacturing,* Vol. 6 No. 3, pp 237-252.

j5. Sturges, R.H., 1989. "Toward a Rational Workholding Methodology" *Journal of Robotics and Computer Integrated Manufacturing.* Vol. 9, No. 3.

j6. Sturges, R.H., and Wang, W., 1990. "Application and Experimental Results of Geometric Models of Face Milling" ASME *Manufacturing Review.* Vol 3, No. 2, pp 115-122.

j7. Sturges, R.H., 1990. "A Quantification of Machine Dexterity Applied to an Assembly Task," *International Journal of Robotics Research,* Vol 9. No. 3, pp 49-62.

j8. Wong, J. H.-W., and Sturges, R.H., 1992. "Design for Assembly Factors for Large and Heavy Parts" *ASME Journal of Mechanical Design,* Vol. 116. No. 2, pp 508-510.

j9. Sturges, R.H., 1992. "Monitoring Milling Processes through AE and Tool/Part Geometry," ASME *Journal of Engineering for Industry.* Vol. 114, No. 1, pp 8-14.

j10. Sturges, R.H., and Kilani, M., 1992. "Towards an Integrated Design for Assembly Evaluation and Reasoning System" *Journal of Computer Aided Design.* Vol 24, No. 2, February, pp 67-79.

j11. Kilani, M. I., and Sturges, R.H., 1992. "Detection and Evaluation of Orientation Features for CAD Part Models" *Journal of Engineering Design.* Vol 2, No. 3, Jan 1992.

j12. Sturges, R.H., and Laowattana, S., 1993. "A Flexible Tendon-Controlled Device for Endoscopy," *International Journal of Robotics Research.* Vol. 12 No. 2, pp 121-131, April 1993

j13. Sturges, R.H., O'Shaughnessy, K., & Reed R. G., 1993. "A Systematic Approach to Conceptual Design Based on Function Logic" *Int'l Journ. of Concurrent Engineering: Research & Applications (CERA),* Vol. 1, No. 2, June 1993, pp 93-106.

j14. Sturges, R.H., 1994. "A Review of Teleoperator Safety," *Int'l Journ. of Robotics and Automation,* Vol. 9, No. 4, Nov, 1994, pp 175-187.

j15. Reed, R.G., & Sturges, R.H., 1994. "A Model for Performance-Intelligent Design Advisors," *Int'l Journ. of Concurrent Engineering: Research & Applications (CERA),* Vol. 2, No. 3, Sept. 1994.

j16. Sturges, R.H., 1995. "Design of a Vernier Punch and Die Set for Single-Minute Bending Set-Ups," *Journal of Mechanical Design.* Vol 117, No. 3, pp 396-401.

j17. Sturges, R.H., and Laowattana, S., 1995. "Virtual Wedging in Three Dimensions," *Journal of Mechanical Design.* Vol 118, No. 1, pp 99-105.

j18. Sturges, R.H., & Laowattana, S., 1995."Design of an Orthogonal Compliance for Polygonal Peg Insertion," *Journal of Mechanical Design.* Vol 118, No. 1, pp 106-114.

j19. Sturges, R.H., Kilani, M., and O'Shaughnessy, K., 1995. "A Computational Model of Conceptual Design Based on Extended Function Logic" *AI EDAM.* Vol. 10, pp. 255-274.

j20. Elkins, K. & Sturges, R.H., 1996. "In-Process Angle Measurement and Control for Sheet Metal Manufacture," *Journ. of Intelligent Manufacturing.* Vol. 7, No. 3, pp 177-187.

j21. Roston, G. & Sturges, R.H., 1996. "Genetic Algorithm Synthesis of Four-bar Mechanisms," *AI EDAM,* Vol. 10, pp. 371-390.

j22. Sturges, R.H. & Hunt, D.O., 1996."Acquisition Time Reduction through New Design for Assembly Heuristics," *Journ. of Engineering Design.* Vol. 7 No. 2, Spring, 1996, pp 195-208.

j23. Roston, G. & Sturges, R.H., 1996. "Using the Genetic Design Methodology for Structure Configuration," *Microcomputers in Civil Engineering.* Vol. 11 , No. 3, pp. 175-184.

j24. Sturges, R.H., Laowattana, S., & Sathirakul, K, 1996. "Directly Visualizing Spatial Freedom from Solid Models," *International Journal of Robotics Research.* Vol 15, No. 5, pp. 505-521.

j25. Wang, C-H., & Sturges, R.H., 1996. "Preliminary Process Planning with Concurrent Multiple Representations of Parts," *Journ. of Intelligent Manufacturing.* Vol 7, pp 133-144.

j26. Sturges, R.H., & Sathirakul, K., 1998. "Jamming Conditions for Multiple Peg and Hole Assemblies," *Robotica,* Vol. 16 pp. 329-345.

j27. Elkins, K. & Sturges, R.H., 1999 "Non-Iterative Control of Small Radius Bend Angle." *SME Journal of Manufacturing Processes.* Vol 1, No 1, pp. 18-30, May 1999.

j28. Elkins, K. & Sturges, R.H., 1999 “Springback Analysis and Control in Small Radius Air Bending,” ASME *Journal of Manufacturing Science and Engineering.* Vol. 121, No. 4, pp. 679-688.

j29. Sturges, R.H., & Laowattana, S., “Constraint Network Analysis of Three Dimensional Insertion Tasks,” *Journal of Intelligent Manufacturing.* Volume 13, No. 1, February 2002, pp 19 – 38

j30. Elkins, K. & Sturges, R.H., “Design of a Sensor for On-Line Measurement of Loaded Bend Angle for Pressbrake Control,” *Journal of Flexible Automation and Intelligent Manufacturing.* December 2000.

j31. Ayyadevara, V. R., Bourne, D.A., Shimada, K., and Sturges, R.H., "Interference-free Polyhedral Configurations for Stacking" IEEE Transactions on Robotics and Automation, Vol.18, No.2, Apr 2002, pp 147-165

j32. Babiceanu, R. F., F. Frank Chen, Robert H. Sturges, “A Framework for Control of Automated Material Handling Systems using the Holonic Manufacturing Approach,”. accepted by the *International Journal of Production Research* (IJPR). Scheduled for publication: August 2004

j33. Sturges, R.H., 1999 "Myth and Value in Conceptual Design" accepted by *Journal of Flexible Automation and Intelligent Manufacturing.*. Publication date uncertain due to merger of the Journal.

j34. Sturges, R.H., & Sathirakul, K., “Multiple Peg Assembly Analysis through a Partitioning of the Jamming Space,” accepted *Journal of Applied Mechanisms and Robotics.* April, 2000.

j35. Sturges, R.H., & Sathirakul, K., "Solving Off-Axis Peg-In-Hole Insertion Problems With An RRR Compliant Mechanism" accepted *Journal of Applied Mechanisms and Robotics.* April, 2000.

j36. Kanarat, A. and Sturges, R. H., “Motion planning for nonholonomic mobile robots under control uncertainty,” *Computer-Aided Design and Applications,* Vol. 1 Nos. 1-4, 2004, CAD ’04, pp tbd

j37. Anderson, R. and Sturges, R. H., “The Use of Behavior in the Design of Complex Systems” *Computer-Aided Design and Applications,* Vol. 1 Nos. 1-4, 2004, CAD ’04, pp tbd

j38. R. F. Babiceanu, F. F. Chen and R. H. Sturges, "Real-Time Holonic Scheduling of Material Handling Operations in a Dynamic Manufacturing Environment," Robotics and Computer Integrated Manufacturing, 2004, (accepted 8/2004).

j39. R. F. Babiceanu, F. F. Chen and R. H. Sturges, "A Framework for Control of Automated Material Handling Systems Using the Holonic Manufacturing Approach," International Journal of Production Research, Vol. 42, No. 17, 2004.

j40. R. F. Babiceanu, F. F. Chen, and R. H. Sturges (2005) "The influence of material handling operations on the schedule makespan in manufacturing cell environments" *Transactions of NAMRI/SME*, Volume 33.

j41. Wiedmann, S., & Sturges, R.H., "A Full Kinematic Model of Thread-Starting for Assembly Automation Analysis", ASME Journal of Mechanical Design.Vol. 128:No. 1 pp 116-127

j42. Wiedmann, S., & Sturges, R.H., "Spatial Kinematic Analysis of Threaded Fastener Assembly", ASME Journal of Mechanical Design.Vol. 128:No. 1 pp 128-136

j43. Musa, R, Sturges, R.H., & Chen F.F. (2006) "Process Capability Allocation in the Extended Enterprise Environment" *Transactions of the NAMRI/SME*, Volume 34, pp tbd.

j44. Fong, N., & Sturges R.H., "A Control Design Strategy of a Reconfiguration Manufacturing System" accepted with revisions, *International Journal of Manufacturing Technology and Management* (IJMTM).

j45. Fong, N.H., Sturges, R.H & Shewchuk, J. "Dynamic Modeling of Multi-Stage Feedback Control Manufacturing Systems" *International Journal of Manufacturing Research (IJMR)* - special issue on "Innovation in Manufacturing", Vol.2, No.3, 2007.

j46. Fong, N.H., & Sturges, R.H., "Complex Plane Design Strategy for a Responsive Lean Manufacturing System", *International Journal of Computer Applications in Technology* (IJCAT) Vol 34 No. 3, 2009.

j47. Chaudhari, Gaurav S., Sturges, Robert H., Sandu, Corina, "Impact of combined feedback-feedforward control based ordering policies on supply chain stability and responsiveness", accepted by *Systems Research and Behavioral Science*, 2011, pp-tbd.

j48. Daniel W. Steeneck , Timothy C. Krometis, Robert H. Sturges, "A Procedure for Using Ship Tow-tank Data to Simulate Ship Motion and Inclusion of Perturbations", *Computing Science and Technology International Journal* (*CSTIJ*), Vol. 2, No. 4 (September, 2012) ISSN 2162-0660 (print) ISSN 2162-0667 (on-line).

j49. David B. Bateman, Igor A. Zamlinsky, and Robert H. Sturges, "Controller and Platform Design for a Three Degree of Freedom Ship Motion Simulator", *Computing Science and Technology International Journal* (*CSTIJ*), Vol. 2, No. 3 (September, 2012) ISSN 2162-0660 (print) ISSN 2162-0667 (on-line).

j50. Sturges, R.H., " Real-World Automation Control through the USB Interface". *Int'l Journ. of Engineering Inventions*, ISSN: 2278-7461, Vol. 2, No. 6, pp 48-56, April 2013.

j51. Anderson, R.J., & Sturges, R.H., "System Behaviors and Measures: Logical and State Complexity in Naval Weapons Elevators". *Complex Systems*, Vol 22, No. 3. pp 247-309

j52. Anderson, R.J., & Sturges, R.H., "System Behaviors and Measures: Compressed State Complexity and Number of Unique States Used in a Naval Weapons Elevators". *Complex Systems*, Vol 23, No. 1. pp 27-54, 2014

j53. Anderson, R.J., & Sturges, R.H., "Static Measures of Complexity in Naval Weapons Elevator System, Alternative Logic, and Mobile Carriage Systems". *Complex Systems*, Vol 23, No. 2. pp 149-176, 2014

j54. Sturges, R.H., "Material Removal by Arc Ablation". *Int'l Journ. of Engineering Science and Invention*, ISSN: 2319-6734, Vol. 3, No. 6, pp 1-6, June 2014.

j55. Sturges, R.H., "Simple and Inexpensive Hobbing for the General Shop". *Int'l Journ. of Engineering Inventions*, ISSN: 2278-7461, e-ISSN: 2278-7461, p-ISSN: 2319-6491, Volume 4, Issue 8 [January 2015] pp: 14-22.

j56. Ferrandez, S.M., Harbison, T., Weber, T., Sturges, R.H., Rich, R.K., "Optimization of a Truck-drone in Tandem Delivery Network Using K-means and Genetic Algorithm", *Journal of Industrial Engineering and Management*, JIEM, 2016 – 9(2): 73-89 – Online ISSN: 2013-0953 – Print ISSN: 2013-8423

j57. Chaudhari, Gaurav S., Sturges, Robert H., Sandu, Corina, "On the Underlying Structure of System Dynamics Models", submitted for review for the Journal by *Systems Research and Behavioral Science*..**28**(4):340-352 (13 pages) 01 Jul 2011

Journal Papers In Review:

j58. Lee, M, & Sturges, R.H., "Heat Transfer Modeling of Composite Fiber Tow in Fiber Placement", submitted for review for the Journal of Composites Part A.

j59. Lee, M, & Sturges, R.H., "Consolidation Modeling of Composite Fiber Tow in Fiber Placement", submitted for review to the Journal of Composites Part A.

j60. Kanarat, A. & Sturges, R. H., "Modeling and Simulation of a Multi-Unit Tracked Vehicle" , submitted for review to the Journal of Robotic Systems.

j61. Fong, N.H., Sturges, R.H. & Shewchuk, J. "DFSS of Production Control via Linear Control Methods" (UIIE-0293) submitted for review to IIE Transactions.

Peer- Reviewed Conference Papers:

c1. Sturges, R.H., 1989. "Task/Effector System Models of Dexterity for Machine Assembly," *IEEE Conf. on Intelligent Control*, Albany, NY, Sept, 1989.

c2. Sturges, R.H., and Kilani, M.I., 1990. "A Function Logic and Allocation Design Environment," *Proc. Industrial Process Control Conf. '90,* Detroit, MI, April, 1990.

c3. Sturges, R.H., Bourne, D.A., and Wang, W., 1990. "Real Time Interpretation of Acoustic Emissions in Milling," *Proc. Industrial Process Control Conf. '90,* Detroit, MI, April, 1990.

c4. Sturges, R.H., 1990. "A Rationale for Workholding Design," *Proc. Industrial Process Control Conf. '90,* Detroit, MI, April, 1990.

c5. Sturges, R.H., 1990. "Toward a Rational Workholding Methodology," *IEEE Int'l Conf. on Robotics and Automation*, Cincinnati, OH, May, 1990.

c6. Sturges, R.H., and Laowattana, S., 1991. "A Flexible Tendon-Controlled Device for Endoscopy," *IEEE Int'l Conf. on Robotics and Automation,* Sacramento, CA, April, 1991.

c7. Wong, J. H.-W., and Sturges, R.H., 1992. "An Extension of Design for Assembly Methods for Large and Heavy Parts," *ASME Japan-USA Symposium on Flexible Automation*, San Francisco, July 1992.

c8. Sturges, R.H., 1991. "Monitoring Milling Processes through AE and Tool/Part Geometry," *Proc. 4th World Meeting on Acoustic Emission*, Sept. 1991, Boston MA.

c9. Sturges, R.H., and Laowattana, S., 1992. "Virtual Wedging in Three Dimension Peg Insertion Tasks," *Proc. ASME 4th Flexible Assembly Systems Conf.*, Sept 1992, Phoenix, AZ, pp tbd..

c10. O'Shaughnessy, K., and Sturges, R.H., 1992. "A Systematic Approach to Conceptual Design," *ASME Fourth Int'l Conf. on Design Theory and Methodology,* Sept 1992, Phoenix, AZ, pp tbd.

c11. Wong, J. H.-W., and Sturges, R.H., 1992. "Design for Assembly Factors for Large and Heavy Parts," *Proc. ASME 18th Design Automation Conf.*, Sept 1992, Phoenix, AZ, pp tbd.

c12. Sturges, R.H., and Yang, J.-T., 1992. "Design for Assembly Evaluation of Orientation Difficulty Features," *Proc. ASME 18th Design Automation Conference*, Scottsdale, AZ, Sept. 13-16, pp tbd.

c13. Sturges, R.H., 1992. "Towards Computer-Aided Value Engineering," *Proc. Soc. American Value Engineers Conference -- 1992*, Phoenix, AZ, June 1992, pp tbd.

c14. Sturges, R.H., and Laowattana, S., 1992. "Virtual Wedging in Three Dimensional Peg Insertion Tasks," *IEEE Int'l Conf. on Intelligent Robots and Systems (IROS '92) ,* Raleigh, NC, July, 1992, pp tbd.

c15. Sturges, R.H., and Yang, J.-T., 1992. "Design for Assembly Evaluation of Orientation Difficulty Features," *Proc. ASME National Design Engineering Conference*, Chicago, Il, Feb 24-27, 92-DE-8.

c16. Sturges, R.H., 1992. "Stability Models for Analog Matrix Inversion," *Proc IASTED Conf on Control & Robotics*, Vancouver, BC, Aug 4-7, 92

c17. Sturges, R.H., 1992. "Accuracy Improvement for Analog Matrix Inversion," *Proc IASTED Conf. on Control & Robotics,* Vancouver, BC, Aug 4-7, 92

c18. Sturges, R.H., 1992. "A Computational Model for Conceptual Design," *Proc. AI in Design '92,* June 1992, Pittsburgh, PA, pp-tbd

c19. Sturges, R.H., 1992."An Approach to Zero Set-Up Panel Bending," *Proc. ASME 18th Design Automation Conference,* Scottsdale, AZ, Sept. 13-16, pp tbd.

c20. Wong, J. H.-W., and Sturges, R.H., 1992. "An Index of Difficulty for Manual Assembly of Large and Heavy Parts," *ASME PED Symp. on Concurrent Engineering,* 1992 Winter Annual Meeting.

c21. Sturges, R.H., and Yang, J.-T., 1992. "Design for Assembly Evaluation of Orientation Difficulty Features," *ASME PED Symp. on Concurrent Engineering,* 1992 Winter Annual Meeting.

c22. U. Flemming, S. Finger, J. Adams, C. Carlson, R. Coyne, S. Fenves, R. Ganeshan, J. Garrett, A. Gupta, Y. Reich, D. Siewiorek, R. Sturges, D. Thomas, R. Woodbury, 1992, "Form-Function Synthesis in Engineering Design," AAAI Fall Symposium Series, *Design from Physical Principles,* Cambridge, MA, October, 1992.

c23. Wang, C-H., & Sturges, R.H., "Concurrent Product/Process Design with Multiple Representations of Parts," *'93 IEEE Robotics & Automation Conf.,* Atlanta GA, May 2-7, 1993.

c24. Sturges, R.H., "The Function of Value Engineering," *9th International Conference on Engineering Design,* The Hague, The Netherlands, Aug 17-19, 1993.

c25. Sturges, R.H., & Reed, R.G., "An Application of Extended Function Logic to the Design of a Wearable Computer."*9th International Conference on Engineering Design,* The Hague, The Netherlands, Aug 17-19, 1993.

c26. Sturges, R.H., 1993. "The Function of Value Engineering," *ASME Design Automation Conference,* Albuquerque, NM, Sept 19-22, 1993.

c27. Reed, R.G., & Sturges, R.H., "A Model for Performance-Intelligent Design Advisors," *ASME Design Automation Conference,* Albuquerque, NM, Sept 19-22, 1993.

c28. Hunt, D.O. & Sturges, R.H., 1993. "Application of an Information-Based Design for Assembly Theory to Assembly Workstation Design," *ASME Design Automation Conference,* Albuquerque, NM, Sept 19-22, 1993.

c29. Sturges, R.H., and Laowattana, S., 1993. "A Spatial Freedom Representation Derived from Solid Models," *ASME Design Automation Conference,* Albuquerque, NM, Sept 19-22, 1993.

c30. Hunt, D.O. & Sturges, R.H., 1994."Detection and Evaluation of Planes of Partial Symmetry in CAD Models," *ASME Design Automation Conference,* Minneapolis, NM, Sept. 1994.

c31. Sturges, R.H. & Hunt, D.O., 1994."Acquisition Time Reduction through New Design for Assembly Heuristics," *ASME Design Automation Conference,* Minneapolis, NM, Sept. 1994.

c32. Sturges, R.H., and Laowattana, S., 1994. "Passive Assembly of Non-Axi-Symmetric Rigid Parts," *IEEE Int'l Conf. on Intelligent Robots and Systems (IROS '94)* , Germany, September 11-18, 1994.

c33. Sturges, R.H., and Laowattana, S., "A Voice-Actuated Tendon-Controlled Device for Endoscopy," *Medical Robotics and Computer Assisted Surgery Conference,* September 22-24, Sept. 1994 Pittsburgh, PA.

c34 Sturges, R.H., and Laowattana, S., 1994. "Polygonal Peg Insertion with Orthogonal Compliance," presented at *ASME Japan-USA Symposium on Flexible Automation,* Kobe, Japan, July 11-18, 1994. Also presented at the *5th ASME Conference on Flexible Assembly Systems*, Minneapolis, NM, Sept. 1994.

c35. Sturges, R.H., and Laowattana, S., 1995. "Fine Motion Planning through Constraint Network Analysis," *1995 IEEE Int'l Sym. on Assembly and Task Planning,* Aug 10-11, Pittsburgh, PA, pp. 160-170.

c36. Roston, G. and Sturges, R.H., 1995. "Genetic Design Methodology for Structure Configuration," 1995 *ASME Design Automation Conference,* Sept. 12-17 Boston, MA.

c37. Elkins, K. & Sturges, R.H., 1995. "Towards Flexible Sheet Metal Manufacture through In-Process Angle Measurement and Control," *ASME WAM, PED Symp. on Dimensional Measurement, Analysis and Control for Sheet Metal Forming and Assembly.* Dec. 1995.

c38. Ayyadevara, V, & Sturges, R.H., 1996. "Determination of Optimally Stable Position of a Sheet Metal Part for Automated Handling," *CSME Forum 1996, 13th Symp. on Engineering Applications of Mechanics,* McMaster University, Ontario, Canada, pp. 286-290.

c39. Sturges, R.H., & Sathirakul, K., 1996. "An Analysis of Multiple Peg and Hole Insertion Tasks," *ASME DTC/CIE96,* Irvine, CA, August, 1996.

c40. Kopp, A.-C., Sturges, R.H., Kalra, A., & Kekre, S., 1996. "Value Implications of Green Design," *ASME DTC/CIE96,* Irvine, CA, August, 1996.

c41. Kopp, A.-C., & Sturges, R.H., 1996. "An All-Shear Pad Spatial Remote Center Compliance Design," *Japan-USA Symposium on Flexible Automation,* Boston, MA July, 1996.

c42. Sturges, R.H., & Ayyadevara, V., 1996. "Analysis of Stability of Sheet Metal Parts for Automatic Handling," *Japan-USA Symposium on Flexible Automation,* Boston, MA July, 1996.

c43. Sturges, R.H., & Sathirakul, K., 1996. "Modeling Multiple Peg and Hole Insertion Tasks," *Japan-USA Symposium on Flexible Automation,* Boston, MA July, 1996.

c44. Sturges, R.H., & Ayyadevara, V., 1997. "Automated Planning for Stacking of Bent Sheet Metal Parts," *Proc. ASME DETC'97,* Sept. 14-17, 1997, Sacramento, CA, access DFM4317. (CD-ROM)

c45. Sturges, R.H., & Sathirakul, K., 1997. "Jamming Conditions for Multiple Peg and Hole Assemblies," *Proc. ASME DETC'97,* Sept. 14-17, 1997, Sacramento, CA, access DFM4329. (CD-ROM)

c46. Sturges, R.H., & Sathirakul, K., 1997. "A Generalized Jamming Diagram for Assembly Analysis and Planning," *Proc. IASTED Conf. on Robotics and Manufacturing,* Cancún, Mexico, May 29-31, 1997, pp 291-296.

c47. Sturges, R.H., & Sathirakul, K., 1997. "Solving Off-Axis Peg-in-Hole Insertion Problems with an RRR Compliant Mechanism," *Proc. ASME Conf. on Flexible Assembly Systems,* Cincinatti, OH, Oct, 1997, pp tbd.

c48. Sturges, R.H., & Sathirakul, K., 1998. "Design Of An Isotropic Compliance Mechanism for Off-Axis Peg-In-Hole Insertion," *Proc. ASME DETC'98,* Sept. 13-16, 1998, Atlanta, GA, pp tbd.

c49. Sturges, R.H., & Sathirakul, K., 1999. "Compliance Design through Constraint Network Analysis" *Proc. Japan-USA Symposium on Flexible Automation*. Otsu, Japan, July 12-15, 1999, pp tbd.

c50. Marehalli, J.N. & Sturges, R.H., 1999. "Practical Passive Assembly: Gripper Design and Assembly Sequence Optimization", *Proc. ASME DETC'99,* Sept. 12-14, 1999, LasVegas, NV, CD-ROM: DETC99/DFM-8946

c51. Wiedmann, S.L. & Sturges, R.H., 1999. "Passive Assembly of Screws: Part I Modeling Screw Threads for Contact Analysis," *Proc. ASME DETC'99,* Sept. 12-14, 1999, LasVegas, NV, CD-ROM: DETC99/DFM-8975

c52. Sainani, M.R. & Sturges, R.H., 1999. "Quantifying Robotic Assembly Capability: A Review and a Prospectus," *Proc. FAIM '99,* June 23-25, Tilburg, Netherlands.

c53. Marehalli, J.N. & Sturges, R.H., 1999. "Optimization of Assembly Paths Through Quantifying Assembly Difficulty," *Proc. FAIM '99,* June 23-25, Tilburg, Netherlands.

c54. Ayyadevara, V.R., Bourne, D.A., Shimada, K., & Sturges, R.H., 1999. "Determining Near Optimal Interference-free Polyhedral Configurations for Stacking," IEEE ISATP, July 21-24, Porto, Portugal.

c55. Kanarat, A. & Sturges, R.H., 2000. "Modeling Of A Multi-Unit Tracked Vehicle," *Proc. Japan-USA Symposium on Flexible Automation*. Ann-Arbor, MI, July 24-26, 2000, pp tbd.

c56. Varadhan, A. & Sturges, R.H., 2000. "A Software Based Hierarchical Real Time Control System for Rapid Development of Mobile Robot Prototypes," *Proc. Japan-USA Symposium on Flexible Automation*. Ann-Arbor, MI, July 24-26, 2000, pp tbd.

c57. Marehalli, J. & Sturges, R.H., 2000. "Recognition of Contact States – Validation of Planning with Principal Contacts," *Proc. ASME DETC'00,* Sept. 10-13 2000, Baltimore MD, CD-ROM: DETC2000/DFM-tbd

c58. Wiedmann, S. & Sturges, R.H., 2000. "Kinematic Analysis Of Threaded Fastener Assembly In 3 Dimensions," *Proc. ASME DETC'00,* Sept. 10-13 2000, Baltimore MD, CD-ROM: DETC2000/DFM-tbd

c59. Abbott, M.W., & Sturges, R.H., 2001 "Towards Massively Parallel MEMS Assembly", *Proc. ASME DETC'01*, September 9-12, 2001 Pittsburgh, PA

c60. Kanarat, A. & Sturges, R.H., 2002. "Autonomous Haulage Vehicle," *Proc. Japan-USA Symposium on Flexible Automation*. Hiroshima, Japan, July 15-17, 2002, pp tbd.

c61. Moutran, S, & Sturges, R.H., 2002. "Mapping the Effective Workspace of a 6-dof Articulated Robot for Fiber Placement," *Proc. Japan-USA Symposium on Flexible Automation*. Hiroshima, Japan, July 15-17, 2002, pp tbd.

c62. Lee, M. & Sturges, R.H., 2002. "Robotic End - Effector Design Basis For Composite Fiber Placement," *Proc. Japan-USA Symposium on Flexible Automation*. Hiroshima, Japan, July 15-17, 2002, pp tbd.

c63. Anderson, R., & Sturges, R.H., 2002. "A case study in extended value engineering", *Proc. ASME DETC'02* Sept. 29-Oct.2, 2002 Montreal, Canada

c64. Moutran, S., & Sturges, R.H., 2002. "Process design for the automation of online-consolidation composite fiber placement", *Proc. ASME DETC'02* Sept. 29-Oct.2, 2002 Montreal, Canada

c65. Abbott, M.W., & Sturges, R.H., 2002 "Robotic Compliance Analysis For Composite Material Processing Part I", *Proc. ASME IMECE 2002* November 17 - 22, 2002 New Orleans, LA

c66. Wongwanich , Y., & Sturges, R.H., 2002 "Design For Assembly Methods For Large And Heavy Plates", *Proc. ASME IMECE 2002* November 17 - 22, 2002 New Orleans, LA

c67. Fong, N.H., Shewchuk J.. P., and Sturges R. H, "Classical Control Theory Analysis of a Lean Manufacturing System", Proceedings Industrial Engineering Research Conference (IERC), May 15-19, 2004, Houston, TX, *"Best Paper Award in Manufacturing Systems"*

c68. Munki Lee, J. Choi, and Robert H. Sturges, "Composite Heat Transfer Analysis in Contact with a Rigid Heater for Fiber Placement ", SAMPE Symposium & Exhibition, May 16-20, 2004. *Nominated for Best Paper*

c69. Fong, N.H., Sturges R. H., and Shewchuk J. P., "Understanding System Dynamics via Transfer Function in Modeling Production Control Systems," Proceedings 14th International Conference on Flexible Automation and Intelligent Manufacturing (FAIM 04), July 12-14, 2004, Toronto, Ontario, Canada

c70. Fong, N.H., and Sturges R. H., "Modeling and Design of a Responsive Manufacturing System Using Classical Control Theory and Six-Sigma Methodology" Proceedings 58th Annual Quality Congres, May 24-26, 2004, Toronto, Ontario, Canada. *Awarded "Best Student Paper"*

c71. Radu F. Babiceanu, F. Frank Chen, Robert H. Sturges, "Reactive Scheduling of Material Handling Devices using the Holonic Control Approach," Proceedings of the 14th International Conference on Flexible Automation & Intelligent Manufacturing (FAIM 2004), Toronto, Canada.

c72. Radu F. Babiceanu, F. Frank Chen, Robert H. Sturges, "Internal Agent Architecture for Agent-Based Material Handling Systems," Proceedings of the Industrial Engineering Research Conference (IERC 2004), Houston, Texas.

c73. Kanarat, A. and Sturges, R. H., "Motion planning for nonholonomic mobile robots under control uncertainty," CAD' 04 International CAD Conferences and Exhibitions, May 24-28, 2004. Pattaya, Thailand

c74. Kanarat, A. and Sturges, R. H., "Robust Path Planning and Following for Mobile Robots under Uncertainties: A Control Uncertainty Field Approach," Proceedings of the 14th International Conference on Flexible Automation & Intelligent Manufacturing (FAIM 2004), Toronto, Canada.

c75. Junghun Choi, and Robert H. Sturges, "Preliminary Element Design and Analysis of a Smart Endoscope", Flexible Automation & Intelligent Manufacturing, Toronto, Canada, July 12-14, 2004.

c76. Junghun Choi, and Robert H. Sturges, "Design and Simulation of a Smart Endoscope", Intelligent Manupulation and Grasping, Genoa, Italy, July 1-2, 2004.

c77. Junghun Choi, and Robert H. Sturges, "Design and Simulation of a Smart Endoscope: Part 2", ASME International Mechanical Engineering Congress and RD&D Expo ,Anaheim, California, Nov. 13-19, 2004.

c78. Sturges, R. H. , Loos, A, and Viehland, D., "Processing of Composites" Proceedings International Conference On Composites/Nano Engineering , ICCE-10, July 20-26, 2003 New Orelans, LA

c79. Munki Lee, Junghun Choi, and Robert H. Sturges, "Modeling Contact Heat Transfer for Composite Fiber Placement ", Japan-USA Symposium on Flexible Automation, July 19-21, 2004. Denver, CO, *Awarded "Best Paper"*.

c80. Munki Lee, J. Choi, and Robert H. Sturges, “Process Design for Composite Fiber Placement with a Solid Contact Heat Source “, Flexible Automation & Intelligent Manufacturing, Toronto, Canada, July 12-14, 2004.

c81. Anderson, R. and Sturges, R. H., “The Use of Behavior in the Design of Complex Systems” CAD’ 04 International CAD Conferences and Exhibitions, May 24-28, 2004. Pattaya, Thailand

c82. Anderson, R. and Sturges, R. H., “Inherent Behavior in Complex Systems”, Japan-USA Symposium on Flexible Automation, Denver, CO, July 19-21, 2004.

c83. Babiceanu, R. F., F. F. Chen, and R. H. Sturges "The influence of material handling operations on the schedule makespan in manufacturing cell environments" NAMRC 33. 24-27 May 2005, Columbia University, New York

c84 Musa, R, Sturges, R.H., & Chen F.F. “Process Capability Allocation in the Extended Enterprise Environment” NAMRC 34 (Marquette University, May 23-26, 2006)

c85. Anderson, R. and Sturges, R. H., “Quantified Behavior as an Optimization Algorithm” CAD’06 International CAD Conferences and Exhibitions, Jun 19-23, 2006. Phuket, Thailand

c86. Anderson, R. And Sturges, R. H., “Characterization Of Performance, Robustness, And Behavior Relationships In Adaptable Systems”, Int’l Symposium On Flexible Automation, Osaka, Japan, July 10-12, 2006.

c87. Musa, R, Sturges, R.H., & Chen F.F. “Dynamic Variation Reduction Technique in Assembly Lines after Batch Inspection”, Int’l Symposium On Flexible Automation, Osaka, Japan, July 10-12, 2006.

c88. Musa, R. and Sturges, R. H., “Agile Inspection Planning Based on CAD-Data” CAD’06 International CAD Conferences and Exhibitions, Jun 19-23, 2006. Phuket, Thailand

c89. Sturges, R. H., “A CAD Approach to Upper-Bound Solutions” CAD’06 International CAD Conferences and Exhibitions, Jun 19-23, 2006. Phuket, Thailand

c90. Musa, R, Sturges, R.H., & Chen F.F. “Comprehensive Inspection Planning for Newly Launched Products in Assembly Lines Using CAD Data” IERC 2006 Orlando, FL, May 20-24, 2006)

c91. Chaudhari, G.S., Sturges, R.H, Sandu, C., "On the underlying structure of system dynamics models", Proceedings of the 27th International Conference of the System Dynamics Society, Albuquerque, NM (2009).

C. *Other Conference Papers (not peer reviewed, or reviewed by abstract):*

a1. Sturges, R.H., 1982. “A Sheet Metal FMS Simulation System,” *FABTECH Proceedings*, Chicago, IL, February.

a2. Sturges, R.H., 1984. “A Wire Harness Flexible Manufacturing System,” *Autofact 6 Proceedings,* Anaheim CA, October.

a3. Sturges, R.H., 1987. “The Design for Assembly Calculator,” *EMACTECH Proceedings,* Pittsburgh, PA, May.

a4. Sturges, R.H., 1989. "Toward Achieving Dexterity in Flexible Assembly Systems," *16th NSF Conf. on Manufacturing Systems,* Arizona State University, Jan 1990.

a5. Sturges, R.H., 1991. “A Kinematic Approach to Teleoperator Safety,” *17th NSF Conf. on Manufacturing Systems,* University of Texas at Austin, Jan 1991.

a6. Sturges, R.H., 1991. “Workholding and Design for Manufacture,” *17th NSF Conf. on Manufacturing Systems,* University of Texas at Austin, Jan 1991.

a7. Wong, J. H.-W., and Sturges, R.H., 1992. “An Extension of Design for Assembly Methods for Large and Heavy Parts” *18th NSF Conf. on Manufacturing Systems,* Georgia Institute of Technology, Jan 1992.

a8. Kilani, M. I., and Sturges, R.H., 1992. “Detection and Evaluation of Orientation Features for CAD Part Models” *18th NSF Conf. on Manufacturing Systems,* Georgia Institute of Technology, Jan 1992.

a9. Sturges, R.H., and Laowattana, S., 1992. “Virtual Wedging in Three Dimensions,” *18th NSF Conf. on Manufacturing Systems,* Georgia Institute of Technology, Jan 1992, pub. by SME, NY, NY.

a10. Sturges, R.H., and Kilani, M. I., 1993. “A Computer-Aided Function Logic Sketchpad,” *19th NSF Conf. on Manufacturing Systems,* North Carolina State University, Jan 1993, pub. by SME, NY, NY.

a11. O’Shaughnessy, K., and Sturges, R.H., 1993. “A Systematic Approach to Conceptual Design,” *19th NSF Conf. on Manufacturing Systems,* North Carolina State University, Jan 1993, pub. by SME, NY, NY.

a12. Sturges, R.H., 1993. “A Computational Model for Conceptual Design,” *19th NSF Conf. on Manufacturing Systems,* North Carolina State University, Jan 1993, pub. by SME, NY, NY.

a13. Sturges, R.H., and Hunt, D., 1993. “Application of DfA Theory to Optimal Assembly Workstation Design,” *19th NSF Conf. on Manufacturing Systems,* North Carolina State University, Jan 1993, pub. by SME, NY, NY.

a14. Sturges, R.H., and Laowattana, S., 1993. "Representations of Rotational and Translational Freedom with Extended Screw Theory," *19th NSF Conf. on Manufacturing Systems,* North Carolina State University, Jan 1993, pub. by SME, NY, NY.

a15. Sturges, R.H., and Laowattana, S., 1993. "A Voice-Controlled Flexible Device for Endoscopy," *Forum on Medical Robotics and Computer Assisted Surgery,* June 12, 1993, Pittsburgh, PA,

a16. Wang, C-H., & Sturges, R.H., 1994. "Concurrent Product/Process Design with Multiple Representations of Parts," *20th NSF Conf. on Manufacturing Systems,* MIT, Jan 1994, pub. by SME, NY, NY.

a17. Sturges, R.H., 1994. "The Function of Value Engineering," *20th NSF Conf. on Manufacturing Systems,* MIT, Jan 1994, pub. by SME, NY, NY.

a18. Reed, R.G., & Sturges, R.H., 1994. "A Model for Performance-Intelligent Design Advisors," *20th NSF Conf. on Manufacturing Systems,* MIT, Jan 1994, pub. by SME, NY, NY.

a19. Sturges, R.H., and Laowattana, S., 1994. "A Spatial RCC for Non-Axisymmetric Passive Assembly," *20th NSF Conf. on Manufacturing Systems,* MIT, Jan 1994, pub. by SME, NY, NY.

a20. Dao, H. &, Sturges, R.H., 1995. "Functional Representations of Conceptual and Preliminary Design"*21st NSF Conf. on Manufacturing Systems,* UCSD, Jan 1995, pub. by SME, NY, NY.

a21. Sturges, R.H., and Hunt, D., 1995. "Detection and Evaluation of Planes of Partial Symmetry in CAD Models,"*21st NSF Conf. on Manufacturing Systems,* UCSD, Jan 1995, pub. by SME, NY, NY.

a22. Sturges, R.H. & Hunt, D.O., 1995. "Reduction of Acquisition Time through New Design for Assembly Heuristics," *21st NSF Conf. on Manufacturing Systems,* UCSD, Jan 1995, pub. by SME, NY, NY.

a23. Kopp, A.-C., Sturges, R.H., Kalra, A., & Kekre, S., 1996. "Value Implications of Green Design: A Preliminary Progress Report," *22nd NSF Design & Manufacturing Grantees Conf.,* Albuquerque, NM, Jan 1996, pub. by SME, Dearborn, MI.

a24. Kopp, A.-C., & Sturges, R.H., 1996. "An All-Shear Pad Spatial Remote Center Compliance Design," *22nd NSF Design & Manufacturing Grantees Conf.,* Albuquerque, NM, Jan 1996, pub. by SME, Dearborn, MI.

a25. Sturges, R.H., & Ayyadevara, V., 1996. "Analysis of Stability of Sheet Metal Parts," *22nd NSF Design & Manufacturing Grantees Conf.,* Albuquerque, NM, Jan 1996, pub. by SME, Dearborn, MI.

a26. Kopp, A.-C., & Sturges, R.H., 1996. "Prismatic Peg and Hole Assembly Time Tests," *22nd NSF Design & Manufacturing Grantees Conf.,* Albuquerque, NM, Jan 1996, pub. by SME, Dearborn, MI.

a27. Sturges, R.H., & Sathirakul, K., 1996. “Modelling Multiple Peg and Hole Insertion Tasks,” *22nd NSF Design & Manufacturing Grantees Conf.,* Albuquerque, NM, Jan 1996, pub. by SME, Dearborn, MI.

a28. Sturges, R.H., & Sathirakul, K., 1996. “Compliance Mechanism Design Methodolgy for Passive Assembly,” *22nd NSF Design & Manufacturing Grantees Conf.,* Albuquerque, NM, Jan 1996, pub. by SME, Dearborn, MI.

a29. Sturges, R.H., & Ayyadevara, V., 1997. “Analysis of Stability of Sheet Metal Parts for Automated Part Handling,” *Proc. 1997 NSF Design & Manufacturing Grantees Conf.,* Seattle, WA, Jan 7-10, 1997, pub. by SME, Dearborn, MI.

a30. Sturges, R.H., & Sathirakul, K, 1997. “An Analysis of Pen-in-Hole Insertion Tasks: Beyond Chamfer-Crossing,” *Proc. 1997 NSF Design & Manufacturing Grantees Conf.,* Seattle, WA, Jan 7-10, 1997, pub. by SME, Dearborn, MI.

a31. Sturges, R.H., & Ayyadevara, V., 1998. “Automated Planning for Stacking of Polyhedral Sheet Metal Parts,” *Proc. 1998 NSF Design & Manufacturing Grantees Conf.,* Monterrey, Mexico, Jan 5-7, pub. by SME, Dearborn, MI.

a32. Sturges, R.H., & Sathirakul, K, 1998. “Passive Assembly Approach To Off-Axis Peg-in-Hole Insertion,” *Proc. 1998 NSF Design & Manufacturing Grantees Conf.,* Monterrey, Mexico, Jan 5-7, pub. by SME, Dearborn, MI.

a33. Wiedmann, S. & Sturges, R.H., 1999. “Screw Insertion by Passive Asembly,” *Proc. 1999 NSF Design & Manufacturing Grantees Conf.,* Los Angeles, CA, Jan 4-6, pub. by SME, Dearborn, MI.

a34. Sainani, M. & Sturges, R.H., 1999. “Review of Robotic Manipulability Measures,” *Proc. 1999 NSF Design & Manufacturing Grantees Conf.,* Los Angeles, CA, Jan 4-6, pub. by SME, Dearborn, MI.

a35. Jayavardhan, M., & Sturges, R.H., 1999. "Sensor-Free Robotic Assembly" *Proc. 1999 NSF Design & Manufacturing Grantees Conf.,* Los Angeles, CA, Jan 4-6, pub. by SME, Dearborn, MI.

a36-a49. Fourteen (14) Technical Reports delivered as part of our Phase One activities for ONR, Panama City, FL.

D. *Sections or Chapters:*

1. Sturges, R.H., 1992. “Reliability and Safety in Teleoperation,” book chapter in *Safety, Reliability and Human Factors in Robotic Systems,* James H. Graham, editor, Van Nostrand-Reinhold, January 1992.

2. Sturges, R.H., and Laowattana, S., 1996. “A Voice-Actuated Tendon-Controlled Device for Endoscopy,” book chapter in *Computer Integrated Surgery*, R.H. Taylor, ed. MIT Press, pp. 603-617.

E. *Abstracts, Reviews:* None

F. *Other Writings:*

Theses:

Sturges, R.H., 1969. “Design Modifications of the ME Brailler,” SB-SM Thesis, MIT.

Sturges, R.H., 1986. “On Dexterity,” Ph.D. Dissertation, Carnegie Mellon University.

Industrial Course Notes:

Dorman, J.G., Sturges, R.H., and Brecker, J.N., 1986. "Design for Producibility," ©Westinghouse Electric Corp, Westinghouse Productivity and Quality Center, 1986.

Trade Journals:

Sturges, R.H., 1983. “Double the Apple II’s Color Choices,” *BYTE Magazine,* November, 1983.

CMU Publications:

Sturges, R.H., “Moving Body and Mind: From Industry to University,” *CIT,* Summer 1991.

Sturges, R.H., in “Motivating Students,” *University Teaching Center Newsletter,* Vol. 1, No. 2, S. Ambrose, Ed.

Selected Research Report Titles from Westinghouse Electric Corporation:

Please Note: The majority of the author's work between April 1974 and October 1987 is proprietary to the Westinghouse Electric Company and remain in their library. The selection below is representative of these works. Corporate departmental policy regarding listing of author’s names on research reports varied. Those titles without named authors for which the candidate is the sole or senior author are denoted with an asterisk.

w1. *“Nuclear Fuel Pellet Inspection Gaging System,” MRDD Report 76-8G8-HANFO-R1, 156pp., May 1977.

w2. *“Coupler Hand-Offs in Plug Weld Repair System,” 7J41-PLUGR-05C, 13pp, June, 1977

w3. *“Steam Generator Service Arm and Master Manipulator Design Report,” 7J42-FOLLO, 36pp, July 1977

w4. *“M/STI SAM Coupler Design Program,” 7J42-PRDES, 50pp, Sept 1977.

w5. *“Steam Generator M/STI SAM Coupler System,” 7J42-CPLTO, 19pp, Sept 1977.

w6. Sturges, R.H., 1978. “The Structurally-Efficient Manipulator,” Westinghouse R&D Center report 1J43-INHOS-R1.

w7. “Human Factors Assessment of the M/STI SAM Telerobot System” 1J43-FATIG, 70pp, January 1978.

w8. *“M/STI SAM Design Upgrading Program,” 7J43-UPGRA, 80pp, February 1978.

w9. Sturges, R.H., 1980. “Tubesheet Identification and Mapping,” Westinghouse R&D Center report 1J43-TIDMA-R1.

w10. Sturges, R.H., and Gerkey, K.S., 1980. “The Analytical, Experimental, and Design Studies of General Robotic Manipulators,” Westinghouse R&D Center report 1J43-KNUCL-R1.

w11. *“Automated Gaging System Study,” DQ-153, 35pp, June 1982.

w12. *“Wire Harness FMS Operator's Guide,” WPQC, 125pp, Sept 1987.

Research Memoranda from C. S. Draper Laboratories:

d1. Sturges, R.H., 1971. “Teleoperator Arm Design Program Principles of Operation,” MAT-33, 17 pp, Nov 1971.

d2. Sturges, R.H., 1972. “Teleoperator Arm Design Progress,” MAT-53, 11 pp, June 1972.

d3. Sturges, R.H., 1972. “On the Moving Base Problem,” MAT-54, 3pp, July 1972.

d4. Sturges, R.H., 1973. “Singularities and Redundancies of the PaR-3000 Jacobian,” MAT-80, 5 pp, January 1973.

d5. Sturges, R.H., 1973. “Six Degree of Freedom End-Effector Design,” MAT-113, 4 pp, March, 1973.

d6. Sturges, R.H., 1973. “Work Volume of a Revolute Arm,” MAT-133, 3pp, May, 1973.

d7. Sturges, R.H., 1973. “Optimization of Robot Link Parameters for Engine Assembly,” MAT-145, 5 pp, June 1973.

d8. Sturges, R.H., 1973. “Wrist Force Sensor Elasticity Analysis,” MAT-186, 4 pp, Dec, 1973.

d9. Sturges, R.H., 1974. “Wrist Force Sensor Mechanical Parameters,” MAT-211, 2 pp, March, 1974.

Research Reports from C. S. Draper Laboratories:

d10. Woodin, A.E., et al. 1972. “Annual Progress Report for the Development of Multi-Moded Remote Manipulator Systems No. 1,” C-3901, 146pp, January, 1972.

d11. Woodin, A.E., et al. 1973.“Annual Progress Report for the Development of Multi-Moded Remote Manipulator Systems No. 2,” C-3790, 174pp, January, 1973.

d12. Sturges, R.H., 1973. “Teleoperator Arm Design,” C. S. Draper Laboratories Report E-2746.

d13. Nevins, J.L., et al., 1974. “Exploratory Research in Industrial Modular Assembly,” R-800, 200pp, March, 1974.

d14. Nevins, J.L., et al., 1974. “A Scientific Approach to the Design of Computer Controlled Manipulators,” R-837, 180pp, August, 1974.

Other Reports:

o1. Sturges, R.H., & Nehring, R., 2008. "Process Mapping the LCS-1 IETM," 14 pp., Jan 2008.

o2. Sturges, R.H., Nehring, R., & Steeneck, D., 2008. "Work Measurement for the LCS-1 IETM," 110 pp., April 2008.

o3. Sturges, R.H., & Nehring, R., 2009. "Part Mating Science for the LCS-1," 14 pp., May 2009.

o4. Sturges, R.H., Nehring, R., & Steeneck, D., 2009. "Simple Task Analysis for the LCS-1," 8 pp., June 2009.

o5. Sturges, R.H., Nehring, R., & Steeneck, D., 2009. "Pareto Analysis for the LCS-1," 15 pp., April 2009.

o6. Sturges, R.H., & Steeneck, D., 2009. "Simple Task Analysis for the LCS-1," 15 pp., April 2009.

o7. Sturges, R.H., & Butler, K., 2009. "Materials Handling Analysis for the LCS-1," 14 pp., June 2009.

o8. Sturges, R.H., & Mayer, B., 2009. "Materials Handling Workshop Results," 18 pp., September 2009.

o9. Sturges, R.H., & Mead, P., 2009. "Sea State Simulation Theory," 3 pp., November 2009.

o10. Sturges, R.H., & Steeneck, D., 2009. "Cost-Time Profiling for the LCS-1," 13 pp., September 2009.

o11. Sturges, R.H., & Showalter, M., 2009. "Sea-State Simulator Design and Control," 66 pp., September 2009.

G. *Discussions:*

"Research Opportunities in Flexible Assembly," Panelist, ASME Design Technical Conferences, 14 Sept, 1992, Scottsdale, AZ

H. *Patents Awarded:*

Title	Number	Date
1. Remote Access Manipulator	4,168,782	09-25-79
2. Photoelectric Docking Device	4,295,740	10-20-81
3. Electromech. Display Apparatus	4,316,189	02-16-82
4. Pellet Inspection Apparatus	4,349,112	09-14-82
5. Surface Flaw Detection	4,377,238	03-22-83
6. Apparatus and method for classifying fuel pellets for nuclear reactor	4,448,680	04-15-84
7. Fuel Transfer Manipulator	4,485,067	11-27-84
8. Vernier Press Brake Die Set	4,489,587	12-25-84
9. Apparatus for Mapping...an Element within a Field of Elements	4,503,506	03-05-85
10. Manipulator ... for Decontaminating Nuclear Steam Generators	4,521,844	06-04-85
11. Wire Routing & Terminating Device	4,862,927	09-04-89
12. Apparatus for Assembly of Axisymm-etric and Non-Axisymmetric Rigid Parts	5,396,714	03-14-95
13. Flexible Steerable Device for Exploratory Procedures	5,759,151	09-03-97
14. Method and apparatuses for .... control of bending operations	5,761,940	06-09-98
15. Method and apparatuses for .... control of bending operations	6,292,716	09-18-01
16. Automated continuous haulage system	7,076,346	07-11-06

GRANTS AND CONTRACTS

A. *Awarded to Date*

1. Analog Matrix Inversion, CMU Faculty Grant, $4,800, 1988-1990, Principal Investigator.

2. Design for Assembly Evaluation, Engineering Design Research Center. NSF Support: $243,000 from 1988 through 1994. Principal Investigator

3. Development of Smart Endoscopes, Center for Entrepreneurial Development, $15,000 in-kind; Pittsburgh Roboscope Co., PA, $17,000 in-kind; Advanced Technology Center of Western PA, $48,000; and, AT&T Foundation, $30,000, 1988-1989. Principal Investigator

4. Representation of Aircraft Design Data for Supportability, Operability, and Producibility Evaluations, Boeing Helicopter Company, $58,000, June 1989 - December 1989. Principal Investigator

5. The Teaching Factory, DARPA, General Motors, $35,000, 1988-1989. Co-Principal Investigator with Duane Adams (Computer Science), et al.

6. "1990 George Talman Ladd Award," Carnegie Mellon University, $3,000, 1990.

7. Design for Manufacture of the CMT, U.S. Post Office, Mellon Institute, $35,000, 1989-1990. Role: Principal Investigator

8. Intelligent Manufacturing Workcell, DARPA, CMU-RI. This co-PI granted $35,000. Co-Principal Investigator with David Bourne (Robotics)

9. Toward Achieving Dexterity in Flexible Assembly Systems, NSF Research Initiation, $60,000, September 1989 - August 1990. Principal Investigator

10. Function Logic Models of Design, AT&T Grant to EDRC, $12,500, 1990-1991. Principal Investigator

11. Research in Rapid Assembly and Part Design, NSF PYI, $312,500, August 1990 - July 1995. Principal Investigator

12. Design for Manufacture of the CMT, U.S. Post Office, Mellon Institute, $21,000, 1990. Principal Investigator

13. Mail Flow Analysis, U.S. Post Office, Mellon Institute, $10,000, 1990. Principal Investigator

14. An Intelligent Bending Workstation, U.S. Amada Corp, $55,000/year, July 1991 through June 1995. Co-Principal Investigator with D. Bourne (Robotics) and P. Khosla (ECE)

15. Devices for Advanced Laparoscopic Surgery, Mercy Hospital Foundation, $15,000, September 1991. (Awarded, but withdrawn due to change of personnel at Mercy Hospital.) Principal Investigator

16. Development of Smart Endoscopes, CMU Faculty Development, $2,000, August 1992. Principal Investigator

17. Value Chain Implications for Green Design, NSF Management of Technological Innovation Program, $200,000, October 1994 - September 1997. Co-Principal Investigator with S. Kekre and K. Srinivasan (GSIA)

18. Planning Assembly of Sheet Metal Products, U.S. Amada Corp., $75,000/year, January 1995 through May 1997. Co-Principal Investigator with D. Bourne (Robotics)

19. Grant for research in Design for Manufacture, Westinghouse Electric Corp, $21,000, December 1994. Principal Investigator

20. Total Passive Automatic Assembly, NSF DMII, May 1995 - April 1998, $260,000. Principal Investigator

21. Contact State Space: Automatic Generation, Reasoning and Search, NSF CISE/IRI: Robotics and Machine Intelligence, Sept. 1997-Aug 1999, Grant No. GPG/NSF 95-27, $225,000. Co-PI ($78,000) with Dr. Jing Xiao, PI, of UNC-Charlotte.

22. Mobile Bridge Carrier Guidance, Long-Airdox Corp. and Virginia CIT, Aug 1998-July 1999. $200,000. Principal Investigator

23. Green Engineering Curriculum Development, VT, Aug 1998-May 1999. $5,000. Principal Investigator

24. Environmentally Conscious Manufacturing, VT ReachOUT, Oct 1998-June 1999. $7,500. Principal Investigator

25. Continuous Miner and Battery Haulage Design, Long-Airdox Corp. and Virginia CIT, Aug 1999-July 2000. $200,000. Principal Investigator

26. Continuous Haulage and Battery Haulage Analysis & Manufacturing, Long-Airdox Corp. and Virginia CIT, Aug 2000-July 2001. $80,000. Principal Investigator

27. Non-Autoclave Composite Materials and Structures, NASA, through UNO/NCAM program, June 2001-March 2002. $389,000. Co-PI ($122,530)

28. Pre-Fabricated Steel Building Analysis, Future Steel Ltd., Ont. Canada, $27,900. Principal Investigator

29. Center for High Performance Manufacturing, Virginia CTRF, July 2001-2004. $4.35 million, one of 12 co-PI's ($77,161)

30. Advanced Weapons Elevator, Newport News Shipbuilding, March 2002-December 2002. $370,000. Co-PI with Virginia Consortium for Material Handling and logistics, ($50,000)

31. Non-Autoclave Composite Materials and Structures, NASA, through UNO/NCAM program, June 2002-March 2003. $200,000. Co-PI ($65,000)

32. Continuous Haulage and Battery Haulage Analysis & Manufacturing, DBT America, Jan 2002-May 2003. $12,500. Principal Investigator

33. Nat'l Center for Advanced Manufacturing/NASA, "Non-Autoclave Processing And Manufacture Of Large Reusable Aerospace Structures", co-PI with Al Loos, et al. (VT ESM), This co-PI responsible for $65,300 in Year 3 (July 03-March 04) due to cut-back in the program from original levels.

34. Center for High Performance Manufacturing, Virginia CTRF, July 2001-2004. $4.35 million, one of 12 co-PI's ($77,161)

35. CHPM Company Project: Bristol Compressor, PI, $49,875. (Aug 03-Feb 04)

36. CHPM Company Project: DBT Hillsville, PI, Aug 25 '03, $25,025. (Aug 03-Dec 03)

37. CHPM Company Project: Federal-Mogul, co-PI 25%, $27,975 + $12,102 cost sharing. (July 03-Dec 03)

38. DBT America, Pulaski Division, "Control of REACH System Vehicles,"2 projects initiated. 15 Aug 03, PI, $24,180; and 1 Jan 04, PI, $30,677. (Aug 03-Jun 04)

39. International Technologies of Pittsburgh, two gifts of $10,000 each, in December, 2003, and in April '04 "to support Professor Robert H. Sturges's research and laboratory work in Engineering Design and Manufacturing Processes."

40. CHPM Center Project: PI, $48,736 "Process Mapping and Cost-Time Profiling in Support of Lean Manufacturing". (July 04-July 05)

41. Titan Corp. PI, $110,000 "Designing and Defending Against Swarming Behavior", (Aug 04-May 05)

42. NSF, "Embodiment Awareness" Sub Fund $45,000; supporting Francis Quek, PI

43. CHPM Project "Strain Model" $8,000, PI, for Metalsa Corp.

44. Nat'l Center for Advanced Manufacturing/NASA, "Non-Autoclave Processing And Manufacture Of Large Reusable Aerospace Structures", co-PI with Romesh Batra, et al. (VT ESM), responsible for $22,000 in Year 5 (July 05-March 06).

45. Concoa, Inc., “New Product Design & Development”, PI, $48,812 from Concoa, $26,765 State match, total = $75,487.

46. ONR, “Meeting Mandated Manning Requirements Through Effort Leveling”, PI, $1,577,418; co-PI’s Thurmon Lockhart and Roger Anderson; responsible for $981,318. (Jan 08-May 09)

47. ONR, “Meeting Mandated Manning Requirements Through Effort Leveling: Phase 2”, PI, $745,404; co-PI Thurmon Lockhart; responsible for $372,702. (Jan 10-May 11)

48. TEMCI, "New Product and Process Development for SVI", PI, $80,000; responsible for $80,000. (June 2011, May 2012)

49. TEMCI, "Second Product and Process Development for SVI", PI, $80,000; responsible for $80,000. (June 2012, May 2013)

Total as PI: $4,556,069; Total in Research Projects $8,216,822 (Nov 1987 - present)

B. Proposals Pending total requested in FY 2011 = $880,000.

PROFESSIONAL ACTIVITIES

A. *Short Courses:*

1. “Design for Quality in Manufacturing,” for the Carnegie Bosch Institute, Advanced Program for Technical Managers, 8 class contact hours: August 1991.

2. “Manufacturing Concerns in Design,” for the Carnegie Bosch Institute, Advanced Program for Technical Managers, 12 class contact hours: August 1992.

3. “Design for Manufacture,” for the Carnegie Bosch Institute, Advanced Program for Technical Managers, 12 class contact hours: August 1993.

4. “TQM and Design for Manufacture,” for the Korean/GSIA Management Institute, Program for Technical Managers, 9 class contact hours: August 1995.

5. “Excellence in Manufacturing,” for the Executive Education Network (EXEN) with CMU Graduate School of Industrial Administration, 3 class hours by direct satellite, with 2-way audio interaction. February 1996.

6. “Management of Technological Information,” for the Executive Education Network (EXEN) with CMU Graduate School of Industrial Administration, 3 class hours by direct satellite, with 2-way audio interaction. March 1996.

7. “Excellence in Manufacturing,” for the Executive Education Network (EXEN) with CMU Graduate School of Industrial Administration, 3 class hours by direct satellite, with 2-way audio interaction. April 1997.

8. "Design For Assembly Workshop: Theory and Practice," for Long-Airdox Company, one day session, Blacksburg, Virginia, June, 1999

9. "Value Analysis Workshop: 8-16 UniHauler," for Long-Airdox Company, eight weekly 4-hour sessions, Blacksburg, Virginia, Aug.-Sept., 2000

10. “Design for Manufacture and Assembly,” for ABB, Ltd. one day sessions presented at Pine Tops, NC; Brno, Czech Rep.; Ratingen, Germany; Nashik, India; Cairo, Egypt; Sao Paulo, Brasil. 2004 - 2005

Seminars:

1. "Design for Assembly Methods," CMU Robotics Institute Colloquium, August, 1985.

2. “Robotic Dexterity,” Ben Franklin Institute, May, 1986.

3. “Human and Machine Dexterity,” CMU Mechanical Engineering Department Graduate Seminar, October, 1986.

4. “Design for Producibility.” METAC Symposium, January, 1989.

5. “Dexterity for Automated Assembly,” Ohio State University Mechanical Engineering Graduate Seminar Series, invited speaker, Nov 1989.

6. “Workholding and Design for Manufacture,” CMU Robotics Institute, April, 1990.

7. “Design For Assembly: Theory and Practice,” Ohio State University Mechanical Engineering Graduate Seminar Series, invited speaker, May 1990.

8. “Design for Manufacture,” Lord Corporation, Erie, PA, November, 1990.

9. “A Flexible Tendon-Controlled Device for Endoscopy,” CMU Robotics Institute, March, 1991.

10. “Functional Process Planning for DfM,” CMU Robotics Institute, October, 1991.

11. “Information Content in Design for Manufacture,” CMU Engineering Design Research Center Seminar Series, November, 1991.

12. “Design for SMED in Sheet Metal Fabrication,” CMU Engineering Design Research Center Seminar Series, March 5, 1992.

13. “Design for Manufacture,” CMU Post College Professional Education Program for Technical Managers, March 20, 1992.

14. “Single-Minute Bending Set-Ups with a Vernier Punch and Die Set,” CMU Robotics Institute, March 31, 1992.

15. “Design for Manufacture: Is There Any Other Way?” CMU College of Fine Arts Seminar Series, April 20, 1992.

16. “Applications of Symmetry to Sheet Metal Part Design and Manufacture,” CMU Robotics Institute, June 23, 1992.

17. “Getting the Design Process Started,” CMU Engineering Design Research Center Seminar Series, June 24, 1992.

18. “Flexible Assembly Systems,” for the EC Researchers, EC/US Collaboration on Advanced Manufacturing, at EDRC, October 27, 1992.

19. "An Advisor for Designing a Process and a Process for Designing an Advisor," CMU Engineering Design Research Center Seminar Series, DfM Lab, 9 Feb 1993.

20. “Passive Assembly,” CMU Mechanical Engineering Department Graduate Seminar, November, 1993.

21. “Design For Assembly: Product and Process,” Ohio State University Mechanical Engineering Graduate Seminar Series, invited speaker, April 1994.

22. “Automating the Planning of Sheet Metal Products,” CMU Robotics Institute, May 23, 1994.

23. “Assembly Strategy 2000,” EARN Program Speaker, 25 May, 1994. Also presented at the Production Engineering Research Labs of Hitachi, Ltd., Himeji, Japan, 18 July 1994.

24. “Design for Manufacture: Myths and Realities,” CMU Mechanical Engineering Department Graduate Seminar, April, 1995.

25. “Passive Assembly,” University of Pittsburgh Mechanical Engineering Department Graduate Seminar, October, 1995.

26. "Getting it All Together: Modern Manual and Machine Assembly Measurement," SPQA, Virginia Forum for Excellence, Workshop 6, April 29, 1998, Richmond, VA.

27. “Modern Optimization Methods in Design,” invited seminars at KMIT, Thonburi, and KMUT, Ladkrabang, Bangkok, Thailand, 2006.

28. “Collaborative Automotive Design” for International Co-op program with IESTM, Monterrey Mexico, Fall 2007.

29. "Robotic Safety Considerations" for ASSE, Roanoke, VA, 5 March 2010.

30. "The Next Killer App" for ISE Department, VT, 21 October 2011.

Videotape Productions:

"Design for Manufacture," 10:00, June 1986.
"Design for Assembly Calculator," 16:15, July 1986.
"Voice-controlled Flexible Endoscope," 2:35, June 1989.
"Smart Endoscope Development at CMU," 4:25, Feb 1991.
"Model Mail Culler Demonstration," 3:32, April, 1991.
"24-101 Introduction," 11:00, August, 1991.
"24-101 Lecture Series," approx 6 hours, April 1992.
"Spatial Remote Center Compliance," 4:10, September 1992.
"24-101 Live Steam Challenge," Part I, 4:02, October 1992.
"24-101 Live Steam Challenge '92," Part II, 3:50, December 1992.
"Passive Assembly," 10:30, November, 1993.
"Flexible Gripper for Sheetmetal Handling," 2:50, December, 1994.
"Rational VHS Cassette Design," 5:00, April 1995.
"Passive Assembly of Multiple Pegs and Screws," 4:00, July, 1996.
"This is ISE Manufacturing," 35:20, August, 2000
"Shop Hobbing," 18:10, September 2008
"Sea-State Simulator Platform" 4:00, October 2010
"TruTrac Model Operation" 18:00, February 2012

B. *Government Committees:*

1. "NSF Workshop on Computer Assisted Surgery," 28 Feb - 2 Mar 1993, Wash. DC, Plenary Session Speaker.
2. NSF DDM Proposal Review Panel, April 27-28, 1993, Wash. DC.
3. NSF DMII Proposal Review Panel, April 25-26, 1995, Wash. DC.
4. NSF IIS Proposal Review Panel, September 1998, remote.

C. *Memberships:*
Sigma Xi, Member.
ASME, Member
IIE, Member
Westinghouse Engineer's Society, President 1978.

D. *Editorial Roles:*
Reviewed Papers for:

Advances in Engineering Software
AI EDAM
ASME Design Theory & Methodology Conferences
ASME Japan-USA Conf. on Flexible Automation
ASME Journal of Engineering for Industry
ASME Journal of Engineering Materials and Technology
ASME Journal of Mechanical Design
ASME Manufacturing Review

Computing Systems in Engineering
FAIM Transactions
IEEE Control Systems Society
IEEE Expert
IEEE International Robotics and Automation Conferences
IEEE Trans. on Control Systems Technology
International Journal of Robotics Research
Journal of Computer Aided Design
Mechatronics
International Journal of Solids and Structures
Journal of Engineering Design

E. *Professional Awards:*

Professional Engineer, Commonwealth of Pennsylvania, certificate number PE-041434-E, Jan 1991.

"1990 George Talman Ladd Award," recognizing excellence in research for a young faculty member, Carnegie Mellon University.

"1990 Presidential Young Investigator," National Science Foundation.

"B.G. Lamme Fellowship," Westinghouse Electric Corp., 1984.

"Silver Signature Award," Westinghouse Electric Corp., 1983, for the development of the Wire Harness Flexible Manufacturing System.

"Engineering Achievement Award," Westinghouse Productivity and Quality Center, Oakdale, PA, 1982, for the development of the Mobile Interactive Terminal.

"Dean's Teaching Excellence Award," Virginia Tech, April 2005.

F. *Service/Committees:*

CMU:
Manufacturing Strategy Task Force (1988-91)
Xerox CMU Challenge TQM Program (June 1992)
Interdisciplinary Design MS Program Planning Committee (1992)
Faculty Development Committee (1992-93)
MSMEM Degree Program Development (1992-93)
Multidisciplinary MS Design Program Development (1992)
ESL Oral Examinations Workshop (1994)
Carnegie Institute of Technology, Mechanical Engineering:
Departmental Undergraduate Committee (1988-89)
Departmental Seminar Program Coordinator (1988-89)
Departmental Graduate Committee, Graduate Applications Coordinator (1989-90), Design Curriculum Subcommittee

Coordinator (1990, 1991), Qualifying Exam Coord (93)
Departmental Faculty Search Committee (1989-90, etc.)
Departmental Freshman Course Committee (1990-91, 94-95)
Departmental Undergraduate Committee (1993-95)

VPI&SU, Industrial & Systems Engineering:
Awards Committee (1997-2004)
Undergraduate Honor Board Panelist (2000-2008)
Graduate Honor Board Panelist (2007-2008)
AdHoc P&T Committee (2004-2005)
VPI&SU, Mechanical Engineering:
Formula SAE Team Advisor (1998-2000)
Graduate Program Committee (1999-2001)
VPI&SU, College/University:
Engineering Faculty Organization, member (1998-present)
Engineering Faculty Organization, Chair (2001-present)
College of Engineering Commencement Committee, General Marshall
College of Engineering Green Engineering Program Steering Committee
College of Engineering Undergraduate Curriculum Committee
Commission on Undergraduate Curriculum
Commission on Undergraduate Studies And Policies
Intellectual Property Committee

IEEE: Session Chair "Integration and CAD/CAM," *Third Int'l Conf. on Computer Integrated Manufacturing,* RPI, Troy, NY, May 1992.

ASME:

1. Session Chair, "Machining and Manufacturing Processes," *ASME 18th Design Automation Conference,* Scottsdale, AZ, Sept. 15, 1992
2. Panelist, "Research Opportunities in Flexible Assembly," *ASME 18th Design Automation Conference,* Scottsdale, AZ, Sept. 14, 1992
3. Session Chair, "Concurrent Engineering," *ASME 19th Design Automation Conference,* Albuquerque, NM, Sept. 20, 1993
4. Program Committee, *Japan-USA Symposium on Flexible Automation,* Boston, MA, July, 1996.
5. ASME Student Design Contest Committee, 1997-2000.
6. Program Committee, and Session Chair,*3rd ASME-DFM Conference,* Atlanta, GA, Sept. 13-16, 1998.
7. Conference Chair, *4th ASME-DFM Conference,* Las Vegas, NV, Sept. 12-14, 1999.
8. Program Committee, and Session Chair, *5th ASME-DFM Conference,* Baltimore, MD, Sept. 11-13, 2000.
9. ASME DFM Committee, Vice Chair, 1999-2001
10. Program Committee, *Japan-USA Symposium on Flexible Automation,* Denver CO,, July, 2004.
11. Session Chair CAD' 04 International CAD Conferences and Exhibitions, May 24-28, 2004. Pattaya, Thailand

12. Session Chair CAD' 06 International CAD Conferences and Exhibitions, Jun 19-23, 2006. Phuket, Thailand

SME: Student Section Advisor, 2007-2009, 2009,-2011

Other:

"NSF Workshop on Computer Assisted Surgery," 28 Feb - 2 Mar 1993, Wash., DC. Plenary Session Speaker.

"First Int'l Symposium on Medical Robotics and Computer Assisted Surgery," Pittsburgh, PA, 22-24 Sept 1994, Program Committee.

Mentor in "The LiNC Project": a joint research effort on behalf of the National Science Foundation Networking Infrastructure for Education program between Virginia Tech and Montgomery County Public Schools, Spring 1999.

Mentor for International Co-op program with IESTM, Monterrey Mexico, Fall 2007, Spring 2008.

Mentor for student team in the Roanoke Valley Governor's School, project on "Hyper-miling" any late-model car with an OB2 connector and an iPod. Fall 2010.

Panelist for AAAS proposals, 2105.

Exhibit B

Robert H. Sturges, Jr., Ph.D., PE

Litigation Support Experience

Expert Engagement:
Type of Matter: Patent
Law Firm: Reed Smith
Case Name: Vamco v. Sankyo
Services Provided: Hired by Vamco, expert report, depositions, testimony
Disposition: Judgment in favor of Vamco
Date: February 1991

Expert Engagement:
Type of Matter: Patent
Law Firm: Buchanan Ingersoll
Case Name: TDC Electronics v. Toll Partners, Inc.
Services Provided: Hired by Toll Partners, expert report, depositions, testimony
Disposition: Judgment (3x) in favor of Toll Partners
Date: August 1992

Expert Engagement:
Type of Matter: Trade Secret
Law Firm: Buchanan Ingersoll
Case Name: Hauser v. RACO
Services Provided: Hired by Hauser, expert report, depositions, testimony
Disposition: Judgment in favor of Hauser
Date: October 1992

Expert Engagement:
Type of Matter: Patent
Law Firm: Reed Smith
Case Name: McClain v. KNI
Services Provided: Hired by KNI, expert report, depositions, demonstratives, testimony
Disposition: Judgment in favor of KNI
Date: June 1994

Expert Engagement:
Type of Matter: Patent
Law Firm: Buchanan Ingersoll
Case Name: Stnd Car Truck v. A. Stucki Co.
Services Provided: Hired by A. Stucki Co, expert report, depositions, demonstratives, testimony
Disposition: Judgment in favor of Stucki
Date: Aug 1995

Robert H. Sturges, Jr., Ph.D., PE

Expert Engagement:

Type of Matter:	Patent
Law Firm:	Cleary Gottlieb
Case Name:	Ricoh Co v. ICMI/Nashua
Services Provided:	Hired by Ricoh, expert report, depositions, testimony
Disposition:	Judgment in favor of Ricoh
Date:	May 1996

Expert Engagement:

Type of Matter:	Patent
Law Firm:	Buchanan Ingersoll
Case Name:	Ductmate v. Mez
Services Provided:	Hired by Ductmate, expert report, depositions, testimony
Disposition:	Judgment in favor of Ductmate
Date:	May 1996

Expert Engagement:

Type of Matter:	Patent
Law Firm:	N/A
Case Name:	II-VI Corp. v. Raiskin
Services Provided:	Hired by II-IV Corp, expert report, depositions, testimony
Disposition:	Judgment in favor of II-VI
Date:	Jan 1996

Expert Engagement:

Type of Matter:	Patent
Law Firm:	Merchant & Gould
Case Name:	Century v. Chevron
Services Provided:	Hired by Chevron, expert report, depositions, testimony
Disposition:	Judgment in favor of Chevron
Date:	March 1996

Expert Engagement:

Type of Matter:	Accident
Law Firm:	Buchanan Ingersoll
Case Name:	Kennedy v. Shadyside Hospital
Services Provided:	Hired by Shadyside Hospital, expert report, depositions
Disposition:	Settled in favor of Shadyside Hospital
Date:	Sept 1996

Robert H. Sturges, Jr., Ph.D., PE

Expert Engagement:

Type of Matter:	Patent
Law Firm:	Buchanan Ingersoll
Case Name:	AGR
Services Provided:	Hired by Buchanan Ingersoll, written opinion
Disposition:	---
Date:	Sept 2001

Expert Engagement:

Type of Matter:	Patent
Law Firm:	Buchanan Ingersoll
Case Name:	Electrogrip v. MEC
Services Provided:	Hired by MEC, expert report, deposition
Disposition:	Settled
Date:	Aug 1998

Expert Engagement:

Type of Matter:	Patent
Law Firm:	Kane Dalsimer
Case Name:	Daktronics v. Trans-lux
Services Provided:	Hired by Trans-lux, expert report, depositions
Disposition:	Settled
Date:	October 1999

Expert Engagement:

Type of Matter:	Patent
Law Firm:	Kane Dalsimer
Case Name:	Kirsh v. Brother, Int'l
Services Provided:	Hired by Brother Int'l, expert report, depositions, testimony
Disposition:	Settled
Date:	June 1999

Expert Engagement:

Type of Matter:	Trade Secret
Law Firm:	N/A, FTI Consulting
Case Name:	Memtec v. Puroflow
Services Provided:	Hired by Memtech, expert report, depositions, testimony
Disposition:	Judgment in favor of Puroflow
Date:	February 1999

Expert Engagement:
Type of Matter: Patent
Law Firm: Myers Bigel
Case Name: Tee-Lok v. MiTek
Services Provided: Hired by Tee-Lok, expert report, depositions, testimony
Disposition: Judgment in favor of MiTek
Date: August 1999

Expert Engagement:
Type of Matter: Patent
Law Firm: Lewis Rice
Case Name: Engle v. Systemation
Services Provided: Hired by Engle, expert report, depositions, testimony
Disposition: Judgment in favor of Engle
Date: 2000

Expert Engagement:
Type of Matter: Patent
Law Firm: Buchanan Ingersoll
Case Name: GETS v. Wabtech
Services Provided: Hired by Wabtech, expert report, depositions, testimony
Disposition: Judgment in favor of Wabtech
Date: May 2003

Expert Engagement:
Type of Matter: Patent
Law Firm: Lewis Rice
Case Name: TruFitness v. Precor
Services Provided: Hired by TruFitness, expert report, depositions, testimony
Disposition: Judgment in favor of TrueFitness
Date: Jan 2001

Expert Engagement:
Type of Matter: Patent
Law Firm: Lewis Rice
Case Name: SRAM v. AD-II
Services Provided: Hired by SRAM, expert report, depositions, testimony
Disposition: Judgment in favor of SRAM
Date: Jan 2002

Expert Engagement:
Type of Matter: Patent
Law Firm: Pillsbury Winthrop
Case Name: Kirsch v. TABS
Services Provided: Hired by TABS, expert report, depositions, testimony
Disposition: Judgment in favor of TABS
Date: Feb 2006

Expert Engagement:
Type of Matter: Patent
Law Firm: Stradling Yocca
Case Name: Intuitive v. Computer Motion
Services Provided: Hired by Computer Motion, expert report, depositions, testimony
Disposition: Settled: buyout of Computer Motion by Intuitive
Date: May 2003

Expert Engagement:
Type of Matter: Patent
Law Firm: Moss & Rocovich
Case Name: Musser v. Group7
Services Provided: Hired by Musser, expert report, depositions, testimony
Disposition: Judgment in favor of Musser
Date: March 2004

Expert Engagement:
Type of Matter: Patent
Law Firm: Reed Smith
Case Name: Medrad v. Liebel-Flarsheim
Services Provided: Hired by Medrad, expert report, depositions, testimony
Disposition: Judgment in favor of Medrad (historic)
Date: March 2005

Expert Engagement:
Type of Matter: Patent
Law Firm: Buchanan Ingersoll
Case Name: Newell v. Intercrown
Services Provided: Hired by Intercrown, expert report, deposition
Disposition: Settled
Date: Aug 2010

Expert Engagement:
Type of Matter: Contract/Technical
Law Firm: N/A
Case Name: Morrill Motors v. Lamb Technicon
Services Provided: Hired by Lamb Technicon, expert report, depositions, testimony
Disposition: Settled in favor of Lamb Technicon
Date: March 2005

Expert Engagement:
Type of Matter: Patent
Law Firm: Oblon Spivak
Case Name: Ricoh v Katun
Services Provided: Hired by Ricoh, expert reports, depositions
Disposition: Settled
Date: June 2007?

Expert Engagement:
Type of Matter: Patent
Law Firm: Oblon Spivak
Case Name: NPI v. Gamber-Johnson
Services Provided: Hired by Gamber-Johnson, expert report, deposition
Disposition: Settled
Date: June 2006

Expert Engagement:
Type of Matter: Patent
Law Firm: Myers Bigel
Case Name: Avitech v. Embrex
Services Provided: Hired by Embrex, expert report, depositions, testimony
Disposition: Settled in favor of Embrex
Date: ?

Expert Engagement:
Type of Matter: Patent
Law Firm: Vorys Sater Seymour & Pease
Case Name: Kendall Holdings v. Eden Cryogenics, LLC
Services Provided: Hired by Kendall, expert report, court testimony
Date: 2008-11

Expert Engagement:
Type of Matter: Patent
Law Firm: Banner & Witcoff
Case Name: Sure Bros. v. N/A
Services Provided: Hired by Sure Bros., expert report
Disposition: Settled

Date: Feb 2008

Expert Engagement:
Type of Matter: Patent
Law Firm: Polsinelli
Case Name: Dentsply v. Forestadent
Services Provided: Hired by Dentsply, expert report, depositions, testimony
Disposition: Judgment in favor of Forestadent
Date: Feb 2010

Expert Engagement:
Type of Matter: Trade Secret
Law Firm: Vorys Sater
Case Name: Kendall Holdings v. Eden Cryogenics
Services Provided: Hired by Kendall, expert report, depositions, testimony
Disposition: Jury in favor of Kendall
Date: Oct 2013

Expert Engagement:
Type of Matter: Patent
Law Firm: Thompson Hine
Case Name: Hyko v. Hillman
Services Provided: Hired by Hyko, expert report, depositions, testimony
Disposition: Judgment in favor of Hyko
Date: June 2012

Expert Engagement:
Type of Matter: Patent, ITC
Law Firm: Fitzpatrick Cella
Case Name: Canon KK v. Multiple Defendants
Services Provided: Hired by Canon KK, expert report, depositions, testimony
Disposition: Judgment in favor of Canon KK
Date: August 2012

Expert Engagement:
Type of Matter: Patent
Law Firm: McDermott Will & Emory
Case Name: Lincoln Electric v. National Standard
Services Provided: Hired by National Standard, expert report, depositions, testimony
Disposition: Settled in favor of National Standard
Date: July 2012

Expert Engagement:
Type of Matter: Patent
Law Firm: Hayes Boone
Case Name: Imaginal v. Legget & Platt

Services Provided: Hired by Legget & Platt, expert report, depositions, testimony
Disposition: Settled in favor of Legget & Platt
Date: Aug 2012

Expert Engagement:
Type of Matter: Patent
Law Firm: Orrick
Case Name: Imaginal v. Legget & Platt
Services Provided: Hired by Legget & Platt, expert report, depositions, testimony
Disposition: Settled in favor of Legget & Platt
Date: Oct 2014

Expert Engagement:
Type of Matter: Patent, IPR
Law Firm: Fitzpatrick Cella
Case Name: Canon KK v. General Plastic
Services Provided: Hired by Canon KK, expert report, deposition
Disposition: Jury held for Canon
Date: 20 June 2017

Expert Engagement:
Type of Matter: Patent
Law Firm: Boies Schiller
Case Name: ROY-G-BIV v. ABB
Services Provided: Hired by ROY-G-BIV, expert report, depositions
Disposition: Settled, ROY-G-BIV patents held valid in landmark AIA case
Date: Sept 2014

Expert Engagement:
Type of Matter: Patent
Law Firm: Beck Thomas
Case Name: Ductmate Ind. v. Famous Distr.
Services Provided: Hired by Ductmate, expert report, declarations
Disposition: Settled in favor of Ductmate
Date: Nov 2014

Expert Engagement:
Type of Matter: Patent
Law Firm: McCarter English
Case Name: OncQue v KAZ
Services Provided: Hired by OncQue, expert report
Disposition: Settled
Date: November 2015

Expert Engagement:

Type of Matter: Patent
Law Firm: Dickstein Shapiro/ Blank Rome
Case Name: Murata v. Daifuku
Services Provided: Hired by Daifuku, expert report, depositions, IPR
Disposition: Settled
Date: Sept 2016

Expert Engagement:
Type of Matter: Patent
Law Firm: Munck Wilson Mandala
Case Name: Nintendo v iLife
Services Provided: Hired by iLife, expert report, depositions
Disposition: settled
Date: --

Expert Engagement:
Type of Matter: Patent
Law Firm: Greenberg Traurig
Case Name: Megdal v La-Z-Boy
Services Provided: Hired by La-Z-Boy, expert report, court testimony
Disposition: ---
Date: 6 March 2016

Expert Engagement:
Type of Matter: Patent
Law Firm: Brinks Gilson
Case Name: Fontem v RJReynolds Vapor
Services Provided: Hired by RJReynolds, IPR expert reports, depositions
Disposition: ongoing
Date: June 2016

Expert Engagement:
Type of Matter: Patent
Law Firm: Mintz Levin
Case Name: Medigus v Endochoice
Services Provided: Hired by Medigus, expert consulting
Disposition: Defendants defaulted
Date: 2 Nov 2016

Expert Engagement:
Type of Matter: Patent
Law Firm: Alston & Bird
Case Name: Hyosung v Diebold
Services Provided: Hired by Diebold, expert report, court testimony

Disposition: Hearing Completed
Date: 4 Nov. 2016

Expert Engagement:
Type of Matter: Patent
Law Firm: Lewis-Rice
Case Name: Fox Factory v SRAM; SRAM v Fox Factory
Services Provided: Hired by SRAM, expert reports, depositions
Disposition: On going
Date: Nov. 2016

Expert Engagement:
Type of Matter: Patent
Law Firm: Bragalone Conroy
Case Name: AMS/Wi-LAN v Multiple Defs
Services Provided: Hired by AMS, technical support
Disposition: On going
Date: April 2016

Expert Engagement:
Type of Matter: Patent
Law Firm: Foley & Lardner
Case Name: Honeywell v Research Products Corp
Services Provided: Hired by RPC, technical support
Disposition: On going
Date: Feb. 2018

Additional Litigation Consulting Experience

- Emery Tree Services, Inc., Pittsburgh, PA: Intellectual property, device analysis
- Baxter Healthcare, Chicago, IL: Manufacturing Process Analysis
- AGR International, Inc., Pittsburgh, PA: Intellectual property, device analysis
- U.S. Filter, Inc., Orlando, FL: Intellectual property, device analysis
- Enviro Tek, Inc., Waterford, VA: Process design and analysis
- Bear Archery, Inc., Orlando, FL: Manufacturing/Tolerance analysis
- Westinghouse AirBrake Company, Pittsburgh, PA: Intellectual property, device analysis
- Marvin Windows, Inc.: Intellectual property, device analysis
- Musser Lumber, Inc., device analysis.
- Excel Products, Inc.: Intellectual property, device analysis
- Simmons Co.: Intellectual property, device analysis

Additional Consulting Experience

- Rockwell International Corp., Raleigh, NC: Engine valve line welding robot design and controls
- W G Products, 7875 Saltsburg Rd., Pittsburgh, PA: Magnetic field/structure analysis for high current circuit breakers
- Westinghouse Electric Corp., Pittsburgh, PA: Robotic handling system design for Savannah River Laboratory,
- Hall Industries, Inc., Pittsburgh, PA: Electromechanical system design, manufacturing process controls
- Lord Corp, Aerospace Products Division, Erie, PA: Design for manufacture
- American Carbon & Metals Corp., Pittsburgh, PA: Design, device analysis
- Sensus Technologies, Inc., Uniontown, PA: Automatic assembly system analysis