UNITED STATES PATENT AND TRADEMARK OFFICE

BEFORE THE PATENT TRIAL AND APPEAL BOARD

R.J. REYNOLDS VAPOR COMPANY,

Petitioner

v.

FONTEM HOLDINGS 1 B.V.,

Patent Owner

U.S. Patent 8,893,726
Issue Date: Aug. 10, 2010
Title: Electronic Cigarette

Inter Partes Review No. 2016-01270

DECLARATION OF DR. ROBERT H. STURGES
REGARDING U.S. PATENT NO. 8,893,726

ECTO WORLD-SV3 EX1016
U.S. Patent No. 11,925,202

TABLE OF CONTENTS

Page

I. INTRODUCTION 1

A. Engagement 1

B. Background and Qualifications 1

C. Compensation and Prior Testimony 2

D. Information Considered 3

II. LEGAL STANDARDS FOR PATENTABILITY 3

III. OVERVIEW AND BACKGROUND OF THE 726 PATENT 9

A. Overview of the 726 Patent (Ex. 1001) 9

B. Person of Ordinary Skill in the Art 12

IV. CLAIM CONSTRUCTION 13

A. "electronic cigarette" 14

B. "atomizer" 15

C. "liquid storage body including fiber material" 16

D. " physical contact" 16

V. DESCRIPTION OF THE PRIOR ART THAT FORMS THE BASIS FOR UNPATENTABILITY 16

A. U.S. Patent No. 4,947,874 ("Brooks") (Ex. 1006) 16

B. U.S. Patent No. 5,944,025 ("Cook") (Ex. 1007) 22

C. U.S. Patent No. 6,155,268 ("Takeuchi") (Ex. 1008) 23

VI. CLAIMS 15 AND 16 OF THE 726 PATENT ARE ANTICIPATED BY BROOKS 27

A. Claim 15 27

1. " electronic cigarette" 27

2. "a housing having an inlet and an outlet" 29

3. "an electronic circuit board and an atomizer having a heating element, within the housing" 29

4. "a battery electrically connected to the electronic circuit board" 30

5. "a stream passage within the housing leading from the inlet to the atomizer" 30

6. "a liquid storage body including fiber material in a cylindrical section of the housing, with the liquid storage body in physical contact with the atomizer" 31

7. "an aerosol passage from the atomizer to the outlet" 33

B. Claim 16 34

VII. CLAIMS 15 AND 16 OF THE 726 PATENT ARE OBVIOUS 45

VIII. CONCLUSION 55

I. INTRODUCTION

A. Engagement

1. I have been retained by the law firm of Brinks Gilson & Lione on behalf of R.J. Reynolds Vapor Company to provide this Declaration concerning the technical subject matter relevant to the inter partes review petition concerning U.S. Patent No. 8,893,726 ("the 726 patent", Ex. 1001).1 I have been asked to render an opinion regarding the validity of claims 15 and 16 (the "challenged claims").

B. Background and Qualifications

2. I am currently a Professor in the Departments of Mechanical and Industrial Systems Engineering at Virginia Polytechnic Institute ("Virginia Tech"). From 1987 to 1997, I was first an Assistant Professor and then later an Associate Professor in the Mechanical Engineering Department at Carnegie Mellon University. I have a combined Bachelor of Science and Master of Science degree in mechanical engineering from M.I.T. and a Ph.D. in mechanical engineering from Carnegie Mellon University.

3. In my past work, I have extensively studied and designed various fluid power systems, including a robotic arm and robotic end effectors. In the latter, I

---

[1] I refer to exhibit numbers that correspond to those I understand will be submitted with the Petition for *Inter Partes* Review.

applied fluid "resistors" that rely on porous media to provide resistance to flow. I have also applied heat transfer fundamentals to design and build variations of commercial steam engines used in my undergraduate labs at Carnegie Mellon University and my graduate course in Sustainability at Virginia Tech. In addition, I have taught undergraduate courses focused on fundamental mechanics and the conservation of energy, including basic principles of fluid flow and heat transfer, as described in textbooks such as Mark's Standard Handbook for Mechanical Engineers and Heat, Mass and Momentum Transfer by Rohsenow & Choi.

4. Based on my background, experience, education and professional activities, I consider myself an expert in the fields of mechanical design, mechatronics, and manufacturing, including systems that employ heat, mass and fluid transfer.

5. My Curriculum Vitae, including my publications and patents, is submitted herewith in Appendix A.

C. Compensation and Prior Testimony

6. I am being compensated at a rate of $400 per hour for my study and time in this matter. I am also being reimbursed for reasonable and customary expenses associated with my work and time in this investigation. My compensation is not contingent on the outcome of this matter or the specifics of my testimony.

7. The list submitted herewith in Appendix B identifies my past expert engagements.

D. Information Considered

8. My opinions are based on my years of education, research, and experience, as well as my investigation and study of relevant materials. In forming my opinions, I have considered the 726 patent and its prosecution history and the decision in a prior proceeding involving the 726 patent (IPR2015-01302), in addition to the materials referred to herein.

9. I may rely upon these materials and/or additional materials to rebut arguments raised by the patent owner. Further, I may consider additional documents and information in forming any necessary opinions – including documents that may not yet have been provided to me.

10. I reserve the right to supplement this Declaration in response to additional evidence that may come to light.

II. LEGAL STANDARDS FOR PATENTABILITY

11. In expressing my opinions and considering the subject matter of the claims of the 726 patent, I am relying upon certain basic legal principles that counsel has explained to me.

12. It is my understanding that, to anticipate a claim under 35 U.S.C. § 102, a prior art reference must teach every limitation of the claim.

13. It is also my understanding that a claimed invention is unpatentable under 35 U.S.C. § 103 as obvious if the differences between the invention and the prior art are such that the subject matter as a whole would have been obvious at the time the invention was made to a person having ordinary skill in the art to which the subject matter pertains. I also understand that the obviousness analysis takes into account factual inquiries including the level of ordinary skill in the art, the scope and content of the prior art, and the differences between the prior art and the claimed subject matter. I understand that a patent claim may be invalid because it was obvious in view of the prior art. The requirements to prove obviousness are contained in 35 U.S.C. § 103(a), which is reproduced in pertinent part below:

> A patent may not be obtained though the invention is not identically disclosed or described as set forth in section 102 of this title, if the differences between the subject matter sought to be patented and the prior art are such that the subject matter as a whole would have been obvious at the time the invention was made to a person having ordinary skill in the art to which said subject matter pertains. Patentability shall not be negatived by the manner in which the invention was made.

35 U.S.C. § 103(a).

14. I understand that multiple references may, in some circumstances, be combined to render a patent claim obvious. Possible sources for a reason, suggestion, or motivation to combine references include:

- the nature of the problem to be solved;
- the teachings of the prior art; and
- the knowledge of persons of ordinary skill in the art.

15. I have further been advised that the following factors may support a conclusion of obviousness:

- Combining prior art elements according to known methods to yield predictable results;
- Simple substitution of one known element for another to obtain predictable results;
- Use of a known technique to improve similar devices (methods, or products) in the same way;
- Applying a known technique to a known device (method, or product) ready for improvement to yield predictable results;
- "Obvious to try" - choosing from a finite number of identified, predictable solutions, with a reasonable expectation of success;
- Known work in one field of endeavor may prompt variations of it for use in either the same field or a different one based on design

incentives or other market forces if the variations are predictable to one of ordinary skill in the art; and

- Some teaching, suggestion, or motivation in the prior art that would have led one of ordinary skill to modify the prior art reference or to combine prior art reference teachings to arrive at the claimed invention.

16. In determining whether or not a patented invention would have been obvious, I understand that the following factors should be considered:

- The scope and content of the prior art;
- The differences between the prior art and the claims at issue;
- The level of ordinary skill in the art; and
- Any evidence of secondary considerations.

17. I understand that combining familiar elements according to known methods is likely to be obvious when it does no more than yield predictable results. Further, if a technique has been used to improve one device, and a person of ordinary skill in the art would recognize that it would improve similar devices in the same way, using the technique is obvious unless its actual applications is beyond his or her skill.

18. I understand that where the claimed invention involves more than the simple substitution of one known element for another, or the mere application of a

known technique to a piece of prior art ready for the improvement, it often will be necessary to look to interrelated teachings of multiple patents; the effects of demands known to the design community or present in the marketplace; and the background knowledge possessed by a person having ordinary skill in the art; all in order to determine whether there was an apparent reason to combine the known elements in the fashion claimed. Even in such a case however, the analysis need not seek out precise teachings directed to the specific subject matter of the challenged claim; rather, the inferences and creative steps that a person of ordinary skill would employ can be taken into account.

19. I also understand that obviousness is proven where there existed at the time of the claimed invention a known problem for which there was an obvious solution encompassed by the patent's claims. It is not relevant whether the combination was obvious to the inventor, but rather whether it would have been obvious to the person of ordinary skill, and under the correct analysis, any need or problem known in the field, which is addressed by the claimed subject matter, can provide a reason for combining the elements in the manner claimed.

20. I understand that design incentives and other market forces can prompt the combining of different works, either in the same field or a different field and a person of ordinary skill in the art would recognize the value of improvements obtained by combining unless its actual application of the works is

beyond his or her skill. Familiar items may have obvious uses beyond their primary purposes, and in many cases a person of ordinary skill will be able to fit the teachings of multiple patents together like pieces of a puzzle.

21. I understand that one of ordinary skill in the art would have been motivated to combine prior art references that disclose similar systems and improve upon them through modifications known to one of ordinary skill.

22. In determining obviousness, I understand that evidence of objective indicia of non-obviousness (also known as "secondary considerations") is also considered and that this is to be done before any ultimate determination of obviousness is made. I have been advised that the following factors may be considered as secondary considerations: (1) a long-felt and unmet need in the art for the invention; (2) failure of others to achieve the results of the invention; (3) commercial success of the invention; (4) copying of the invention by others in the field; (5) whether the invention was contrary to accepted wisdom of the prior art; (6) expression of disbelief or skepticism by those skilled in the art upon learning of the invention; (7) unexpected results; (8) praise of the invention by those in the field; and/or (9) commercial acquiescence (licensing).

23. I also understand that, in order for secondary considerations to be relevant to the issue of obviousness, a patentee must establish a nexus between such secondary considerations and the claimed invention. Stated one way, the

nexus requirement means that the secondary consideration is sufficiently derived from merits of the claimed invention, rather than other factors. I understand that if the patentee comes forward with a showing of one or more secondary considerations and the required nexus, then the burden of coming forward with evidence in rebuttal shifts to the party challenging the patent. Additionally, a party asserting invalidity may come forward with evidence of the absence of such secondary considerations or nexus. Further, it is my understanding that evidence of secondary considerations does not always overcome a strong showing of obviousness.

III. OVERVIEW AND BACKGROUND OF THE 726 PATENT

A. Overview of the 726 Patent (Ex. 1001)

24. The 726 patent is titled "Electronic Cigarette." The 726 patent describes a device having a shell 14 with a number of air inlets 4 provided on the external wall of the shell 14. Ex. 1001 at 2:36-37. In addition, "a LED 1, a cell 2, an electronic circuit board 3, a normal pressure cavity 5, a sensor 6, a vapor-liquid separator 7, an atomizer 9, a liquid-supplying bottle 11 and a mouthpiece 15 are sequentially provided within the shell 14." *Id.* at 2:37-40. All of these components are illustrated in the following figure (Fig. 1) from the 726 patent:

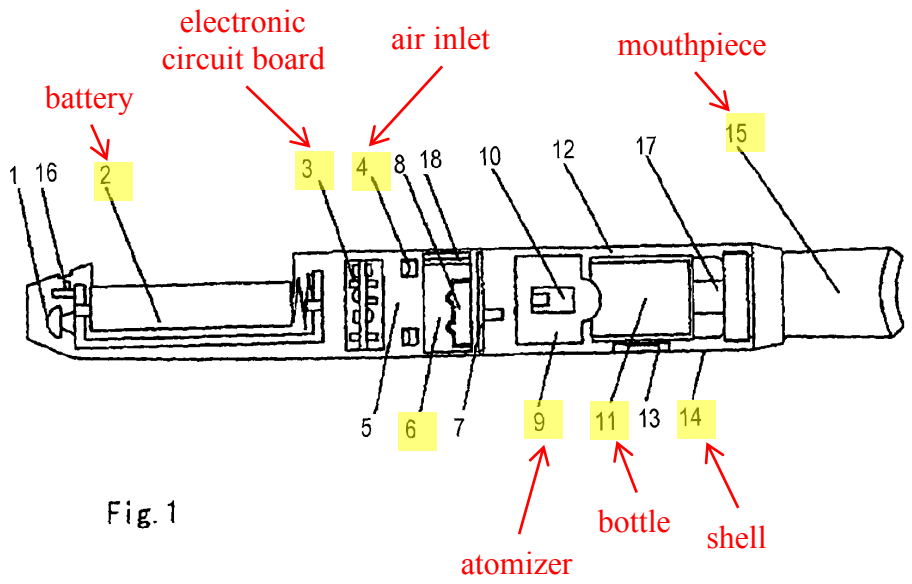

Fig. 1

25. As illustrated in Fig. 11, the 726 patent also describes that "a solution storage porous body 28 is provided in the liquid-supplying bottle [11], and can be filled with polypropylene fiber, terylene fiber or nylon fiber." *Id.* at 3:11-15; Fig. 11.

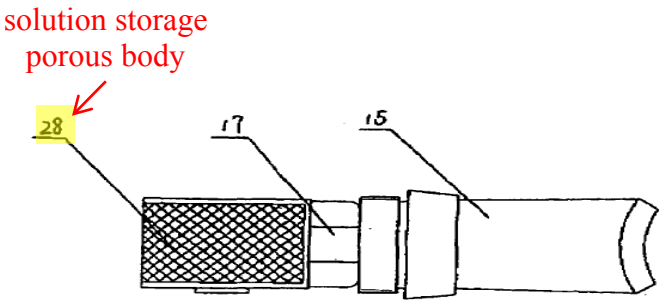

Fig. 11

The solution storage porous body 28 contacts a bulge 36 on the atomizer 9 so as to supply liquid nicotine solution to the atomizer. *Id.* at 3:64-67.

26. The 726 patent further describes that "[w]hen a smoker smokes, the mouthpiece 15 is under negative pressure." *Id.* at 3:33-34. As a result, "[a]ir

enters the normal pressure cavity 5 through the air inlet 4, passes through the air passage 18 of the sensor and then the through hole in the vapor-liquid separator 7, and flows into the atomization cavity 10 in the atomizer 9." *Id.* at 3:49-52. Airflow into the atomization cavity 10 drives a nicotine solution from a porous body that surrounds the atomization cavity into the atomization cavity. *Id.* at 3:52-59. In addition, the air pressure difference created between the normal pressure cavity 5 and the negative pressure cavity 8 causes the sensor 6 to output an actuating signal and the electronic circuit board 3 connected therewith to go into operation so as to turn on the heating element 26 of the atomizer 9. *Id.* at 3:27-43. After the atomization, "[d]roplets with small diameters float in stream and form aerosols, which are sucked out via the aerosol passage 12, gas vent 17 and mouthpiece 15." *Id.* at 3:59-64.

27. Claims 15 and 16 are the subject of my opinion. Claim 15 is an independent claim, and claims 16 depends from claim 15. I was asked to limit my analysis to these claims Claims 15 and 16 are reproduced below:

> 15. An electronic cigarette, comprising:
>
> a housing having an inlet and an outlet;
>
> an electronic circuit board and an atomizer having a heating element, within the housing;
>
> a battery electrically connected to the electronic circuit board;

a stream passage within the housing leading from the inlet to the atomizer;

a liquid storage body including fiber material in a cylindrical section of the housing, with the liquid storage body in physical contact with the atomizer; and

an aerosol passage from the atomizer to the outlet.

16. The electronic cigarette of claim 15 further including a sensor in the stream passage, with the sensor electrically linked to the electronic circuit board.

B. Person of Ordinary Skill in the Art

28. I understand that the 726 patent must be reviewed through the eyes of a person having ordinary skill in the art (i.e., a "PHOSITA"). I understand that a PHOSITA is a hypothetical person who is presumed to know the relevant prior art. I am advised that that factors that guide the determination of level of ordinary skill in the art may include: the education level of those working in the field, the sophistication of the technology, the types of problems encountered in the art, the prior art solutions to those problems, and the speed at which innovations are made may help establish the level of skill in the art.

29. It is my opinion that relevant and related art for the claims of the 726 patent include electromechanical devices with the ability to atomize liquids and deliver an aerosol to a user. Further, it is my opinion that a PHOSITA for the 726 patent is a person with at least the equivalent of a Bachelor's degree in electrical engineering, mechanical engineering, or biomedical engineering or related fields, along with at least 5 years of experience designing electromechanical devices, including those involving circuits, fluid mechanics and heat transfer. I base my opinions on my review of the 726 patent, the relevant prior art, and my background in designing and developing systems that apply heat transfer and fluid mechanics. For this petition only, I have been asked to assume the invention date for the 726 patent is April 14, 2004, and thus I have applied the perspective of the PHOSITA as of that date.

IV. CLAIM CONSTRUCTION

30. It is my understanding that, in an *inter partes* review proceeding, the terms of the challenged claims should be given their broadest reasonable interpretation, as understood by a PHOSITA and consistent with the disclosure of the 726 patent. I understand that, where a patent applicant provides an explicit definition of a claim term in the specification, that definition may control the interpretation of that term in the claim. I also understand that if no explicit definition is given to a term in the patent specification, the claim terms must be

evaluated using the ordinary meaning of the words being used in those claims. I also understand that the words in the claims are to be evaluated from the perspective of a PHOSITA.

31. In conducting my analysis, I have considered the terms used in claims 15 and 16 of the 726 patent and what they mean to the PHOSITA. .

A. "electronic cigarette"

32. The preamble language, which is the language before the word "comprising" is "an electronic cigarette." I understand that preamble language in a claim acts as a claim limitation if it recites essential structure or steps, or if it is "necessary to give life, meaning, and vitality" to the claim. I also understand that a preamble is not considered a claim limitation where a patentee defines a structurally complete invention in the claim body and uses the preamble only to state a purpose or intended use for the invention.

33. In claims 15 and 16, the preamble does not recite any essential structure necessary or important for the claimed invention. Instead, the body of the claim fully recites the structure. In that regard, none of the claim limitations in claims 15 and 16 recite or rely in any way on the preamble language for "an electronic cigarette." Rather, the claim fully recites the limitations that define the invention and the preamble is not necessary to understand the invention. Upon inspection, the preamble language is not found in the body of claims 15 and 16 or

any other claim depending from claim 15. Thus, it is my opinion that the preamble language for "an electronic cigarette" is not a claim limitation.

34. Moreover, I also understand that in the prior proceeding involving the 726 patent, the Board construed the term "electronic cigarette" as "a device for generating liquid droplets for inhalation by a user, where the device functions as a substitute for smoking, e.g., by providing nicotine without tar." Ex. 1005 at 8-9. Although in my opinion the preamble language for "an electronic cigarette" is not a claim limitation that requires construction, it is also my opinion that claims 15 and 16 are invalid even under the Board's prior construction of "electronic cigarette" for the reasons stated herein.

B. "atomizer"

35. I understand that the term "atomizer" in claim 15 was previously construed by the Board as "a part of the electronic cigarette that includes components that participate in facilitating atomization." Ex. 1005 at 9-10. Since in my opinion the preamble language for "an electronic cigarette" is not a claim limitation, it is my opinion that the broadest reasonable interpretation of "atomizer" is "structure for facilitating atomization." *Id.* at 2:52-3:10, 3:49-67, 4:11-24; Figs. 6-8.

C. "liquid storage body including fiber material"

36. With regard to the term "liquid storage body including fiber material" used in claim 15, it is my opinion that this term should be construed as written and no further construction is necessary under the broadest reasonable interpretation standard.

D. " physical contact"

37. I also understand that the term "physical contact" in claim 15 was previously construed by the Board as "direct contact." *Id.* at 10-11. I have applied this construction for purposes of my analysis.

V. DESCRIPTION OF THE PRIOR ART THAT FORMS THE BASIS FOR UNPATENTABILITY

A. U.S. Patent No. 4,947,874 ("Brooks") (Ex. 1006)

38. Brooks is titled "Smoking Articles Utilizing Electrical Energy." The invention of Brooks relates to "cigarettes and other smoking articles such as cigars, pipes, and the like, which employ an electrical resistance heating element and an electrical power source to produce a tobacco-flavored smoke or aerosol." Ex. 1006 at 1:6-10; *see also* 3:63-4:2. According to Brooks, "[p]referred smoking articles of the invention are capable of providing the user with the sensations of smoking (e.g., smoking, taste, feel, satisfaction, pleasure, and the like) by heating but not burning tobacco . . . ." *Id.* at 1:11-15.

39. As Brooks notes, many smoking articles, including tobacco substitute smoking materials, that generate flavored vapor and/or visible aerosols had been proposed in the past as alternatives to smoking products that burn tobacco. *Id.* at 1:19-34. Brooks goes on to say that these alternatives included "smoking products, flavor generators and medicinal inhalers which utilize electrical energy to vaporize or heat a volatile material, or attempt to provide the sensations of cigarette or pipe smoking without burning tobacco." *Id.* at 1:50-56.

40. In particular, Brooks discloses a smoking article 10 that includes a hand-held controller 14 and a cigarette or disposable portion 12 (*see id.* at 4:7-12; 7:15-16), which are illustrated in the following figure (Fig. 1) from Brooks:

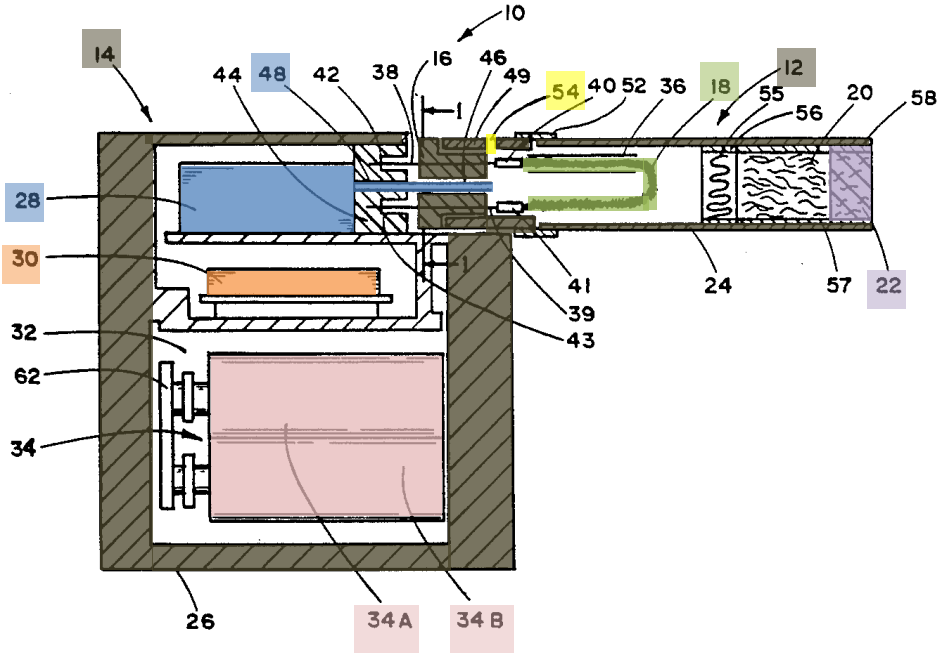

41. According to Brooks, "[t]he cigarette 12 includes electrical connection plug 16, resistance heating element 18 carrying an aerosol forming

substance, a roll of tobacco 20, mouth end filter 22, and a resilient overwrap 24." *Id.* at 7:17-20. "The aerosol forming substance can be, for example, a polyhydric alcohol, such as glycerin, propylene glycol, or a mixture thereof, water; a tobacco material such as tobacco aroma oil, a tobacco essence, a spray dried tobacco extract, a freeze dried tobacco extract, tobacco dust, or the like, in order to provide tobacco flavor; or a combination thereof. *Id.* at 8:8-14. Brook further notes that the aerosol forming substance is a "liquid", and generally discloses the preferred amounts of liquid aerosol containing substance that should be loaded into the disclosed device. *Id.* at 8:17-22.

42. The smoking article also includes a collar 49 which is friction fit around a portion of the length of the electrical connection plug 16 and "includes one or more peripheral air inlet openings 54 which provide a flow of ambient air through the cigarette during draw. *Id.* at 8:43-52. Brooks also discloses that "[a]lternatively, the air inlet can be positioned through the extreme inlet end of the cigarette or elsewhere through the periphery of the cigarette, such that drawn ambient air passing through the cigarette to the mouth of the user passes the resistance element." *Id.* at 8:43-57.

43. In addition, Brooks discloses that the heating element 18 may include "porous substrates in intimate contact with resistance heating components." *Id.* at 7:65-8:2. In other words, and as the PHOSITA would have understood, Brooks

discloses that the heating element 18 may be configured such that it comprise a porous substrate that is separate, but in physical (i.e., "intimate") contact with, resistance heating components. The PHOSITA would have understood that, in this configuration, the porous substrate holds the liquid aerosol forming material which is aerosolized by the heat from the resistance heating components.

44. Brooks further discloses the desirability of maintaining a heat exchange relationship between the aerosol forming substance and the electrical heating element. *See Id.* at 8:4-8 ("the heating element 18 is impregnated with or otherwise carries the aerosol forming substance in order that the aerosol forming substance is in a heat exchange relationship with the electrical heating element."). Brooks also explains that the heating element 18 carries "a suitable amount of aerosol forming substance." *Id.* at 7:26-30. A PHOSITA would have understood from this disclosure in Brooks that when the heating element 18 is configured as a porous substrate that is separate, but in intimate contact with, resistance heating components, the porous substrate stores the aerosol forming substance while the resistance heating components form an atomizer for heating and volatilizing the aerosol forming substance to generate an aerosol. Moreover, Brooks teaches that the aerosol forming substance may be a liquid. *Id.* at 8:4-22. As a result, a PHOSITA would have also understood that the "porous substrates" disclosed by Brooks function as liquid storage bodies.

45. Furthermore, because heating element 18 is preferably a "fibrous material having a high surface area and an adsorbant, porous, wettable character, in order to carry (i.e., store) a suitable amount of aerosol forming substance for effective aerosol formation" (*id.* at 7:26-30), the PHOSITA would have understood that the porous substrate (in the configuration of heating element 18 where the porous substrate is separate but in intimate contact with resistance heating components) is preferably made from a fibrous material having the properties identified by Brooks for storing a "suitable amount of aerosol forming substance for effective aerosol formation." As a result, Brooks expressly discloses a liquid storage body including fiber material. Finally, because the resistance heating components facilitate atomization, the PHOSITA would have understood that the liquid storage body (i.e., porous substrate) of Brooks is in physical (i.e., "intimate") contact with an atomizer (i.e., resistance heating components). .

46. Reading Brooks further one finds that the hand-held controller 14 includes a case 26 that provides "a convenient and aesthetic holder for the user. The outer housing 26 can have a variety of shapes and can be manufactured from plastic, metal, or the like." *Id.* at 7:20-21, 9:37-41. The hand-held controller 14 also includes "a puff actuated current actuation mechanism 28 having the form of a pressure sensitive switch, a time-based current control circuit 30, and a chamber 32 into which battery power supply 34 (shown as batteries 34A and 34B) is inserted."

Id. at 7:20-25. The control circuit 30 is connected to the pressure sensitive switch 28 as well as to batteries 34A and 34B. *Id.* at 9:51-55.

47. In addition, Brooks discloses that a receptacle 44 of the controller 14 includes "tube 48 which is inserted into passageway 46 of plug 16 to be in airflow communication with the internal region of the cigarette. The other end of tube 48 is in airflow communication with pressure sensing switch 28, so that changes in air pressure which occur within the cigarette during draw can be sensed by the switch." *Id.* at 9:41-50.

48. In operation, "[w]hen the user puffs on the mouthend of the cigarette, ambient air enters the cigarette through air inlet 54. The pressure actuated switch 28 responds to a sensed change in air pressure within the cigarette during draw and permits current flow through the heating element 18. As a result, the heating element experiences an increase in temperature which in turn heats and volatilizes the aerosol forming substance. The volatilized aerosol forming substance mixes with the drawn air and forms an aerosol. The volatilized aerosol forming substance (in aerosol or vapor form) passes through the tobacco roll 20 where it elutes tobacco flavor from the tobacco, and exits the mouthend filter 22 into the mouth of the user." *Id.* at 10:34-53.

B. U.S. Patent No. 5,944,025 ("Cook") (Ex. 1007)

49. Cook is titled "Smokeless Method And Article Utilizing Catalytic Heat Source For Controlling Products Of Combustion." Cook discloses a cigarette or smoking article 10 which is illustrated in the following figures (Figs. 1 and 1a) from Cook:

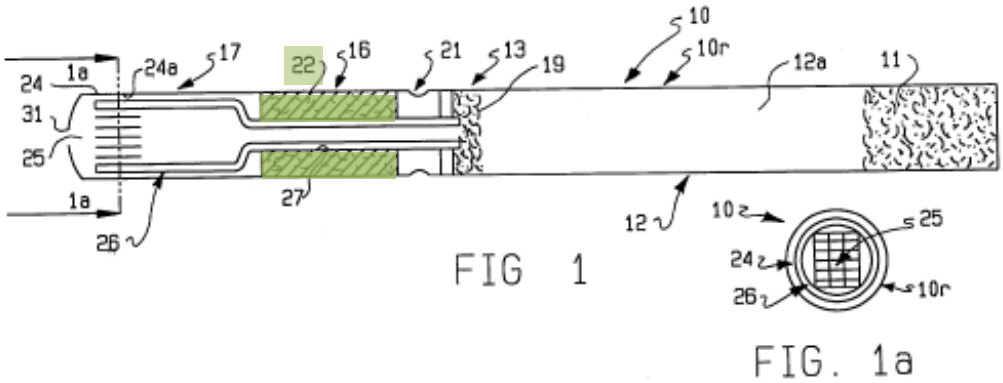

50. In particular, the smoking article 10 includes filter mouthpiece section 11, flavorant section 12, aerosol section 13, a fuel storage and air mixing section 16 and a catalytic combustion section 17. Ex. 1007 at 1:57-60.

51. Cook further discloses that the fuel storage and air mixing section 16 of Cook "includes fuel absorbent reservoir 22 including a wick material for storing liquid fuel in amounts ranging from about 300-500 microliters (µl). The absorbent fuel reservoir consists of a synthetic fiber liquid transfer wick material which utilizes capillary action." *Id.* at 2:18-22. Since fuel absorbent reservoir 22 both stores liquid fuel and consists of consists of a synthetic fiber liquid transfer wick material, the reservoir 22 is a "liquid storage body including fiber material."

52. Cook also discloses that in the operation, the cigarette 10 is lit with a conventional lighter at tip hole 31. *Id.* at 5:60-64. When the smoker draws on mouthpiece section 11, outside air flows through side holes 21 in fuel storage and air mixing section 16 and through end hole 31 in catalytic combustion section 17. *Id.* at 5:47-52. The outside air flow passes through fuel absorbent reservoir 22 in reservoir 16 containing ethanol fuel where a fuel/air mixture (fuel aerosol) is formed. *Id.* at 5:52-54. The fuel/air mixture exiting reservoir 22 flows to the catalytic combustion section 17 where it changes direction toward mouthpiece 11 and is heated by catalyzed combustion. *Id.* at 5:54-66. Combustion gases then flow out the catalytic combustion section 17 and through delivery tube 27 to glycerin containing plug support 19. *Id.* at 5:66-6:6. Combustion gases passing through glycerin containing plug support 19 form glycerin aerosol which flows through section 10 and picks up flavors from cut tobacco 12a. *Id.* at 6:1-5. The aerosol laden with flavorants finally passes through mouthpiece filter 11 to the smoker's mouth. *Id.* at 6:5-6.

C. U.S. Patent No. 6,155,268 ("Takeuchi") (Ex. 1008)

53. Takeuchi is titled "Flavor-Generating Device." Takeuchi discloses a flavor generating device for enjoying simulated smoking that includes a chamber having an air inlet port and an inhalation port, a gas passageway defined between the air inlet port and the inhalation port, a liquid container, at least one liquid

passageway having a first end portion which is in a fluid communication with the liquid and a second end portion which is in a fluid communication with the gas passageway; and a heater mounted at the second end portion of the liquid passageway. Ex. 1008 at 2:1-16.

54. Takeuchi further discloses that "a liquid containing a flavor substance, i.e., a liquid flavor source, is transported from within a liquid container through the liquid passageway by a capillary force exerted by the liquid passageway. Thus, if the preceding liquid flavor source is gasified or evaporated at the outlet end portion of the liquid passageway, the succeeding liquid flavor source is supplied to the outlet end portion of the liquid passageway by the capillary force." *Id*. at 2:17-25.

55. More specifically, Takeuchi discloses a flavor generating device 10 which is illustrated in the following figure (Fig. 1) from Takeuchi:

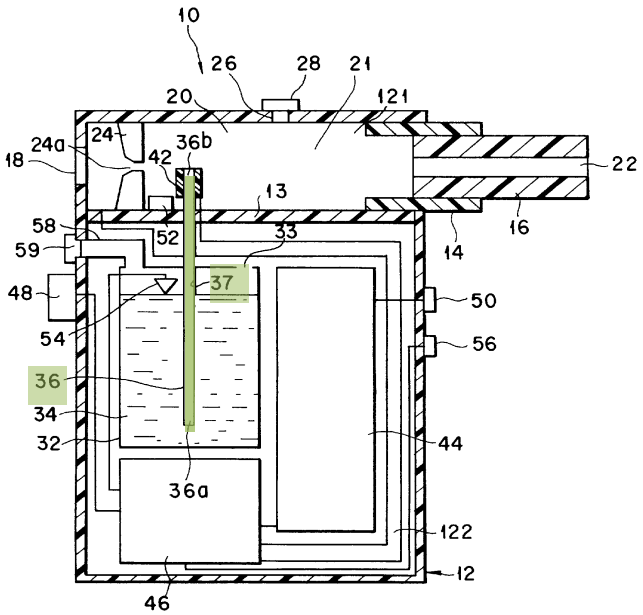

FIG. 1

56. The flavor generating device 10 includes a capillary tube 36 that defines a liquid passageway 37 for transporting a liquid 34 containing a flavor substance (including a substance forming aerosol when heated and tobacco components) by capillary force from a liquid container 32. *Id.* at 2:4-13; 5:28-30; 5:47-52. The lower and upper end of the capillary tube 36a is located within liquid container 32. The upper end of the capillary tube 36b is located in a gas passageway 20 that is between the air inlet port 18 and the inhalation port 22. *Id.* at 2:4-13; 4:50-52; 5:28-30; 5:47-52; 6:4-7.

57. As explained below, the tube 36 has a passageway 37, which may be filled with an intercommunicating pore structure that may comprise "bundled fibers" or other suitable materials. *Id*. at 3:36-49.

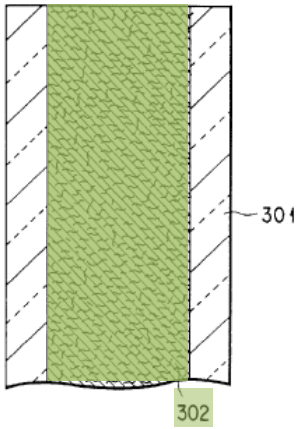

FIG. 14

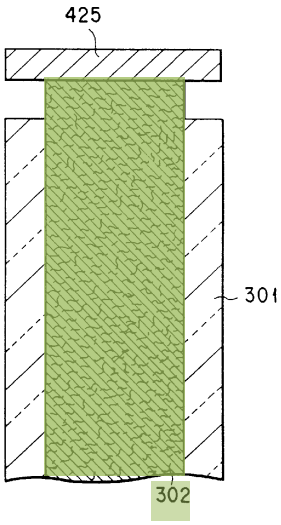

FIG. 15

58. As illustrated in Figures 14 and 15, the liquid passageway 37 may include an "intercommunicating pore structure 302." *Id.* at 10:50-55. According to Takeuchi, the intercommunicating pore structure may comprise "bundled fibers." *Id.* at 3:36-49. Because the pore structure 302 stores (and also transports) liquid and may be made from bundled fibers, it is "a liquid storage body including fiber material."

59. Takeuchi also discloses that a heater 42 is mounted at the upper end portion of the capillary tube 36b for heating the liquid transported from the liquid container 32. *Id*. at 2:13-16; 6:4-12; 7:57-8:4. As illustrated in Fig. 1, the heater 42 may consists of "a tubular body mounted to the capillary tube 36 and having an inner diameter equal to that of the capillary tube 36." *Id*. at 6:7-10; see also *id*. at Figs. 1 and 2A-2C. According to another aspect of the invention illustrated in Fig.

15, the heater 425 can be provided on a protruded end of the intercommunicating pore structure 302. *Id*. at 10:59-67; Fig. 15.

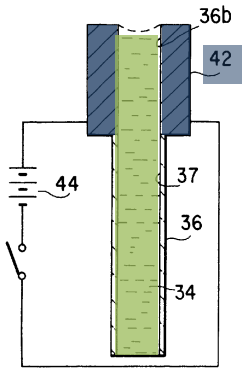

FIG. 2A

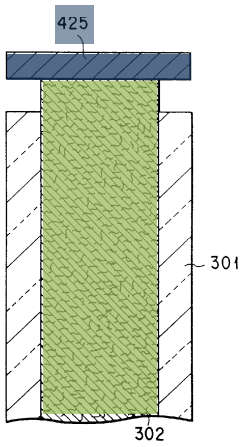

FIG. 15

Thus, Takeuchi teaches that the pore structure 302 (i.e., a liquid storage body including fiber material) is in physical contact with the heater 42 or 425.

VI. CLAIMS 15 AND 16 OF THE 726 PATENT ARE ANTICIPATED BY BROOKS

60. It is my opinion that each of claims 15 and 16 are expressly disclosed by Brooks.

A. Claim 15

61. Brooks discloses a smoking article that teaches the preamble and all of the limitations of claim 15.

1. " electronic cigarette"

62. Even if the preamble "electronic cigarette" is considered a claim limitation, Brooks meets this claim element. Specifically, the device of Brooks

employs an electrical resistance heating element and an electrical power source "to provide a tobacco-flavored smoke or aerosol and other sensations of smoking without burning tobacco or other substances, without producing any combustion or pyrolysis products including carbon monoxide or any sidestream smoke or odor." Ex. 1006 at 3:64-4:2. Thus, the device of Brooks functions as substitute for smoking.

63. More specifically, the device of Brooks includes "a cigarette or a disposable portion" 12 and "a reusable, hand-held controller 14." *Id.* at 4:7-12; 7:15-16. The cigarette 12 utilizes an air permeable high surface area electric resistance heating element [18] that normally carries aerosol forming and/or tobacco flavor substances prior to use" *Id.* at 4:7-12. The aerosol forming and/or tobacco flavor substances carried by the heating 18 element may include, for example, "a tobacco material such as a tobacco aroma oil, a tobacco essence, a spray dried tobacco extract, a freeze dried tobacco extract, tobacco dust, or the like, in order to provide tobacco flavor." *Id* at 8:4-14. The heating element 18 heats and volatilizes the aerosol forming substance, which forms an aerosol that is inhaled by a user. *Id.* at at 8:4-14; 10:40-58. As such, the device of Brooks generates liquid droplets for inhalation by a user, e.g., the volatilized aerosol forming substance.

64. Thus, while not a limitation of claim 15, a PHOSITA would have understood that Brooks discloses an "electronic cigarette" or a device for generating liquid droplets for inhalation by a user, where the device functions as a substitute for smoking.

2. "a housing having an inlet and an outlet"

65. The smoking article 10 of Brooks includes a cigarette 12 and a controller 14, which together form a housing of the smoking article. *Id.* at 7:15-20; 9:37-41. This housing has an air inlet 54 and an air outlet at the mouth end filter 22. *Id.* at 8:43-57; 10:40-53; Fig. 1. Thus, the first element of claim 15, "a housing having an inlet and an outlet," is disclosed in Brooks.

3. "an electronic circuit board and an atomizer having a heating element, within the housing"

66. The hand-held controller 14 of Brooks includes a time-based current control circuit 30, which is located within the housing consisting of cigarette 12 and hand-held controller 14. *Id.* at 7:20-25; Fig. 1. According to one aspect of the invention, the time-based control circuit 30 may include timer 112, resistors 161, 176, 178 and 180, capacitor 190, and transistor 110. *Id.* at 15:39-62; Fig. 10. A PHOSITA would understand from this disclosure that the time-based control circuit 30 is an electronic circuit board.

67. In addition, the heating element 18 of Brooks comprising "porous substrates in intimate contact with resistance heating components" is also located

within the housing consisting of cigarette 12 and hand-held controller 14. *Id.* at 7:65-8:3; Fig. 1. The resistance heating components of heating element 18 facilitate atomization of the aerosol forming substances, e.g., they volatilize the aerosol forming substance. *Id.* at 10:13-18; 10:40-49. As such, the resistance heating components of heating element 18 are an "atomizer having a heating element." Thus, the second element of claim 15, "an electronic circuit board and an atomizer having a heating element, within the housing" is disclosed in Brooks.

4. "a battery electrically connected to the electronic circuit board"

68. The batteries 34A and 34B of Brooks are electrically connected to the time-based current control circuit 30, i.e., the electronic circuit board. *Id.* at 7:20-25; 9:51-55. Thus the third element of claim 15, "a battery electrically connected to the electronic circuit board," is disclosed in Brooks.

5. "a stream passage within the housing leading from the inlet to the atomizer"

69. In the smoking article 10 of Brooks, ambient air that is drawn through the air inlet openings 54 and flows through the cigarette passes the resistance heating element 18. *Id.* at 8:50-57. The following figure (Fig. 1) of Brooks illustrates a stream passage (shown in red) for the stream of drawn ambient air between the air inlet openings 54 the resistance heating element 18:

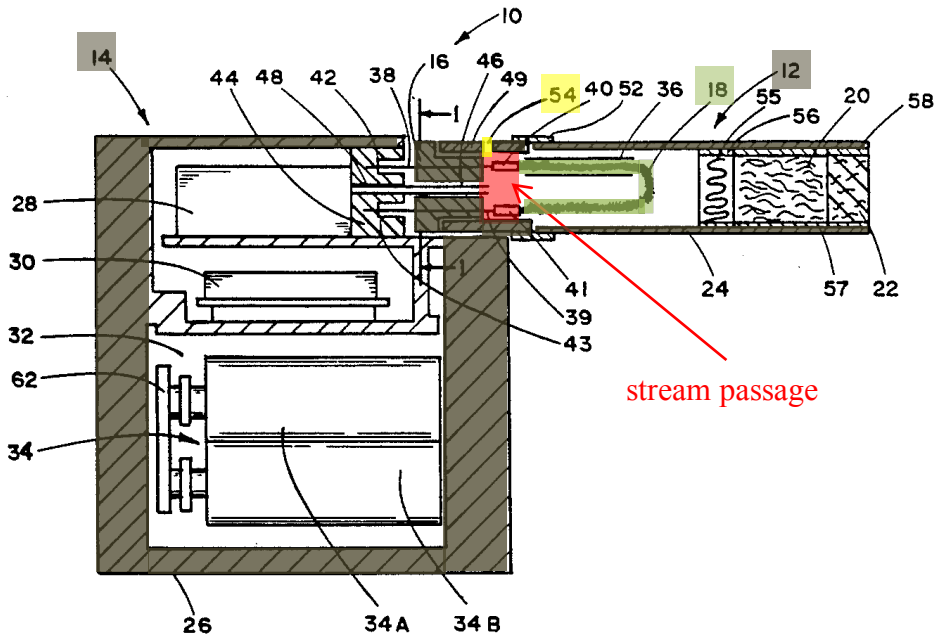

70. This stream passage of Brooks is within the housing formed by cigarette 12 and hand-held controller 14, and it leads from the inlet, i.e., air inlet 54, to the atomizer, i.e., the resistance heating components of heating element 18. *Id*. at 8:50-57; 10:40-49; Figure 1. Thus the fourth element of claim 15, "a stream passage within the housing leading from the inlet to the atomizer" is disclosed in Brooks.

6. "a liquid storage body including fiber material in a cylindrical section of the housing, with the liquid storage body in physical contact with the atomizer"

71. In the smoking article 10 of Brooks, the heating element 18 may comprise a porous substrate that is separate, but in intimate contact with, resistance heating components. *Id*. at 7:65-8:3. As I explained above in the description of Brooks (Section V.A), a PHOSITA would have understood that the porous

substrate is a "liquid storage body" for storing the aerosol forming substance and is in physical or direct contact with the resistance heating components that facilitate atomization (e.g., volatilization) of the aerosol forming substance and make up the "atomizer." *Id.* at 7:65-8:3; 8:4-22; 10:13-18; 10:40-49. In other words, Brooks discloses a heating element 18 that comprises a porous substrate (i.e., liquid storage body) that is separate from but in physical or direct contact with resistance heating components (i.e., the atomizer). Furthermore, Brooks teaches that the porous substrate (i.e., liquid storage body) is preferably made from a fibrous material having the characteristics necessary to "carry a suitable amount of aerosol forming substance." *Id.* at 7:26-30.

72. Moreover, as Figure 1 illustrates, the heating element 18 (and thus porous substrate in intimate contact with resistant heating components) is located within the cigarette 12 of the housing. Brooks also teaches that the cigarette 12 of the housing may have a cylindrical shape. *Id.* at Fig. 3; *see also id.* at 11:6-7 and 11:20-21 (noting that the embodiment illustrated in Figure 3 is "generally similar" to the embodiment illustrated in Figure 2, which in turn is "generally similar" to the embodiment illustrated in Figure 1). As a result, Brooks teaches that the heating element 18 (and thus porous substrate in intimate contact with resistant heating components) may be located in a cylindrical section of the "housing." Thus, the fifth element of claim 15, "a liquid storage body including fiber material

in a cylindrical section of the housing, with the liquid storage body in physical contact with the atomizer;" is disclosed in Brooks.

7. "an aerosol passage from the atomizer to the outlet"

73. In the smoking article 10 of Brooks, ambient air drawn through the air inlet openings 54 and flowing through the cigarette passes the resistance heating element 18. *Id.* at 8:50-57. In particular, the volatilized aerosol forming substance volatilized by the resistance heating components of heating element 18 mixes with the drawn air and forms an aerosol that passes through the tobacco roll 20 and exits the mouthend filter 22 into the mouth of the user. *Id.* at 10:34-53. The following figure (Fig. 1) of Brooks illustrates the aerosol passage (shown in red) for the aerosol to pass from the atomizer, i.e., the resistance heating components of heating element 18, to the outlet at mouthend filter 22 (*id.* at 10:45-53; 8:58-61; Fig. 1):

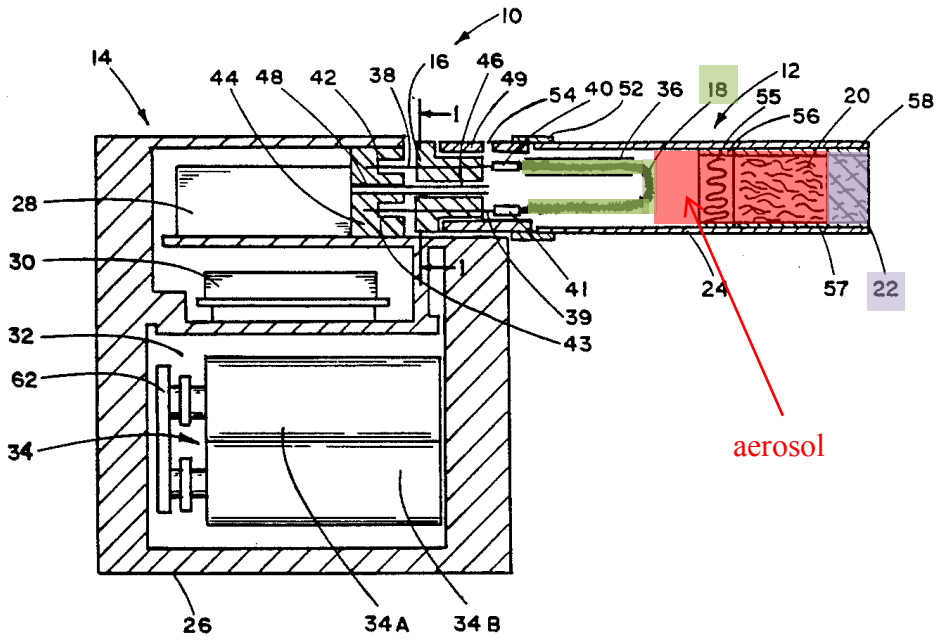

Thus, the sixth element of claim 15, "an aerosol passage from the atomizer to the outlet," is disclosed in Brooks.

74. With each and every element of claim 15 disclosed in Brooks, it is my opinion that that Brooks anticipates claim 15 of the 726 patent.

B. Claim 16

75. Brooks discloses a pressure sensing switch 28 and a tube 48 having one end in airflow communication with the internal region of the cigarette 12 and the other end in airflow communication with pressure sensing switch 28. Ex. 1006 at 9:41-50; Fig. 1. The pressure sensitive switch 28 and the tube 48 together form an airflow "sensor" for detecting changes in air pressure within the cigarette. An airflow sensor simply senses flow of air. The airflow is detected by a pressure difference caused by the airflow, for example via a differential pressure at points in

the air stream compared with ambient air pressure. In Brooks, the sensing of changes in air pressure within the cigarette is carried out by the pressure sensitive switch 28 and the tube 48.

76. Brooks also teaches that the end of tube 48 which is in airflow communication with the internal region of the cigarette 12 is disposed between air inlet 54 and heating element 18 (i.e., in the "stream passage") for sensing changes in air pressure dues to airflow within the cigarette. *Id.* at 9:41-50; Fig. 1; *see also id.* at Fig. 5 and 11:54-65 (noting that the embodiment illustrated in Figure 5 is "generally similar" to the embodiment illustrated in Figure 1).

77. In addition, Brooks discloses that pressure sensing switch 28 portion of the "sensor" is electronically linked to the control circuit 30 (i.e., "electronic circuit board"). *Id.* at 9:51-55.

78. With each and every element of dependent claim 16 and independent claim 15 disclosed in Brooks, it is my opinion that that Brooks anticipates claim 16 of the 726 patent.

79. The claim chart below shows where each limitation of claims 15 and 16 is found in Brooks.

Claim 15	
15. An electronic cigarette comprising:	Not a claim limitation. However, Brooks nonetheless discloses an "electronic

cigarette."

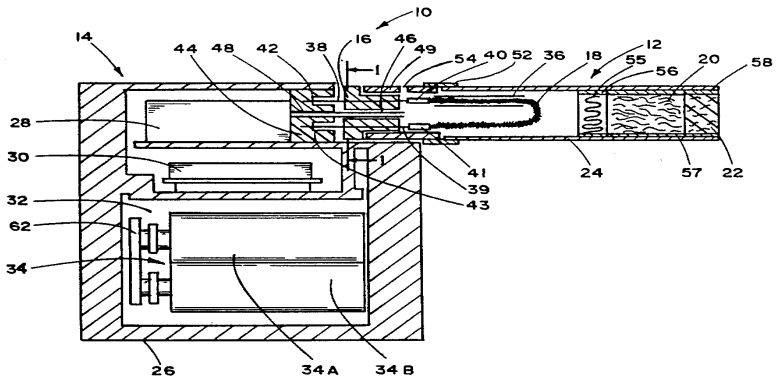

"The present invention relates to cigarettes and other smoking articles which employ an electrical resistance heating element and an electrical power source to provide a tobacco-flavored smoke or aerosol and other sensations of smoking without burning tobacco or other substances . . . ." Ex. 1006 at 3:63-4:2.

"In one aspect of the invention, the smoking article includes a cigarette or a disposable portion (eg, a cartridge) which utilizes an air permeable high surface area electrical resistance heating element that normally carries aerosol forming and/or tobacco flavor substances prior to use." Ex. 1006 at 4:7-12.

"Referring to FIG. 1, smoking article 10 includes a cigarette 12 and a reusable, hand-held controller 14." Ex. 1006 at 7:15-16.

"Preferably, the heating element 18 is impregnated with or otherwise carries the aerosol forming substance in order that the aerosol forming substance is in a heat exchange relationship with the electrical heating element. The aerosol forming substance can be, for example, a polyhydric alcohol, such as glycerin, propylene glycol, or a mixture thereof; water; a tobacco material such as tobacco aroma oil, a tobacco essence, a spray dried tobacco extract, a freeze dried tobacco extract, tobacco dust, or the like, in order to provide tobacco flavor; or a combination thereof." Ex. 1006 at 8:4-14.

	"When the user puffs on the mouthend of the cigarette . . . the heating element experiences an increase in temperature which in turn heats and volatilizes the aerosol forming substance. The volatilized aerosol forming substance mixes with the drawn air and forms an aerosol. The volatilized aerosol forming substance (in aerosol or vapor form) passes through the tobacco roll 20 where it elutes tobacco flavor from the tobacco, and exits the mouthend filter 22 into the mouth of the user. During the puff, the preferred current control circuit . . . regulates the flow of current to control the temperature experienced by the heating element and the amount of aerosol forming substance which is volatilized." Ex. 1006 at 10:53-58.
a housing having an inlet and an outlet;	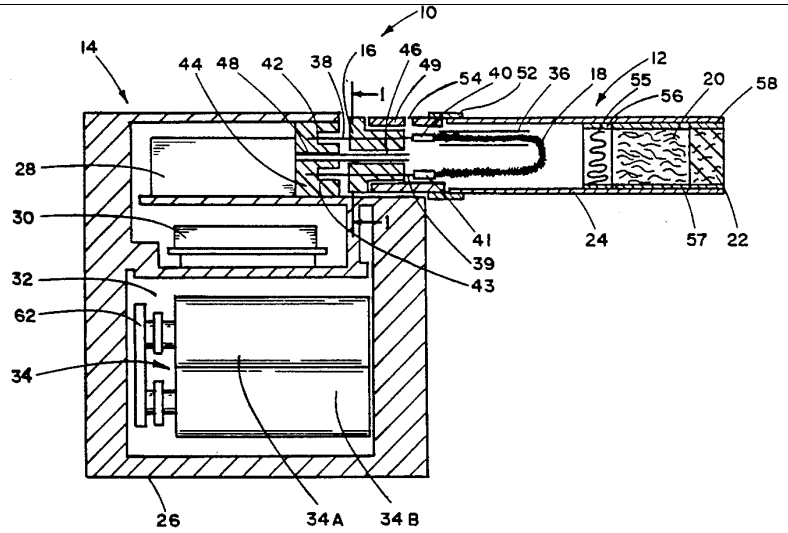 Ex. 1006 at Fig. 1. "The cigarette 12 includes electrical connection plug 16, resistance heating element 18 carrying an aerosol forming substance, a roll of tobacco 20, mouth end filter 22, and a resilient overwrap 24." Ex. 1006 at 7:17-20. "The reusable controller 14 includes a case 26 or outer housing which provides a convenient and aesthetic holder for the user. The outer housing 26 can have a variety of shapes and can be manufactured from plastic, metal, or the like." Ex. 1006 at 9:37-41. "Preferably, the collar 49 includes one or more peripheral air inlet openings 54 which provide a flow of ambient air through

	the cigarette during draw. Alternatively, the air inlet can be positioned through the extreme inlet end of the cigarette or elsewhere through the periphery of the cigarette . . . .” Ex. 1006 at 8:50-57. “When the user puffs on the mouthend of the cigarette, ambient air enters the cigarette through air inlet 54. . . . The volatilized aerosol forming substance mixes with the drawn air and forms an aerosol. The volatilized aerosol forming substance (in aerosol or vapor form) . . . exits the mouthend filter 22 into the mouth of the user.” Ex. 1006 at 10:40-53.
an electronic circuit board and an atomizer having a heating element, within the housing;	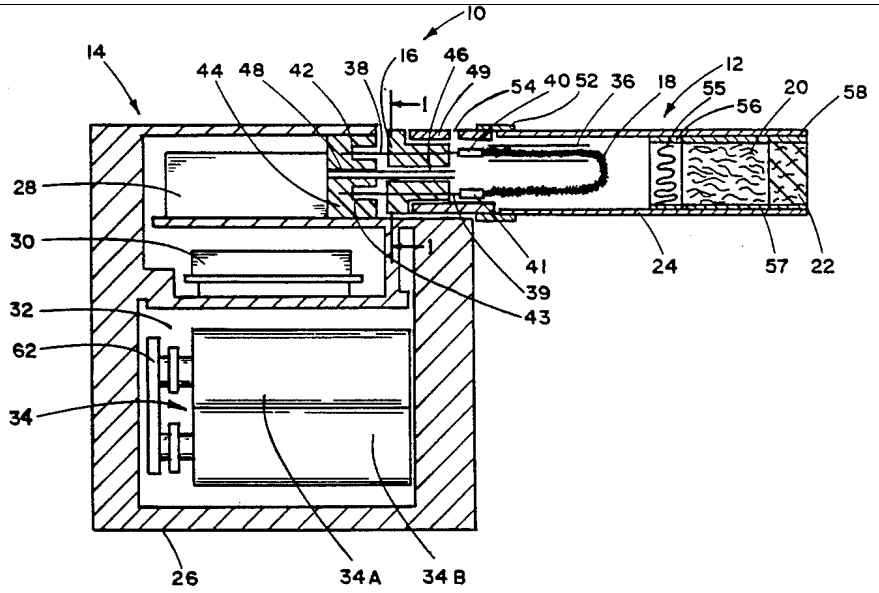 Ex. 1006 at Fig. 1. “The preferred controller 14 includes . . . a time-based current control circuit 30 . . . .” Ex. 1006 at 7:20-25. “The resistance heating element 18 employed in cigarette 12 preferably is a fibrous material having a high surface area and an adsorbant, porous, wettable character, in order to carry a suitable amount of aerosol forming substance for effective aerosol formation.” Ex. 1006 at 7:26-30. “Other suitable heating elements include . . . porous substrates in intimate contact with resistance heating components; and the like.” Ex. 1006 at 7:65-8:3.

	"[T]he heating element 18 is impregnated with or otherwise carries the aerosol forming substance in order that the aerosol forming substance is in a heat exchange relationship with the electrical heating element." Ex. 1006 at 8:4-8. ". . . the heating element experiences an increase in temperature which in turn heats and volatilizes the aerosol forming substance. The volatilized aerosol forming substance mixes with the drawn air and forms an aerosol." Ex. 1006 at 10:45-49.
a battery electrically connected to the electronic circuit board;	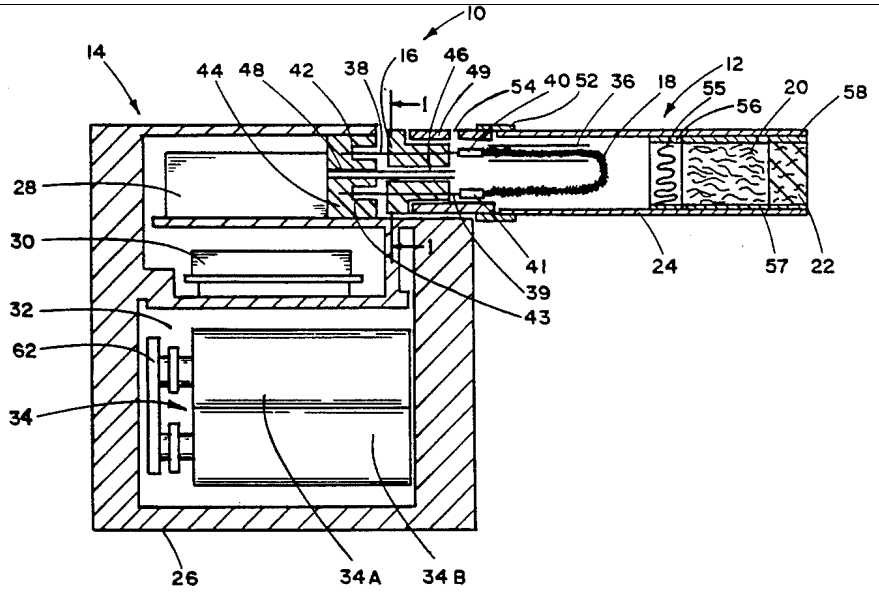 Ex. 1006 at Fig. 1. "The preferred controller 14 includes . . . a chamber 32 into which battery power supply 34 (shown as batteries 34A and 34B) is inserted." Ex. 1006 at 7:20-25. "Controller 14 also preferably includes a control circuit 30, which is connected to . . . batteries 34A and 34B via battery terminal 62." Ex. 1006 at 9:51-55.

a stream passage within the housing leading from the inlet to the atomizer;	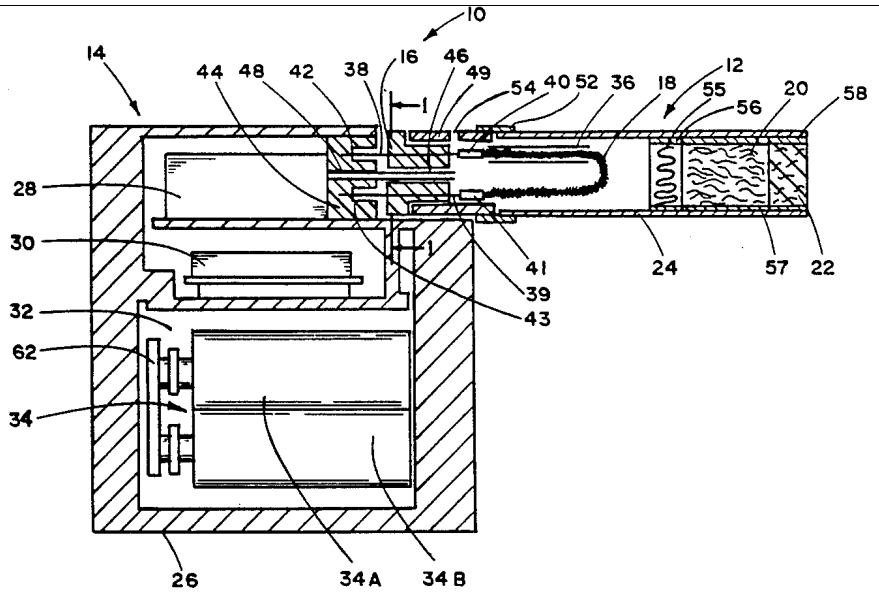 Ex. 1006 at Fig. 1. ". . . drawn ambient air passing through the cigarette to the mouth of the user passes the resistance element." Ex. 1006 at 8:55-57 "When the user puffs on the mouthend of the cigarette, ambient air enters the cigarette through air inlet 54. . . . As a result, the heating element experiences an increase in temperature which in turn heats and volatilizes the aerosol forming substance. The volatilized aerosol forming substance mixes with the drawn air and forms an aerosol." Ex. 1006 at 10:40-49.

a liquid storage body including fiber material in a cylindrical section of the housing, with the liquid storage body in physical contact with the atomizer; and	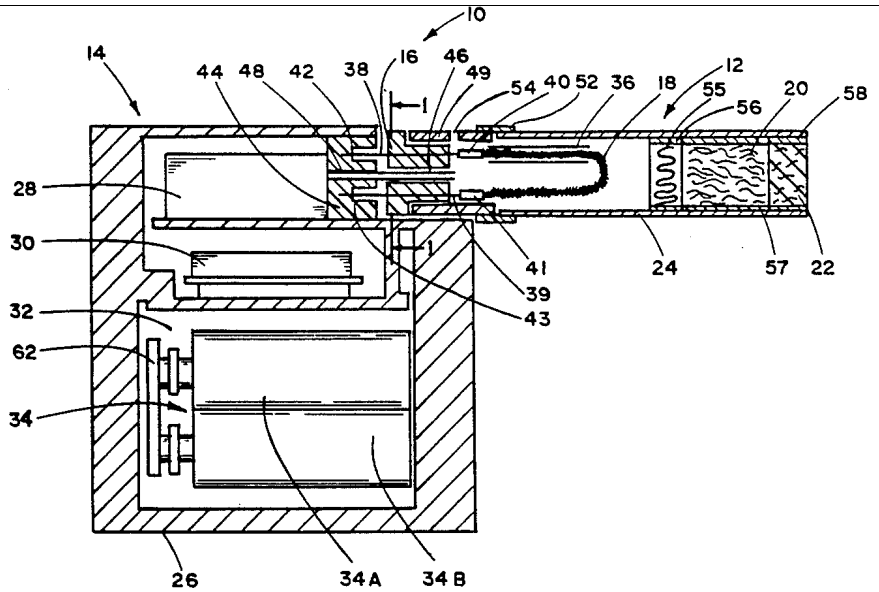 Ex. 1006 at Fig. 1. "Referring to FIG. 1, smoking article 10 includes cigarette 12 and reusable, hand-held controller 14. The cigarette 12 includes . . . heating element 18 carrying an aerosol forming substance . . . ." Ex. 1006 at 15-20. "The resistance heating element 18 employed in cigarette 12 preferably is fibrous material having a high surface area and an adsorbant, porous, wettable character, in order to carry a suitable amount of aerosol forming substance for effective aerosol formation." Ex. 1006 at 7:26-30. "[T]he heating element 18 is impregnated with or otherwise carries the aerosol forming substance in order that the aerosol forming substance is in a heat exchange relationship with the electrical heating element. The aerosol forming substance can be, for example, a polyhydric alcohol, such as glycerin, propylene glycol, or mixtures thereof; water; a tobacco material such as tobacco aroma oil, a tobacco essence, a spray dried tobacco extract, a freeze dried tobacco extract, tobacco dust, or the like, in order to provide tobacco flavor; or a combination thereof. Other suitable aerosol forming substances are well known in the art. See, for example, U.S. Pat. Nos. 4,714,092 and 4,756,318. While the loading of the aerosol forming

	substance can vary from substance to substance and from heating element to heating element, the amount of liquid aerosol forming substance used typically will be greater than about 15 mg and preferably ranges from about 25 mg to about 50 mg." Ex. 1006 at 8:4-22. "Other suitable heating elements include porous metal wires or films; carbon yarns, cloths, fibers, discs or strips; graphite cylinders, fabrics or paints; microporous high temperature polymers having moderate resistivities; *porous substrates in intimate contact with resistance heating components*; and the like." Ex. 1006 at 7:65-8:3 (emphasis added). 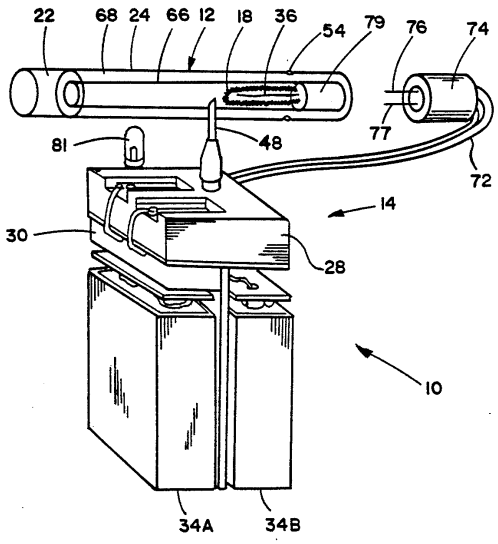 FIG. 3 Ex. 1006 at Fig. 3. "Referring to FIG. 3, the illustrated embodiment is generally similar to the embodiment of FIG. 2 [which is generally similar to the embodiment of FIG. 1]." Ex. 1006 at 11:6-7, 11:20-21.

an aerosol passage from the atomizer to the outlet.	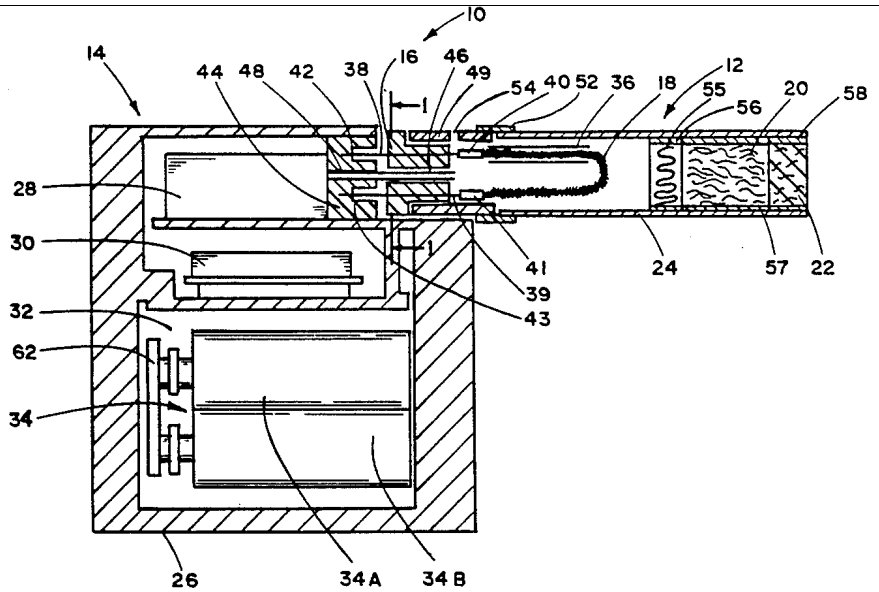 Ex. 1006 at Fig. 1. "[T]he cigarette 12 includes . . . resistance heating element 18 carrying an aerosol forming substance . . . ." Ex. 1006 at 7:15-19. "Other suitable heating elements include . . . a porous substrate in intimate contact with resistance heating components . . . ." Ex. 1006 a 7:65-8:3. "The cigarette can include a plug spacer member 55 positioned between the heating element 18 and the roll or charge of tobacco 20. The plug spacer member 55 conveniently permits passage of aerosol therethrough . . . ." Ex. 1006 at 8:58-61. "…the heating element experiences an increase in temperature which in turn heats and volatilizes the aerosol forming substance. The volatilized aerosol forming substance mixes with the drawn air and forms an aerosol. The volatilized aerosol forming substance (in aerosol or vapor form) passes through the tobacco roll 20 where it elutes tobacco flavor from the tobacco, and exits the mouthend filter 22 into the mouth of the user." Ex. 1006 at 10:45-53.

Claim 16	
16. The electronic cigarette of claim 15 further including a sensor in the stream passage, with the sensor electrically linked to the electronic circuit board.	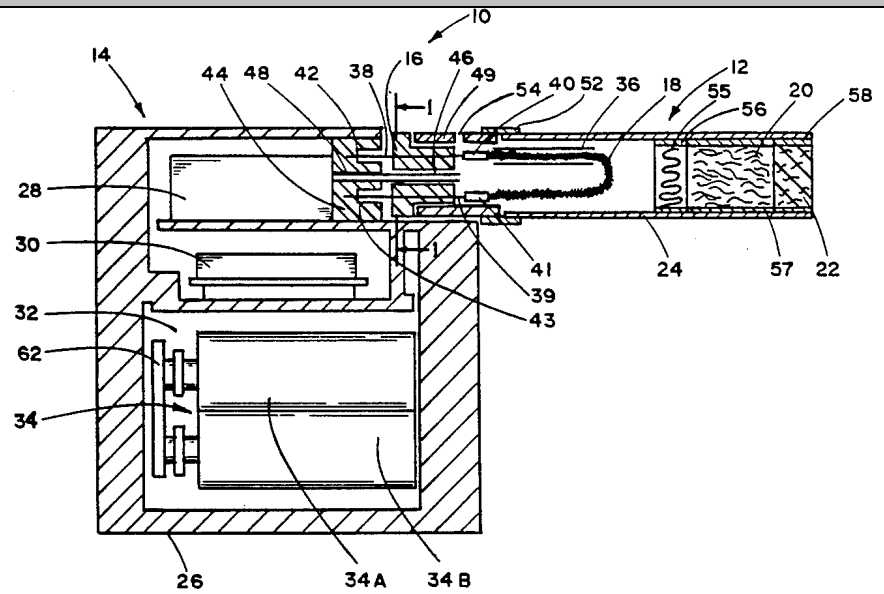 Ex. 1006 at Fig. 1. "Controller 14 includes an insulative receptacle 44 which includes plug-in connectors 42, 43 for engagement with prongs 38, 39 of plug 16. Receptacle 44 also includes *tube 48 which is inserted into passageway 46 of plug 16 to be in airflow communication with the internal region of the cigarette*. The *other end of tube 48 is in airflow communication with pressure sensing switch 28*, so that changes in air pressure which occur within the cigarette during draw can be sensed by the switch." Ex. 1006 at 9:41-50 (emphasis added). "Preferably, the collar 49 includes one or more peripheral air inlet openings 54 which provide a flow of ambient air through the cigarette during draw. Alternatively, the air inlet can be positioned through the extreme inlet end of the cigarette or elsewhere through the periphery of the cigarette . . . ." Ex. 1006 at 8:50-57. "Controller 14 also preferably includes *a control circuit 30, which is connected to a puff actuated, differential pressure sensitive switch 28 by electrically conductive wires (not shown)*, as well as to batteries 34A and 34B via battery terminal 62." Ex. 1006 at 9:51-55 (emphasis added).

VII. CLAIMS 15 AND 16 OF THE 726 PATENT ARE OBVIOUS

80. It is my opinion that each of claims 15 and 16 is obvious based on Brooks alone or Brooks in combination with Cook and/or Takeuchi. As discussed above, Brooks teaches that his "porous substrate" is made from a fibrous material. However, even if Brooks were silent about the structure of his "porous substrate," it would have nonetheless been obvious to include fiber material in the "porous substrate" of Brooks as taught by Brooks, as well as by Cook and/or Takeuchi.

81. I understand that a claimed invention may be obvious if the simple substitution of one known element for another yields predictable results to the PHOSITA. Brooks discloses that the heating element 18 can comprise a porous substrate that is separate from but in physical contact with resistance heating components. Ex. 1006 at 8:1-3. As I explained above in Section V.A, the PHOSITA would have understood that in such a configuration, the porous substrate of Brooks forms a liquid storage body for storing a liquid aerosol forming substance while the resistance heating components form an atomizer for heating and volatilizing the aerosol forming substance to generate an aerosol. *Id.* at 8:4-22 (the porous substrate is for storing the aerosol forming substance, which can includes liquids such as water, polyhydric alcohol, such as glycerin, or propylene glycol in combination with tobacco aroma oil, tobacco essence, and/or other tobacco derivatives); 10:45-48 ("the heating element experiences an increase in

temperature which in turn heats and volatilizes the aerosol forming substance". Thus, Brooks discloses that the "porous substrate" is a liquid storage body for storing the liquid aerosol forming substance in intimate contact with the resistance heating components. Ex. 1006 at 7:26-30; 8:1-22. .

82. Even if Brooks were silent about the material of construction for the "porous substrate" (which as noted above, is not the case; Brooks teaches that it "preferably is a fibrous material" (*id.* at 7:26-27; 8:1-3)), it would have nonetheless been obvious to construct the "porous substrate" from fiber, which Brooks discloses as a suitable material of construction for heating element 18. *Id.* at 7:26-30 ("preferably fibrous material"); 7:65 ("fibers").

83. As noted above, Brooks discloses that the heating element 18 "preferably is a fibrous material . . . in order to carry a suitable amount of [a liquid] aerosol forming substances for effective aerosol formation." Ex. 1006 at 7:26-30; 8:8-22. Given Brooks' preference for a "fibrous material" for carrying a suitable amount of liquid aerosol forming substance, the PHOSITA would have been motivated to also use the preferred "fibrous material" in Brooks' "porous substrates"/"resistance heating components" configuration so that the porous substrate carries a suitable amount of aerosol forming substance.

84. Cook and Takeuchi also disclose porous liquid storage bodies that include fiber materials. Specifically, Cook discloses a fuel absorbent reservoir 22

for storing liquid fuel, i.e., a porous liquid storage body, which comprises a synthetic fiber liquid transfer wick material. Ex. 1007 at 2:18-22. Takeuchi discloses that a liquid passageway comprising an intercommunicating pore structure 302 (i.e., a fibrous liquid storage body) that may be made from "bundled fibers." Ex. 1008 at Figs. 14 and 15; 10:50-67; 3:35-49. Although the fibrous liquid storage body of Takeuchi (i.e., intercommunicating pore structure 302) transports liquid, the PHOSITA would nonetheless consider the pore structure 302 a "storage" body because liquid is stored during the transport process. In other words, storage and transport are not mutually exclusive.

85. Thus, the PHOSITA would have understood that the fiber-containing porous materials of Cook and Takeuchi function to store liquid. In addition, neither the fiber-containing porous material of Cook nor the fiber-containing porous material of Takeuchi would change the manner in which Brooks carries the liquid aerosol forming substance. The PHOSITA would have understood that the the porous substrates of Books should have small spaces or pores through which the liquid aerosol forming substance may pass through capillary action. Capillary action refers to the movement of a liquid along the surface of the small spaces as a result of adhesion and surface tension. As portions of the liquid aerosol forming substance are heated and volatilized in Brooks, the remaining liquid within the volume of the porous substrates is redistributed by capillary action so that the

liquid becomes uniformly distributed again in the spaces where volatilization is occuring. Similarly, Cook and Takeuchi both use capillary action to move liquid into areas within their respective fiber-containing porous materials where volatilization is occuring. Cook's absorbent fuel reservoir 22 consists of a fiber-containing porous material "which utilizes capillary action" to supply liquid fuel for a fuel/air mixture. Ex. 1007 at 2:21-22. Takeuchi's intercommunicating pore structure 302 (which can comprise bundled fibers (*see* 10:50-65; 3:42-50) also uses capillary action to supply a liquid flavor substance to an atomizer as illustrated in Figure 15. Thus, substituting the fiber-containing porous materials of Cook and/or Takeuchi for the "porous substrates" of Brooks is merely the substitution of one known element for another known element to achieve a predictable result, namely, liquid storage and transport via capillary action.

86. Takeuchi provides further motivation for substituting bundled fibers for the "porous substrate" of Brooks. The bundled fibers of Takeuchi hold an aerosol forming liquid in an intimate, heat exchange relationship with an atomizer. Specifically, as illustrated in Figure 15 of Takeuchi, the intercommunicating pore structure 302 (which can comprise bundled fibers (*see* 10:50-65; 3:42-50)) is in an intimate, heat exchange relationship with the heater (i.e., atomizer) 425 at outlet portion 36b. A similar function performed by the "porous substrate" of Brooks. Brooks "porous substrate," which functions to hold a liquid aerosol forming

material, is in intimate contact with resistance heating components. Ex. 1006 at 8:1-3; 15-22. As Brooks explains, the heating element 18 (which may be configured as a porous substrate/resistance heating components) "carries the forming substance [in] a heat exchange relationship with the electrical heating element." *Id.* at 8:5-9. Accordingly, because the intercommunicating pore structure of 302 of Takeuchi and the "porous substrate" of Brooks are both disclosed for holding a liquid aerosol forming substance in an intimate, heat exchange relationship with a heating component for atomization, the PHOSITA would have been motivated to use the intercommunicating pore structure 302 of Takeuchi (which Takeuchi expressly discloses may be "bundled fibers") as the "porous substrate" of Brooks. The proposed modification is merely the substitution of one known element for another to achieve a predicted result, namely, holding a liquid aerosol forming substance in an intimate, heat exchange relationship with a heater for achieving vaporization.

87. A PHOSITA would have been even further motivated to make the "porous substrate" of Brooks from fiber, as taught by Takeuchi, Cook and/or Brooks. As the PHOSITA would have understood, fibrous liquid storage materials are preferred for preventing unwanted leakage. In other words, fiber was well known as an effective liquid storage material. For example, U.S. Patent No. 4,947,874 ("Gehrer") discloses a capillary body in a liquid ink container that is

made of “fibrous materials” and “functions as a pressure equalization member vessel and additionally makes sure that ink cannot leak out through the vent.”Ex. 1012 at 2:33-36; 3:7-15. Thus, the PHOSITA would have had a preference for a “porous substrate” made from a fiber material for the additional reason that a fiber material would minimize and likely prevent undesired and unintended leaking of the aerosol forming liquid from the “porous substrate” of Brooks.

88. Thus, in summary, Brooks discloses that the “porous substrate” is preferably “fibrous material.” However, even if Brooks does not expressly disclose the structure of the “porous substrate,” Brooks nonetheless teaches the PHOSITA that the “porous substrate” of Brooks is made from “fibrous material.” Moreover, it would have also been obvious to substitute the fiber-containing porous liquid storage materials of Cook and/or Takeuchi for the “porous substrate” of Brooks for the reasons stated above.

89. The claim chart below shows where the “liquid storage body including fiber material” limitation of claims 15 is found in the prior art.

a liquid storage body including fiber material in a cylindrical section of the housing, with the liquid storage body in physical contact with the atomizer; and	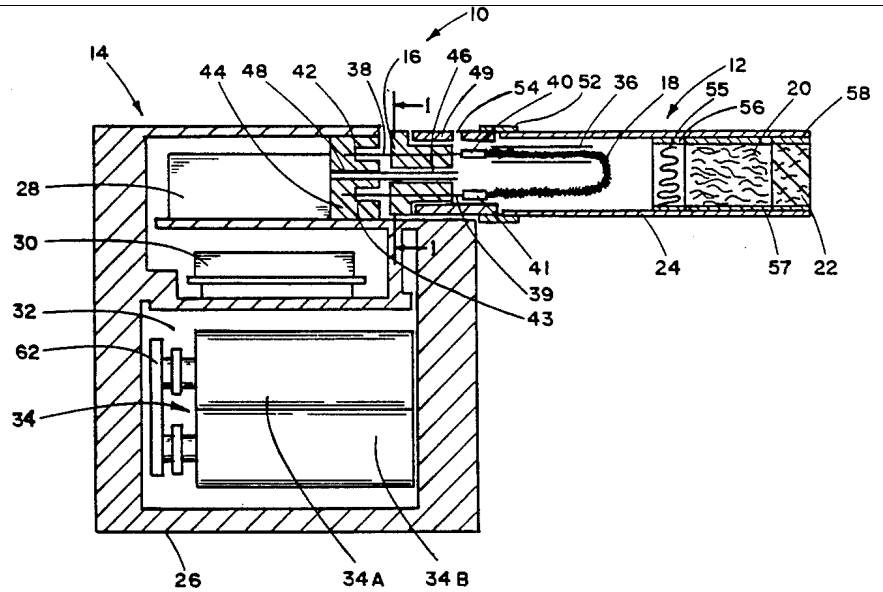 Ex. 1006 at Fig. 1. "Referring to FIG. 1, smoking article 10 includes cigarette 12 and reusable, hand-held controller 14. The cigarette 12 includes . . . heating element 18 carrying an aerosol forming substance . . . ." Ex. 1006 at 15-20. "The resistance heating element 18 employed in cigarette 12 preferably is fibrous material having a high surface area and an adsorbant, porous, wettable character, in order to carry a suitable amount of aerosol forming substance for effective aerosol formation." Ex. 1006 at 7:26-30. "[T]he heating element 18 is impregnated with or otherwise carries the aerosol forming substance in order that the aerosol forming substance is in a heat exchange relationship with the electrical heating element. The aerosol forming substance can be, for example, a polyhydric alcohol, such as glycerin, propylene glycol, or mixtures thereof; water; a tobacco material such as tobacco aroma oil, a tobacco essence, a spray dried tobacco extract, a freeze dried tobacco extract, tobacco dust, or the like, in order to provide tobacco flavor; or a combination thereof. Other suitable aerosol forming substances are well known in the art. See, for example, U.S. Pat. Nos. 4,714,092 and 4,756,318. While the loading of the

aerosol forming substance can vary from substance to substance and from heating element to heating element, the amount of liquid aerosol forming substance used typically will be greater than about 15 mg and preferably ranges from about 25 mg to about 50 mg." Ex. 1006 at 8:4-22.

"Other suitable heating elements include porous metal wires or films; carbon yarns, cloths, fibers, discs or strips; graphite cylinders, fabrics or paints; microporous high temperature polymers having moderate resistivities; porous substrates in intimate contact with resistance heating components; and the like." Ex. 1006 at 7:65-8:3 (emphasis added).

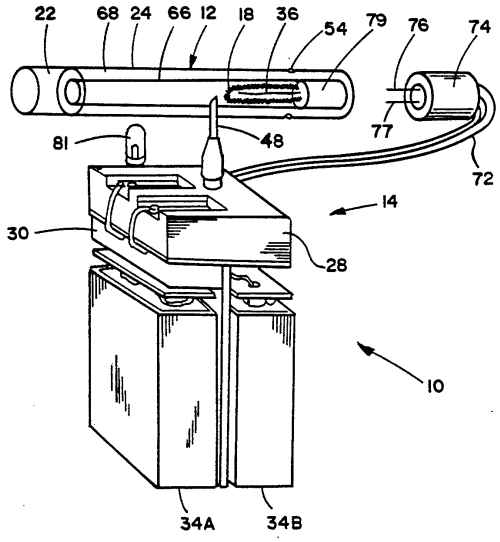

FIG. 3

Ex. 1006 at Fig. 3.

"Referring to FIG. 3, the illustrated embodiment is generally similar to the embodiment of FIG. 2 [which is generally similar to the embodiment of FIG. 1]." Ex. 1006 at 11:6-7, 11:20-21.

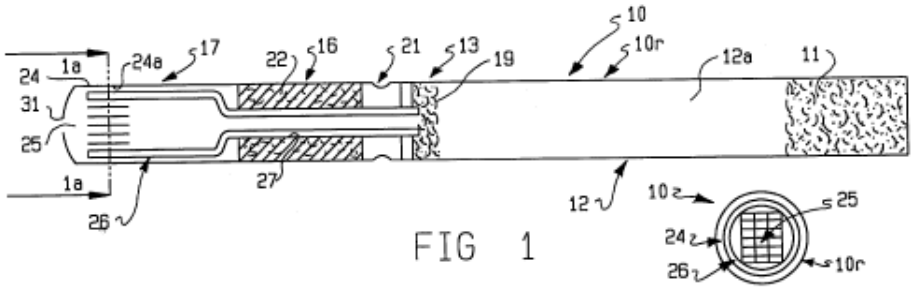

FIG 1

FIG. 1a

Ex. 1007, Figs. 1 and 1a.

"[Fuel storage and air mixing] section 16 includes fuel absorbent reservoir 22 including a wick material *for storing liquid fuel* in amounts ranging from about 300-500 microliters (μl). The absorbent fuel reservoir consists of *a synthetic fiber liquid transfer wick material* which utilizes capillary action." Ex. 1007 at 2:18-22 (emphasis added).

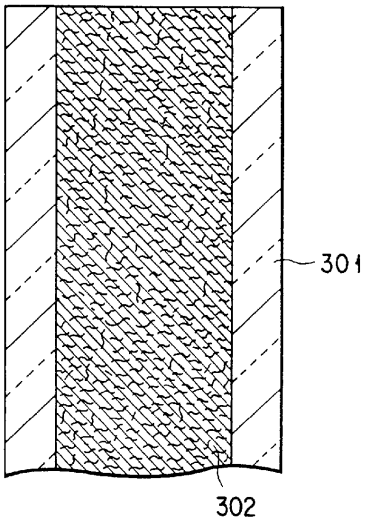

FIG. 14

Ex. 1008 at Fig. 14.

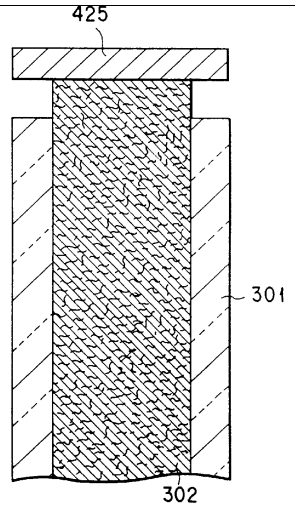

FIG. 15

Ex. 1008 at Fig. 15.

"Fig. 14 is a cross-sectional review showing another embodiment of the liquid passageway for a liquid flavor source used in a flavor-generating device according to the invention. In this case, a liquid passageway 372 is constituted by the intercommunicating *pore structure 302* filled in an enclosure 301, as mentioned earlier. The enclosure 301 may be provided by a tube, or two plates arranged spaced apart from each other wherein both sides are sealed. In this embodiment, a heater or heaters (not shown) may be arranged as in FIG. 1, 10 or 11. Further, as shown in FIG. 15, the intercommunicating pore structure 302 may protrude from the enclosure 301. In such a case, a heater 425 can be provided on the protruded end of the intercommunicating pore structure 302.

FIG. 15 is a cross-sectional view showing still another embodiment of the liquid passageway for a liquid flavor source used in a flavor-generating device according to the invention." Ex. 1008, 10:50-67 (emphasis added).

"In the present invention, the liquid passageway through which the liquid flavor source is transported by the capillary force can be constituted by . . . an inter-communicating void or pore structure filled in an enclosure. The intercommunicating pore

	structure refers to a structure having intercommunicating voids or pores through which the liquid may be elevated from the inlet of the passageway which is in fluid communication with the liquid flavor source contained in the liquid container to the outlet of the passageway by the capillary force. Representative examples of the structure include open-cell foamed structure, and *bundled fibers*, but should not be limited thereto." Ex. 1008 at 3:35-49 (emphasis added).

90. All of the other limitations of claims 15 and 16 are disclosed in Brooks for the reasons discussed above with regard to anticipation. With each and every element of claims 15 and 16 disclosed in a modified Brooks alone or in combination with Cook and/or Takeuchi, it is my opinion that that claims 15 and 16 of the 726 patent would have been obvious.

VIII. CONCLUSION

91. For the reasons set forth above, it is my opinion that claims 15 and 16 of the 726 patent are anticipated by Brooks or would have been obvious based upon Brooks alone or in combination with Cook and/or Takeuchi.

92. This declaration is based on my present assessment of materials and information currently available to me. My investigation and assessment may continue, which may include reviewing documents and other information that may yet be made available to me. Accordingly, I expressly reserve the right to continue my study in connection with this case and to expand or modify my opinions and conclusions as my study continues.

93. I declare under penalty of perjury under the laws of the United States that the foregoing is true and correct.

Dated: July 2, 2016

Robert H. Sturges

Dr. Robert H. Sturges

EXHIBIT A TO THE

DECLARATION OF DR. ROBERT H. STURGES

CURRICULUM VITAE

Robert H. Sturges, Jr.

GENERAL:

Education:
S.B.-S.M. Mechanical Engineering (combined degree), M. I. T., June, 1969
Ph.D. Mechanical Engineering, Carnegie Mellon University, December, 1986

Positions Held:

1969-1974	Staff Engineer, Charles Stark Draper Laboratories, Cambridge, MA 01239 Mechanical/electrical system design and analysis for the Apollo project; teleoperator controls research.
1974-1977	Lead Engineer, Westinghouse Electric, R&D Center (R&D), Churchill, PA 15238 Kinematic/mechanical/electrical system design and analysis for product and process applications.
1977-1984	Senior Engineer, Westinghouse R&D Robotics/teleoperator system design for nuclear fuels and reactor maintenance; flexible manufacturing system development for sheet metal and wire harness applications.
1984-1985	Residency year; research in dexterity.
1985-1986	Principal Engineer, Westinghouse Productivity and Quality Center (PQC), Oakdale, PA 15230 Development of design for assembly methods; teaching design for producibility and statistical process control.
1986-1987	Fellow Engineer, Westinghouse PQC Teaching design for producibility and statistical process control methods, Value Engineering facilitator.
1987-1992	Assistant Professor, Carnegie Mellon University, Department of Mechanical Engineering
1992-1997	Associate Professor, Carnegie Mellon University, Department of Mechanical Engineering
1997-2001	Associate Professor, Virginia Tech, Departments of Mechanical Engineering and Industrial & Systems Engineering
2001-	Professor, Virginia Tech, Departments of Mechanical Engineering and Industrial & Systems Engineering, Director of Robotics and Automation Laboratory

Exhibit 1009-00061

TEACHING AND EDUCATION

A. *Undergraduate Student Projects:*

M. Burke, "Foot-Operated Mouse" 1988
J. Kalvan, "Balancing Machine" 1988
J. Kalvan, "Weaving Machine" 1989
R. Saulnier, “Quincunx” 1990
M. Pogozelski, “Probability Machine” 1990
P. Downey, “Review of Design for Assembly Methods,” 1990
C. Wivell, “3-D Displays of Functions” 1991
A.-C. Kopp, “Generalized 3-D Displays” 1991
M. Darcy, “Modular Quincunx” 1991
C. Tesluk, “Hydrofoil Stabilizer for Sailboats” 1991
A. R. Abid, “Ball Mill Stabilizer,” 1991 SURG awardee.
K. Pogany, “CAD/CAM System” 1992
S. Radney, “VuMan Shell” 1993
S. Crouse, “Prototype Flexible Wiring” 1993
J. Steven, “FMS Programming System” 1993
D. Fontaine, “Conceptual Design System” 1993
C. Tesluk, “Variable Attack Wind Turbine,”1993 SURG awardee.
J. R. Kasperik, “Adjustable Sheetmetal Gripper” 1993
M. T. Angus, “Bending Press Flexibility Modelling” 1993
M. Sigrist, “Design of a Table Top NC Mill” 1993
A. Rose, “Ultra-light Weight Steering System” 1994
W. Ouyang, “APT Translator for NC Mill” 1994
P. Klabnik, “Drives and Control for NC Mill” 1994
K. F. Moser, “Surgical Teleoperator Hand Control” 1994
T. Bruce, “An Adjustable Gripper for Sheet Metal Handling” 1994
R. Fenza, “Analaysis and Simulation of a Robotic Gripper” 1995
S. Radney, “Convertible Child Seat” 1995
R. Sullivan, “Laser-Based DME for Medical Imaging” 1995
T. Okimoto, “Magnetic Structure for Haptic Interface” 1996
E. Augustin, "Fuel Injection for Formula Racing Engine" 1997
M. Abali, "Braking System Design for Formula Racecar" 1998
D. C. Reubush, "Optimization of Tires for Formula Racecar" 1999
J. Ballenger, "CAD Modeling of Formula Racecar" 2000
J. R. Batman, “Directional Drilling” 2003

B. *MS Projects Completed:*

P. Rao, "Engineered Compliances for Non-symmetric Insertion Tasks," Spring 1990
J.-T. Yang, “Orientation Feature Analysis for Assembly,” Fall 1991
N. Pektas, “Stabilization of Nonlinear Computation Circuits” Fall 1992
Omid Rezania, “Assembly Process Synthesis,” May 94.
Dongwon Lee “Design for Disassembly,” May 94.
M. DeGuire “Operational Software for Control of Student CNC Milling Machine” Jan 1995

Exhibit 1009-00062

Chris Reider “Robotic Wire Termination,” May 1996
H. Bauer, "Massively Parallel Micro Assembly" 1999

C. *ME Theses Completed: (please note that at CMU, the terms ME and MS are reversed. Thus, the following works through 1996 are the equivalent of an MS Thesis at VT.)*

W. Wang, "Understanding Machinese," 1989
S. Laowatanna, "Physics of Endoscopes," 1990
E. Y. Hershkowitz, "Analog Matrix Inversion," 1991
K. O’Shaughnessy, "Functional Decomposition in Design," 1991
J. H.-W. Wong, “Design for Assembly of Large Components,” 1991
M. I. Kilani, "Design for Assembly Reasoning System," 1991
C.-H. Wang, “2D and 3D Models of Bending Processes,” 1992
R. G. Reed, “Performance-Intelligent Design Advisors” 1993
D. O. Hunt, “Application of Design for Assembly Theory to Assembly Workstation Design” 1993
C.-S. Chien “Optimization of Bending Processes” 1994
Gita Krishnaswamy “Control for Planetary Rover,” 1994
André Butler “Design for Disassembly,” 1995
Hong Dao “Reasoning with Functions in Design,” 1995
(Winner of the "Bennet Prize" for best ME Project)
Anne-Claire Kopp “Design of Passive Assembly Devices,” 1996

MS Theses Completed:

B. Wells, "Control of Multi-unit Tracked Vehicles" 6/99
J. Marehalli, "Optimization of Handling & Gripper Design" 9/99
A. Kanarat, "Modeling & Simulation of Multi-unit Tracked Vehicles" 9/99
V. Aishwarya, "A Software Based Hierarchical Real Time Control System for Rapid Development of Mobile Robot Prototypes", 4/00
S. Wiedmann, "Kinematic Analysis Of Threaded Fastener Assembly In 3 Dimensions", 2/00
Y. Wongwanich, "Fitt's Law Model for Large and Heavy Plates", 9/01
M. Abbott, "Compliance Model for a 6-Dof Robot", 4/02
S. Moutran, "Workspace Analysis for Fiber Placement", 5/02

D. *Ph.D. Theses Completed:*

S. Laowatanna, “Physics of Rapid Assembly” 6/94
K. Elkins, “Precision Sheet Metal Processes” 8/94
G. Roston, “Genetic Design Methodology for Configuration” 12/94
K. Sathirakul, “Geometric Modeling of Assembly” 9/97
V. Ayyadevara, “Algorithmic Planning of the Part Stacking Process” 12/99
A. Kanarat, "Control of Multi-unit Tracked Vehicles" 5/04
M. Lee, “Non-Autoclave Processing of Composites” 5/04
R. Anderson, "A New Approach to Materiel Movement Modeling" 4/06
J. Choi, “Workspace Modeling for Fiber Placement" 4/06

Exhibit 1009-00063

G. Chaudhari, “Optimization of Factory Processes”

In Progress:

R. Jientrakul, "Vision-based Factory Automation"
R. Rich, “Optimization of a Truck-drone in Tandem Delivery Network”

E. *Course Development:*

Fall 1988: Developed 7 weeks of new material and introduced 10 “Take Home” Lab Problems for “Manufacturing Sciences” 24-208.

Spring 1990: Introduced "Design for Manufacture" 24-268

Fall 1991: Co-developed “Fundamentals of Mechanical Engineering” 24-101, with Prof. C. Amon
Featured in *Mechanical Engineering,* Aug, 92

Fall 1992: Started the “24-101 Live Steam Challenge” a distance competition for Freshman with student-designed pint-sized steam powered vehicles.

Fall 1997: Developed 6 weeks of new material and introduced 8 “Take Home” Lab Problems for “Manufacturing Processes” ISE-2204.

Summer 1998: Revised ISE-2204 for "Green Engineering Processes" emphasis, converted course material to web-based format.

Summer 2000: Introduced "Design and Manufacturing Integration" ME/I&SE 5984

Spring 2002: In ME 4524 and ECE 4704: Developed new course pack covering robotics theory and mathematical principles. Developed set of 6 new application lab projects using an industrial robot to build/assemble a working mobile robot.

Fall 2002: In ISE2204: Developed new approach to interactive learning in which all student work is presented orally in lieu of paper-based grading. Indeed, there are no grades at all during the semester, just “competent’ or “quality” evaluations, and each student must complete each assignment before proceeding to the next one. The result was gratifying: all students who passed are competent in this subject, and many achieved a depth of understanding that indicates a quality learning experience.

Exhibit 1009-00064

Fall 2004 In ISE4264 Selected a new up-to-date textbook, authored ten new hands-on assignments, carried out major upgrade to the equipment in the DH197 lab for this purpose.

RESEARCH-BASED PUBLICATIONS

A. *Books:* Sturges, Robert H., Jr., 2015, Practical Field Robotics, John Wiley, 1st edition, ISBN 978-1-118-94114-0.

B. *Critically Reviewed Papers:*

Published & Accepted Journal Papers:

j1. Sturges, R.H. 1988. "Analog Matrix Inversion," *IEEE Journal of Robotics and Automation,* Vol 4, No. 2. pp 157-162.

j2. Sturges, R.H. 1988. "A Three Dimensional Assembly Task Quantification with Application to Machine Dexterity," *International Journal of Robotics Research,* Vol 7, No. 4. pp 34-78.

j3. Sturges, R.H., and Wright, P.K., 1989 "A Quantification of Dexterity," *Journal of Robotics and Computer Integrated Manufacturing,* Vol. 6, No. 1, pp 3-14.

j4. Sturges, R.H., 1989. "A Quantification of Manual Dexterity: the Design for Assembly Calculator," *Journal of Robotics and Computer Integrated Manufacturing,* Vol. 6 No. 3, pp 237-252.

j5. Sturges, R.H., 1989. "Toward a Rational Workholding Methodology" *Journal of Robotics and Computer Integrated Manufacturing.* Vol. 9, No. 3.

j6. Sturges, R.H., and Wang, W., 1990. "Application and Experimental Results of Geometric Models of Face Milling" ASME *Manufacturing Review.* Vol 3, No. 2, pp 115-122.

j7. Sturges, R.H., 1990. "A Quantification of Machine Dexterity Applied to an Assembly Task," *International Journal of Robotics Research,* Vol 9. No. 3, pp 49-62.

j8. Wong, J. H.-W., and Sturges, R.H., 1992. "Design for Assembly Factors for Large and Heavy Parts" *ASME Journal of Mechanical Design,* Vol. 116. No. 2, pp 508-510.

j9. Sturges, R.H., 1992. "Monitoring Milling Processes through AE and Tool/Part Geometry," ASME *Journal of Engineering for Industry.* Vol. 114, No. 1, pp 8-14.

j10. Sturges, R.H., and Kilani, M., 1992. "Towards an Integrated Design for Assembly Evaluation and Reasoning System" *Journal of Computer Aided Design.* Vol 24, No. 2, February, pp 67-79.

j11. Kilani, M. I., and Sturges, R.H., 1992. "Detection and Evaluation of Orientation Features for CAD Part Models" *Journal of Engineering Design.* Vol 2, No. 3, Jan 1992.

Exhibit 1009-00065

j12. Sturges, R.H., and Laowattana, S., 1993. "A Flexible Tendon-Controlled Device for Endoscopy," *International Journal of Robotics Research.* Vol. 12 No. 2, pp 121-131, April 1993

j13. Sturges, R.H., O'Shaughnessy, K., & Reed R. G., 1993. "A Systematic Approach to Conceptual Design Based on Function Logic" *Int'l Journ. of Concurrent Engineering: Research & Applications (CERA),* Vol. 1, No. 2, June 1993, pp 93-106.

j14. Sturges, R.H., 1994. "A Review of Teleoperator Safety," *Int'l Journ. of Robotics and Automation,* Vol. 9, No. 4, Nov, 1994, pp 175-187.

j15. Reed, R.G., & Sturges, R.H., 1994. "A Model for Performance-Intelligent Design Advisors," *Int'l Journ. of Concurrent Engineering: Research & Applications (CERA),* Vol. 2, No. 3, Sept. 1994.

j16. Sturges, R.H., 1995. "Design of a Vernier Punch and Die Set for Single-Minute Bending Set-Ups," *Journal of Mechanical Design.* Vol 117, No. 3, pp 396-401.

j17. Sturges, R.H., and Laowattana, S., 1995. "Virtual Wedging in Three Dimensions," *Journal of Mechanical Design.* Vol 118, No. 1, pp 99-105.

j18. Sturges, R.H., & Laowattana, S., 1995."Design of an Orthogonal Compliance for Polygonal Peg Insertion," *Journal of Mechanical Design.* Vol 118, No. 1, pp 106-114.

j19. Sturges, R.H., Kilani, M., and O'Shaughnessy, K., 1995. "A Computational Model of Conceptual Design Based on Extended Function Logic" *AI EDAM.* Vol. 10, pp. 255-274.

j20. Elkins, K. & Sturges, R.H., 1996. "In-Process Angle Measurement and Control for Sheet Metal Manufacture," *Journ. of Intelligent Manufacturing.* Vol. 7, No. 3, pp 177-187.

j21. Roston, G. & Sturges, R.H., 1996. "Genetic Algorithm Synthesis of Four-bar Mechanisms," *AI EDAM,* Vol. 10, pp. 371-390.

j22. Sturges, R.H. & Hunt, D.O., 1996."Acquisition Time Reduction through New Design for Assembly Heuristics," *Journ. of Engineering Design.* Vol. 7 No. 2, Spring, 1996, pp 195-208.

j23. Roston, G. & Sturges, R.H., 1996. "Using the Genetic Design Methodology for Structure Configuration," *Microcomputers in Civil Engineering.* Vol. 11 , No. 3, pp. 175-184.

j24. Sturges, R.H., Laowattana, S., & Sathirakul, K, 1996. "Directly Visualizing Spatial Freedom from Solid Models," *International Journal of Robotics Research.* Vol 15, No. 5, pp. 505-521.

j25. Wang, C-H., & Sturges, R.H., 1996. "Preliminary Process Planning with Concurrent Multiple Representations of Parts," *Journ. of Intelligent Manufacturing.* Vol 7, pp 133-144.

j26. Sturges, R.H., & Sathirakul, K., 1998. "Jamming Conditions for Multiple Peg and Hole Assemblies," *Robotica,* Vol. 16 pp. 329-345.

Exhibit 1009-00066

j27. Elkins, K. & Sturges, R.H., 1999 “Non-Iterative Control of Small Radius Bend Angle.” *SME Journal of Manufacturing Processes.* Vol 1, No 1, pp. 18-30, May 1999.

j28. Elkins, K. & Sturges, R.H., 1999 “Springback Analysis and Control in Small Radius Air Bending,” ASME *Journal of Manufacturing Science and Engineering.* Vol. 121, No. 4, pp. 679-688.

j29. Sturges, R.H., & Laowattana, S., “Constraint Network Analysis of Three Dimensional Insertion Tasks,” *Journal of Intelligent Manufacturing.* Volume 13, No. 1, February 2002, pp 19 – 38

j30. Elkins, K. & Sturges, R.H., “Design of a Sensor for On-Line Measurement of Loaded Bend Angle for Pressbrake Control,” *Journal of Flexible Automation and Intelligent Manufacturing.* December 2000.

j31. Ayyadevara, V. R., Bourne, D.A., Shimada, K., and Sturges, R.H., "Interference-free Polyhedral Configurations for Stacking" IEEE Transactions on Robotics and Automation, Vol.18, No.2, Apr 2002, pp 147-165

j32. Babiceanu, R. F., F. Frank Chen, Robert H. Sturges, “A Framework for Control of Automated Material Handling Systems using the Holonic Manufacturing Approach,”. accepted by the *International Journal of Production Research* (IJPR). Scheduled for publication: August 2004

j33. Sturges, R.H., 1999 "Myth and Value in Conceptual Design" accepted by *Journal of Flexible Automation and Intelligent Manufacturing.*. Publication date uncertain due to merger of the Journal.

j34. Sturges, R.H., & Sathirakul, K., “Multiple Peg Assembly Analysis through a Partitioning of the Jamming Space,” accepted *Journal of Applied Mechanisms and Robotics.* April, 2000.

j35. Sturges, R.H., & Sathirakul, K., "Solving Off-Axis Peg-In-Hole Insertion Problems With An RRR Compliant Mechanism" accepted *Journal of Applied Mechanisms and Robotics.* April, 2000.

j36. Kanarat, A. and Sturges, R. H., “Motion planning for nonholonomic mobile robots under control uncertainty,” *Computer-Aided Design and Applications,* Vol. 1 Nos. 1-4, 2004, CAD ’04, pp tbd

j37. Anderson, R. and Sturges, R. H., “The Use of Behavior in the Design of Complex Systems” *Computer-Aided Design and Applications,* Vol. 1 Nos. 1-4, 2004, CAD ’04, pp tbd

j38. R. F. Babiceanu, F. F. Chen and R. H. Sturges, "Real-Time Holonic Scheduling of Material Handling Operations in a Dynamic Manufacturing Environment," Robotics and Computer Integrated Manufacturing, 2004, (accepted 8/2004).

Exhibit 1009-00067

j39. R. F. Babiceanu, F. F. Chen and R. H. Sturges, "A Framework for Control of Automated Material Handling Systems Using the Holonic Manufacturing Approach," International Journal of Production Research, Vol. 42, No. 17, 2004.

j40. R. F. Babiceanu, F. F. Chen, and R. H. Sturges (2005) "The influence of material handling operations on the schedule makespan in manufacturing cell environments" *Transactions of NAMRI/SME*, Volume 33.

j41. Wiedmann, S., & Sturges, R.H., "A Full Kinematic Model of Thread-Starting for Assembly Automation Analysis", ASME Journal of Mechanical Design.Vol. 128:No. 1 pp 116-127

j42. Wiedmann, S., & Sturges, R.H., "Spatial Kinematic Analysis of Threaded Fastener Assembly", ASME Journal of Mechanical Design.Vol. 128:No. 1 pp 128-136

j43. Musa, R, Sturges, R.H., & Chen F.F. (2006) "Process Capability Allocation in the Extended Enterprise Environment" *Transactions of the NAMRI/SME*, Volume 34, pp tbd.

j44. Fong, N., & Sturges R.H., "A Control Design Strategy of a Reconfiguration Manufacturing System" accepted with revisions, *International Journal of Manufacturing Technology and Management* (IJMTM).

j45. Fong, N.H., Sturges, R.H & Shewchuk, J. "Dynamic Modeling of Multi-Stage Feedback Control Manufacturing Systems" *International Journal of Manufacturing Research (IJMR)* - special issue on "Innovation in Manufacturing", Vol.2, No.3, 2007.

j46. Fong, N.H., & Sturges, R.H., "Complex Plane Design Strategy for a Responsive Lean Manufacturing System", *International Journal of Computer Applications in Technology* (IJCAT) Vol 34 No. 3, 2009.

j47. Chaudhari, Gaurav S., Sturges, Robert H., Sandu, Corina, "Impact of combined feedback-feedforward control based ordering policies on supply chain stability and responsiveness", accepted by *Systems Research and Behavioral Science*, 2011, pp-tbd.

j48. Daniel W. Steeneck , Timothy C. Krometis, Robert H. Sturges, "A Procedure for Using Ship Tow-tank Data to Simulate Ship Motion and Inclusion of Perturbations", *Computing Science and Technology International Journal* (*CSTIJ*), Vol. 2, No. 4 (September, 2012) ISSN 2162-0660 (print) ISSN 2162-0667 (on-line).

j49. David B. Bateman, Igor A. Zamlinsky, and Robert H. Sturges, "Controller and Platform Design for a Three Degree of Freedom Ship Motion Simulator", *Computing Science and Technology International Journal* (*CSTIJ*), Vol. 2, No. 3 (September, 2012) ISSN 2162-0660 (print) ISSN 2162-0667 (on-line).

j50. Sturges, R.H., " Real-World Automation Control through the USB Interface". *Int'l Journ. of Engineering Inventions*, ISSN: 2278-7461, Vol. 2, No. 6, pp 48-56, April 2013.

Exhibit 1009-00068

j51. Anderson, R.J., & Sturges, R.H., "System Behaviors and Measures: Logical and State Complexity in Naval Weapons Elevators". *Complex Systems,* Vol 22, No. 3. pp 247-309

j52. Anderson, R.J., & Sturges, R.H., "System Behaviors and Measures: Compressed State Complexity and Number of Unique States Used in a Naval Weapons Elevators". *Complex Systems,* Vol 23, No. 1. pp 27-54, 2014

j53. Anderson, R.J., & Sturges, R.H., "Static Measures of Complexity in Naval Weapons Elevator System, Alternative Logic, and Mobile Carriage Systems". *Complex Systems,* Vol 23, No. 2. pp 149-176, 2014

j54. Sturges, R.H., "Material Removal by Arc Ablation". *Int'l Journ. of Engineering Science and Invention*, ISSN: 2319-6734, Vol. 3, No. 6, pp 1-6, June 2014.

j55. Sturges, R.H., "Simple and Inexpensive Hobbing for the General Shop". *Int'l Journ. of Engineering Inventions,* ISSN: 2278-7461, e-ISSN: 2278-7461, p-ISSN: 2319-6491, Volume 4, Issue 8 [January 2015] pp: 14-22.

j56. Ferrandez, S.M., Harbison, T., Weber, T., Sturges, R.H., Rich, R.K., "Optimization of a Truck-drone in Tandem Delivery Network Using K-means and Genetic Algorithm", *Journal of Industrial Engineering and Management,* JIEM, 2016 – 9(2): 73-89 – Online ISSN: 2013-0953 – Print ISSN: 2013-8423

Journal Papers In Review:

j57. Chaudhari, Gaurav S., Sturges, Robert H., Sandu, Corina, "On the Underlying Structure of System Dynamics Models", submitted for review for the Journal by *Systems Research and Behavioral Science.*.

j58. Lee, M, & Sturges, R.H., "Heat Transfer Modeling of Composite Fiber Tow in Fiber Placement", submitted for review for the Journal of Composites Part A.

j59. Lee, M, & Sturges, R.H., "Consolidation Modeling of Composite Fiber Tow in Fiber Placement", submitted for review to the Journal of Composites Part A.

j60. Kanarat, A. & Sturges, R. H., "Modeling and Simulation of a Multi-Unit Tracked Vehicle" , submitted for review to the Journal of Robotic Systems.

j61. Fong, N.H., Sturges, R.H. & Shewchuk, J. "DFSS of Production Control via Linear Control Methods" (UIIE-0293) submitted for review to IIE Transactions.

Peer- Reviewed Conference Papers:

c1. Sturges, R.H., 1989. "Task/Effector System Models of Dexterity for Machine Assembly," *IEEE Conf. on Intelligent Control*, Albany, NY, Sept, 1989.

Exhibit 1009-00069

c2. Sturges, R.H., and Kilani, M.I., 1990. "A Function Logic and Allocation Design Environment," *Proc. Industrial Process Control Conf. '90,* Detroit, MI, April, 1990.

c3. Sturges, R.H., Bourne, D.A., and Wang, W., 1990. "Real Time Interpretation of Acoustic Emissions in Milling," *Proc. Industrial Process Control Conf. '90,* Detroit, MI, April, 1990.

c4. Sturges, R.H., 1990. "A Rationale for Workholding Design," *Proc. Industrial Process Control Conf. '90,* Detroit, MI, April, 1990.

c5. Sturges, R.H., 1990. "Toward a Rational Workholding Methodology," *IEEE Int'l Conf. on Robotics and Automation,* Cincinnati, OH, May, 1990.

c6. Sturges, R.H., and Laowattana, S., 1991. "A Flexible Tendon-Controlled Device for Endoscopy," *IEEE Int'l Conf. on Robotics and Automation,* Sacramento, CA, April, 1991.

c7. Wong, J. H.-W., and Sturges, R.H., 1992. "An Extension of Design for Assembly Methods for Large and Heavy Parts," *ASME Japan-USA Symposium on Flexible Automation,* San Francisco, July 1992.

c8. Sturges, R.H., 1991. "Monitoring Milling Processes through AE and Tool/Part Geometry," *Proc. 4th World Meeting on Acoustic Emission,* Sept. 1991, Boston MA.

c9. Sturges, R.H., and Laowattana, S., 1992. "Virtual Wedging in Three Dimension Peg Insertion Tasks," *Proc. ASME 4th Flexible Assembly Systems Conf.,* Sept 1992, Phoenix, AZ, pp tbd..

c10. O'Shaughnessy, K., and Sturges, R.H., 1992. "A Systematic Approach to Conceptual Design," *ASME Fourth Int'l Conf. on Design Theory and Methodology,* Sept 1992, Phoenix, AZ, pp tbd.

c11. Wong, J. H.-W., and Sturges, R.H., 1992. "Design for Assembly Factors for Large and Heavy Parts," *Proc. ASME 18th Design Automation Conf.,* Sept 1992, Phoenix, AZ, pp tbd.

c12. Sturges, R.H., and Yang, J.-T., 1992. "Design for Assembly Evaluation of Orientation Difficulty Features," *Proc. ASME 18th Design Automation Conference,* Scottsdale, AZ, Sept. 13-16, pp tbd.

c13. Sturges, R.H., 1992. "Towards Computer-Aided Value Engineering," *Proc. Soc. American Value Engineers Conference -- 1992,* Phoenix, AZ, June 1992, pp tbd.

c14. Sturges, R.H., and Laowattana, S., 1992. "Virtual Wedging in Three Dimensional Peg Insertion Tasks," *IEEE Int'l Conf. on Intelligent Robots and Systems (IROS '92) ,* Raleigh, NC, July, 1992, pp tbd.

c15. Sturges, R.H., and Yang, J.-T., 1992. "Design for Assembly Evaluation of Orientation Difficulty Features," *Proc. ASME National Design Engineering Conference,* Chicago, Il, Feb 24-27, 92-DE-8.

Exhibit 1009-00070

c16. Sturges, R.H., 1992. "Stability Models for Analog Matrix Inversion," *Proc IASTED Conf on Control & Robotics,* Vancouver, BC, Aug 4-7, 92

c17. Sturges, R.H., 1992. "Accuracy Improvement for Analog Matrix Inversion," *Proc IASTED Conf. on Control & Robotics,* Vancouver, BC, Aug 4-7, 92

c18. Sturges, R.H., 1992. "A Computational Model for Conceptual Design," *Proc. AI in Design '92,* June 1992, Pittsburgh, PA, pp-tbd

c19. Sturges, R.H., 1992."An Approach to Zero Set-Up Panel Bending," *Proc. ASME 18th Design Automation Conference,* Scottsdale, AZ, Sept. 13-16, pp tbd.

c20. Wong, J. H.-W., and Sturges, R.H., 1992. "An Index of Difficulty for Manual Assembly of Large and Heavy Parts," *ASME PED Symp. on Concurrent Engineering,* 1992 Winter Annual Meeting.

c21. Sturges, R.H., and Yang, J.-T., 1992. "Design for Assembly Evaluation of Orientation Difficulty Features," *ASME PED Symp. on Concurrent Engineering,* 1992 Winter Annual Meeting.

c22. U. Flemming, S. Finger, J. Adams, C. Carlson, R. Coyne, S. Fenves, R. Ganeshan, J. Garrett, A. Gupta, Y. Reich, D. Siewiorek, R. Sturges, D. Thomas, R. Woodbury, 1992, "Form-Function Synthesis in Engineering Design," AAAI Fall Symposium Series, *Design from Physical Principles,* Cambridge, MA, October, 1992.

c23. Wang, C-H., & Sturges, R.H., "Concurrent Product/Process Design with Multiple Representations of Parts," *'93 IEEE Robotics & Automation Conf.,* Atlanta GA, May 2-7, 1993.

c24. Sturges, R.H., "The Function of Value Engineering," *9th International Conference on Engineering Design,* The Hague, The Netherlands, Aug 17-19, 1993.

c25. Sturges, R.H., & Reed, R.G., "An Application of Extended Function Logic to the Design of a Wearable Computer."*9th International Conference on Engineering Design,* The Hague, The Netherlands, Aug 17-19, 1993.

c26. Sturges, R.H., 1993. "The Function of Value Engineering," *ASME Design Automation Conference,* Albuquerque, NM, Sept 19-22, 1993.

c27. Reed, R.G., & Sturges, R.H., "A Model for Performance-Intelligent Design Advisors," *ASME Design Automation Conference,* Albuquerque, NM, Sept 19-22, 1993.

c28. Hunt, D.O. & Sturges, R.H., 1993. "Application of an Information-Based Design for Assembly Theory to Assembly Workstation Design," *ASME Design Automation Conference,* Albuquerque, NM, Sept 19-22, 1993.

c29. Sturges, R.H., and Laowattana, S., 1993. "A Spatial Freedom Representation Derived from Solid Models," *ASME Design Automation Conference,* Albuquerque, NM, Sept 19-22, 1993.

Exhibit 1009-00071

c30. Hunt, D.O. & Sturges, R.H., 1994."Detection and Evaluation of Planes of Partial Symmetry in CAD Models," *ASME Design Automation Conference,* Minneapolis, NM, Sept. 1994.

c31. Sturges, R.H. & Hunt, D.O., 1994."Acquisition Time Reduction through New Design for Assembly Heuristics," *ASME Design Automation Conference,* Minneapolis, NM, Sept. 1994.

c32. Sturges, R.H., and Laowattana, S., 1994. "Passive Assembly of Non-Axi-Symmetric Rigid Parts," *IEEE Int'l Conf. on Intelligent Robots and Systems (IROS '94)* , Germany, September 11-18, 1994.

c33. Sturges, R.H., and Laowattana, S., "A Voice-Actuated Tendon-Controlled Device for Endoscopy," *Medical Robotics and Computer Assisted Surgery Conference,* September 22-24, Sept. 1994 Pittsburgh, PA.

c34 Sturges, R.H., and Laowattana, S., 1994. "Polygonal Peg Insertion with Orthogonal Compliance," presented at *ASME Japan-USA Symposium on Flexible Automation,* Kobe, Japan, July 11-18, 1994. Also presented at the *5th ASME Conference on Flexible Assembly Systems,* Minneapolis, NM, Sept. 1994.

c35. Sturges, R.H., and Laowattana, S., 1995. "Fine Motion Planning through Constraint Network Analysis," *1995 IEEE Int'l Sym. on Assembly and Task Planning,* Aug 10-11, Pittsburgh, PA, pp. 160-170.

c36. Roston, G. and Sturges, R.H., 1995. "Genetic Design Methodology for Structure Configuration," 1995 *ASME Design Automation Conference,* Sept. 12-17 Boston, MA.

c37. Elkins, K. & Sturges, R.H., 1995. "Towards Flexible Sheet Metal Manufacture through In-Process Angle Measurement and Control," *ASME WAM, PED Symp. on Dimensional Measurement, Analysis and Control for Sheet Metal Forming and Assembly.* Dec. 1995.

c38. Ayyadevara, V, & Sturges, R.H., 1996. "Determination of Optimally Stable Position of a Sheet Metal Part for Automated Handling," *CSME Forum 1996, 13th Symp. on Engineering Applications of Mechanics,* McMaster University, Ontario, Canada, pp. 286-290.

c39. Sturges, R.H., & Sathirakul, K., 1996. "An Analysis of Multiple Peg and Hole Insertion Tasks," *ASME DTC/CIE96,* Irvine, CA, August, 1996.

c40. Kopp, A.-C., Sturges, R.H., Kalra, A., & Kekre, S., 1996. "Value Implications of Green Design," *ASME DTC/CIE96,* Irvine, CA, August, 1996.

c41. Kopp, A.-C., & Sturges, R.H., 1996. "An All-Shear Pad Spatial Remote Center Compliance Design," *Japan-USA Symposium on Flexible Automation,* Boston, MA July, 1996.

c42. Sturges, R.H., & Ayyadevara, V., 1996. "Analysis of Stability of Sheet Metal Parts for Automatic Handling," *Japan-USA Symposium on Flexible Automation,* Boston, MA July, 1996.

Exhibit 1009-00072

c43. Sturges, R.H., & Sathirakul, K., 1996. “Modeling Multiple Peg and Hole Insertion Tasks,” *Japan-USA Symposium on Flexible Automation,* Boston, MA July, 1996.

c44. Sturges, R.H., & Ayyadevara, V., 1997. "Automated Planning for Stacking of Bent Sheet Metal Parts," *Proc. ASME DETC’97,* Sept. 14-17, 1997, Sacramento, CA, access DFM4317. (CD-ROM)

c45. Sturges, R.H., & Sathirakul, K., 1997. "Jamming Conditions for Multiple Peg and Hole Assemblies," *Proc. ASME DETC’97,* Sept. 14-17, 1997, Sacramento, CA, access DFM4329. (CD-ROM)

c46. Sturges, R.H., & Sathirakul, K., 1997. "A Generalized Jamming Diagram for Assembly Analysis and Planning," *Proc. IASTED Conf. on Robotics and Manufacturing,* Cancún, Mexico, May 29-31, 1997, pp 291-296.

c47. Sturges, R.H., & Sathirakul, K., 1997. "Solving Off-Axis Peg-in-Hole Insertion Problems with an RRR Compliant Mechanism," *Proc. ASME Conf. on Flexible Assembly Systems,* Cincinatti, OH, Oct, 1997, pp tbd.

c48. Sturges, R.H., & Sathirakul, K., 1998. "Design Of An Isotropic Compliance Mechanism for Off-Axis Peg-In-Hole Insertion," *Proc. ASME DETC’98,* Sept. 13-16, 1998, Atlanta, GA, pp tbd.

c49. Sturges, R.H., & Sathirakul, K., 1999. “Compliance Design through Constraint Network Analysis” *Proc. Japan-USA Symposium on Flexible Automation*. Otsu, Japan, July 12-15, 1999, pp tbd.

c50. Marehalli, J.N. & Sturges, R.H., 1999. "Practical Passive Assembly: Gripper Design and Assembly Sequence Optimization", *Proc. ASME DETC’99,* Sept. 12-14, 1999, LasVegas, NV, CD-ROM: DETC99/DFM-8946

c51. Wiedmann, S.L. & Sturges, R.H., 1999. "Passive Assembly of Screws: Part I Modeling Screw Threads for Contact Analysis," *Proc. ASME DETC’99,* Sept. 12-14, 1999, LasVegas, NV, CD-ROM: DETC99/DFM-8975

c52. Sainani, M.R. & Sturges, R.H., 1999. "Quantifying Robotic Assembly Capability: A Review and a Prospectus," *Proc. FAIM '99,* June 23-25, Tilburg, Netherlands.

c53. Marehalli, J.N. & Sturges, R.H., 1999. "Optimization of Assembly Paths Through Quantifying Assembly Difficulty," *Proc. FAIM '99,* June 23-25, Tilburg, Netherlands.

c54. Ayyadevara, V.R., Bourne, D.A., Shimada, K., & Sturges, R.H., 1999. "Determining Near Optimal Interference-free Polyhedral Configurations for Stacking," IEEE ISATP, July 21-24, Porto, Portugal.

c55. Kanarat, A. & Sturges, R.H., 2000. "Modeling Of A Multi-Unit Tracked Vehicle," *Proc. Japan-USA Symposium on Flexible Automation*. Ann-Arbor, MI, July 24-26, 2000, pp tbd.

Exhibit 1009-00073

c56. Varadhan, A. & Sturges, R.H., 2000. "A Software Based Hierarchical Real Time Control System for Rapid Development of Mobile Robot Prototypes," *Proc. Japan-USA Symposium on Flexible Automation*. Ann-Arbor, MI, July 24-26, 2000, pp tbd.

c57. Marehalli, J. & Sturges, R.H., 2000. "Recognition of Contact States – Validation of Planning with Principal Contacts," *Proc. ASME DETC'00,* Sept. 10-13 2000, Baltimore MD, CD-ROM: DETC2000/DFM-tbd

c58. Wiedmann, S. & Sturges, R.H., 2000. "Kinematic Analysis Of Threaded Fastener Assembly In 3 Dimensions," *Proc. ASME DETC'00,* Sept. 10-13 2000, Baltimore MD, CD-ROM: DETC2000/DFM-tbd

c59. Abbott, M.W., & Sturges, R.H., 2001 "Towards Massively Parallel MEMS Assembly", *Proc. ASME DETC'01*, September 9-12, 2001 Pittsburgh, PA

c60. Kanarat, A. & Sturges, R.H., 2002. "Autonomous Haulage Vehicle," *Proc. Japan-USA Symposium on Flexible Automation*. Hiroshima, Japan, July 15-17, 2002, pp tbd.

c61. Moutran, S, & Sturges, R.H., 2002. "Mapping the Effective Workspace of a 6-dof Articulated Robot for Fiber Placement," *Proc. Japan-USA Symposium on Flexible Automation*. Hiroshima, Japan, July 15-17, 2002, pp tbd.

c62. Lee, M. & Sturges, R.H., 2002. "Robotic End - Effector Design Basis For Composite Fiber Placement," *Proc. Japan-USA Symposium on Flexible Automation*. Hiroshima, Japan, July 15-17, 2002, pp tbd.

c63. Anderson, R., & Sturges, R.H., 2002. "A case study in extended value engineering", *Proc. ASME DETC'02* Sept. 29-Oct.2, 2002 Montreal, Canada

c64. Moutran, S., & Sturges, R.H., 2002. "Process design for the automation of online-consolidation composite fiber placement", *Proc. ASME DETC'02* Sept. 29-Oct.2, 2002 Montreal, Canada

c65. Abbott, M.W., & Sturges, R.H., 2002 "Robotic Compliance Analysis For Composite Material Processing Part I", *Proc. ASME IMECE 2002* November 17 - 22, 2002 New Orleans, LA

c66. Wongwanich , Y., & Sturges, R.H., 2002 "Design For Assembly Methods For Large And Heavy Plates", *Proc. ASME IMECE 2002* November 17 - 22, 2002 New Orleans, LA

c67. Fong, N.H., Shewchuk J.. P., and Sturges R. H, "Classical Control Theory Analysis of a Lean Manufacturing System", Proceedings Industrial Engineering Research Conference (IERC), May 15-19, 2004, Houston, TX, *"Best Paper Award in Manufacturing Systems"*

Exhibit 1009-00074

c68. Munki Lee, J. Choi, and Robert H. Sturges, "Composite Heat Transfer Analysis in Contact with a Rigid Heater for Fiber Placement ", SAMPE Symposium & Exhibition, May 16-20, 2004. *Nominated for Best Paper*

c69. Fong, N.H., Sturges R. H., and Shewchuk J. P., "Understanding System Dynamics via Transfer Function in Modeling Production Control Systems," Proceedings 14th International Conference on Flexible Automation and Intelligent Manufacturing (FAIM 04), July 12-14, 2004, Toronto, Ontario, Canada

c70. Fong, N.H., and Sturges R. H., "Modeling and Design of a Responsive Manufacturing System Using Classical Control Theory and Six-Sigma Methodology" Proceedings 58th Annual Quality Congres, May 24-26, 2004, Toronto, Ontario, Canada. *Awarded "Best Student Paper"*

c71. Radu F. Babiceanu, F. Frank Chen, Robert H. Sturges, "Reactive Scheduling of Material Handling Devices using the Holonic Control Approach," Proceedings of the 14th International Conference on Flexible Automation & Intelligent Manufacturing (FAIM 2004), Toronto, Canada.

c72. Radu F. Babiceanu, F. Frank Chen, Robert H. Sturges, "Internal Agent Architecture for Agent-Based Material Handling Systems," Proceedings of the Industrial Engineering Research Conference (IERC 2004), Houston, Texas.

c73. Kanarat, A. and Sturges, R. H., "Motion planning for nonholonomic mobile robots under control uncertainty," CAD' 04 International CAD Conferences and Exhibitions, May 24-28, 2004. Pattaya, Thailand

c74. Kanarat, A. and Sturges, R. H., "Robust Path Planning and Following for Mobile Robots under Uncertainties: A Control Uncertainty Field Approach," Proceedings of the 14th International Conference on Flexible Automation & Intelligent Manufacturing (FAIM 2004), Toronto, Canada.

c75. Junghun Choi, and Robert H. Sturges, "Preliminary Element Design and Analysis of a Smart Endoscope", Flexible Automation & Intelligent Manufacturing, Toronto, Canada, July 12-14, 2004.

c76. Junghun Choi, and Robert H. Sturges, "Design and Simulation of a Smart Endoscope", Intelligent Manupulation and Grasping, Genoa, Italy, July 1-2, 2004.

c77. Junghun Choi, and Robert H. Sturges, "Design and Simulation of a Smart Endoscope: Part 2", ASME International Mechanical Engineering Congress and RD&D Expo ,Anaheim, California, Nov. 13-19, 2004.

c78. Sturges, R. H. , Loos, A, and Viehland, D., "Processing of Composites" Proceedings International Conference On Composites/Nano Engineering , ICCE-10, July 20-26, 2003 New Orelans, LA

Exhibit 1009-00075

c79. Munki Lee, Junghun Choi, and Robert H. Sturges, “Modeling Contact Heat Transfer for Composite Fiber Placement “, Japan-USA Symposium on Flexible Automation, July 19-21, 2004. Denver, CO, *Awarded “Best Paper”*.

c80. Munki Lee, J. Choi, and Robert H. Sturges, “Process Design for Composite Fiber Placement with a Solid Contact Heat Source “, Flexible Automation & Intelligent Manufacturing, Toronto, Canada, July 12-14, 2004.

c81. Anderson, R. and Sturges, R. H., “The Use of Behavior in the Design of Complex Systems” CAD’ 04 International CAD Conferences and Exhibitions, May 24-28, 2004. Pattaya, Thailand

c82. Anderson, R. and Sturges, R. H., “Inherent Behavior in Complex Systems”, Japan-USA Symposium on Flexible Automation, Denver, CO, July 19-21, 2004.

c83. Babiceanu, R. F., F. F. Chen, and R. H. Sturges "The influence of material handling operations on the schedule makespan in manufacturing cell environments" NAMRC 33. 24-27 May 2005, Columbia University, New York

c84 Musa, R, Sturges, R.H., & Chen F.F. “Process Capability Allocation in the Extended Enterprise Environment” NAMRC 34 (Marquette University, May 23-26, 2006)

c85. Anderson, R. and Sturges, R. H., “Quantified Behavior as an Optimization Algorithm” CAD’06 International CAD Conferences and Exhibitions, Jun 19-23, 2006. Phuket, Thailand

c86. Anderson, R. And Sturges, R. H., “Characterization Of Performance, Robustness, And Behavior Relationships In Adaptable Systems”, Int’l Symposium On Flexible Automation, Osaka, Japan, July 10-12, 2006.

c87. Musa, R, Sturges, R.H., & Chen F.F. “Dynamic Variation Reduction Technique in Assembly Lines after Batch Inspection”, Int’l Symposium On Flexible Automation, Osaka, Japan, July 10-12, 2006.

c88. Musa, R. and Sturges, R. H., “Agile Inspection Planning Based on CAD-Data” CAD’06 International CAD Conferences and Exhibitions, Jun 19-23, 2006. Phuket, Thailand

c89. Sturges, R. H., “A CAD Approach to Upper-Bound Solutions” CAD’06 International CAD Conferences and Exhibitions, Jun 19-23, 2006. Phuket, Thailand

c90. Musa, R, Sturges, R.H., & Chen F.F. “Comprehensive Inspection Planning for Newly Launched Products in Assembly Lines Using CAD Data” IERC 2006 Orlando, FL, May 20-24, 2006)

c91. Chaudhari, G.S., Sturges, R.H, Sandu, C., "On the underlying structure of system dynamics models", Proceedings of the 27th International Conference of the System Dynamics Society, Albuquerque, NM (2009).

Exhibit 1009-00076

C. *Other Conference Papers (not peer reviewed, or reviewed by abstract):*

a1. Sturges, R.H., 1982. "A Sheet Metal FMS Simulation System," *FABTECH Proceedings*, Chicago, IL, February.

a2. Sturges, R.H., 1984. "A Wire Harness Flexible Manufacturing System," *Autofact 6 Proceedings,* Anaheim CA, October.

a3. Sturges, R.H., 1987. "The Design for Assembly Calculator," *EMACTECH Proceedings,* Pittsburgh, PA, May.

a4. Sturges, R.H., 1989. "Toward Achieving Dexterity in Flexible Assembly Systems," *16th NSF Conf. on Manufacturing Systems,* Arizona State University, Jan 1990.

a5. Sturges, R.H., 1991. "A Kinematic Approach to Teleoperator Safety," *17th NSF Conf. on Manufacturing Systems,* University of Texas at Austin, Jan 1991.

a6. Sturges, R.H., 1991. "Workholding and Design for Manufacture," *17th NSF Conf. on Manufacturing Systems,* University of Texas at Austin, Jan 1991.

a7. Wong, J. H.-W., and Sturges, R.H., 1992. "An Extension of Design for Assembly Methods for Large and Heavy Parts" *18th NSF Conf. on Manufacturing Systems,* Georgia Institute of Technology, Jan 1992.

a8. Kilani, M. I., and Sturges, R.H., 1992. "Detection and Evaluation of Orientation Features for CAD Part Models" *18th NSF Conf. on Manufacturing Systems,* Georgia Institute of Technology, Jan 1992.

a9. Sturges, R.H., and Laowattana, S., 1992. "Virtual Wedging in Three Dimensions," *18th NSF Conf. on Manufacturing Systems,* Georgia Institute of Technology, Jan 1992, pub. by SME, NY, NY.

a10. Sturges, R.H., and Kilani, M. I., 1993. "A Computer-Aided Function Logic Sketchpad," *19th NSF Conf. on Manufacturing Systems,* North Carolina State University, Jan 1993, pub. by SME, NY, NY.

a11. O'Shaughnessy, K., and Sturges, R.H., 1993. "A Systematic Approach to Conceptual Design," *19th NSF Conf. on Manufacturing Systems,* North Carolina State University, Jan 1993, pub. by SME, NY, NY.

a12. Sturges, R.H., 1993. "A Computational Model for Conceptual Design," *19th NSF Conf. on Manufacturing Systems,* North Carolina State University, Jan 1993, pub. by SME, NY, NY.

a13. Sturges, R.H., and Hunt, D., 1993. "Application of DfA Theory to Optimal Assembly Workstation Design," *19th NSF Conf. on Manufacturing Systems,* North Carolina State University, Jan 1993, pub. by SME, NY, NY.

Exhibit 1009-00077

a14. Sturges, R.H., and Laowattana, S., 1993. "Representations of Rotational and Translational Freedom with Extended Screw Theory," *19th NSF Conf. on Manufacturing Systems,* North Carolina State University, Jan 1993, pub. by SME, NY, NY.

a15. Sturges, R.H., and Laowattana, S., 1993. "A Voice-Controlled Flexible Device for Endoscopy," *Forum on Medical Robotics and Computer Assisted Surgery,* June 12, 1993, Pittsburgh, PA,

a16. Wang, C-H., & Sturges, R.H., 1994. "Concurrent Product/Process Design with Multiple Representations of Parts," *20th NSF Conf. on Manufacturing Systems,* MIT, Jan 1994, pub. by SME, NY, NY.

a17. Sturges, R.H., 1994. "The Function of Value Engineering," *20th NSF Conf. on Manufacturing Systems,* MIT, Jan 1994, pub. by SME, NY, NY.

a18. Reed, R.G., & Sturges, R.H., 1994. "A Model for Performance-Intelligent Design Advisors," *20th NSF Conf. on Manufacturing Systems,* MIT, Jan 1994, pub. by SME, NY, NY.

a19. Sturges, R.H., and Laowattana, S., 1994. "A Spatial RCC for Non-Axisymmetric Passive Assembly," *20th NSF Conf. on Manufacturing Systems,* MIT, Jan 1994, pub. by SME, NY, NY.

a20. Dao, H. &, Sturges, R.H., 1995. "Functional Representations of Conceptual and Preliminary Design"*21st NSF Conf. on Manufacturing Systems,* UCSD, Jan 1995, pub. by SME, NY, NY.

a21. Sturges, R.H., and Hunt, D., 1995. "Detection and Evaluation of Planes of Partial Symmetry in CAD Models,"*21st NSF Conf. on Manufacturing Systems,* UCSD, Jan 1995, pub. by SME, NY, NY.

a22. Sturges, R.H. & Hunt, D.O., 1995. "Reduction of Acquisition Time through New Design for Assembly Heuristics," *21st NSF Conf. on Manufacturing Systems,* UCSD, Jan 1995, pub. by SME, NY, NY.

a23. Kopp, A.-C., Sturges, R.H., Kalra, A., & Kekre, S., 1996. "Value Implications of Green Design: A Preliminary Progress Report," *22nd NSF Design & Manufacturing Grantees Conf.,* Albuquerque, NM, Jan 1996, pub. by SME, Dearborn, MI.

a24. Kopp, A.-C., & Sturges, R.H., 1996. "An All-Shear Pad Spatial Remote Center Compliance Design," *22nd NSF Design & Manufacturing Grantees Conf.,* Albuquerque, NM, Jan 1996, pub. by SME, Dearborn, MI.

a25. Sturges, R.H., & Ayyadevara, V., 1996. "Analysis of Stability of Sheet Metal Parts," *22nd NSF Design & Manufacturing Grantees Conf.,* Albuquerque, NM, Jan 1996, pub. by SME, Dearborn, MI.

Exhibit 1009-00078

a26. Kopp, A.-C., & Sturges, R.H., 1996. “Prismatic Peg and Hole Assembly Time Tests,” *22nd NSF Design & Manufacturing Grantees Conf.,* Albuquerque, NM, Jan 1996, pub. by SME, Dearborn, MI.

a27. Sturges, R.H., & Sathirakul, K., 1996. “Modelling Multiple Peg and Hole Insertion Tasks,” *22nd NSF Design & Manufacturing Grantees Conf.,* Albuquerque, NM, Jan 1996, pub. by SME, Dearborn, MI.

a28. Sturges, R.H., & Sathirakul, K., 1996. “Compliance Mechanism Design Methodolgy for Passive Assembly,” *22nd NSF Design & Manufacturing Grantees Conf.,* Albuquerque, NM, Jan 1996, pub. by SME, Dearborn, MI.

a29. Sturges, R.H., & Ayyadevara, V., 1997. “Analysis of Stability of Sheet Metal Parts for Automated Part Handling,” *Proc. 1997 NSF Design & Manufacturing Grantees Conf.,* Seattle, WA, Jan 7-10, 1997, pub. by SME, Dearborn, MI.

a30. Sturges, R.H., & Sathirakul, K, 1997. “An Analysis of Pen-in-Hole Insertion Tasks: Beyond Chamfer-Crossing,” *Proc. 1997 NSF Design & Manufacturing Grantees Conf.,* Seattle, WA, Jan 7-10, 1997, pub. by SME, Dearborn, MI.

a31. Sturges, R.H., & Ayyadevara, V., 1998. “Automated Planning for Stacking of Polyhedral Sheet Metal Parts,” *Proc. 1998 NSF Design & Manufacturing Grantees Conf.,* Monterrey, Mexico, Jan 5-7, pub. by SME, Dearborn, MI.

a32. Sturges, R.H., & Sathirakul, K, 1998. “Passive Assembly Approach To Off-Axis Peg-in-Hole Insertion,” *Proc. 1998 NSF Design & Manufacturing Grantees Conf.,* Monterrey, Mexico, Jan 5-7, pub. by SME, Dearborn, MI.

a33. Wiedmann, S. & Sturges, R.H., 1999. “Screw Insertion by Passive Asembly,” *Proc. 1999 NSF Design & Manufacturing Grantees Conf.,* Los Angeles, CA, Jan 4-6, pub. by SME, Dearborn, MI.

a34. Sainani, M. & Sturges, R.H., 1999. “Review of Robotic Manipulability Measures,” *Proc. 1999 NSF Design & Manufacturing Grantees Conf.,* Los Angeles, CA, Jan 4-6, pub. by SME, Dearborn, MI.

a35. Jayavardhan, M., & Sturges, R.H., 1999. "Sensor-Free Robotic Assembly" *Proc. 1999 NSF Design & Manufacturing Grantees Conf.,* Los Angeles, CA, Jan 4-6, pub. by SME, Dearborn, MI.

a36-a49. Fourteen (14) Technical Reports delivered as part of our Phase One activities for ONR, Panama City, FL.

D. *Sections or Chapters:*

Exhibit 1009-00079

1. Sturges, R.H., 1992. “Reliability and Safety in Teleoperation,” book chapter in *Safety, Reliability and Human Factors in Robotic Systems,* James H. Graham, editor, Van Nostrand-Reinhold, January 1992.

2. Sturges, R.H., and Laowattana, S., 1996. “A Voice-Actuated Tendon-Controlled Device for Endoscopy,” book chapter in *Computer Integrated Surgery,* R.H. Taylor, ed. MIT Press, pp. 603-617.

E. *Abstracts, Reviews:* None

F. *Other Writings:*

Theses:

Sturges, R.H., 1969. “Design Modifications of the ME Brailler,” SB-SM Thesis, MIT.

Sturges, R.H., 1986. “On Dexterity,” Ph.D. Dissertation, Carnegie Mellon University.

Industrial Course Notes:

Dorman, J.G., Sturges, R.H., and Brecker, J.N., 1986. "Design for Producibility," ©Westinghouse Electric Corp, Westinghouse Productivity and Quality Center, 1986.

Trade Journals:

Sturges, R.H., 1983. “Double the Apple II’s Color Choices,” *BYTE Magazine,* November, 1983.

CMU Publications:

Sturges, R.H., “Moving Body and Mind: From Industry to University,” *CIT,* Summer 1991.

Sturges, R.H., in “Motivating Students,” *University Teaching Center Newsletter,* Vol. 1, No. 2, S. Ambrose, Ed.

Selected Research Report Titles from Westinghouse Electric Corporation:

Please Note: The majority of the author's work between April 1974 and October 1987 is proprietary to the Westinghouse Electric Company and remain in their library. The selection below is representative of these works. Corporate departmental policy regarding listing of author’s names on research reports varied. Those titles without named authors for which the candidate is the sole or senior author are denoted with an asterisk.

w1. *“Nuclear Fuel Pellet Inspection Gaging System,” MRDD Report 76-8G8-HANFO-R1, 156pp., May 1977.

w2. *“Coupler Hand-Offs in Plug Weld Repair System,” 7J41-PLUGR-05C, 13pp, June, 1977

Exhibit 1009-00080

w3. *“Steam Generator Service Arm and Master Manipulator Design Report,” 7J42-FOLLO, 36pp, July 1977

w4. *“M/STI SAM Coupler Design Program,” 7J42-PRDES, 50pp, Sept 1977.

w5. *“Steam Generator M/STI SAM Coupler System,” 7J42-CPLTO, 19pp, Sept 1977.

w6. Sturges, R.H., 1978. “The Structurally-Efficient Manipulator,” Westinghouse R&D Center report 1J43-INHOS-R1.

w7. “Human Factors Assessment of the M/STI SAM Telerobot System” 1J43-FATIG, 70pp, January 1978.

w8. *“M/STI SAM Design Upgrading Program,” 7J43-UPGRA, 80pp, February 1978.

w9. Sturges, R.H., 1980. “Tubesheet Identification and Mapping,” Westinghouse R&D Center report 1J43-TIDMA-R1.

w10. Sturges, R.H., and Gerkey, K.S., 1980. “The Analytical, Experimental, and Design Studies of General Robotic Manipulators,” Westinghouse R&D Center report 1J43-KNUCL-R1.

w11. *“Automated Gaging System Study,” DQ-153, 35pp, June 1982.

w12. *“Wire Harness FMS Operator's Guide,” WPQC, 125pp, Sept 1987.

Research Memoranda from C. S. Draper Laboratories:

d1. Sturges, R.H., 1971. “Teleoperator Arm Design Program Principles of Operation,” MAT-33, 17 pp, Nov 1971.

d2. Sturges, R.H., 1972. “Teleoperator Arm Design Progress,” MAT-53, 11 pp, June 1972.

d3. Sturges, R.H., 1972. “On the Moving Base Problem,” MAT-54, 3pp, July 1972.

d4. Sturges, R.H., 1973. “Singularities and Redundancies of the PaR-3000 Jacobian,” MAT-80, 5 pp, January 1973.

d5. Sturges, R.H., 1973. “Six Degree of Freedom End-Effector Design,” MAT-113, 4 pp, March, 1973.

d6. Sturges, R.H., 1973. “Work Volume of a Revolute Arm,” MAT-133, 3pp, May, 1973.

d7. Sturges, R.H., 1973. “Optimization of Robot Link Parameters for Engine Assembly,” MAT-145, 5 pp, June 1973.

d8. Sturges, R.H., 1973. “Wrist Force Sensor Elasticity Analysis,” MAT-186, 4 pp, Dec, 1973.

Exhibit 1009-00081

d9. Sturges, R.H., 1974. “Wrist Force Sensor Mechanical Parameters,” MAT-211, 2 pp, March, 1974.

Research Reports from C. S. Draper Laboratories:

d10. Woodin, A.E., et al. 1972. “Annual Progress Report for the Development of Multi-Moded Remote Manipulator Systems No. 1,” C-3901, 146pp, January, 1972.

d11. Woodin, A.E., et al. 1973.“Annual Progress Report for the Development of Multi-Moded Remote Manipulator Systems No. 2,” C-3790, 174pp, January, 1973.

d12. Sturges, R.H., 1973. “Teleoperator Arm Design,” C. S. Draper Laboratories Report E-2746.

d13. Nevins, J.L., et al., 1974. “Exploratory Research in Industrial Modular Assembly,” R-800, 200pp, March, 1974.

d14. Nevins, J.L., et al., 1974. “A Scientific Approach to the Design of Computer Controlled Manipulators,” R-837, 180pp, August, 1974.

Other Reports:

o1. Sturges, R.H., & Nehring, R., 2008. "Process Mapping the LCS-1 IETM," 14 pp., Jan 2008.

o2. Sturges, R.H., Nehring, R., & Steeneck, D., 2008. "Work Measurement for the LCS-1 IETM," 110 pp., April 2008.

o3. Sturges, R.H., & Nehring, R., 2009. "Part Mating Science for the LCS-1," 14 pp., May 2009.

o4. Sturges, R.H., Nehring, R., & Steeneck, D., 2009. "Simple Task Analysis for the LCS-1," 8 pp., June 2009.

o5. Sturges, R.H., Nehring, R., & Steeneck, D., 2009. "Pareto Analysis for the LCS-1," 15 pp., April 2009.

o6. Sturges, R.H., & Steeneck, D., 2009. "Simple Task Analysis for the LCS-1," 15 pp., April 2009.

o7. Sturges, R.H., & Butler, K., 2009. "Materials Handling Analysis for the LCS-1," 14 pp., June 2009.

o8. Sturges, R.H., & Mayer, B., 2009. "Materials Handling Workshop Results," 18 pp., September 2009.

o9. Sturges, R.H., & Mead, P., 2009. "Sea State Simulation Theory," 3 pp., November 2009.

o10. Sturges, R.H., & Steeneck, D., 2009. "Cost-Time Profiling for the LCS-1," 13 pp., September 2009.

Exhibit 1009-00082

o11. Sturges, R.H., & Showalter, M., 2009. "Sea-State Simulator Design and Control," 66 pp., September 2009.

G. *Discussions:*

"Research Opportunities in Flexible Assembly," Panelist, ASME Design Technical Conferences, 14 Sept, 1992, Scottsdale, AZ

H. *Patents Awarded:*

Title	Number	Date
1. Remote Access Manipulator	4,168,782	09-25-79
2. Photoelectric Docking Device	4,295,740	10-20-81
3. Electromech. Display Apparatus	4,316,189	02-16-82
4. Pellet Inspection Apparatus	4,349,112	09-14-82
5. Surface Flaw Detection	4,377,238	03-22-83
6. Apparatus and method for classifying fuel pellets for nuclear reactor	4,448,680	04-15-84
7. Fuel Transfer Manipulator	4,485,067	11-27-84
8. Vernier Press Brake Die Set	4,489,587	12-25-84
9. Apparatus for Mapping...an Element within a Field of Elements	4,503,506	03-05-85
10. Manipulator ... for Decontaminating Nuclear Steam Generators	4,521,844	06-04-85
11. Wire Routing & Terminating Device	4,862,927	09-04-89
12. Apparatus for Assembly of Axisymm-etric and Non-Axisymmetric Rigid Parts	5,396,714	03-14-95
13. Flexible Steerable Device for Exploratory Procedures	5,759,151	09-03-97
14. Method and apparatuses for .... control of bending operations	5,761,940	06-09-98
15. Method and apparatuses for	6,292,716	09-18-01

Exhibit 1009-00083

.... control of bending operations

16. Automated continuous haulage system 7,076,346 07-11-06

GRANTS AND CONTRACTS

A. *Awarded to Date*

1. Analog Matrix Inversion, CMU Faculty Grant, $4,800, 1988-1990, Principal Investigator.

2. Design for Assembly Evaluation, Engineering Design Research Center. NSF Support: $243,000 from 1988 through 1994. Principal Investigator

3. Development of Smart Endoscopes, Center for Entrepreneurial Development, $15,000 in-kind; Pittsburgh Roboscope Co., PA, $17,000 in-kind; Advanced Technology Center of Western PA, $48,000; and, AT&T Foundation, $30,000, 1988-1989. Principal Investigator

4. Representation of Aircraft Design Data for Supportability, Operability, and Producibility Evaluations, Boeing Helicopter Company, $58,000, June 1989 - December 1989. Principal Investigator

5. The Teaching Factory, DARPA, General Motors, $35,000, 1988-1989. Co-Principal Investigator with Duane Adams (Computer Science), et al.

6. "1990 George Talman Ladd Award," Carnegie Mellon University, $3,000, 1990.

7. Design for Manufacture of the CMT, U.S. Post Office, Mellon Institute, $35,000, 1989-1990. Role: Principal Investigator

8. Intelligent Manufacturing Workcell, DARPA, CMU-RI. This co-PI granted $35,000. Co-Principal Investigator with David Bourne (Robotics)

9. Toward Achieving Dexterity in Flexible Assembly Systems, NSF Research Initiation, $60,000, September 1989 - August 1990. Principal Investigator

10. Function Logic Models of Design, AT&T Grant to EDRC, $12,500, 1990-1991. Principal Investigator

11. Research in Rapid Assembly and Part Design, NSF PYI, $312,500, August 1990 - July 1995. Principal Investigator

12. Design for Manufacture of the CMT, U.S. Post Office, Mellon Institute, $21,000, 1990. Principal Investigator

13. Mail Flow Analysis, U.S. Post Office, Mellon Institute, $10,000, 1990. Principal Investigator

Exhibit 1009-00084

14. An Intelligent Bending Workstation, U.S. Amada Corp, $55,000/year, July 1991 through June 1995. Co-Principal Investigator with D. Bourne (Robotics) and P. Khosla (ECE)

15. Devices for Advanced Laparoscopic Surgery, Mercy Hospital Foundation, $15,000, September 1991. (Awarded, but withdrawn due to change of personnel at Mercy Hospital.) Principal Investigator

16. Development of Smart Endoscopes, CMU Faculty Development, $2,000, August 1992. Principal Investigator

17. Value Chain Implications for Green Design, NSF Management of Technological Innovation Program, $200,000, October 1994 - September 1997. Co-Principal Investigator with S. Kekre and K. Srinivasan (GSIA)

18. Planning Assembly of Sheet Metal Products, U.S. Amada Corp., $75,000/year, January 1995 through May 1997. Co-Principal Investigator with D. Bourne (Robotics)

19. Grant for research in Design for Manufacture, Westinghouse Electric Corp, $21,000, December 1994. Principal Investigator

20. Total Passive Automatic Assembly, NSF DMII, May 1995 - April 1998, $260,000. Principal Investigator

21. Contact State Space: Automatic Generation, Reasoning and Search, NSF CISE/IRI: Robotics and Machine Intelligence, Sept. 1997-Aug 1999, Grant No. GPG/NSF 95-27, $225,000. Co-PI ($78,000) with Dr. Jing Xiao, PI, of UNC-Charlotte.

22. Mobile Bridge Carrier Guidance, Long-Airdox Corp. and Virginia CIT, Aug 1998-July 1999. $200,000. Principal Investigator

23. Green Engineering Curriculum Development, VT, Aug 1998-May 1999. $5,000. Principal Investigator

24. Environmentally Conscious Manufacturing, VT ReachOUT, Oct 1998-June 1999. $7,500. Principal Investigator

25. Continuous Miner and Battery Haulage Design, Long-Airdox Corp. and Virginia CIT, Aug 1999-July 2000. $200,000. Principal Investigator

26. Continuous Haulage and Battery Haulage Analysis & Manufacturing, Long-Airdox Corp. and Virginia CIT, Aug 2000-July 2001. $80,000. Principal Investigator

27. Non-Autoclave Composite Materials and Structures, NASA, through UNO/NCAM program, June 2001-March 2002. $389,000. Co-PI ($122,530)

28. Pre-Fabricated Steel Building Analysis, Future Steel Ltd., Ont. Canada, $27,900. Principal Investigator

Exhibit 1009-00085

29. Center for High Performance Manufacturing, Virginia CTRF, July 2001-2004. $4.35 million, one of 12 co-PI's ($77,161)

30. Advanced Weapons Elevator, Newport News Shipbuilding, March 2002-December 2002. $370,000. Co-PI with Virginia Consortium for Material Handling and logistics, ($50,000)

31. Non-Autoclave Composite Materials and Structures, NASA, through UNO/NCAM program, June 2002-March 2003. $200,000. Co-PI ($65,000)

32. Continuous Haulage and Battery Haulage Analysis & Manufacturing, DBT America, Jan 2002-May 2003. $12,500. Principal Investigator

33. Nat'l Center for Advanced Manufacturing/NASA, "Non-Autoclave Processing And Manufacture Of Large Reusable Aerospace Structures", co-PI with Al Loos, et al. (VT ESM), This co-PI responsible for $65,300 in Year 3 (July 03-March 04) due to cut-back in the program from original levels.

34. Center for High Performance Manufacturing, Virginia CTRF, July 2001-2004. $4.35 million, one of 12 co-PI's ($77,161)

35. CHPM Company Project: Bristol Compressor, PI, $49,875. (Aug 03-Feb 04)

36. CHPM Company Project: DBT Hillsville, PI, Aug 25 '03, $25,025. (Aug 03-Dec 03)

37. CHPM Company Project: Federal-Mogul, co-PI 25%, $27,975 + $12,102 cost sharing. (July 03-Dec 03)

38. DBT America, Pulaski Division, "Control of REACH System Vehicles,"2 projects initiated. 15 Aug 03, PI, $24,180; and 1 Jan 04, PI, $30,677. (Aug 03-Jun 04)

39. International Technologies of Pittsburgh, two gifts of $10,000 each, in December, 2003, and in April '04 "to support Professor Robert H. Sturges's research and laboratory work in Engineering Design and Manufacturing Processes."

40. CHPM Center Project: PI, $48,736 "Process Mapping and Cost-Time Profiling in Support of Lean Manufacturing". (July 04-July 05)

41. Titan Corp. PI, $110,000 "Designing and Defending Against Swarming Behavior", (Aug 04-May 05)

42. NSF, "Embodiment Awareness" Sub Fund $45,000; supporting Francis Quek, PI

43. CHPM Project "Strain Model" $8,000, PI, for Metalsa Corp.

Exhibit 1009-00086

44. Nat'l Center for Advanced Manufacturing/NASA, "Non-Autoclave Processing And Manufacture Of Large Reusable Aerospace Structures", co-PI with Romesh Batra, et al. (VT ESM), responsible for $22,000 in Year 5 (July 05-March 06).

45. Concoa, Inc., "New Product Design & Development", PI, $48,812 from Concoa, $26,765 State match, total = $75,487.

46. ONR, "Meeting Mandated Manning Requirements Through Effort Leveling", PI, $1,577,418; co-PI's Thurmon Lockhart and Roger Anderson; responsible for $981,318. (Jan 08-May 09)

47. ONR, "Meeting Mandated Manning Requirements Through Effort Leveling: Phase 2", PI, $745,404; co-PI Thurmon Lockhart; responsible for $372,702. (Jan 10-May 11)

48. TEMCI, "New Product and Process Development for SVI", PI, $80,000; responsible for $80,000. (June 2011, May 2012)

49. TEMCI, "Second Product and Process Development for SVI", PI, $80,000; responsible for $80,000. (June 2012, May 2013)

Total as PI: $4,556,069; Total in Research Projects $8,216,822 (Nov 1987 - present)

B. Proposals Pending total requested in FY 2011 = $880,000.

PROFESSIONAL ACTIVITIES

A. *Short Courses:*

1. "Design for Quality in Manufacturing," for the Carnegie Bosch Institute, Advanced Program for Technical Managers, 8 class contact hours: August 1991.

2. "Manufacturing Concerns in Design," for the Carnegie Bosch Institute, Advanced Program for Technical Managers, 12 class contact hours: August 1992.

3. "Design for Manufacture," for the Carnegie Bosch Institute, Advanced Program for Technical Managers, 12 class contact hours: August 1993.

4. "TQM and Design for Manufacture," for the Korean/GSIA Management Institute, Program for Technical Managers, 9 class contact hours: August 1995.

5. "Excellence in Manufacturing," for the Executive Education Network (EXEN) with CMU Graduate School of Industrial Administration, 3 class hours by direct satellite, with 2-way audio interaction. February 1996.

6. "Management of Technological Information," for the Executive Education Network (EXEN) with CMU Graduate School of Industrial Administration, 3 class hours by direct satellite, with 2-way audio interaction. March 1996.

Exhibit 1009-00087

7. “Excellence in Manufacturing,” for the Executive Education Network (EXEN) with CMU Graduate School of Industrial Administration, 3 class hours by direct satellite, with 2-way audio interaction. April 1997.

8. "Design For Assembly Workshop: Theory and Practice," for Long-Airdox Company, one day session, Blacksburg, Virginia, June, 1999

9. "Value Analysis Workshop: 8-16 UniHauler," for Long-Airdox Company, eight weekly 4-hour sessions, Blacksburg, Virginia, Aug.-Sept., 2000

10. “Design for Manufacture and Assembly,” for ABB, Ltd. one day sessions presented at Pine Tops, NC; Brno, Czech Rep.; Ratingen, Germany; Nashik, India; Cairo, Egypt; Sao Paulo, Brasil. 2004 - 2005

Seminars:

1. "Design for Assembly Methods," CMU Robotics Institute Colloquium, August, 1985.

2. “Robotic Dexterity,” Ben Franklin Institute, May, 1986.

3. “Human and Machine Dexterity,” CMU Mechanical Engineering Department Graduate Seminar, October, 1986.

4. “Design for Producibility.” METAC Symposium, January, 1989.

5. “Dexterity for Automated Assembly,” Ohio State University Mechanical Engineering Graduate Seminar Series, invited speaker, Nov 1989.

6. “Workholding and Design for Manufacture,” CMU Robotics Institute, April, 1990.

7. “Design For Assembly: Theory and Practice,” Ohio State University Mechanical Engineering Graduate Seminar Series, invited speaker, May 1990.

8. “Design for Manufacture,” Lord Corporation, Erie, PA, November, 1990.

9. “A Flexible Tendon-Controlled Device for Endoscopy,” CMU Robotics Institute, March, 1991.

10. “Functional Process Planning for DfM,” CMU Robotics Institute, October, 1991.

11. “Information Content in Design for Manufacture,” CMU Engineering Design Research Center Seminar Series, November, 1991.

12. “Design for SMED in Sheet Metal Fabrication,” CMU Engineering Design Research Center Seminar Series, March 5, 1992.

Exhibit 1009-00088

13. “Design for Manufacture,” CMU Post College Professional Education Program for Technical Managers, March 20, 1992.

14. “Single-Minute Bending Set-Ups with a Vernier Punch and Die Set,” CMU Robotics Institute, March 31, 1992.

15. “Design for Manufacture: Is There Any Other Way?” CMU College of Fine Arts Seminar Series, April 20, 1992.

16. “Applications of Symmetry to Sheet Metal Part Design and Manufacture,” CMU Robotics Institute, June 23, 1992.

17. “Getting the Design Process Started,” CMU Engineering Design Research Center Seminar Series, June 24, 1992.

18. “Flexible Assembly Systems,” for the EC Researchers, EC/US Collaboration on Advanced Manufacturing, at EDRC, October 27, 1992.

19. "An Advisor for Designing a Process and a Process for Designing an Advisor," CMU Engineering Design Research Center Seminar Series, DfM Lab, 9 Feb 1993.

20. “Passive Assembly,” CMU Mechanical Engineering Department Graduate Seminar, November, 1993.

21. “Design For Assembly: Product and Process,” Ohio State University Mechanical Engineering Graduate Seminar Series, invited speaker, April 1994.

22. “Automating the Planning of Sheet Metal Products,” CMU Robotics Institute, May 23, 1994.

23. “Assembly Strategy 2000,” EARN Program Speaker, 25 May, 1994. Also presented at the Production Engineering Research Labs of Hitachi, Ltd., Himeji, Japan, 18 July 1994.

24. “Design for Manufacture: Myths and Realities,” CMU Mechanical Engineering Department Graduate Seminar, April, 1995.

25. “Passive Assembly,” University of Pittsburgh Mechanical Engineering Department Graduate Seminar, October, 1995.

26. "Getting it All Together: Modern Manual and Machine Assembly Measurement," SPQA, Virginia Forum for Excellence, Workshop 6, April 29, 1998, Richmond, VA.

27. “Modern Optimization Methods in Design,” invited seminars at KMIT, Thonburi, and KMUT, Ladkrabang, Bangkok, Thailand, 2006.

28. “Collaborative Automotive Design” for International Co-op program with IESTM, Monterrey Mexico, Fall 2007.

Exhibit 1009-00089

29. "Robotic Safety Considerations" for ASSE, Roanoke, VA, 5 March 2010.

30. "The Next Killer App" for ISE Department, VT, 21 October 2011.

Videotape Productions:

“Design for Manufacture,” 10:00, June 1986.
“Design for Assembly Calculator,” 16:15, July 1986.
“Voice-controlled Flexible Endoscope,” 2:35, June 1989.
“Smart Endoscope Development at CMU,” 4:25, Feb 1991.
“Model Mail Culler Demonstration,” 3:32, April, 1991.
“24-101 Introduction,” 11:00, August, 1991.
“24-101 Lecture Series,” approx 6 hours, April 1992.
“Spatial Remote Center Compliance,” 4:10, September 1992.
“24-101 Live Steam Challenge,” Part I, 4:02, October 1992.
“24-101 Live Steam Challenge ‘92,” Part II, 3:50, December 1992.
“Passive Assembly,” 10:30, November, 1993.
“Flexible Gripper for Sheetmetal Handling,” 2:50, December, 1994.
“Rational VHS Cassette Design,” 5:00, April 1995.
“Passive Assembly of Multiple Pegs and Screws,” 4:00, July, 1996.
“This is ISE Manufacturing," 35:20, August, 2000
“Shop Hobbing,” 18:10, September 2008
"Sea-State Simulator Platform" 4:00, October 2010
"TruTrac Model Operation" 18:00, February 2012

B. *Government Committees:*
1. “NSF Workshop on Computer Assisted Surgery,” 28 Feb - 2 Mar 1993, Wash. DC, Plenary Session Speaker.
2. NSF DDM Proposal Review Panel, April 27-28, 1993, Wash. DC.
3. NSF DMII Proposal Review Panel, April 25-26, 1995, Wash. DC.
4. NSF IIS Proposal Review Panel, September 1998, remote.

C. *Memberships:*
Sigma Xi, Member.
ASME, Member
IIE, Member
Westinghouse Engineer’s Society, President 1978.

D. *Editorial Roles:*
Reviewed Papers for:

Advances in Engineering Software
AI EDAM
ASME Design Theory & Methodology Conferences
ASME Japan-USA Conf. on Flexible Automation
ASME Journal of Engineering for Industry

Exhibit 1009-00090

ASME Journal of Engineering Materials and Technology
ASME Journal of Mechanical Design
ASME Manufacturing Review
Computing Systems in Engineering
FAIM Transactions
IEEE Control Systems Society
IEEE Expert
IEEE International Robotics and Automation Conferences
IEEE Trans. on Control Systems Technology
International Journal of Robotics Research
Journal of Computer Aided Design
Mechatronics
International Journal of Solids and Structures
Journal of Engineering Design

E. *Professional Awards:*

Professional Engineer, Commonwealth of Pennsylvania, certificate number PE-041434-E, Jan 1991.

"1990 George Talman Ladd Award," recognizing excellence in research for a young faculty member, Carnegie Mellon University.

"1990 Presidential Young Investigator," National Science Foundation.

"B.G. Lamme Fellowship," Westinghouse Electric Corp., 1984.

"Silver Signature Award," Westinghouse Electric Corp., 1983, for the development of the Wire Harness Flexible Manufacturing System.

"Engineering Achievement Award," Westinghouse Productivity and Quality Center, Oakdale, PA, 1982, for the development of the Mobile Interactive Terminal.

"Dean's Teaching Excellence Award," Virginia Tech, April 2005.

F. *Service/Committees:*

CMU:
- Manufacturing Strategy Task Force (1988-91)
- Xerox CMU Challenge TQM Program (June 1992)
- Interdisciplinary Design MS Program Planning Committee (1992)
- Faculty Development Committee (1992-93)
- MSMEM Degree Program Development (1992-93)
- Multidisciplinary MS Design Program Development (1992)
- ESL Oral Examinations Workshop (1994)

Carnegie Institute of Technology, Mechanical Engineering:
- Departmental Undergraduate Committee (1988-89)

Exhibit 1009-00091

Departmental Seminar Program Coordinator (1988-89)
Departmental Graduate Committee, Graduate Applications Coordinator (1989-90), Design Curriculum Subcommittee
Coordinator (1990, 1991), Qualifying Exam Coord (93)
Departmental Faculty Search Committee (1989-90, etc.)
Departmental Freshman Course Committee (1990-91, 94-95)
Departmental Undergraduate Committee (1993-95)

VPI&SU, Industrial & Systems Engineering:
Awards Committee (1997-2004)
Undergraduate Honor Board Panelist (2000-2008)
Graduate Honor Board Panelist (2007-2008)
AdHoc P&T Committee (2004-2005)
VPI&SU, Mechanical Engineering:
Formula SAE Team Advisor (1998-2000)
Graduate Program Committee (1999-2001)
VPI&SU, College/University:
Engineering Faculty Organization, member (1998-present)
Engineering Faculty Organization, Chair (2001-present)
College of Engineering Commencement Committee, General Marshall
College of Engineering Green Engineering Program Steering Committee
College of Engineering Undergraduate Curriculum Committee
Commission on Undergraduate Curriculum
Commission on Undergraduate Studies And Policies
Intellectual Property Committee

IEEE: Session Chair "Integration and CAD/CAM," *Third Int'l Conf. on Computer Integrated Manufacturing*, RPI, Troy, NY, May 1992.

ASME:

1. Session Chair, "Machining and Manufacturing Processes," *ASME 18th Design Automation Conference*, Scottsdale, AZ, Sept. 15, 1992
2. Panelist, "Research Opportunities in Flexible Assembly," *ASME 18th Design Automation Conference*, Scottsdale, AZ, Sept. 14, 1992
3. Session Chair, "Concurrent Engineering," *ASME 19th Design Automation Conference*, Albuquerque, NM, Sept. 20, 1993
4. Program Committee, *Japan-USA Symposium on Flexible Automation*, Boston, MA, July, 1996.
5. ASME Student Design Contest Committee, 1997-2000.
6. Program Committee, and Session Chair,*3rd ASME-DFM Conference*, Atlanta, GA, Sept. 13-16, 1998.
7. Conference Chair, *4th ASME-DFM Conference*, Las Vegas, NV, Sept. 12-14, 1999.
8. Program Committee, and Session Chair, *5th ASME-DFM Conference*, Baltimore, MD, Sept. 11-13, 2000.
9. ASME DFM Committee, Vice Chair, 1999-2001
10. Program Committee, *Japan-USA Symposium on Flexible Automation*, Denver CO,, July, 2004.

Exhibit 1009-00092

11. Session Chair CAD' 04 International CAD Conferences and Exhibitions, May 24-28, 2004. Pattaya, Thailand
12. Session Chair CAD' 06 International CAD Conferences and Exhibitions, Jun 19-23, 2006. Phuket, Thailand

SME: Student Section Advisor, 2007-2009, 2009,-2011

Other:

"NSF Workshop on Computer Assisted Surgery," 28 Feb - 2 Mar 1993, Wash., DC. Plenary Session Speaker.

"First Int'l Symposium on Medical Robotics and Computer Assisted Surgery," Pittsburgh, PA, 22-24 Sept 1994, Program Committee.

Mentor in "The LiNC Project": a joint research effort on behalf of the National Science Foundation Networking Infrastructure for Education program between Virginia Tech and Montgomery County Public Schools, Spring 1999.

Mentor for International Co-op program with IESTM, Monterrey Mexico, Fall 2007, Spring 2008.

Mentor for student team in the Roanoke Valley Governor's School, project on "Hyper-miling" any late-model car with an OB2 connector and an iPod. Fall 2010.

Panelist for AAAS proposals, 2105.

Exhibit 1009-00093

EXHIBIT B TO THE

DECLARATION OF DR. ROBERT H. STURGES

Type of Matter: Patent
Law Firm: Reed Smith
Case Name: Vamco v. Sankyo
Services Provided: Hired by Vamco, expert report, depositions, testimony
Date: February 1991

Type of Matter: Patent
Law Firm: Buchanan Ingersoll
Case Name: N/A v. Toll Partners, Inc.
Services Provided: Hired by Toll Partners, expert report, depositions, testimony
Date: August 1992

Type of Matter: Trade Secret
Law Firm: Buchanan Ingersoll
Case Name: Hauser v. N/A
Services Provided: Hired by Hauser, expert report, depositions, testimony
Date: October 1992

Type of Matter: Patent
Law Firm: Reed Smith
Case Name: McClain v. KNI
Services Provided: Hired by KNI, expert report, depositions, demonstratives, testimony
Date: June 1994

Type of Matter: Patent
Law Firm: Buchanan Ingersoll
Case Name: Stnd Car Truck v. A. Stucki Co.
Services Provided: Hired by A. Stucki Co, expert report, depositions, demonstratives, testimony
Date: Aug 1995

Type of Matter: Patent
Law Firm: Cleary Gottlieb
Case Name: Ricoh Co v. ICMI/Nashua
Services Provided: Hired by Ricoh, expert report, depositions, testimony
Date: May 1996

Type of Matter: Patent
Law Firm: Buchanan Ingersoll
Case Name: Ductmate v. Mez
Services Provided: Hired by Ductmate, expert report, depositions, testimony
Date: May 1996

Type of Matter: Patent
Law Firm: N/A
Case Name: II-VI Corp. v. Raiskin
Disposition: Judgment in favor of II-VI
Date: Jan 1996

Type of Matter: Patent
Law Firm: Merchant & Gould
Case Name: Century v. Chevron
Services Provided: Hired by Chevron, expert report, depositions, testimony
Date: March 1996

Type of Matter: Accident
Law Firm: N/A
Case Name: Kennedy v. Shadyside Hospital
Services Provided: Hired by Shadyside Hospital, expert report, depositions
Date: Sept 1996

Type of Matter: Patent
Law Firm: Buchanan Ingersoll
Case Name: AGR v. N/A
Services Provided: Hired by Buchanan Ingersoll, expert report, depositions
Date: Sept 2001

Type of Matter: Patent
Law Firm: Buchanan Ingersoll
Case Name: Electrogrip v. MEC
Services Provided: Hired by MEC, expert report, deposition
Date: Aug 1998

Type of Matter: Patent
Law Firm: Kane Dalsimer
Case Name: Daktronics v. Trans-lux
Services Provided: Hired by Trans-lux, expert report, depositions
Date: October 1999

Type of Matter: Patent
Law Firm: Kane Dalsimer
Case Name: Kirsh v. Brother, Int'l
Services Provided: Hired by Brother Int'l, expert report, depositions, testimony
Date: June 1999

Type of Matter: Trade Secret
Law Firm: N/A, FTI Consulting
Case Name: Memtec v. Puroflow
Services Provided: Hired by Memtech, expert report, depositions, testimony
Date: February 1999

Type of Matter: Patent
Law Firm: Myers Bigel
Case Name: Tee-Lok v. MiTek
Services Provided: Hired by Tee-Lok, expert report, depositions, testimony
Date: August 1999

Type of Matter: Patent
Law Firm: Lewis Rice
Case Name: Engle v. Systemation

Services Provided: Hired by Engle, expert report, depositions, testimony
Date: 2000

Type of Matter: Patent
Law Firm: Buchanan Ingersoll
Case Name: GETS v. Wabtech
Services Provided: Hired by Wabtech, expert report, depositions, testimony
Date: May 2003

Type of Matter: Patent
Law Firm: Lewis Rice
Case Name: TruFitness v. Precor
Services Provided: Hired by TruFitness, expert report, depositions, testimony
Date: Jan 2001

Type of Matter: Patent
Law Firm: Lewis Rice
Case Name: SRAM v. AD-II
Services Provided: Hired by SRAM, expert report, depositions, testimony
Date: Jan 2002

Type of Matter: Patent
Law Firm: Pillsbury Winthrop
Case Name: Kirsch v. TABS
Services Provided: Hired by TABS, expert report, depositions, testimony
Date: Feb 2006

Type of Matter: Patent
Law Firm: Stradling Yocca
Case Name: Intuitive v. Computer Motion
Services Provided: Hired by Computer Motion, expert report, depositions, testimony
Date: May 2003

Type of Matter: Patent
Law Firm: Moss & Rocovich
Case Name: Musser v. Group7
Services Provided: Hired by Musser, expert report, depositions, testimony
Date: March 2004

Type of Matter: Patent
Law Firm: Reed Smith
Case Name: Medrad v. Liebel-Flarsheim
Services Provided: Hired by Medrad, expert report, depositions, testimony
Date: March 2005

Type of Matter: Patent
Law Firm: Buchanan Ingersoll
Case Name: Newell v. Intercrown
Services Provided: Hired by Intercrown, expert report, deposition
Date: Aug 2010

Type of Matter: Contract/Technical
Law Firm: N/A
Case Name: Morrill Motors v. Lamb Technicon
Services Provided: Hired by Lamb Technicon, expert report, depositions, testimony
Date: March 2005

Type of Matter: Patent
Law Firm: Oblon Spivak
Case Name: NPI v. Gamber-Johnson
Services Provided: Hired by Gamber-Johnson, expert report, deposition
Date: June 2006

Type of Matter: Patent
Law Firm: Myers Bigel
Case Name: Avitech v. Embrex
Services Provided: Hired by Embrex, expert report, depositions, testimony
Date: ?

Type of Matter: Patent
Law Firm: Banner & Witcoff
Case Name: Sure Bros. v. N/A
Services Provided: Hired by Sure Bros., expert report
Date: Feb 2008

Type of Matter: Patent
Law Firm: Polsinelli
Case Name: Dentsply v. Forestadent
Services Provided: Hired by Dentsply, expert report, depositions, testimony
Date: Feb 2010

Type of Matter: Patent
Law Firm: Thompson Hine
Case Name: Hyko v. Hillman
Services Provided: Hired by Hyko, expert report, depositions, testimony
Date: June 2012

Type of Matter: Patent, ITC
Law Firm: Fitzpatrick Cella
Case Name: Canon KK v. Multiple Defendants
Services Provided: Hired by Canon KK, expert report, depositions, testimony
Date: August 2012

Type of Matter: Patent
Law Firm: McDermott Will & Emory
Case Name: Lincoln Electric v. National Standard
Services Provided: Hired by National Standard, expert report, depositions, testimony
Date: July 2012

Type of Matter: Patent
Law Firm: Hayes Boone
Case Name: Imaginal v. Legget & Platt

Services Provided: Hired by Legget & Platt, expert report, depositions, testimony
Date: Aug 2012

Type of Matter: Patent
Law Firm: Orrick
Case Name: Imaginal v. Legget & Platt
Services Provided: Hired by Legget & Platt, expert report, depositions, testimony
Date: Oct 2014

Type of Matter: Patent, IPR
Law Firm: Fitzpatrick Cella
Case Name: Canon KK v. Multiple Defendants
Services Provided: Hired by Canon KK, expert report, deposition
Date: Ongoing

Type of Matter: Patent
Law Firm: Boies Schiller
Case Name: ROY-G-BIV v. ABB
Services Provided: Hired by ROY-G-BIV, expert report, depositions
Date: Sept 2014

Type of Matter: Patent
Law Firm: Beck Thomas
Case Name: Ductmate Ind. v. Famous Distr.
Services Provided: Hired by Ductmate, expert report, declarations
Date: Nov 2014

Type of Matter: Patent
Law Firm: McCarter English
Case Name: OncQue v KAZ
Services Provided: Hired by OncQue, expert report
Date: November 2015

Type of Matter: Patent
Law Firm: Dickstein Shapiro/ Blank Rome
Case Name: Daifuku v. Murata
Services Provided: Hired by Daifuku, expert report, depositions, IPR
Date: Ongoing

Type of Matter: Patent
Law Firm: Munck Wilson Mandala
Case Name: Nintendo v iLife
Services Provided: Hired by iLife, expert report, depositions
Date: Ongoing

Type of Matter: Patent
Law Firm: Greenberg Traurig
Case Name: Megdal v La-Z-Boy
Services Provided: Hired by La-Z-Boy, expert report, court testimony
Date: ongoing